1–1. The shaft is supported by a smooth thrust bearing at B and a journal bearing at C. Determine the resultant internal loadings acting on the cross section at E.

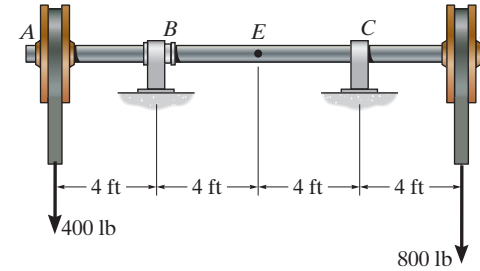

Support Reactions: We will only need to compute $\mathbf{C}_y$ by writing the moment equation of equilibrium about B with reference to the free-body diagram of the entire shaft, Fig. a.

$\circlearrowleft + \Sigma M_B = 0; \qquad C_y(8) + 400(4) - 800(12) = 0 \qquad C_y = 1000 \text{ lb}$

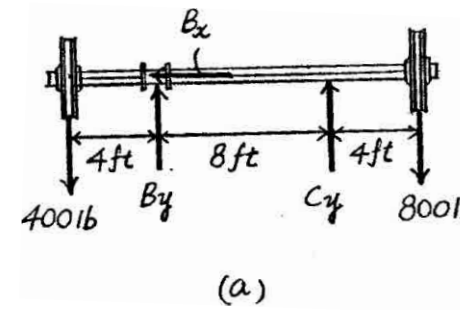

(a)

Internal Loadings: Using the result for $\mathbf{C}_y$, section DE of the shaft will be considered. Referring to the free-body diagram, Fig. b,

$\overset{+}{\rightarrow} \Sigma F_x = 0; \qquad N_E = 0$ **Ans.**

$+\uparrow \Sigma F_y = 0; \qquad V_E + 1000 - 800 = 0 \qquad V_E = -200 \text{ lb}$ **Ans.**

$\circlearrowleft + \Sigma M_E = 0; \; 1000(4) - 800(8) - M_E = 0$

$M_E = -2400 \text{ lb} \cdot \text{ft} = -2.40 \text{ kip} \cdot \text{ft}$ **Ans.**

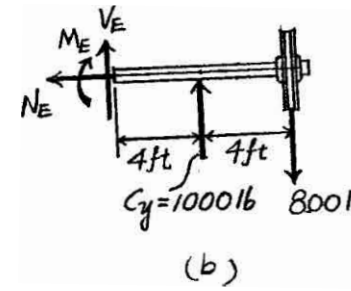

(b)

The negative signs indicates that $\mathbf{V}_E$ and $\mathbf{M}_E$ act in the opposite sense to that shown on the free-body diagram.

Ans:
$N_E = 0, V_E = -200 \text{ lb}, M_E = -2.40 \text{ kip} \cdot \text{ft}$

1–2. Determine the resultant internal normal and shear force in the member at (a) section *a–a* and (b) section *b–b*, each of which passes through point *A*. The 500-lb load is applied along the centroidal axis of the member.

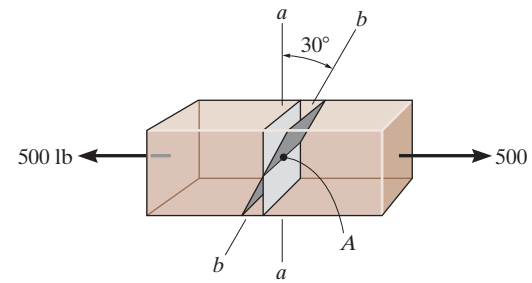

(a)

$\overset{+}{\rightarrow} \Sigma F_x = 0;$ $\quad N_a - 500 = 0$

$N_a = 500 \text{ lb}$ **Ans.**

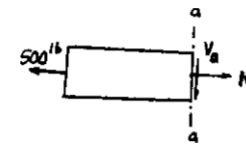

$+\downarrow \Sigma F_y = 0;$ $\quad V_a = 0$ **Ans.**

(b)

$\overset{+}{\searrow} \Sigma F_x = 0;$ $\quad N_b - 500 \cos 30° = 0$

$N_b = 433 \text{ lb}$ **Ans.**

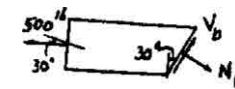

$\overset{+}{\nearrow} \Sigma F_y = 0;$ $\quad V_b - 500 \sin 30° = 0$

$V_b = 250 \text{ lb}$ **Ans.**

Ans:
$N_a = 500$ lb, $V_a = 0$,
$N_b = 433$ lb, $V_b = 250$ lb

1–3. The beam AB is fixed to the wall and has a uniform weight of 80 lb/ft. If the trolley supports a load of 1500 lb, determine the resultant internal loadings acting on the cross sections through points C and D.

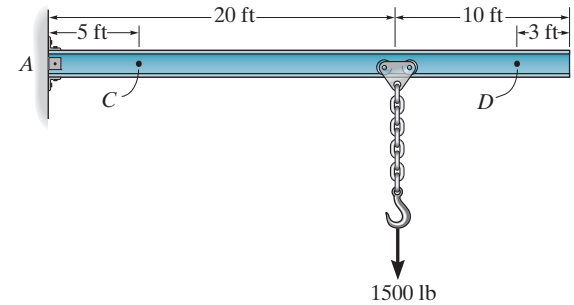

Segment BC:

$\overset{+}{\leftarrow} \Sigma F_x = 0;$ $\quad N_C = 0$ **Ans.**

$+\uparrow \Sigma F_y = 0;$ $\quad V_C - 2.0 - 1.5 = 0$

$V_C = 3.50 \text{ kip}$ **Ans.**

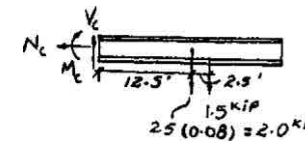

$\circlearrowleft + \Sigma M_C = 0;$ $\quad -M_C - 2(12.5) - 1.5(15) = 0$

$M_C = -47.5 \text{ kip} \cdot \text{ft}$ **Ans.**

Segment BD:

$\overset{+}{\leftarrow} \Sigma F_x = 0;$ $\quad N_D = 0$ **Ans.**

$+\uparrow \Sigma F_y = 0;$ $\quad V_D - 0.24 = 0$

$V_D = 0.240 \text{ kip}$ **Ans.**

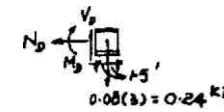

$\circlearrowleft + \Sigma M_D = 0;$ $\quad -M_D - 0.24(1.5) = 0$

$M_D = -0.360 \text{ kip} \cdot \text{ft}$ **Ans.**

Ans:
$N_C = 0, V_C = 3.50 \text{ kip}, M_C = -47.5 \text{ kip} \cdot \text{ft},$
$N_D = 0, V_D = 0.240 \text{ kip}, M_D = -0.360 \text{ kip} \cdot \text{ft}$

***1–4.** The shaft is supported by a smooth thrust bearing at A and a smooth journal bearing at B. Determine the resultant internal loadings acting on the cross section at C.

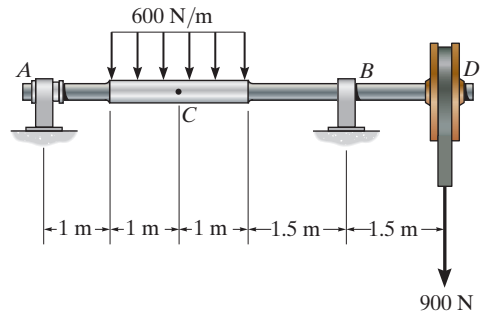

Support Reactions: We will only need to compute $\mathbf{B}_y$ by writing the moment equation of equilibrium about A with reference to the free-body diagram of the entire shaft, Fig. *a*.

$$\circlearrowleft + \Sigma M_A = 0; \quad B_y(4.5) - 600(2)(2) - 900(6) = 0 \quad B_y = 1733.33 \text{ N}$$

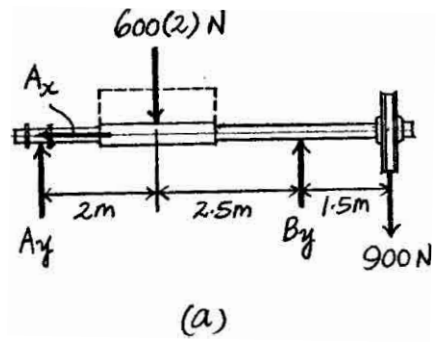

Internal Loadings: Using the result of $\mathbf{B}_y$, section CD of the shaft will be considered. Referring to the free-body diagram of this part, Fig. *b*,

$$\overset{+}{\leftarrow} \Sigma F_x = 0; \quad N_C = 0 \qquad \textbf{Ans.}$$

$$+\uparrow \Sigma F_y = 0; \quad V_C - 600(1) + 1733.33 - 900 = 0 \quad V_C = -233 \text{ N} \qquad \textbf{Ans.}$$

$$\circlearrowleft + \Sigma M_C = 0; \quad 1733.33(2.5) - 600(1)(0.5) - 900(4) - M_C = 0$$

$$M_C = 433 \text{ N} \cdot \text{m} \qquad \textbf{Ans.}$$

The negative sign indicates that $\mathbf{V}_C$ act in the opposite sense to that shown on the free-body diagram.

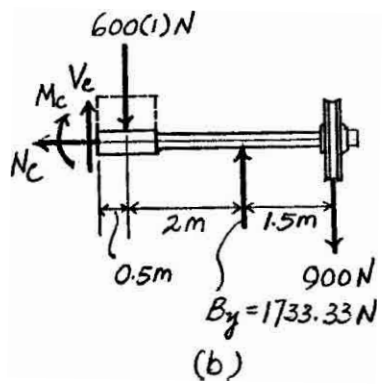

1–5. Determine the resultant internal loadings in the beam at cross sections through points D and E. Point E is just to the right of the 3-kip load.

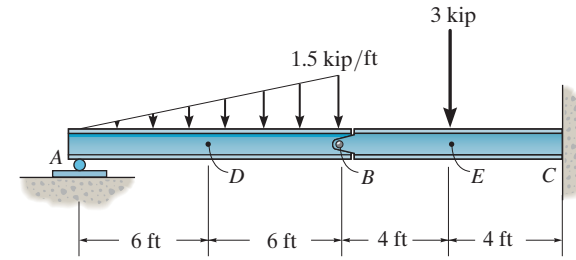

Support Reactions: For member AB

$\circlearrowleft + \Sigma M_B = 0; \qquad 9.00(4) - A_y(12) = 0 \qquad A_y = 3.00 \text{ kip}$

$\overset{+}{\rightarrow} \Sigma F_x = 0; \qquad B_x = 0$

$+\uparrow \Sigma F_y = 0; \qquad B_y + 3.00 - 9.00 = 0 \qquad B_y = 6.00 \text{ kip}$

Equations of Equilibrium: For point D

$\overset{+}{\rightarrow} \Sigma F_x = 0; \qquad N_D = 0$ **Ans.**

$+\uparrow \Sigma F_y = 0; \qquad 3.00 - 2.25 - V_D = 0$

$V_D = 0.750 \text{ kip}$ **Ans.**

$\circlearrowleft + \Sigma M_D = 0; \qquad M_D + 2.25(2) - 3.00(6) = 0$

$M_D = 13.5 \text{ kip} \cdot \text{ft}$ **Ans.**

Equations of Equilibrium: For point E

$\overset{+}{\rightarrow} \Sigma F_x = 0; \qquad N_E = 0$ **Ans.**

$+\uparrow \Sigma F_y = 0; \qquad -6.00 - 3 - V_E = 0$

$V_E = -9.00 \text{ kip}$ **Ans.**

$\circlearrowleft + \Sigma M_E = 0; \qquad M_E + 6.00(4) = 0$

$M_E = -24.0 \text{ kip} \cdot \text{ft}$ **Ans.**

Negative signs indicate that M_E and V_E act in the opposite direction to that shown on FBD.

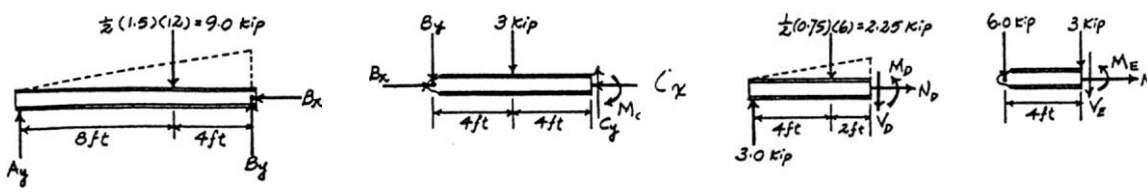

Ans:
$N_D = 0,\ V_D = 0.750 \text{ kip},\ M_D = 13.5 \text{ kip} \cdot \text{ft},$
$N_E = 0,\ V_E = -9.00 \text{ kip},\ M_E = -24.0 \text{ kip} \cdot \text{ft}$

1–6. Determine the normal force, shear force, and moment at a section through point C. Take $P = 8$ kN.

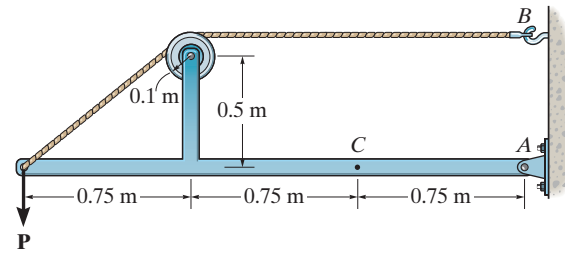

Support Reactions:

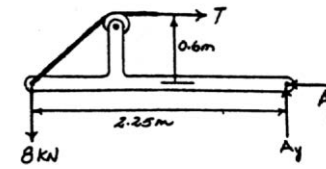

$\circlearrowleft + \Sigma M_A = 0; \quad 8(2.25) - T(0.6) = 0 \quad T = 30.0 \text{ kN}$

$\overset{+}{\rightarrow} \Sigma F_x = 0; \quad 30.0 - A_x = 0 \quad A_x = 30.0 \text{ kN}$

$+\uparrow \Sigma F_y = 0; \quad A_y - 8 = 0 \quad A_y = 8.00 \text{ kN}$

Equations of Equilibrium: For point C

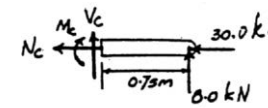

$\overset{+}{\rightarrow} \Sigma F_x = 0; \quad -N_C - 30.0 = 0$

$N_C = -30.0 \text{ kN}$ **Ans.**

$+\uparrow \Sigma F_y = 0; \quad V_C + 8.00 = 0$

$V_C = -8.00 \text{ kN}$ **Ans.**

$\circlearrowleft + \Sigma M_C = 0; \quad 8.00(0.75) - M_C = 0$

$M_C = 6.00 \text{ kN} \cdot \text{m}$ **Ans.**

Negative signs indicate that N_C and V_C act in the opposite direction to that shown on FBD.

Ans:
$N_C = -30.0$ kN, $V_C = -8.00$ kN,
$M_C = 6.00$ kN · m

1–7. The cable will fail when subjected to a tension of 2 kN. Determine the largest vertical load P the frame will support and calculate the internal normal force, shear force, and moment at the cross section through point C for this loading.

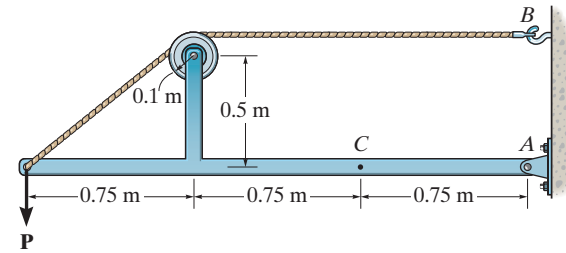

Support Reactions:

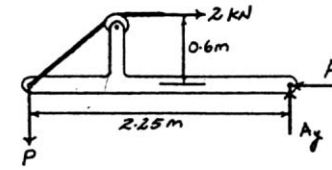

$\circlearrowleft + \Sigma M_A = 0; \qquad P(2.25) - 2(0.6) = 0$

$$P = 0.5333 \text{ kN} = 0.533 \text{ kN} \qquad \textbf{Ans.}$$

$\overset{+}{\rightarrow} \Sigma F_x = 0; \qquad 2 - A_x = 0 \qquad A_x = 2.00 \text{ kN}$

$+\uparrow \Sigma F_y = 0; \qquad A_y - 0.5333 = 0 \qquad A_y = 0.5333 \text{ kN}$

Equations of Equilibrium: For point C

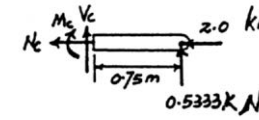

$\overset{+}{\rightarrow} \Sigma F_x = 0; \qquad -N_C - 2.00 = 0$

$$N_C = -2.00 \text{ kN} \qquad \textbf{Ans.}$$

$+\uparrow \Sigma F_y = 0; \qquad V_C + 0.5333 = 0$

$$V_C = -0.533 \text{ kN} \qquad \textbf{Ans.}$$

$\circlearrowleft + \Sigma M_C = 0; \qquad 0.5333(0.75) - M_C = 0$

$$M_C = 0.400 \text{ kN} \cdot \text{m} \qquad \textbf{Ans.}$$

Negative signs indicate that N_C and V_C act in the opposite direction to that shown on FBD.

Ans:
$P = 0.533$ kN, $N_C = -2.00$ kN, $V_C = -0.533$ kN, $M_C = 0.400$ kN · m

***1–8.** Determine the resultant internal loadings on the cross section through point C. Assume the reactions at the supports A and B are vertical.

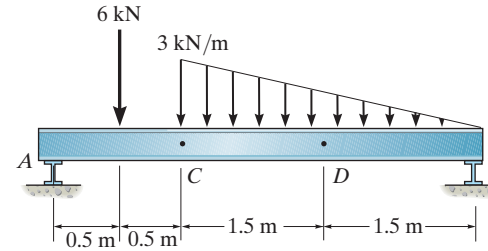

Referring to the FBD of the entire beam, Fig. *a*,

$\circlearrowleft + \Sigma M_B = 0; \qquad -A_y(4) + 6(3.5) + \frac{1}{2}(3)(3)(2) = 0 \qquad A_y = 7.50 \text{ kN}$

Referring to the FBD of this segment, Fig. *b*,

$\overset{+}{\rightarrow} \Sigma F_x = 0; \qquad N_C = 0$ **Ans.**

$+\uparrow \Sigma F_y = 0; \qquad 7.50 - 6 - V_C = 0 \qquad V_C = 1.50 \text{ kN}$ **Ans.**

$\circlearrowleft + \Sigma M_C = 0; \qquad M_C + 6(0.5) - 7.5(1) = 0 \qquad M_C = 4.50 \text{ kN} \cdot \text{m}$ **Ans.**

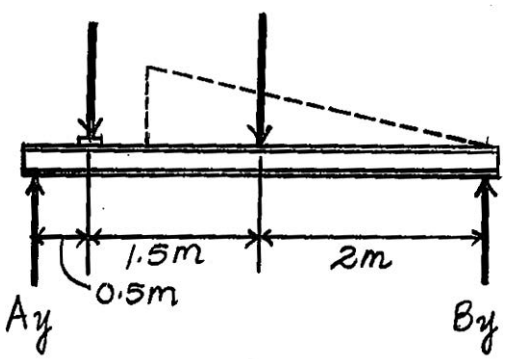

(a)

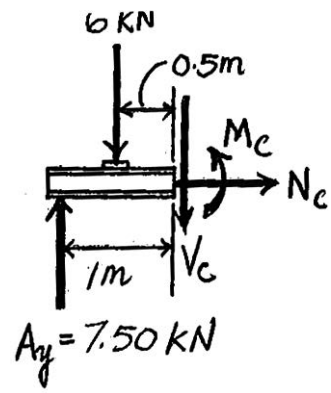

(b)

1–9. Determine the resultant internal loadings on the cross section through point D. Assume the reactions at the supports A and B are vertical.

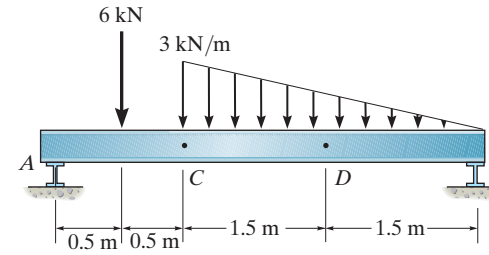

Referring to the FBD of the entire beam, Fig. a,

$$\circlearrowleft +\Sigma M_A = 0; \qquad B_y(4) - 6(0.5) - \frac{1}{2}(3)(3)(2) = 0 \qquad B_y = 3.00 \text{ kN}$$

Referring to the FBD of this segment, Fig. b,

$$\xrightarrow{+} \Sigma F_x = 0; \qquad N_D = 0 \qquad \textbf{Ans.}$$

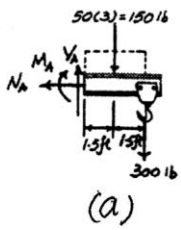

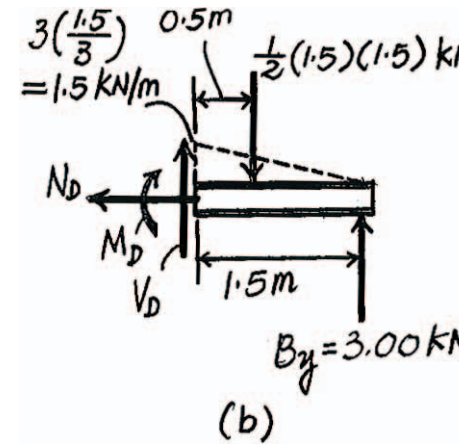

$$+\uparrow \Sigma F_y = 0; \qquad V_D - \frac{1}{2}(1.5)(1.5) + 3.00 = 0 \qquad V_D = -1.875 \text{ kN} \qquad \textbf{Ans.}$$

$$\circlearrowleft +\Sigma M_D = 0; \quad 3.00(1.5) - \frac{1}{2}(1.5)(1.5)(0.5) - M_D = 0 \quad M_D = 3.9375 \text{ kN}\cdot\text{m}$$

$$= 3.94 \text{ kN}\cdot\text{m} \qquad \textbf{Ans.}$$

Ans:
$N_D = 0, V_D = -1.875$ kN,
$M_D = 3.94$ kN · m

1–10. The boom DF of the jib crane and the column DE have a uniform weight of 50 lb/ft. If the hoist and load weigh 300 lb, determine the resultant internal loadings in the crane on cross sections through points A, B, and C.

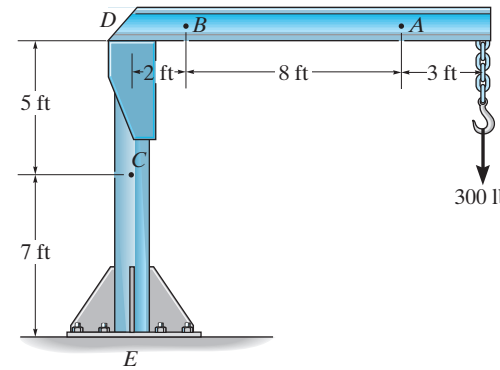

Equations of Equilibrium: For point A

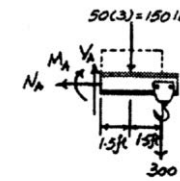

$\overset{+}{\leftarrow} \Sigma F_x = 0;$ $\quad N_A = 0$ **Ans.**

$+\uparrow \Sigma F_y = 0;$ $\quad V_A - 150 - 300 = 0$

$V_A = 450 \text{ lb}$ **Ans.**

$\circlearrowleft + \Sigma M_A = 0;$ $\quad -M_A - 150(1.5) - 300(3) = 0$

$M_A = -1125 \text{ lb} \cdot \text{ft} = -1.125 \text{ kip} \cdot \text{ft}$ **Ans.**

Negative sign indicates that M_A acts in the opposite direction to that shown on FBD.

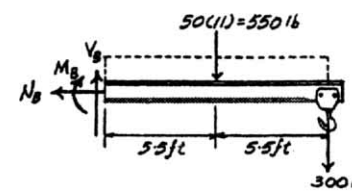

Equations of Equilibrium: For point B

$\overset{+}{\leftarrow} \Sigma F_x = 0;$ $\quad N_B = 0$ **Ans.**

$+\uparrow \Sigma F_y = 0;$ $\quad V_B - 550 - 300 = 0$

$V_B = 850 \text{ lb}$ **Ans.**

$\circlearrowleft + \Sigma M_B = 0;$ $\quad -M_B - 550(5.5) - 300(11) = 0$

$M_B = -6325 \text{ lb} \cdot \text{ft} = -6.325 \text{ kip} \cdot \text{ft}$ **Ans.**

Negative sign indicates that M_B acts in the opposite direction to that shown on FBD.

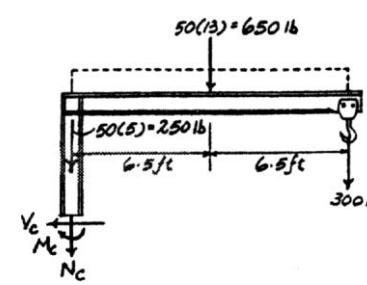

Equations of Equilibrium: For point C

$\overset{+}{\leftarrow} \Sigma F_x = 0;$ $\quad V_C = 0$ **Ans.**

$+\uparrow \Sigma F_y = 0;$ $\quad -N_C - 250 - 650 - 300 = 0$

$N_C = -1200 \text{ lb} = -1.20 \text{ kip}$ **Ans.**

$\circlearrowleft + \Sigma M_C = 0;$ $\quad -M_C - 650(6.5) - 300(13) = 0$

$M_C = -8125 \text{ lb} \cdot \text{ft} = -8.125 \text{ kip} \cdot \text{ft}$ **Ans.**

Negative signs indicate that N_C and M_C act in the opposite direction to that shown on FBD.

Ans:
$N_A = 0$, $V_A = 450$ lb, $M_A = -1.125$ kip · ft,
$N_B = 0$, $V_B = 850$ lb, $M_B = -6.325$ kip · ft,
$V_C = 0$, $N_C = -1.20$ kip, $M_C = -8.125$ kip · ft

1–11. The forearm and biceps support the 2-kg load at A. If C can be assumed as a pin support, determine the resultant internal loadings acting on the cross section of the bone of the forearm at E. The biceps pulls on the bone along BD.

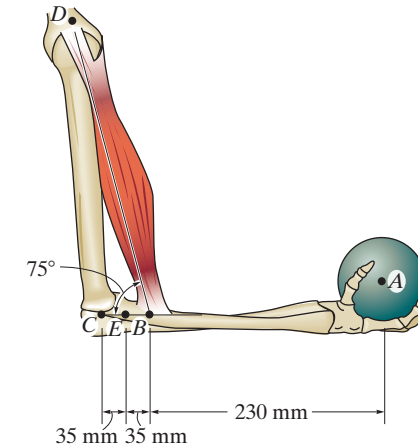

Support Reactions: In this case, all the support reactions will be completed. Referring to the free-body diagram of the forearm, Fig. *a*,

$\circlearrowleft + \Sigma M_C = 0;$ $\quad F_{BD} \sin 75°(0.07) - 2(9.81)(0.3) = 0$ $\quad F_{BD} = 87.05 \text{ N}$

$\xrightarrow{+} \Sigma F_x = 0;$ $\quad C_x - 87.05 \cos 75° = 0$ $\quad C_x = 22.53 \text{ N}$

$+\uparrow \Sigma F_y = 0;$ $\quad 87.05 \sin 75° - 2(9.81) - C_y = 0$ $\quad C_y = 64.47 \text{ N}$

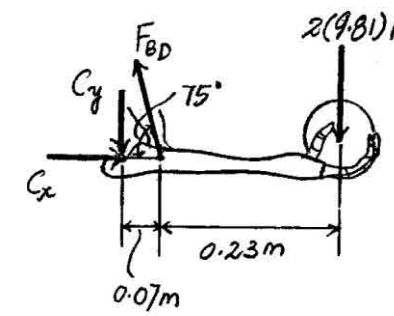

(a)

Internal Loadings: Using the results of $\mathbf{C}_x$ and $\mathbf{C}_y$, section CE of the forearm will be considered. Referring to the free-body diagram of this part shown in Fig. *b*,

$\xrightarrow{+} \Sigma F_x = 0;$ $\quad N_E + 22.53 = 0$ $\quad N_E = -22.5 \text{ N}$ **Ans.**

$+\uparrow \Sigma F_y = 0;$ $\quad -V_E - 64.47 = 0$ $\quad V_E = -64.5 \text{ N}$ **Ans.**

$\circlearrowleft + \Sigma M_E = 0;$ $\quad M_E + 64.47(0.035) = 0$ $\quad M_E = -2.26 \text{ N} \cdot \text{m}$ **Ans.**

The negative signs indicate that $\mathbf{N}_E$, $\mathbf{V}_E$ and $\mathbf{M}_E$ act in the opposite sense to that shown on the free-body diagram.

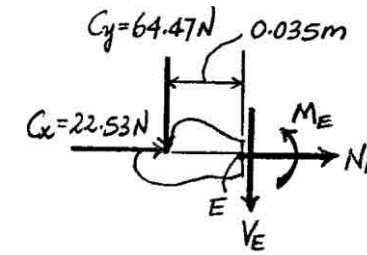

(b)

Ans:
$N_E = -22.5 \text{ N}, V_E = -64.5 \text{ N}, M_E = -2.26 \text{ N} \cdot \text{m}$

***1–12.** The serving tray T used on an airplane is supported on *each side* by an arm. The tray is pin connected to the arm at A, and at B there is a smooth pin. (The pin can move within the slot in the arms to permit folding the tray against the front passenger seat when not in use.) Determine the resultant internal loadings acting on the cross section of the arm through point C when the tray arm supports the loads shown.

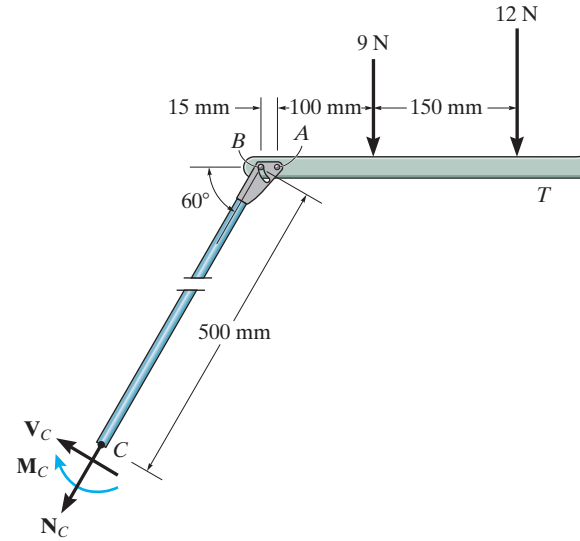

$\swarrow + \Sigma F_x = 0;\quad N_C + 9\cos 30° + 12\cos 30° = 0;\qquad N_C = -18.2\text{ N}$ **Ans.**

$\nwarrow + \Sigma F_y = 0;\quad V_C - 9\sin 30° - 12\sin 30° = 0;\qquad V_C = 10.5\text{ N}$ **Ans.**

$\circlearrowleft + \Sigma M_C = 0;\quad -M_C - 9(0.5\cos 60° + 0.115) - 12(0.5\cos 60° + 0.265) = 0$

$M_C = -9.46\text{ N}\cdot\text{m}$ **Ans.**

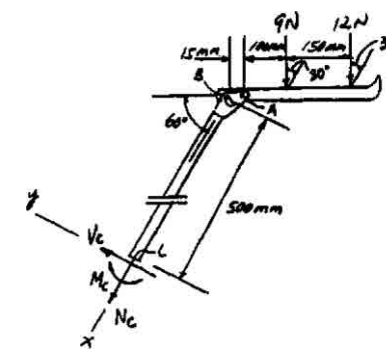

1–13. The blade of the hacksaw is subjected to a pretension force of $F = 100$ N. Determine the resultant internal loadings acting on section *a–a* that passes through point *D*.

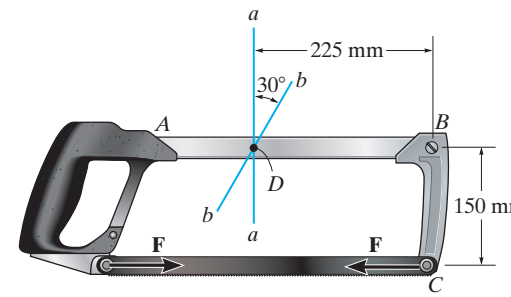

Internal Loadings: Referring to the free-body diagram of the section of the hacksaw shown in Fig. *a*,

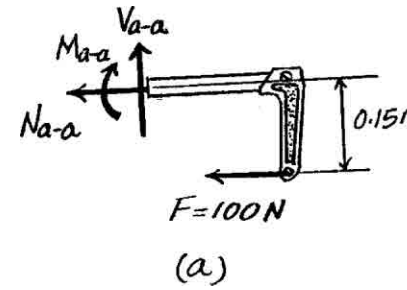

$\overset{+}{\leftarrow} \Sigma F_x = 0;$ $\quad N_{a-a} + 100 = 0$ $\quad N_{a-a} = -100$ N **Ans.**

$+\uparrow \Sigma F_y = 0;$ $\quad V_{a-a} = 0$ **Ans.**

$\circlearrowleft + \Sigma M_D = 0;$ $\quad -M_{a-a} - 100(0.15) = 0$ $\quad M_{a-a} = -15$ N · m **Ans.**

The negative sign indicates that $\mathbf{N}_{a-a}$ and $\mathbf{M}_{a-a}$ act in the opposite sense to that shown on the free-body diagram.

Ans:
$N_{a-a} = -100$ N, $V_{a-a} = 0$, $M_{a-a} = -15$ N · m

1–14. The blade of the hacksaw is subjected to a pretension force of $F = 100$ N. Determine the resultant internal loadings acting on section b–b that passes through point D.

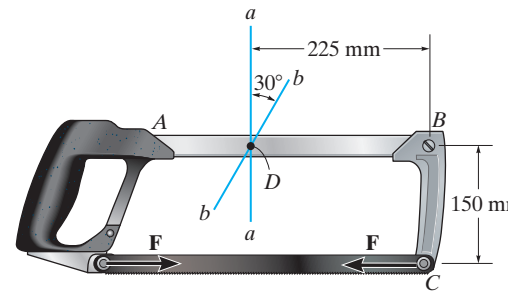

Internal Loadings: Referring to the free-body diagram of the section of the hacksaw shown in Fig. *a*,

$\Sigma F_{x'} = 0;$ $\quad N_{b-b} + 100 \cos 30° = 0$ $\quad N_{b-b} = -86.6$ N **Ans.**

$\Sigma F_{y'} = 0;$ $\quad V_{b-b} - 100 \sin 30° = 0$ $\quad V_{b-b} = 50$ N **Ans.**

$\circlearrowleft + \Sigma M_D = 0;$ $\quad -M_{b-b} - 100(0.15) = 0$ $\quad M_{b-b} = -15$ N · m **Ans.**

The negative sign indicates that $\mathbf{N}_{b-b}$ and $\mathbf{M}_{b-b}$ act in the opposite sense to that shown on the free-body diagram.

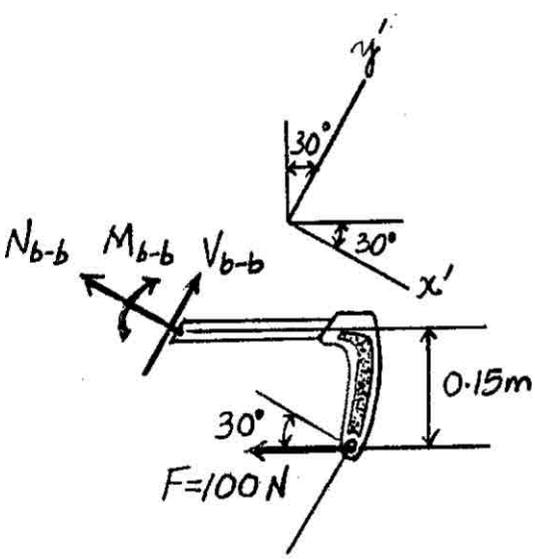

(a)

Ans:
$N_{b-b} = -86.6$ N, $V_{b-b} = 50$ N,
$M_{b-b} = -15$ N · m

1–15. A 150-lb bucket is suspended from a cable on the wooden frame. Determine the resultant internal loadings on the cross section at D.

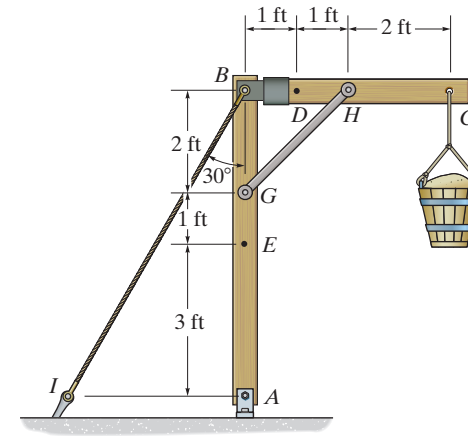

Support Reactions: We will only need to compute $\mathbf{B}_x$, $\mathbf{B}_y$, and $\mathbf{F}_{GH}$. Referring to the free-body diagram of member BC, Fig. a,

$\circlearrowleft + \Sigma M_B = 0$: $\quad F_{GH} \sin 45°(2) - 150(4) = 0 \quad F_{GH} = 424.26$ lb

$\overset{+}{\rightarrow} \Sigma F_x = 0$; $\quad 424.26 \cos 45° - B_x = 0 \quad B_x = 300$ lb

$+\uparrow \Sigma F_y = 0$; $\quad 424.26 \sin 45° - 150 - B_y = 0 \quad B_y = 150$ lb

Internal Loadings: Using the results of $\mathbf{B}_x$ and $\mathbf{B}_y$, section BD of member BC will be considered. Referring to the free-body diagram of this part shown in Fig. b,

$\overset{+}{\rightarrow} \Sigma F_x = 0$; $\quad N_D - 300 = 0 \quad N_D = 300$ lb **Ans.**

$+\uparrow \Sigma F_y = 0$; $\quad -V_D - 150 = 0 \quad V_D = -150$ lb **Ans.**

$\circlearrowleft + \Sigma M_D = 0$; $\quad 150(1) + M_D = 0 \quad M_D = -150$ lb · ft **Ans.**

The negative signs indicates that $\mathbf{V}_D$ and $\mathbf{M}_D$ act in the opposite sense to that shown on the free-body diagram.

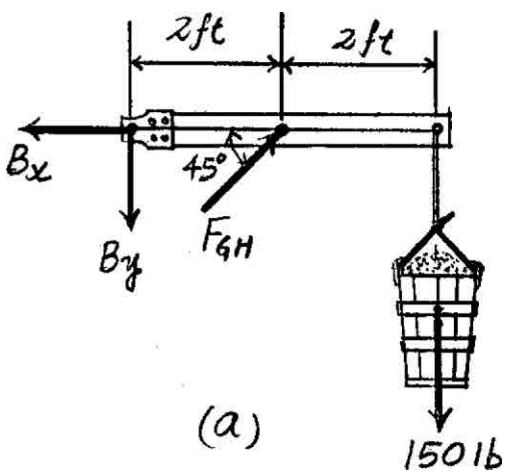

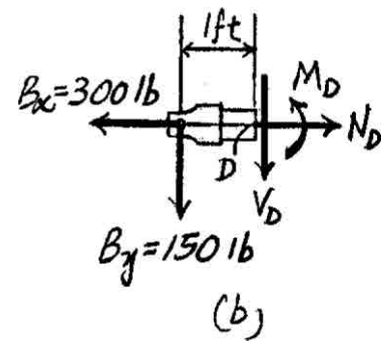

Ans:
$N_D = 300$ lb, $V_D = -150$ lb, $M_D = -150$ lb · ft

***1–16.** A 150-lb bucket is suspended from a cable on the wooden frame. Determine the resultant internal loadings acting on the cross section at E.

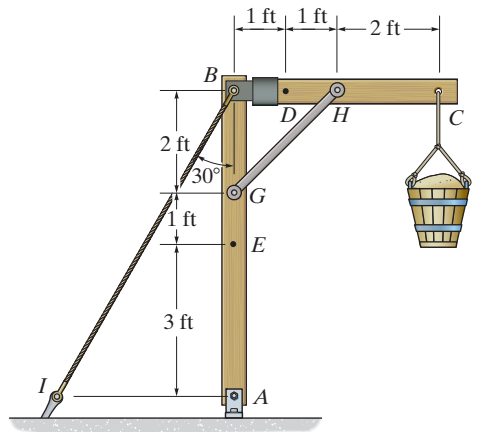

Support Reactions: We will only need to compute $\mathbf{A}_x$, $\mathbf{A}_y$, and $\mathbf{F}_{BI}$. Referring to the free-body diagram of the frame, Fig. *a*,

$\circlearrowleft + \Sigma M_A = 0;$ $\quad F_{BI} \sin 30°(6) - 150(4) = 0$ $\quad F_{BI} = 200 \text{ lb}$

$\overset{+}{\rightarrow} \Sigma F_x = 0;$ $\quad A_x - 200 \sin 30° = 0$ $\quad A_x = 100 \text{ lb}$

$+\uparrow \Sigma F_y = 0;$ $\quad A_y - 200 \cos 30° - 150 = 0$ $\quad A_y = 323.21 \text{ lb}$

Internal Loadings: Using the results of $\mathbf{A}_x$ and $\mathbf{A}_y$, section AE of member AB will be considered. Referring to the free-body diagram of this part shown in Fig. *b*,

$\overset{+}{\rightarrow} \Sigma F_x = 0;$ $\quad N_E + 323.21 = 0$ $\quad N_E = -323 \text{ lb}$ **Ans.**

$+\uparrow \Sigma F_y = 0;$ $\quad 100 - V_E = 0$ $\quad V_E = 100 \text{ lb}$ **Ans.**

$\circlearrowleft + \Sigma M_D = 0;$ $\quad 100(3) - M_E = 0$ $\quad M_E = 300 \text{ lb} \cdot \text{ft}$ **Ans.**

The negative sign indicates that $\mathbf{N}_E$ acts in the opposite sense to that shown on the free-body diagram.

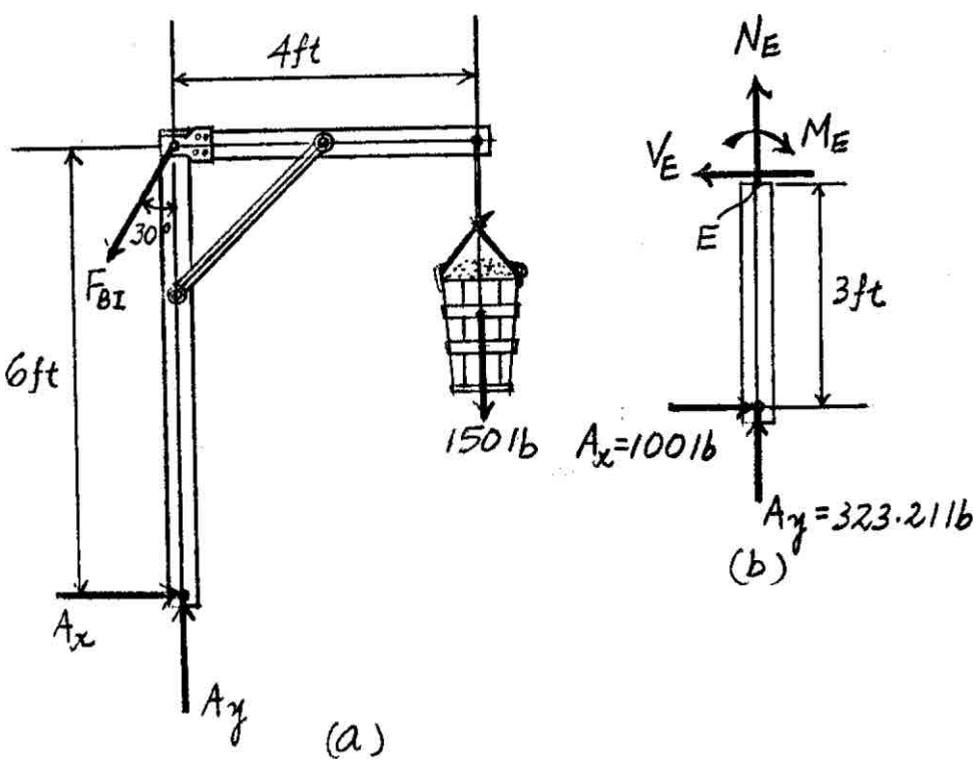

1–17. Determine resultant internal loadings acting on section *a–a* and section *b–b*. Each section passes through the centerline at point *C*.

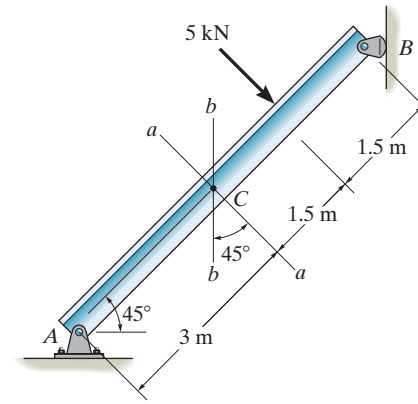

Referring to the FBD of the entire beam, Fig. *a*,

$\circlearrowleft + \Sigma M_A = 0; \quad N_B \sin 45°(6) - 5(4.5) = 0 \quad N_B = 5.303 \text{ kN}$

Referring to the FBD of this segment (section *a–a*), Fig. *b*,

$+\swarrow \Sigma F_{x'} = 0; \quad N_{a-a} + 5.303 \cos 45° = 0 \quad N_{a-a} = -3.75 \text{ kN}$ **Ans.**

$+\nwarrow \Sigma F_{y'} = 0; \quad V_{a-a} + 5.303 \sin 45° - 5 = 0 \quad V_{a-a} = 1.25 \text{ kN}$ **Ans.**

$\circlearrowleft + \Sigma M_C = 0; \quad 5.303 \sin 45°(3) - 5(1.5) - M_{a-a} = 0 \quad M_{a-a} = 3.75 \text{ kN} \cdot \text{m}$ **Ans.**

Referring to the FBD (section *b–b*) in Fig. *c*,

$\overset{+}{\leftarrow} \Sigma F_x = 0; \quad N_{b-b} - 5 \cos 45° + 5.303 = 0 \quad N_{b-b} = -1.768 \text{ kN}$

$= -1.77 \text{ kN}$ **Ans.**

$+\uparrow \Sigma F_y = 0; \quad V_{b-b} - 5 \sin 45° = 0 \quad V_{b-b} = 3.536 \text{ kN} = 3.54 \text{ kN}$ **Ans.**

$\circlearrowleft + \Sigma M_C = 0; \quad 5.303 \sin 45° (3) - 5(1.5) - M_{b-b} = 0$

$M_{b-b} = 3.75 \text{ kN} \cdot \text{m}$ **Ans.**

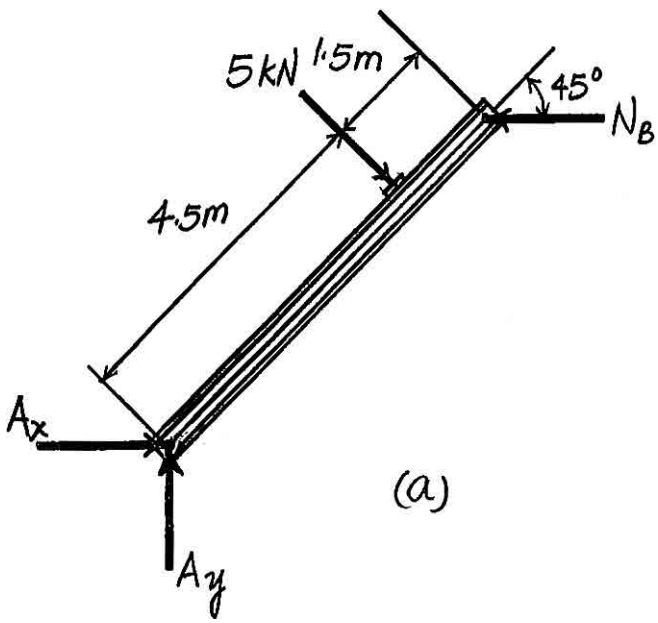

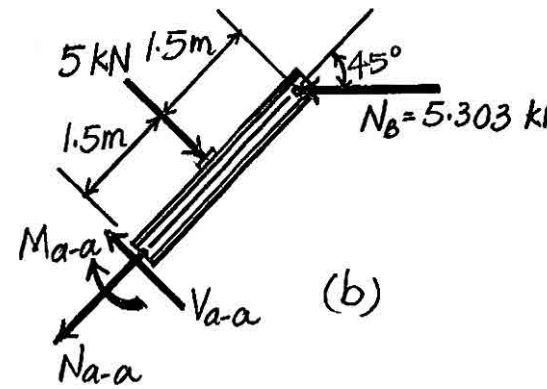

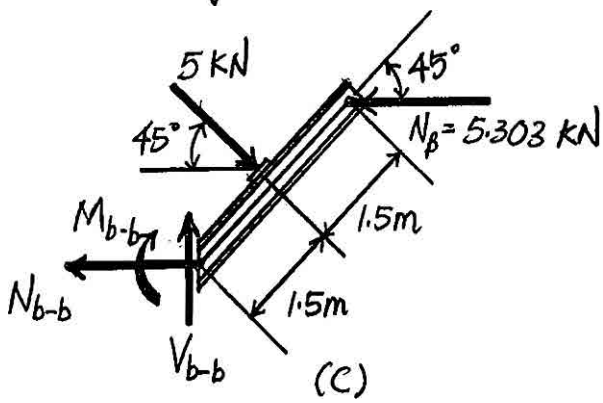

Ans:
$N_{a-a} = -3.75$ kN, $V_{a-a} = 1.25$ kN,
$M_{a-a} = 3.75$ kN · m, $N_{b-b} = -1.77$ kN,
$V_{b-b} = 3.54$ kN · m, $M_{b-b} = 3.75$ kN · m

1–18. The bolt shank is subjected to a tension of 80 lb. Determine the resultant internal loadings acting on the cross section at point C.

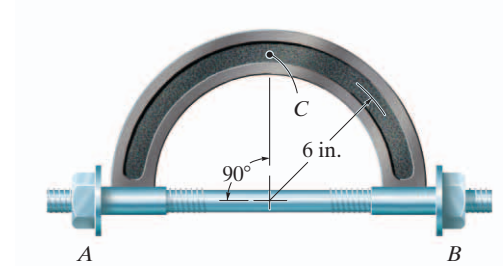

Segment AC:

$\overset{+}{\rightarrow} \Sigma F_x = 0; \quad N_C + 80 = 0; \quad N_C = -80 \text{ lb}$ **Ans.**

$+\uparrow \Sigma F_y = 0; \quad V_C = 0$ **Ans.**

$\circlearrowleft + \Sigma M_C = 0; \quad M_C + 80(6) = 0; \quad M_C = -480 \text{ lb} \cdot \text{in.}$ **Ans.**

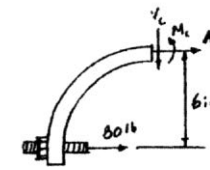

Ans:
$N_C = -80 \text{ lb}, V_C = 0, M_C = -480 \text{ lb} \cdot \text{in.}$

1–19. Determine the resultant internal loadings acting on the cross section through point C. Assume the reactions at the supports A and B are vertical.

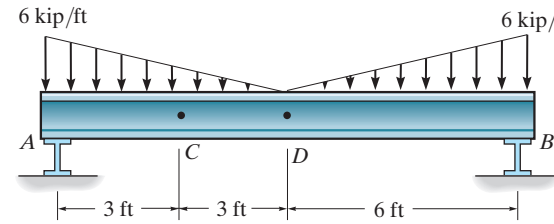

Referring to the FBD of the entire beam, Fig. *a*,

$$\circlearrowleft + \Sigma M_B = 0; \quad \frac{1}{2}(6)(6)(2) + \frac{1}{2}(6)(6)(10) - A_y(12) = 0 \quad A_y = 18.0 \text{ kip}$$

Referring to the FBD of this segment, Fig. *b*,

$$\overset{+}{\rightarrow} \Sigma F_x = 0; \qquad N_C = 0 \qquad \textbf{Ans.}$$

$$+\uparrow \Sigma F_y = 0; \qquad 18.0 - \frac{1}{2}(3)(3) - (3)(3) - V_C = 0 \qquad V_C = 4.50 \text{ kip} \qquad \textbf{Ans.}$$

$$\circlearrowleft + \Sigma M_C = 0; \qquad M_C + (3)(3)(1.5) + \frac{1}{2}(3)(3)(2) - 18.0(3) = 0$$

$$M_C = 31.5 \text{ kip} \cdot \text{ft} \qquad \textbf{Ans.}$$

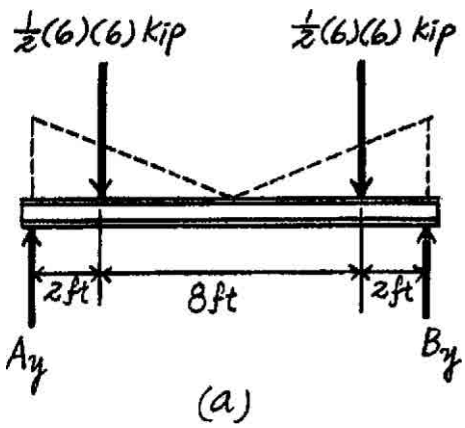

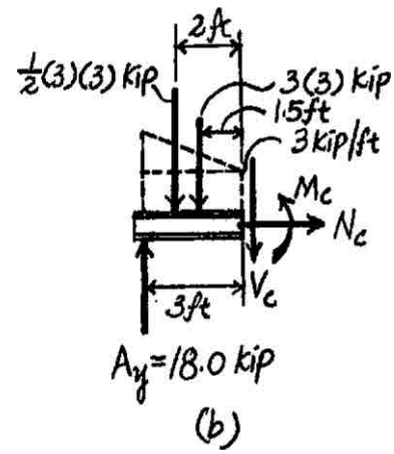

Ans:
$N_C = 0$, $V_C = 4.50$ kip, $M_C = 31.5$ kip · ft

***1–20.** Determine the resultant internal loadings acting on the cross section through point D. Assume the reactions at the supports A and B are vertical.

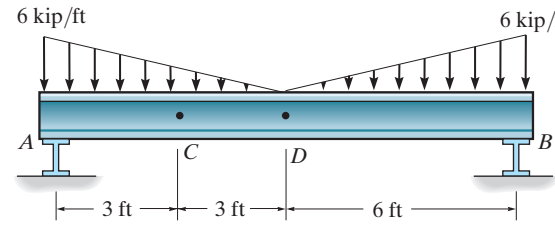

Referring to the FBD of the entire beam, Fig. *a*,

$$\circlearrowleft + \Sigma M_B = 0; \quad \frac{1}{2}(6)(6)(2) + \frac{1}{2}(6)(6)(10) - A_y(12) = 0 \quad A_y = 18.0 \text{ kip}$$

Referring to the FBD of this segment, Fig. *b*,

$$\overset{+}{\rightarrow} \Sigma F_x = 0; \qquad N_D = 0 \qquad \textbf{Ans.}$$

$$+\uparrow \Sigma F_y = 0; \qquad 18.0 - \frac{1}{2}(6)(6) - V_D = 0 \qquad V_D = 0 \qquad \textbf{Ans.}$$

$$\circlearrowleft + \Sigma M_A = 0; \qquad M_D - 18.0\,(2) = 0 \qquad M_D = 36.0 \text{ kip} \cdot \text{ft} \qquad \textbf{Ans.}$$

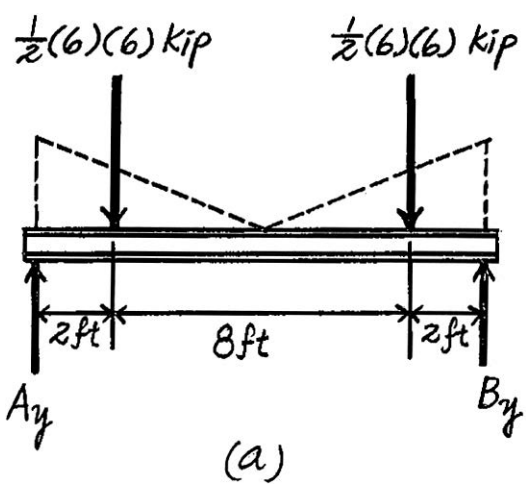

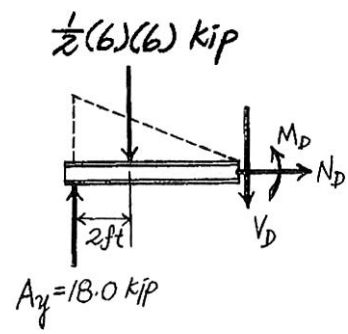

1–21. The forged steel clamp exerts a force of $F = 900$ N on the wooden block. Determine the resultant internal loadings acting on section a–a passing through point A.

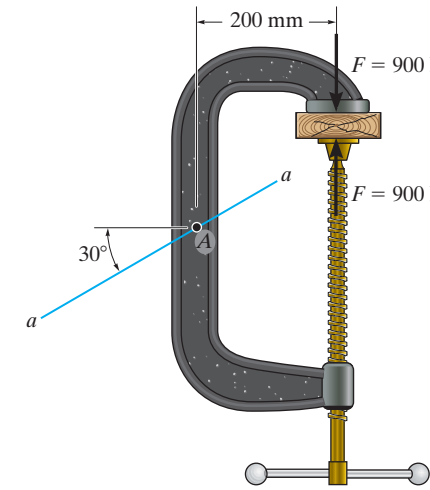

Internal Loadings: Referring to the free-body diagram of the section of the clamp shown in Fig. a,

$\Sigma F_{y'} = 0;$ $\quad 900 \cos 30° - N_{a-a} = 0$ $\quad N_{a-a} = 779$ N **Ans.**

$\Sigma F_{x'} = 0;$ $\quad V_{a-a} - 900 \sin 30° = 0$ $\quad V_{a-a} = 450$ N **Ans.**

$\circlearrowleft + \Sigma M_A = 0;$ $\quad 900(0.2) - M_{a-a} = 0$ $\quad M_{a-a} = 180$ N · m **Ans.**

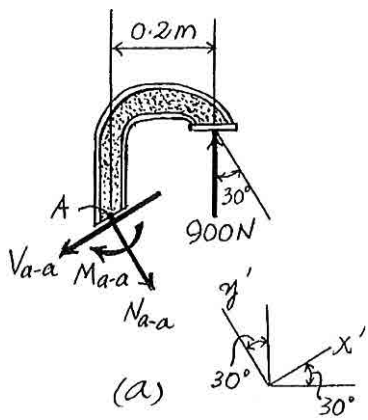

Ans:
$N_{a-a} = 779$ N, $V_{a-a} = 450$ N, $M_{a-a} = 180$ N · m:

1–22. The metal stud punch is subjected to a force of 120 N on the handle. Determine the magnitude of the reactive force at the pin A and in the short link BC. Also, determine the internal resultant loadings acting on the cross section passing through the handle arm at D.

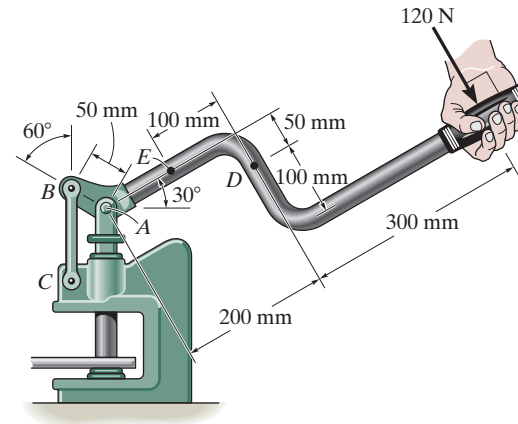

Member:

$\circlearrowleft + \Sigma M_A = 0;$ $\quad F_{BC} \cos 30°(50) - 120(500) = 0$

$F_{BC} = 1385.6 \text{ N} = 1.39 \text{ kN}$ **Ans.**

$+\uparrow \Sigma F_y = 0;$ $\quad A_y - 1385.6 - 120 \cos 30° = 0$

$A_y = 1489.56 \text{ N}$

$\overset{+}{\leftarrow} \Sigma F_x = 0;$ $\quad A_x - 120 \sin 30° = 0;$ $\quad A_x = 60 \text{ N}$

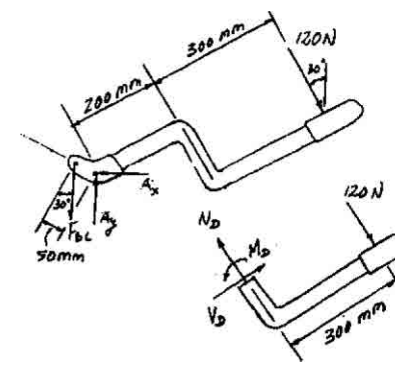

$F_A = \sqrt{1489.56^2 + 60^2}$

$= 1491 \text{ N} = 1.49 \text{ kN}$ **Ans.**

Segment:

$\overset{+}{\nwarrow} \Sigma F_{x'} = 0;$ $\quad N_D - 120 = 0$

$N_D = 120 \text{ N}$ **Ans.**

$\overset{+}{\nearrow} \Sigma F_{y'} = 0;$ $\quad V_D = 0$ **Ans.**

$\circlearrowleft + \Sigma M_D = 0;$ $\quad M_D - 120(0.3) = 0$

$M_D = 36.0 \text{ N} \cdot \text{m}$ **Ans.**

Ans:
$F_{BC} = 1.39$ kN, $F_A = 1.49$ kN, $N_D = 120$ N, $V_D = 0$, $M_D = 36.0$ N · m

1–23. Solve Prob. 1–22 for the resultant internal loadings acting on the cross section passing through the handle arm at E and at a cross section of the short link BC.

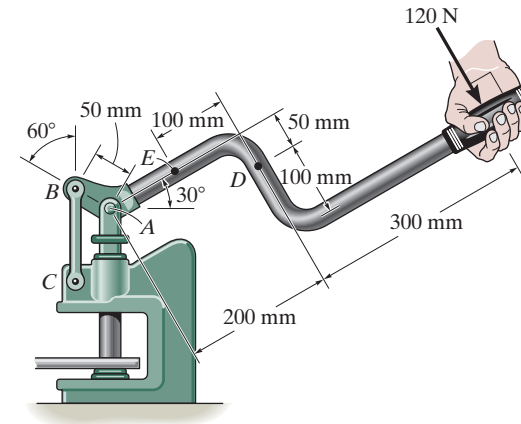

Member:

$\circlearrowleft + \Sigma M_A = 0; \qquad F_{BC} \cos 30°(50) - 120(500) = 0$

$F_{BC} = 1385.6 \text{ N} = 1.3856 \text{ kN}$

Segment:

$\overset{+}{\swarrow} \Sigma F_{x'} = 0; \qquad N_E = 0$ **Ans.**

$\nwarrow + \Sigma F_{y'} = 0; \qquad V_E - 120 = 0; \qquad V_E = 120 \text{ N}$ **Ans.**

$\circlearrowleft + \Sigma M_E = 0; \qquad M_E - 120(0.4) = 0; \qquad M_E = 48.0 \text{ N} \cdot \text{m}$ **Ans.**

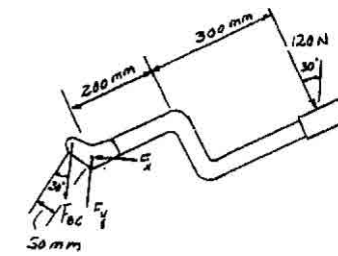

Short link:

$\overset{+}{\leftarrow} \Sigma F_x = 0; \qquad V = 0$ **Ans.**

$+\uparrow \Sigma F_y = 0; \qquad 1.3856 - N = 0; \qquad N = 1.39 \text{ kN}$ **Ans.**

$\circlearrowleft + \Sigma M_H = 0; \qquad M = 0$ **Ans.**

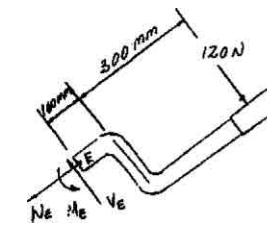

Ans:
$N_E = 0, V_E = 120 \text{ N}, M_E = 48.0 \text{ N} \cdot \text{m},$
Short link: $V = 0, N = 1.39 \text{ kN}, M = 0$

***1–24.** Determine the resultant internal loadings acting on the cross section of the semicircular arch at C.

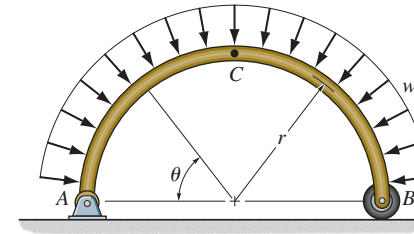

$$\circlearrowleft + \Sigma M_A = 0; \qquad B_y(2r) - \int_0^{\pi} (w_0 r\, d\theta)(\cos\theta)(r\sin\theta) - \int_0^{\pi} (w_0 r\, d\theta)(\sin\theta) r(1 - \cos\theta) = 0$$

$$B_y(2r) - w_0 r^2 \int_0^{\pi} \sin\theta\, d\theta = 0$$

$$B_y(2r) - w_0 r^2(-\cos\theta)\Big]_0^{\pi} = 0$$

$$B_y = w_0 r$$

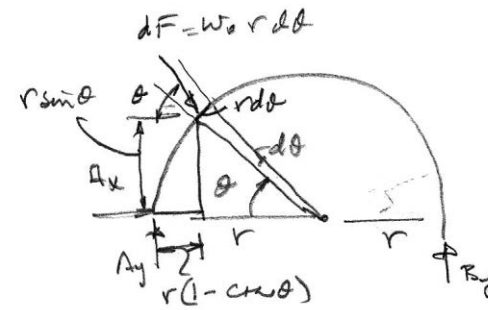

$$\xrightarrow{+} \Sigma F_x = 0; \qquad -N_C - w_0 r \int_0^{\frac{\pi}{2}} \cos\theta\, d\theta = 0$$

$$N_C = -w_0 r \sin\theta \Big|_0^{\frac{\pi}{2}} = -w_0 r \qquad \textbf{Ans.}$$

$$+\uparrow \Sigma F_y = 0; \qquad w_0 r + V_C - w_0 r \int_0^{\frac{\pi}{2}} \sin\theta\, d\theta = 0$$

$$w_0 r + V_C - w_0 r(-\cos\theta)\Big|_0^{\frac{\pi}{2}} = 0; \qquad V_2 = 0 \qquad \textbf{Ans.}$$

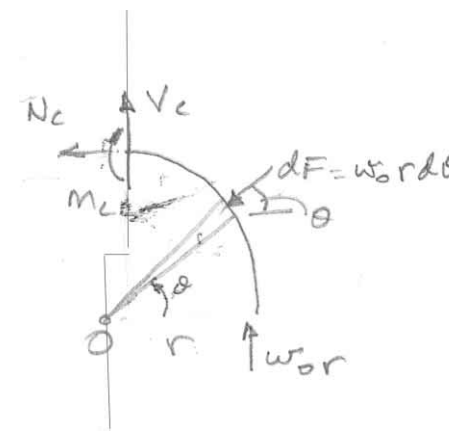

$$\circlearrowleft + \Sigma M_0 = 0; \qquad w_0 r(r) - M_C + (-w_0 r)(r) = 0$$

$$M_C = 0 \qquad \textbf{Ans.}$$

1–25. Determine the resultant internal loadings acting on the cross section through point B of the signpost. The post is fixed to the ground and a uniform pressure of 7 lb/ft^2 acts perpendicular to the face of the sign.

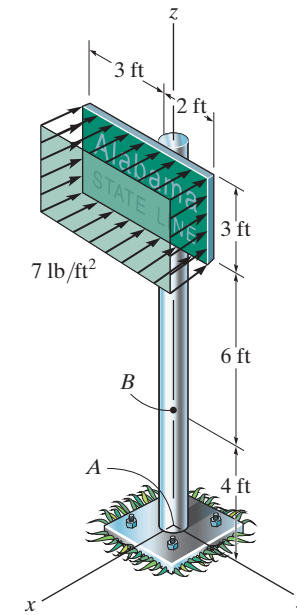

$\Sigma F_x = 0; \quad (V_B)_x - 105 = 0; \quad (V_B)_x = 105 \text{ lb}$ **Ans.**

$\Sigma F_y = 0; \quad (V_B)_y = 0$ **Ans.**

$\Sigma F_z = 0; \quad (N_B)_z = 0$ **Ans.**

$\Sigma M_x = 0; \quad (M_B)_x = 0$ **Ans.**

$\Sigma M_y = 0; \quad (M_B)_y - 105(7.5) = 0; \quad (M_B)_y = 788 \text{ lb} \cdot \text{ft}$ **Ans.**

$\Sigma M_z = 0; \quad (T_B)_z - 105(0.5) = 0; \quad (T_B)_z = 52.5 \text{ lb} \cdot \text{ft}$ **Ans.**

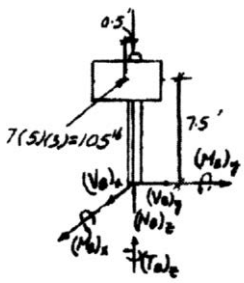

Ans:
$(V_B)_x = 105$ lb, $(V_B)_y = 0$, $(N_B)_z = 0$,
$(M_B)_x = 0$, $(M_B)_y = 788$ lb · ft,
$(T_B)_z = 52.5$ lb · ft

1–26. The shaft is supported at its ends by two bearings A and B and is subjected to the forces applied to the pulleys fixed to the shaft. Determine the resultant internal loadings acting on the cross section located at point C. The 300-N forces act in the $-z$ direction and the 500-N forces act in the $+x$ direction. The journal bearings at A and B exert only x and z components of force on the shaft.

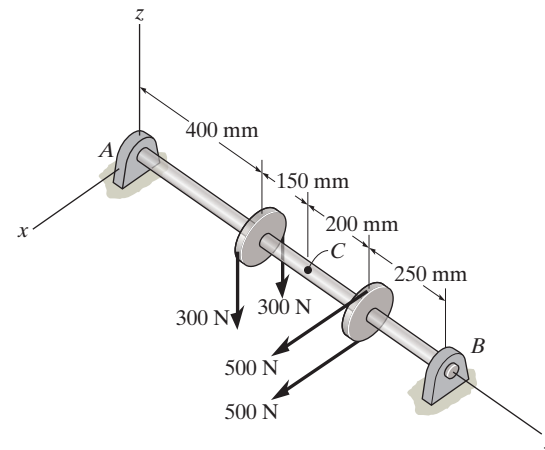

$\Sigma F_x = 0; \quad (V_C)_x + 1000 - 750 = 0; \quad (V_C)_x = -250\text{ N}$ **Ans.**

$\Sigma F_y = 0; \quad (N_C)_y = 0$ **Ans.**

$\Sigma F_z = 0; \quad (V_C)_z + 240 = 0; \quad (V_C)_z = -240\text{ N}$ **Ans.**

$\Sigma M_x = 0; \quad (M_C)_x + 240(0.45) = 0; \quad (M_C)_x = -108\text{ N}\cdot\text{m}$ **Ans.**

$\Sigma M_y = 0; \quad (T_C)_y = 0$ **Ans.**

$\Sigma M_z = 0; \quad (M_C)_z - 1000(0.2) + 750(0.45) = 0; \quad (M_C)_z = -138\text{ N}\cdot\text{m}$ **Ans.**

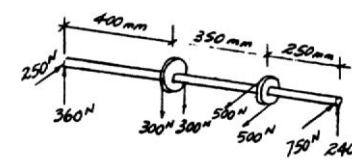

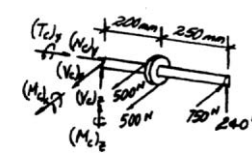

Ans:
$(V_C)_x = -250\text{ N}, (N_C)_y = 0, (V_C)_z = -240\text{ N},$
$(M_C)_x = -108\text{ N}\cdot\text{m}, (T_C)_y = 0,$
$(M_C)_z = -138\text{ N}\cdot\text{m}$

1–27. The pipe assembly is subjected to a force of 600 N at B. Determine the resultant internal loadings acting on the cross section at C.

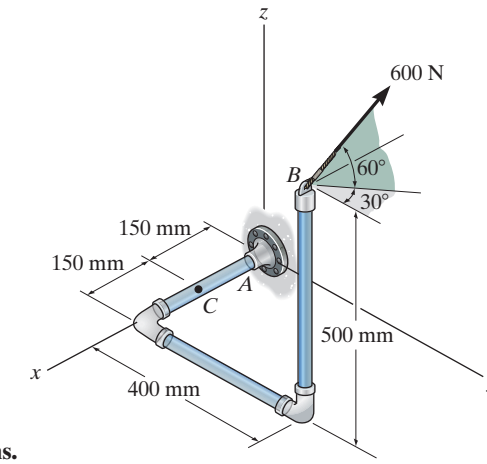

Internal Loading: Referring to the free-body diagram of the section of the pipe shown in Fig. *a*,

$\Sigma F_x = 0;\quad (N_C)_x - 600\cos 60°\sin 30° = 0 \qquad (N_C)_x = 150\text{ N}$ **Ans.**

$\Sigma F_y = 0;\quad (V_C)_y + 600\cos 60°\cos 30° = 0 \qquad (V_C)_y = -260\text{ N}$ **Ans.**

$\Sigma F_z = 0;\quad (V_C)_z + 600\sin 60° = 0 \qquad (V_C)_z = -520\text{ N}$ **Ans.**

$\Sigma M_x = 0;\ (T_C)_x + 600\sin 60°(0.4) - 600\cos 60°\cos 30°(0.5) = 0$

$(T_C)_x = -77.9\text{ N}\cdot\text{m}$ **Ans.**

$\Sigma M_y = 0;\ (M_C)_y - 600\sin 60°\,(0.15) - 600\cos 60°\sin 30°(0.5) = 0$

$(M_C)_y = 153\text{ N}\cdot\text{m}$ **Ans.**

$\Sigma M_z = 0;\ (M_C)_z + 600\cos 60°\cos 30°(0.15) + 600\cos 60°\sin 30°(0.4) = 0$

$(M_C)_z = -99.0\text{ N}\cdot\text{m}$ **Ans.**

The negative signs indicate that $(\mathbf{V}_C)_y$, $(\mathbf{V}_C)_z$, $(\mathbf{T}_C)_x$, and $(\mathbf{M}_C)_z$ act in the opposite sense to that shown on the free-body diagram.

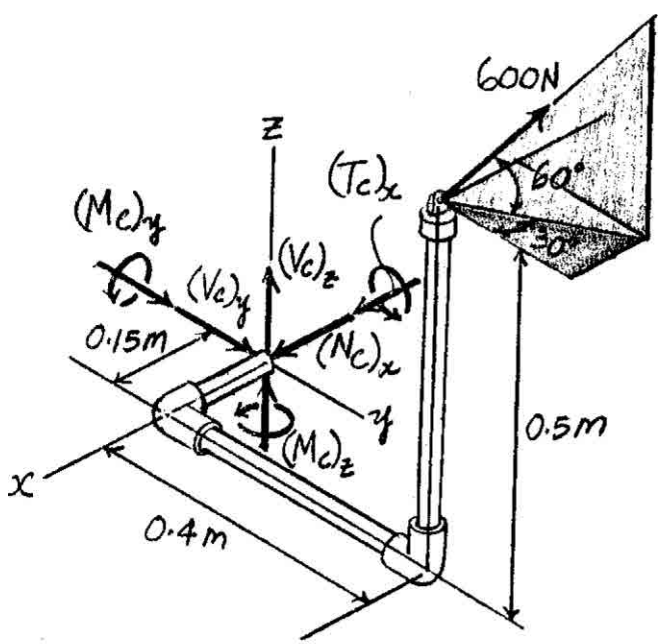

(a)

Ans:
$(N_C)_x = 150\text{ N}$, $(V_C)_y = -260\text{ N}$,
$(V_C)_z = -520\text{ N}$, $(T_C)_x = -77.9\text{ N}\cdot\text{m}$,
$(M_C)_y = 153\text{ N}\cdot\text{m}$, $(M_C)_z = -99.0\text{ N}\cdot\text{m}$

***1–28.** The brace and drill bit is used to drill a hole at O. If the drill bit jams when the brace is subjected to the forces shown, determine the resultant internal loadings acting on the cross section of the drill bit at A.

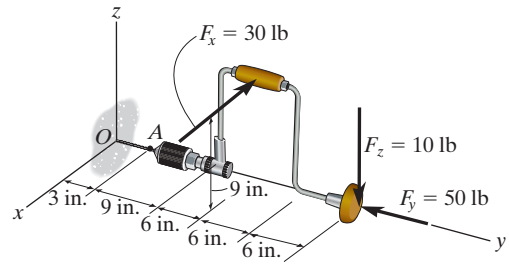

Internal Loading: Referring to the free-body diagram of the section of the drill and brace shown in Fig. *a*,

$\Sigma F_x = 0;\quad (V_A)_x - 30 = 0 \quad (V_A)_x = 30\text{ lb}$ **Ans.**

$\Sigma F_y = 0;\quad (N_A)_y - 50 = 0 \quad (N_A)_y = 50\text{ lb}$ **Ans.**

$\Sigma F_z = 0;\quad (V_A)_z - 10 = 0 \quad (V_A)_z = 10\text{ lb}$ **Ans.**

$\Sigma M_x = 0;\quad (M_A)_x - 10(2.25) = 0 \quad (M_A)_x = 22.5\text{ lb}\cdot\text{ft}$ **Ans.**

$\Sigma M_y = 0;\quad (T_A)_y - 30(0.75) = 0 \quad (T_A)_y = 22.5\text{ lb}\cdot\text{ft}$ **Ans.**

$\Sigma M_z = 0;\quad (M_A)_z + 30(1.25) = 0 \quad (M_A)_z = -37.5\text{ lb}\cdot\text{ft}$ **Ans.**

The negative sign indicates that $(M_A)_z$ acts in the opposite sense to that shown on the free-body diagram.

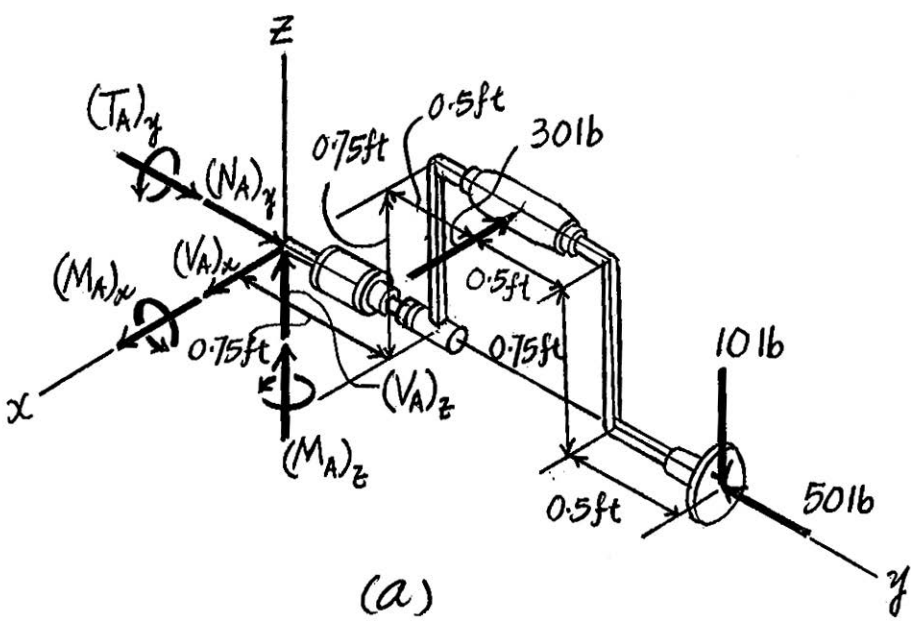

(a)

1–29. The curved rod AD of radius r has a weight per length of w. If it lies in the vertical plane, determine the resultant internal loadings acting on the cross section through point B. *Hint*: The distance from the centroid C of segment AB to point O is $OC = [2r \sin(\theta/2)]/\theta$.

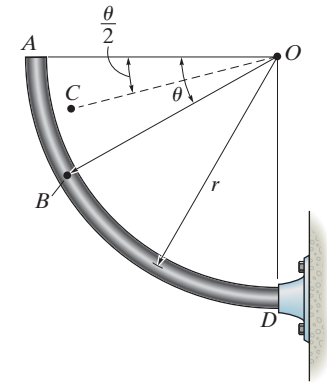

$\searrow^{+} \Sigma F_x = 0; \quad N_B + wr\theta \cos\theta = 0$

$N_B = -wr\theta \cos\theta$ **Ans.**

$+\nearrow \Sigma F_y = 0; \quad -V_B - wr\theta \sin\theta = 0$

$V_B = -wr\theta \sin\theta$ **Ans.**

$\circlearrowleft + \Sigma M_0 = 0; \; wr\theta\left(\cos\frac{\theta}{2}\right)\left(\frac{2r\sin(\theta/2)}{\theta}\right) + (N_B)r + M_B = 0$

$M_B = -N_B r - wr^2 2\sin(\theta/2)\cos(\theta/2)$

$M_B = wr^2(\theta\cos\theta - \sin\theta)$ **Ans.**

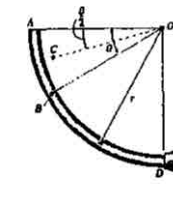

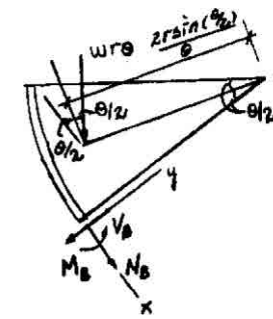

Ans:
$N_B = -wr\theta\cos\theta, V_B = -wr\theta\sin\theta,$
$M_B = wr^2(\theta\cos\theta - \sin\theta)$

1–30. A differential element taken from a curved bar is shown in the figure. Show that $dN/d\theta = V$, $dV/d\theta = -N$, $dM/d\theta = -T$, and $dT/d\theta = M$.

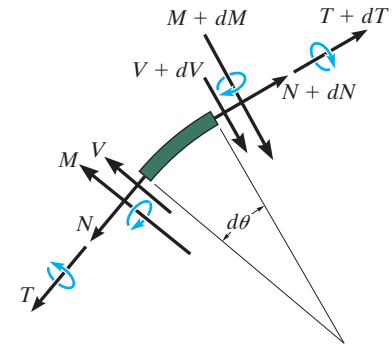

$\Sigma F_x = 0;$

$$N \cos\frac{d\theta}{2} + V \sin\frac{d\theta}{2} - (N + dN)\cos\frac{d\theta}{2} + (V + dV)\sin\frac{d\theta}{2} = 0 \qquad \textbf{(1)}$$

$\Sigma F_y = 0;$

$$N \sin\frac{d\theta}{2} - V \cos\frac{d\theta}{2} + (N + dN)\sin\frac{d\theta}{2} + (V + dV)\cos\frac{d\theta}{2} = 0 \qquad \textbf{(2)}$$

$\Sigma M_x = 0;$

$$T \cos\frac{d\theta}{2} + M \sin\frac{d\theta}{2} - (T + dT)\cos\frac{d\theta}{2} + (M + dM)\sin\frac{d\theta}{2} = 0 \qquad \textbf{(3)}$$

$\Sigma M_y = 0;$

$$T \sin\frac{d\theta}{2} - M \cos\frac{d\theta}{2} + (T + dT)\sin\frac{d\theta}{2} + (M + dM)\cos\frac{d\theta}{2} = 0 \qquad \textbf{(4)}$$

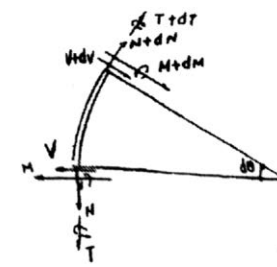

Since $\frac{d\theta}{2}$ is can add, then $\sin\frac{d\theta}{2} = \frac{d\theta}{2}$, $\cos\frac{d\theta}{2} = 1$

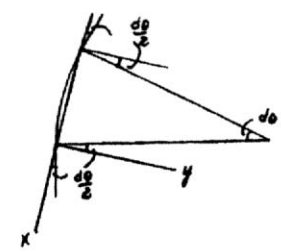

Eq. (1) becomes $V d\theta - dN + \frac{dV d\theta}{2} = 0$

Neglecting the second order term, $V d\theta - dN = 0$

$\frac{dN}{d\theta} = V$ QED

Eq. (2) becomes $N d\theta + dV + \frac{dN d\theta}{2} = 0$

Neglecting the second order term, $N d\theta + dV = 0$

$\frac{dV}{d\theta} = -N$ QED

Eq. (3) becomes $M d\theta - dT + \frac{dM d\theta}{2} = 0$

Neglecting the second order term, $M d\theta - dT = 0$

$\frac{dT}{d\theta} = M$ QED

Eq. (4) becomes $T d\theta + dM + \frac{dT d\theta}{2} = 0$

Neglecting the second order term, $T d\theta + dM = 0$

$\frac{dM}{d\theta} = -T$ QED

1–31. The supporting wheel on a scaffold is held in place on the leg using a 4-mm-diameter pin as shown. If the wheel is subjected to a normal force of 3 kN, determine the average shear stress developed in the pin. Neglect friction between the inner scaffold puller leg and the tube used on the wheel.

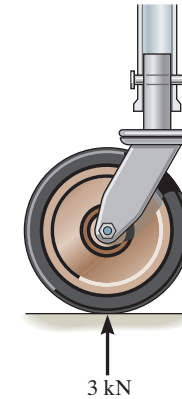

$+\uparrow \Sigma F_y = 0; \qquad 3\text{ kN} \cdot 2V = 0; \qquad V = 1.5\text{ kN}$

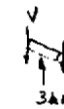

$$\tau_{avg} = \frac{V}{A} = \frac{1.5(10^3)}{\frac{\pi}{4}(0.004)^2} = 119\text{ MPa}$$ **Ans.**

Ans:
$\tau_{avg} = 119$ MPa

***1–32.** The lever is held to the fixed shaft using a tapered pin AB, which has a mean diameter of 6 mm. If a couple is applied to the lever, determine the average shear stress in the pin between the pin and lever.

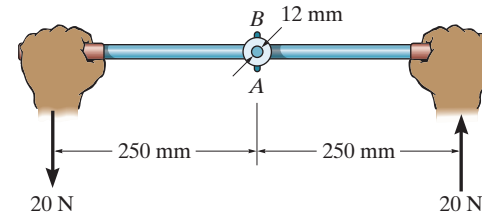

$\circlearrowleft + \Sigma M_O = 0; \quad -F(12) + 20(500) = 0; \qquad F = 833.33 \text{ N}$

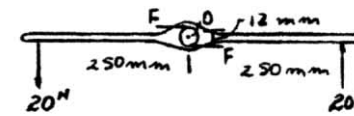

$$\tau_{avg} = \frac{V}{A} = \frac{833.33}{\frac{\pi}{4}(\frac{6}{1000})^2} = 29.5 \text{ MPa}$$ **Ans.**

1–33. The bar has a cross-sectional area A and is subjected to the axial load P. Determine the average normal and average shear stresses acting over the shaded section, which is oriented at θ from the horizontal. Plot the variation of these stresses as a function of θ $(0 \le \theta \le 90°)$.

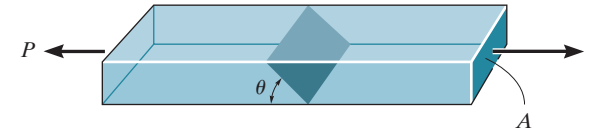

Equations of Equilibrium:

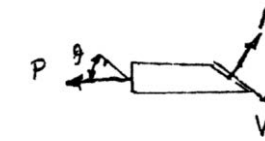

$\searrow + \Sigma F_x = 0; \qquad V - P\cos\theta = 0 \qquad V = P\cos\theta$

$\nearrow + \Sigma F_y = 0; \qquad N - P\sin\theta = 0 \qquad N = P\sin\theta$

Average Normal Stress and Shear Stress: Area at θ plane, $A' = \dfrac{A}{\sin\theta}$.

$$\sigma_{avg} = \frac{N}{A'} = \frac{P\sin\theta}{\frac{A}{\sin\theta}} = \frac{P}{A}\sin^2\theta \qquad \textbf{Ans.}$$

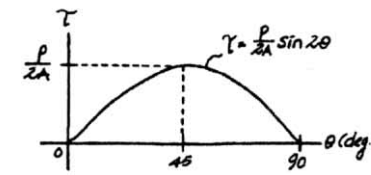

$$\tau_{avg} = \frac{V}{A'} = \frac{P\cos\theta}{\frac{A}{\sin\theta}}$$

$$= \frac{P}{A}\sin\theta\cos\theta = \frac{P}{2A}\sin 2\theta \qquad \textbf{Ans.}$$

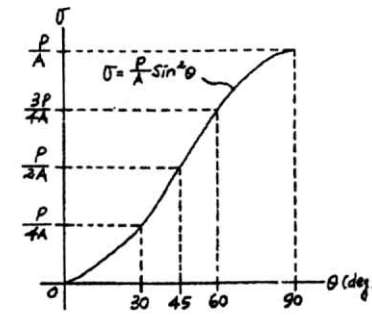

Ans:

$\sigma_{avg} = \dfrac{P}{A}\sin^2\theta, \ \tau_{avg} = \dfrac{P}{2A}\sin 2\theta$

1–34. The built-up shaft consists of a pipe AB and solid rod BC. The pipe has an inner diameter of 20 mm and outer diameter of 28 mm. The rod has a diameter of 12 mm. Determine the average normal stress at points D and E and represent the stress on a volume element located at each of these points.

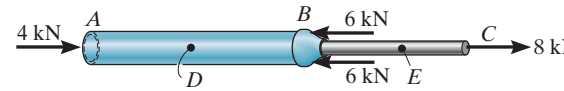

At D:

$$\sigma_D = \frac{P}{A} = \frac{4(10^3)}{\frac{\pi}{4}(0.028^2 - 0.02^2)} = 13.3 \text{ MPa} \quad \text{(C)}$$ **Ans.**

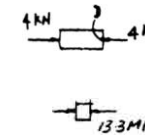

At E:

$$\sigma_E = \frac{P}{A} = \frac{8(10^3)}{\frac{\pi}{4}(0.012^2)} = 70.7 \text{ MPa} \quad \text{(T)}$$ **Ans.**

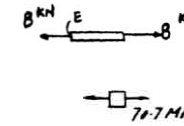

Ans:
$\sigma_D = 13.3$ MPa (C), $\sigma_E = 70.7$ MPa (T)

1–35. If the turnbuckle is subjected to an axial force of $P = 900$ lb, determine the average normal stress developed in section a–a and in each of the bolt shanks at B and C. Each bolt shank has a diameter of 0.5 in.

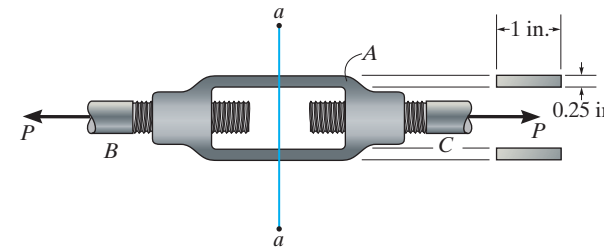

Internal Loading: The normal force developed in section a–a of the bracket and the bolt shank can be obtained by writing the force equations of equilibrium along the x axis with reference to the free-body diagrams of the sections shown in Figs. a and b, respectively.

$$\overset{+}{\rightarrow} \Sigma F_x = 0; \qquad 900 - 2N_{a-a} = 0 \qquad N_{a-a} = 450 \text{ lb}$$

$$\overset{+}{\rightarrow} \Sigma F_x = 0; \qquad 900 - N_b = 0 \qquad N_b = 900 \text{ lb}$$

Average Normal Stress: The cross-sectional areas of section a–a and the bolt shank are $A_{a-a} = (1)(0.25) = 0.25 \text{ in}^2$ and $A_b = \frac{\pi}{4}(0.5^2) = 0.1963 \text{ in}^2$, respectively. We obtain

$$(\sigma_{a-a})_{\text{avg}} = \frac{N_{a-a}}{A_{a-a}} = \frac{450}{0.25} = 1800 \text{ psi} = 1.80 \text{ ksi} \qquad \textbf{Ans.}$$

$$\sigma_b = \frac{N_b}{A_b} = \frac{900}{0.1963} = 4584 \text{ psi} = 4.58 \text{ ksi} \qquad \textbf{Ans.}$$

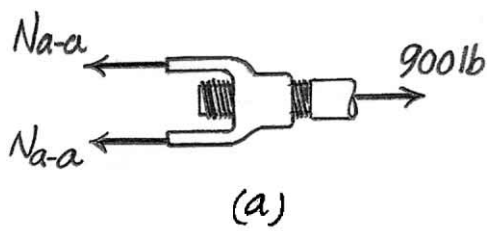

(a)

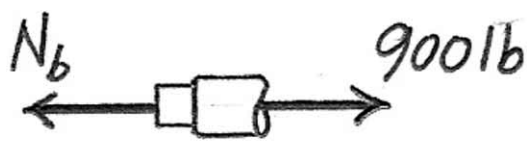

(b)

Ans:
$(\sigma_{a-a})_{\text{avg}} = 1.80$ ksi, $\sigma_b = 4.58$ ksi

***1–36.** The average normal stresses developed in section *a–a* of the turnbuckle, and the bolts shanks at *B* and *C*, are not allowed to exceed 15 ksi and 45 ksi, respectively. Determine the maximum axial force **P** that can be applied to the turnbuckle. Each bolt shank has a diameter of 0.5 in.

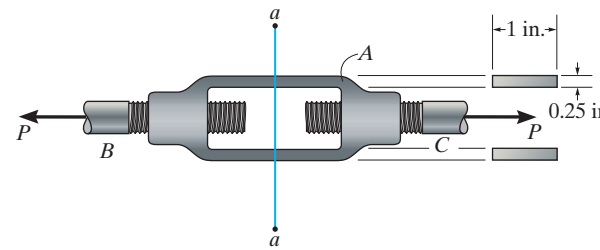

Internal Loading: The normal force developed in section *a–a* of the bracket and the bolt shank can be obtained by writing the force equations of equilibrium along the *x* axis with reference to the free-body diagrams of the sections shown in Figs. *a* and *b*, respectively.

$\overset{+}{\rightarrow} \Sigma F_x = 0; \qquad P - 2N_{a-a} = 0 \qquad N_{a-a} = P/2$

$\overset{+}{\rightarrow} \Sigma F_x = 0; \qquad P - N_b = 0 \qquad N_b = P$

Average Normal Stress: The cross-sectional areas of section *a–a* and the bolt shank are $A_{a-a} = 1(0.25) = 0.25 \text{ in}^2$ and $A_b = \frac{\pi}{4}(0.5^2) = 0.1963 \text{ in}^2$, respectively. We obtain

$$(\sigma_{a-a})_{\text{allow}} = \frac{N_{a-a}}{A_{a-a}}; \qquad 15(10^3) = \frac{P/2}{0.25}$$

$$P = 7500 \text{ lb} = 7.50 \text{ kip (controls)} \qquad \textbf{Ans.}$$

$$\sigma_b = \frac{N_b}{A_b}; \qquad 45(10^3) = \frac{P}{0.1963}$$

$$P = 8336 \text{ lb} = 8.84 \text{ kip}$$

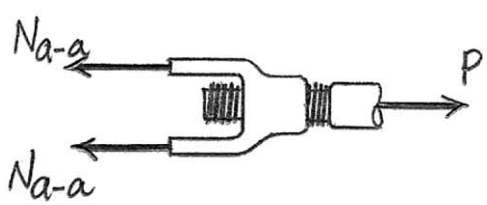

(a)

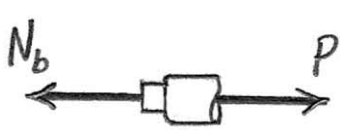

(b)

1–37. The plate has a width of 0.5 m. If the stress distribution at the support varies as shown, determine the force **P** applied to the plate and the distance d to where it is applied.

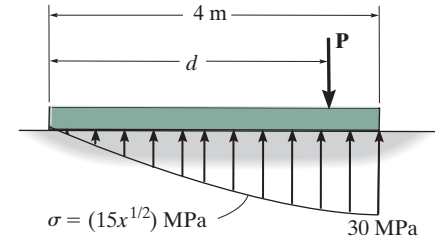

The resultant force dF of the bearing pressure acting on the plate of area $dA = b\,dx = 0.5\,dx$, Fig. a,

$$dF = \sigma_b\,dA = (15x^{\frac{1}{2}})(10^6)(0.5dx) = 7.5(10^6)x^{\frac{1}{2}}\,dx$$

$$+\uparrow \Sigma F_y = 0; \qquad \int dF - P = 0$$

$$\int_0^{4\,\text{m}} 7.5(10^6)x^{\frac{1}{2}}\,dx - P = 0$$

$$P = 40(10^6)\ \text{N} = 40\ \text{MN} \qquad \textbf{Ans.}$$

Equilibrium requires

$$\circlearrowleft + \Sigma M_O = 0; \qquad \int x\,dF - Pd = 0$$

$$\int_0^{4\,\text{m}} x[7.5(10^6)x^{\frac{1}{2}}\,dx] - 40(10^6)\,d = 0$$

$$d = 2.40\ \text{m} \qquad \textbf{Ans.}$$

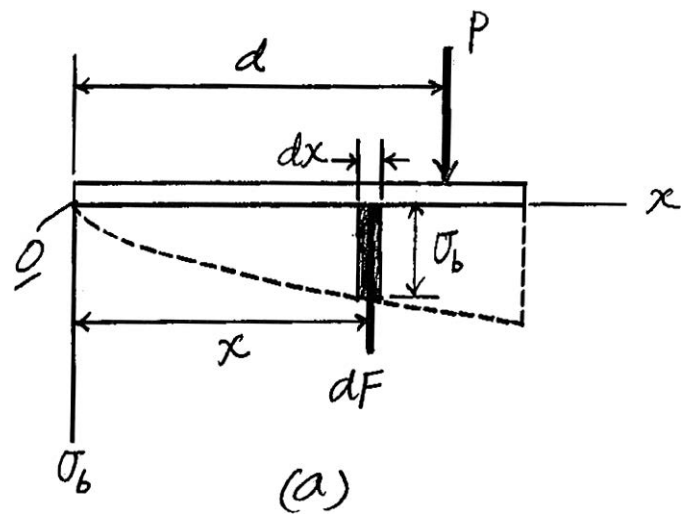

Ans:
$P = 40$ MN, $d = 2.40$ m

1–38. The two members used in the construction of an aircraft fuselage are joined together using a 30° fish-mouth weld. Determine the average normal and average shear stress on the plane of each weld. Assume each inclined plane supports a horizontal force of 400 lb.

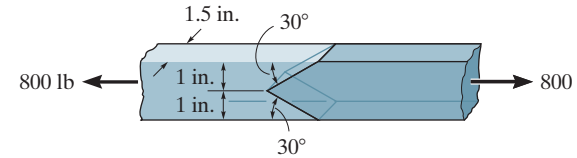

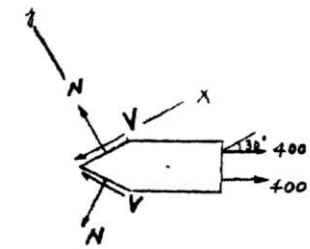

$N - 400 \sin 30° = 0; \qquad N = 200 \text{ lb}$

$400 \cos 30° - V = 0; \qquad V = 346.41 \text{ lb}$

$$A' = \frac{1.5(1)}{\sin 30°} = 3 \text{ in}^2$$

$$\sigma = \frac{N}{A'} = \frac{200}{3} = 66.7 \text{ psi}$$ **Ans.**

$$\tau = \frac{V}{A'} = \frac{346.41}{3} = 115 \text{ psi}$$ **Ans.**

Ans:
$\sigma = 66.7$ psi, $\tau = 115$ psi

1–39. If the block is subjected to the centrally applied force of 600 kN, determine the average normal stress in the material. Show the stress acting on a differential volume element of the material.

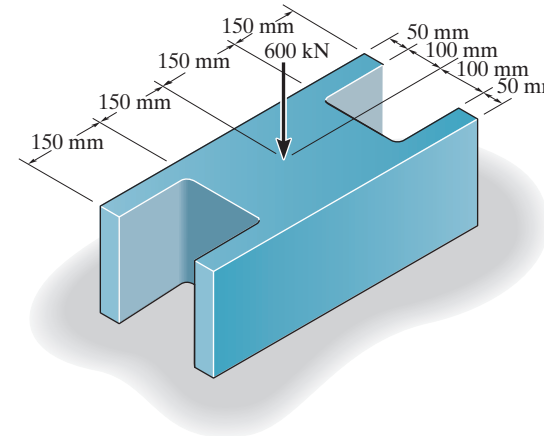

The cross-sectional area of the block is $A = 0.6(0.3) - 0.3(0.2) = 0.12\ \text{m}^2$.

$$\sigma_{avg} = \frac{P}{A} = \frac{600(10^3)}{0.12} = 5(10^6)\ \text{Pa} = 5\ \text{MPa}$$ **Ans.**

The average normal stress distribution over the cross section of the block and the state of stress of a point in the block represented by a differential volume element are shown in Fig. *a*

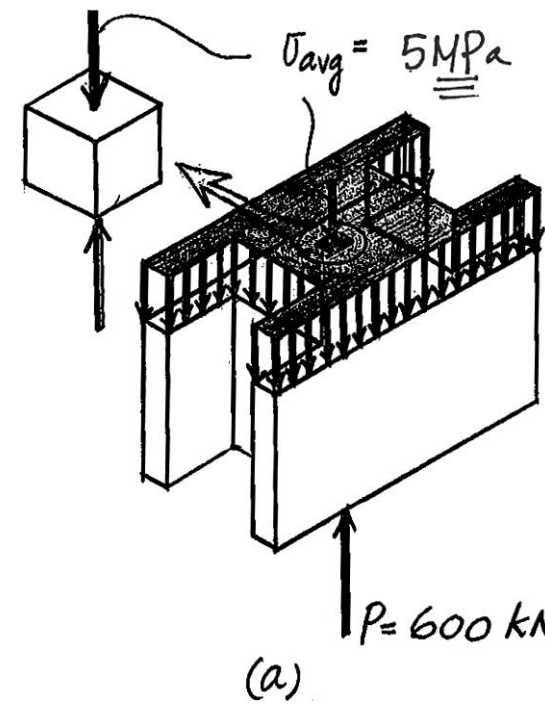

Ans:
$\sigma_{avg} = 5\ \text{MPa}$

***1–40.** Determine the average normal stress in each of the 20-mm diameter bars of the truss. Set $P = 40$ kN.

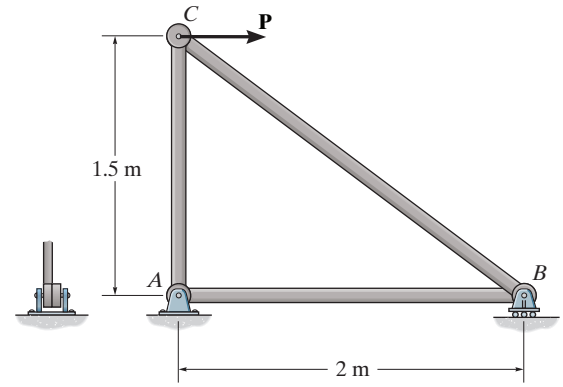

Internal Loadings: The force developed in each member of the truss can be determined by using the method of joints. First, consider the equilibrium of joint C, Fig. a,

$\overset{+}{\rightarrow} \Sigma F_x = 0;$ $\quad 40 - F_{BC}\left(\frac{4}{5}\right) = 0$ $\quad F_{BC} = 50$ kN (C)

$+\uparrow \Sigma F_y = 0;$ $\quad 50\left(\frac{3}{5}\right) - F_{AC} = 0$ $\quad F_{AC} = 30$ kN (T)

Subsequently, the equilibrium of joint B, Fig. b, is considered

$\overset{+}{\rightarrow} \Sigma F_x = 0;$ $\quad 50\left(\frac{4}{5}\right) - F_{AB} = 0$ $\quad F_{AB} = 40$ kN (T)

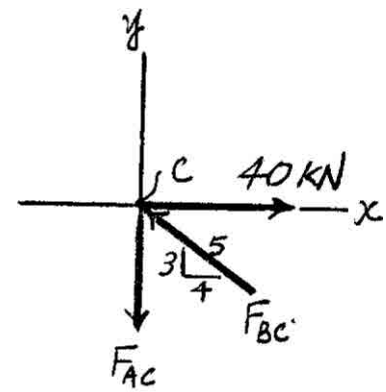

(a)

Average Normal Stress: The cross-sectional area of each of the bars is $A = \frac{\pi}{4}(0.02^2) = 0.3142(10^{-3})$ m^2. We obtain,

$$(\sigma_{avg})_{BC} = \frac{F_{BC}}{A} = \frac{50(10^3)}{0.3142(10^{-3})} = 159 \text{ MPa}$$ **Ans.**

$$(\sigma_{avg})_{AC} = \frac{F_{AC}}{A} = \frac{30(10^3)}{0.3142(10^{-3})} = 95.5 \text{ MPa}$$ **Ans.**

$$(\sigma_{avg})_{AB} = \frac{F_{AB}}{A} = \frac{40(10^3)}{0.3142(10^{-3})} = 127 \text{ MPa}$$ **Ans.**

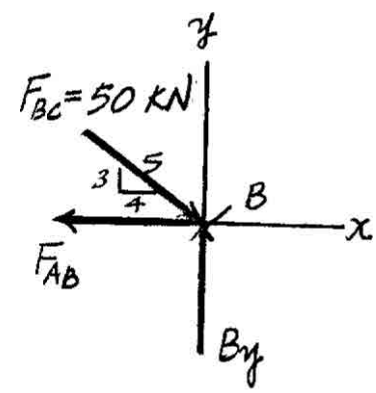

(b)

1–41. If the average normal stress in each of the 20-mm-diameter bars is not allowed to exceed 150 MPa, determine the maximum force **P** that can be applied to joint *C*.

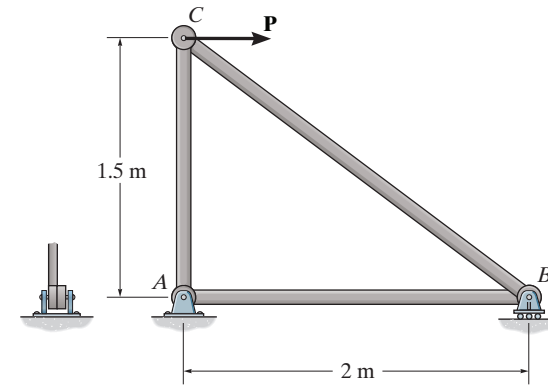

Internal Loadings: The force developed in each member of the truss can be determined by using the method of joints. First, consider the equilibrium of joint *C*, Fig. *a*,

$$\overset{+}{\rightarrow} \Sigma F_x = 0; \qquad P - F_{BC}\left(\frac{4}{5}\right) = 0 \qquad F_{BC} = 1.25P(\text{C})$$

$$+\uparrow \Sigma F_y = 0; \qquad 1.25P\left(\frac{3}{5}\right) - F_{AC} = 0 \qquad F_{AC} = 0.75P(\text{T})$$

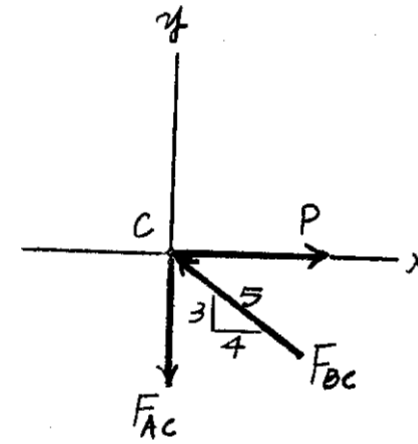

(a)

Subsequently, the equilibrium of joint *B*, Fig. *b*, is considered

$$\overset{+}{\rightarrow} \Sigma F_x = 0; \qquad 1.25P\left(\frac{4}{5}\right) - F_{AB} = 0 \qquad F_{AB} = P(\text{T})$$

Average Normal Stress: Since the cross-sectional area and the allowable normal stress of each bar are the same, member *BC* which is subjected to the maximum normal force is the critical member. The cross-sectional area of each of the bars is $A = \frac{\pi}{4}(0.02^2) = 0.3142(10^{-3})\ \text{m}^2$. We have,

$$(\sigma_{\text{avg}})_{\text{allow}} = \frac{F_{BC}}{A}; \qquad 150(10^6) = \frac{1.25P}{0.3142(10^{-3})}$$

$$P = 37\,699\ \text{N} = 37.7\ \text{kN} \qquad \textbf{Ans.}$$

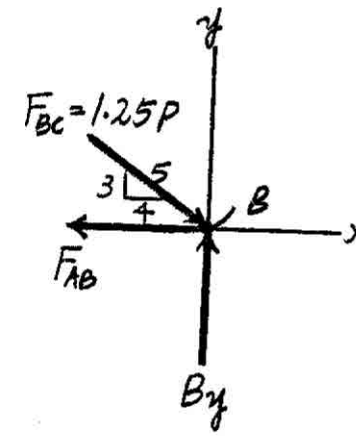

(b)

Ans:
$P = 37.7$ kN

1–42. Determine the average shear stress developed in pin A of the truss. A horizontal force of $P = 40$ kN is applied to joint C. Each pin has a diameter of 25 mm and is subjected to double shear.

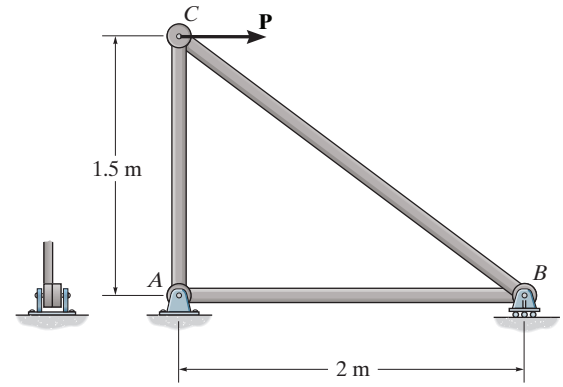

Internal Loadings: The forces acting on pins A and B are equal to the support reactions at A and B. Referring to the free-body diagram of the entire truss, Fig. a,

$\Sigma M_A = 0;$ $\quad B_y(2) - 40(1.5) = 0$ $\quad B_y = 30$ kN

$\overset{+}{\rightarrow} \Sigma F_x = 0;$ $\quad 40 - A_x = 0$ $\quad A_x = 40$ kN

$+\uparrow \Sigma F_y = 0;$ $\quad 30 - A_y = 0$ $\quad A_y = 30$ kN

Thus,

$$F_A = \sqrt{A_x^2 + A_y^2} = \sqrt{40^2 + 30^2} = 50 \text{ kN}$$

Since pin A is in double shear, Fig. b, the shear forces developed on the shear planes of pin A are

$$V_A = \frac{F_A}{2} = \frac{50}{2} = 25 \text{ kN}$$

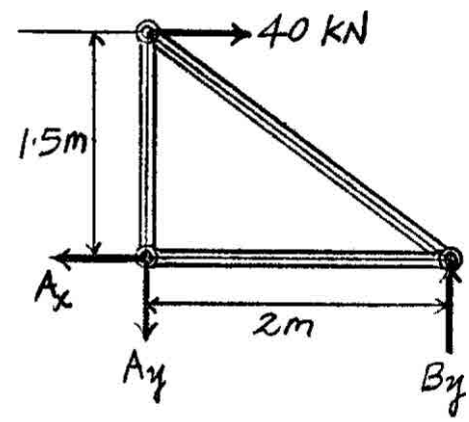

(a)

Average Shear Stress: The area of the shear plane for pin A is $A_A = \frac{\pi}{4}(0.025^2) = 0.4909(10^{-3})$ m^2. We have

$$(\tau_{avg})_A = \frac{V_A}{A_A} = \frac{25(10^3)}{0.4909(10^{-3})} = 50.9 \text{ MPa}$$ **Ans.**

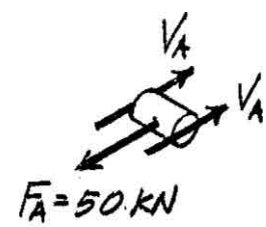

Pin A
(b)

Ans:
$(\tau_{avg})_A = 50.9$ MPa

1–43. The 150-kg bucket is suspended from end E of the frame. Determine the average normal stress in the 6-mm diameter wire CF and the 15-mm diameter short strut BD.

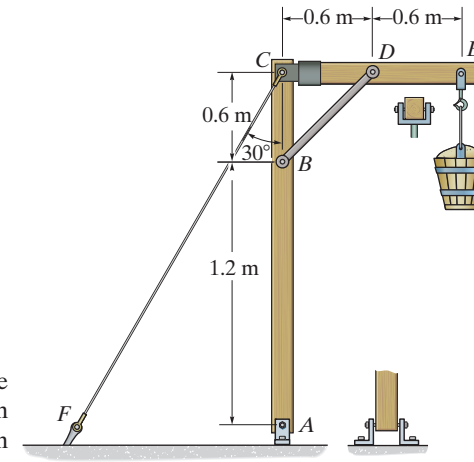

Internal Loadings: The normal force developed in rod BD and cable CF can be determined by writing the moment equations of equilibrium about C and A with reference to the free-body diagram of member CE and the entire frame shown in Figs. a and b, respectively.

$$\circlearrowleft + \Sigma M_C = 0; \qquad F_{BD} \sin 45°(0.6) - 150(9.81)(1.2) = 0 \qquad F_{BD} = 4162.03 \text{ N}$$

$$\circlearrowleft + \Sigma M_A = 0; \qquad F_{CF} \sin 30°(1.8) - 150(9.81)(1.2) = 0 \qquad F_{CF} = 1962 \text{ N}$$

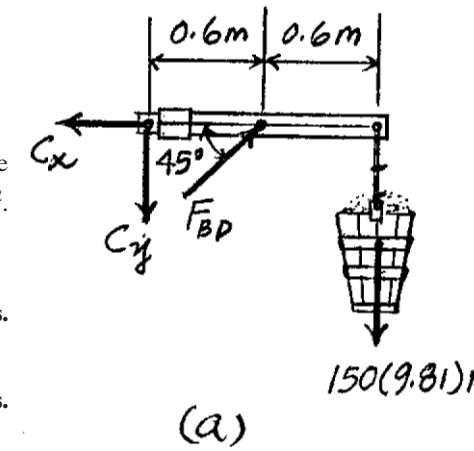

Average Normal Stress: The cross-sectional areas of rod BD and cable CF are $A_{BD} = \frac{\pi}{4}(0.015^2) = 0.1767(10^{-3})\text{ m}^2$ and $A_{CF} = \frac{\pi}{4}(0.006^2) = 28.274(10^{-6})\text{ m}^2$. We have

$$(\sigma_{avg})_{BD} = \frac{F_{BD}}{A_{BD}} = \frac{4162.03}{0.1767(10^{-3})} = 23.6 \text{ MPa} \qquad \textbf{Ans.}$$

$$(\sigma_{avg})_{CF} = \frac{F_{CF}}{A_{CF}} = \frac{1962}{28.274(10^{-6})} = 69.4 \text{ MPa} \qquad \textbf{Ans.}$$

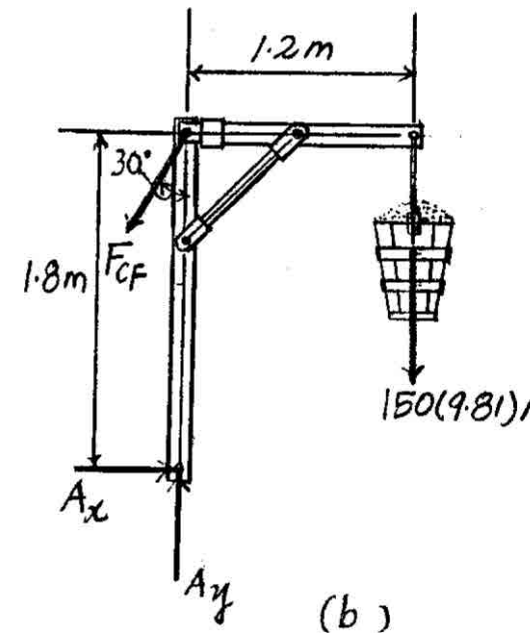

Ans:
$(\sigma_{avg})_{BD} = 23.6$ MPa, $(\sigma_{avg})_{CF} = 69.4$ MPa

***1–44.** The 150-kg bucket is suspended from end E of the frame. If the diameters of the pins at A and D are 6 mm and 10 mm, respectively, determine the average shear stress developed in these pins. Each pin is subjected to double shear.

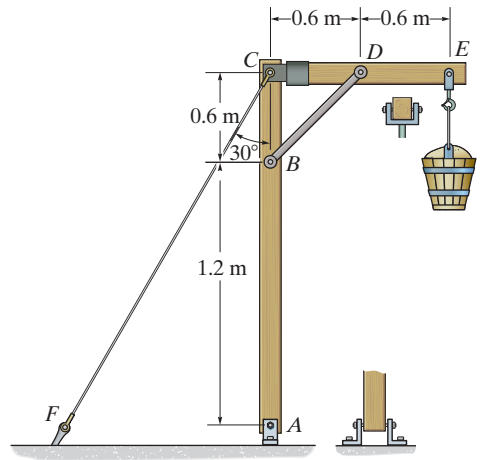

Internal Loading: The forces exerted on pins D and A are equal to the support reaction at D and A. First, consider the free-body diagram of member CE shown in Fig. a.

$$\circlearrowleft + \Sigma M_C = 0; \quad F_{BD} \sin 45°(0.6) - 150(9.81)(1.2) = 0 \qquad F_{BD} = 4162.03 \text{ N}$$

Subsequently, the free-body diagram of the entire frame shown in Fig. b will be considered.

$$\circlearrowleft + \Sigma M_A = 0; \quad F_{CF} \sin 30°(1.8) - 150(9.81)(1.2) = 0 \qquad F_{CF} = 1962 \text{ N}$$

$$\overset{+}{\rightarrow} \Sigma F_x = 0; \quad A_x - 1962 \sin 30° = 0 \qquad A_x = 981 \text{ N}$$

$$+\uparrow \Sigma F_y = 0; \quad A_y - 1962 \cos 30° - 150(9.81) = 0 \qquad A_y = 3170.64 \text{ N}$$

Thus, the forces acting on pins D and A are

$$F_D = F_{BD} = 4162.03 \text{ N} \qquad F_A = \sqrt{A_x^2 + A_y^2} = \sqrt{981^2 + 3170.64^2} = 3318.93 \text{ N}$$

Since both pins are in double shear

$$V_D = \frac{F_D}{2} = 2081.02 \text{ N} \qquad V_A = \frac{F_A}{2} = 1659.47 \text{ N}$$

Average Shear Stress: The cross-sectional areas of the shear plane of pins D and A are $A_D = \frac{\pi}{4}(0.01^2) = 78.540(10^{-6}) \text{ m}^2$ and $A_A = \frac{\pi}{4}(0.006^2) = 28.274(10^{-6}) \text{ m}^2$. We obtain

$$(\tau_{avg})_A = \frac{V_A}{A_A} = \frac{1659.47}{28.274(10^{-6})} = 58.7 \text{ MPa} \qquad \textbf{Ans.}$$

$$(\tau_{avg})_D = \frac{V_D}{A_D} = \frac{2081.02}{78.540(10^{-6})} = 26.5 \text{ MPa} \qquad \textbf{Ans.}$$

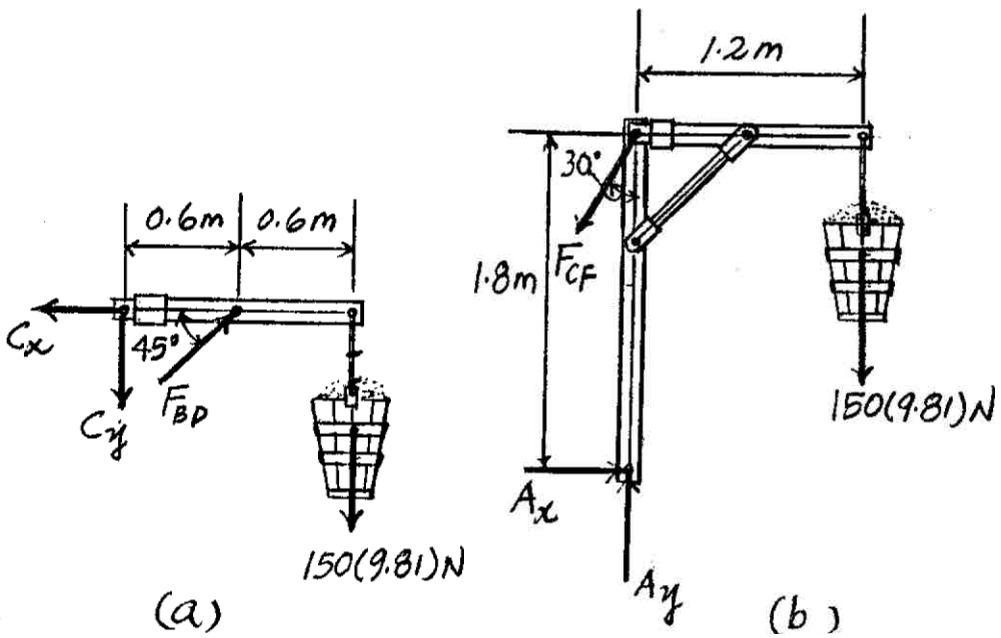

Ans:
$x = 4$ in., $y = 4$ in., $\sigma = 9.26$ psi

1–45. The pedestal has a triangular cross section as shown. If it is subjected to a compressive force of 500 lb, specify the x and y coordinates for the location of point $P(x, y)$, where the load must be applied on the cross section, so that the average normal stress is uniform. Compute the stress and sketch its distribution acting on the cross section at a location removed from the point of load application.

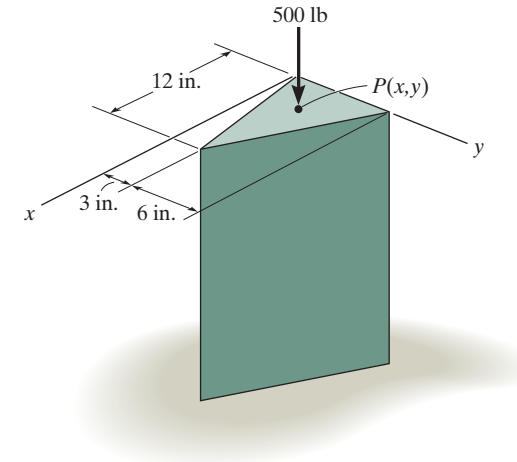

$$x = \frac{\frac{1}{2}(3)(12)\left(\frac{12}{3}\right) + \frac{1}{2}(6)(12)\left(\frac{12}{3}\right)}{\frac{1}{2}(9)(12)} = 4 \text{ in.}$$ **Ans.**

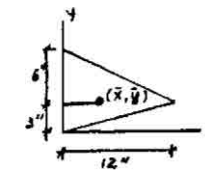

$$y = \frac{\frac{1}{2}(3)(12)(3)\left(\frac{2}{3}\right) + \frac{1}{2}(6)(12)\left(3 + \frac{6}{3}\right)}{\frac{1}{2}(9)(12)} = 4 \text{ in.}$$ **Ans.**

$$\sigma = \frac{P}{A} = \frac{500}{\frac{1}{2}(9)(12)} = 9.26 \text{ psi}$$ **Ans.**

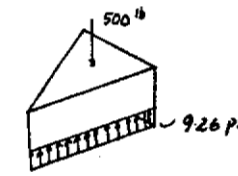

1–46. The 20-kg chandelier is suspended from the wall and ceiling using rods AB and BC, which have diameters of 3 mm and 4 mm, respectively. Determine the angle θ so that the average normal stress in both rods is the same.

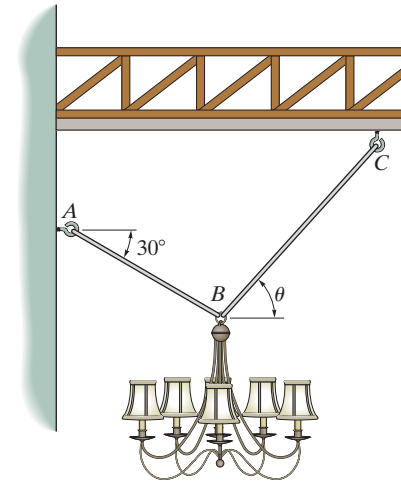

Internal Loadings: The force developed in cables AB and BC can be determined by considering the equilibrium of joint B, Fig. a,

$$\overset{+}{\rightarrow} \Sigma F_x = 0; \qquad F_{BC}\cos\theta - F_{AB}\cos 30^\circ = 0 \tag{1}$$

Average Normal Stress: The cross-sectional areas of cables AB and BC are $A_{AB} = \frac{\pi}{4}(0.003^2) = 7.069(10^{-6})\ \text{m}^2$ and $A_{BC} = \frac{\pi}{4}(0.004^2) = 12.566(10^{-6})\ \text{m}^2$. Since the average normal stress in both cables are required to be the same, then

$$(\sigma_{\text{avg}})_{AB} = (\sigma_{\text{avg}})_{BC}$$

$$\frac{F_{AB}}{A_{AB}} = \frac{F_{BC}}{A_{BC}}$$

$$\frac{F_{AB}}{7.069(10^{-6})} = \frac{F_{BC}}{12.566(10^{-6})}$$

$$F_{AB} = 0.5625F_{BC} \tag{2}$$

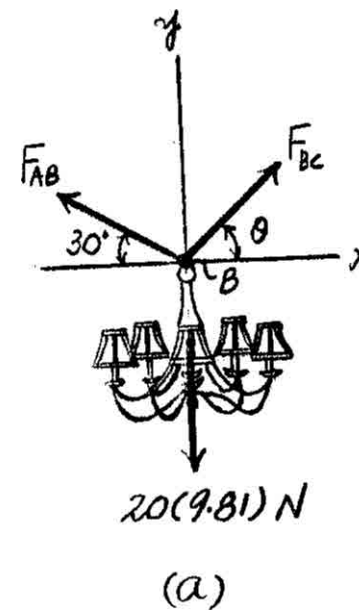

(a)

Substituting Eq. (2) into Eq. (1),

$$F_{BC}(\cos\theta - 0.5625\cos 30^\circ) = 0$$

Since $F_{BC} \neq 0$, then

$$\cos\theta - 0.5625\cos 30^\circ = 0$$

$$\theta = 60.8^\circ \qquad \textbf{Ans.}$$

Ans:
$\theta = 60.8^\circ$

1–47. The chandelier is suspended from the wall and ceiling using rods AB and BC, which have diameters of 3 mm and 4 mm, respectively. If the average normal stress in both rods is not allowed to exceed 150 MPa, determine the largest mass of the chandelier that can be supported if $\theta = 45$.

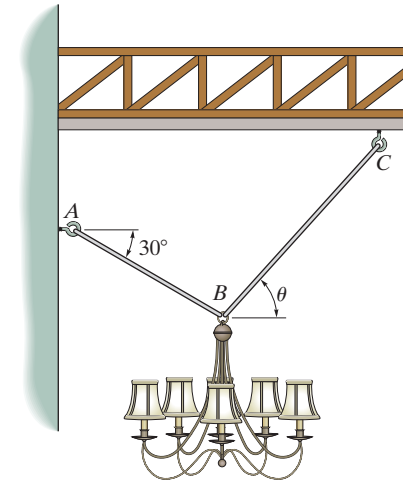

Internal Loadings: The force developed in cables AB and BC can be determined by considering the equilibrium of joint B, Fig. a,

$$\overset{+}{\rightarrow} \Sigma F_x = 0; \qquad F_{BC} \cos 45° - F_{AB} \cos 30° = 0 \qquad (1)$$

$$+\uparrow \Sigma F_y = 0; \qquad F_{BC} \sin 45° + F_{AB} \sin 30° - m(9.81) = 0 \qquad (2)$$

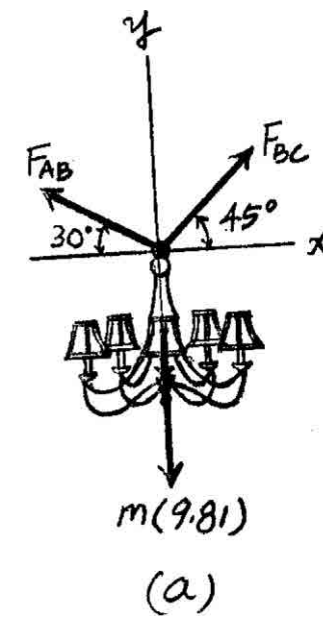

Solving Eqs. (1) and (2) yields

$$F_{AB} = 7.181m \qquad F_{BC} = 8.795m$$

Average Normal Stress: The cross-sectional areas of cables AB and BC are $A_{AB} = \frac{\pi}{4}(0.003^2) = 7.069(10^{-6})\ \text{m}^2$ and $A_{BC} = \frac{\pi}{4}(0.004^2) = 12.566(10^{-6})\ \text{m}^2$. We have,

$$(\sigma_{avg})_{allow} = \frac{F_{AB}}{A_{AB}}; \qquad 150(10^6) = \frac{7.181m}{7.069(10^{-6})}$$

$$m = 147.64\ \text{kg} = 148\ \text{kg (controls)} \qquad \textbf{Ans.}$$

$$(\sigma_{avg})_{allow} = \frac{F_{BC}}{A_{BC}}; \qquad 150(10^6) = \frac{8.795m}{12.566(10^{-6})}$$

$$m = 214.31\ \text{kg}$$

Ans:
$m = 148$ kg

***1–48.** The beam is supported by a pin at A and a short link BC. If $P = 15$ kN, determine the average shear stress developed in the pins at A, B, and C. All pins are in double shear as shown, and each has a diameter of 18 mm.

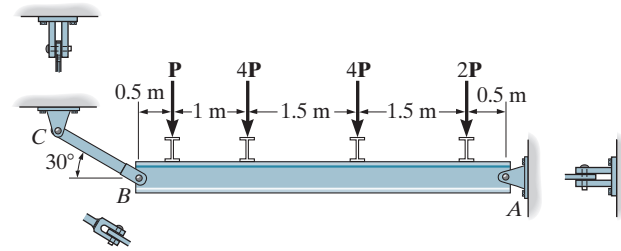

For pins B and C:

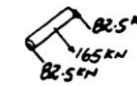

$$\tau_B = \tau_C = \frac{V}{A} = \frac{82.5\,(10^3)}{\frac{\pi}{4}\left(\frac{18}{1000}\right)^2} = 324 \text{ MPa}$$ **Ans.**

For pin A:

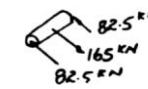

$$F_A = \sqrt{(82.5)^2 + (142.9)^2} = 165 \text{ kN}$$

$$\tau_A = \frac{V}{A} = \frac{82.5\,(10^3)}{\frac{\pi}{4}\left(\frac{18}{1000}\right)^2} = 324 \text{ MPa}$$ **Ans.**

1–49. The joint is subjected to the axial member force of 6 kip. Determine the average normal stress acting on sections AB and BC. Assume the member is smooth and is 1.5-in. thick.

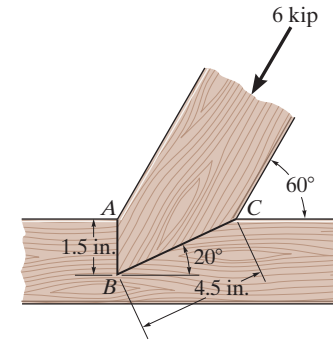

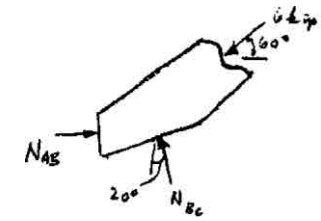

$+\uparrow \Sigma F_y = 0;$ $\quad -6 \sin 60° + N_{BC} \cos 20° = 0$

$N_{BC} = 5.530$ kip

$\overset{+}{\rightarrow} \Sigma F_x = 0;$ $\quad N_{AB} - 6 \cos 60° - 5.530 \sin 20° = 0$

$N_{AB} = 4.891$ kip

$$\sigma_{AB} = \frac{N_{AB}}{A_{AB}} = \frac{4.891}{(1.5)(1.5)} = 2.17 \text{ ksi}$$ **Ans.**

$$\sigma_{BC} = \frac{N_{BC}}{A_{BC}} = \frac{5.530}{(1.5)(4.5)} = 0.819 \text{ ksi}$$ **Ans.**

Ans:
$\sigma_{AB} = 2.17$ ksi, $\sigma_{BC} = 0.819$ ksi

1–50. The driver of the sports car applies his rear brakes and causes the tires to slip. If the normal force on each rear tire is 400 lb and the coefficient of kinetic friction between the tires and the pavement is $\mu_k = 0.5$, determine the average shear stress developed by the friction force on the tires. Assume the rubber of the tires is flexible and each tire is filled with an air pressure of 32 psi.

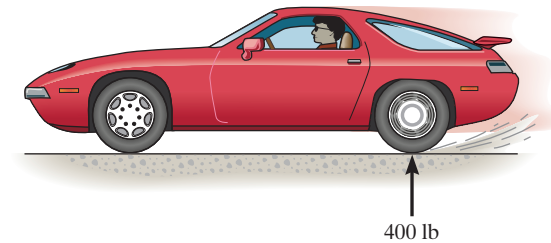

$$F = \mu_k N = 0.5(400) = 200 \text{ lb}$$

$$p = \frac{N}{A}; \quad A = \frac{400}{32} = 12.5 \text{ in}^2$$

$$\tau_{avg} = \frac{F}{A} = \frac{200}{12.5} = 16 \text{ psi}$$ **Ans.**

Ans:
$\tau_{avg} = 16$ psi

1–51. During the tension test, the wooden specimen is subjected to an average normal stress of 2 ksi. Determine the axial force **P** applied to the specimen. Also, find the average shear stress developed along section *a–a* of the specimen.

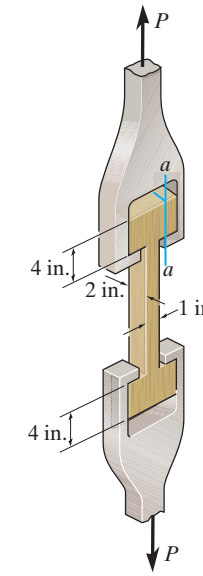

Internal Loading: The normal force developed on the cross section of the middle portion of the specimen can be obtained by considering the free-body diagram shown in Fig. *a*.

$$+\uparrow \Sigma F_y = 0; \qquad \frac{P}{2} + \frac{P}{2} - N = 0 \qquad N = P$$

Referring to the free-body diagram shown in fig. *b*, the shear force developed in the shear plane *a–a* is

$$+\uparrow \Sigma F_y = 0; \qquad \frac{P}{2} - V_{a-a} = 0 \qquad V_{a-a} = \frac{P}{2}$$

Average Normal Stress and Shear Stress: The cross-sectional area of the specimen is $A = 1(2) = 2\ \text{in}^2$. We have

$$\sigma_{\text{avg}} = \frac{N}{A}; \qquad 2(10^3) = \frac{P}{2}$$

$$P = 4(10^3)\text{lb} = 4\ \text{kip} \qquad \textbf{Ans.}$$

Using the result of **P**, $V_{a-a} = \frac{P}{2} = \frac{4(10^3)}{2} = 2(10^3)$ lb. The area of the shear plane is $A_{a-a} = 2(4) = 8\ \text{in}^2$. We obtain

$$\left(\tau_{a-a}\right)_{\text{avg}} = \frac{V_{a-a}}{A_{a-a}} = \frac{2(10^3)}{8} = 250\ \text{psi} \qquad \textbf{Ans.}$$

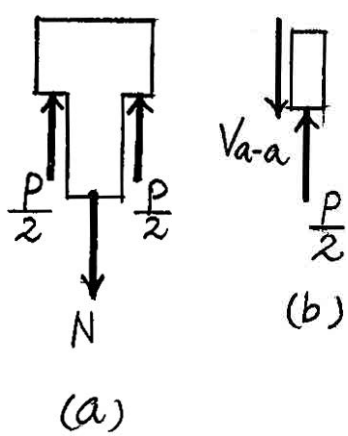

Ans:
$P = 4$ kip, $\left(\tau_{a-a}\right)_{\text{avg}} = 250$ psi

***1–52.** If the joint is subjected to an axial force of $P = 9$ kN, determine the average shear stress developed in each of the 6-mm diameter bolts between the plates and the members and along each of the four shaded shear planes.

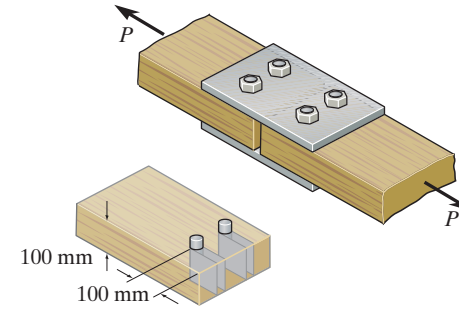

Internal Loadings: The shear force developed on each shear plane of the bolt and the member can be determined by writing the force equation of equilibrium along the member's axis with reference to the free-body diagrams shown in Figs. *a*. and *b*, respectively.

$\Sigma F_y = 0; \quad 4V_b - 9 = 0 \qquad\qquad V_b = 2.25 \text{ kN}$

$\Sigma F_y = 0; \quad 4V_p - 9 = 0 \qquad\qquad V_p = 2.25 \text{ kN}$

Average Shear Stress: The areas of each shear plane of the bolt and the member are $A_b = \frac{\pi}{4}(0.006^2) = 28.274(10^{-6}) \text{ m}^2$ and $A_p = 0.1(0.1) = 0.01 \text{ m}^2$, respectively. We obtain

$$\left(\tau_{\text{avg}}\right)_b = \frac{V_b}{A_b} = \frac{2.25(10^3)}{28.274(10^{-6})} = 79.6 \text{ MPa} \qquad \textbf{Ans.}$$

$$\left(\tau_{\text{avg}}\right)_p = \frac{V_p}{A_p} = \frac{2.25(10^3)}{0.01} = 225 \text{ kPa} \qquad \textbf{Ans.}$$

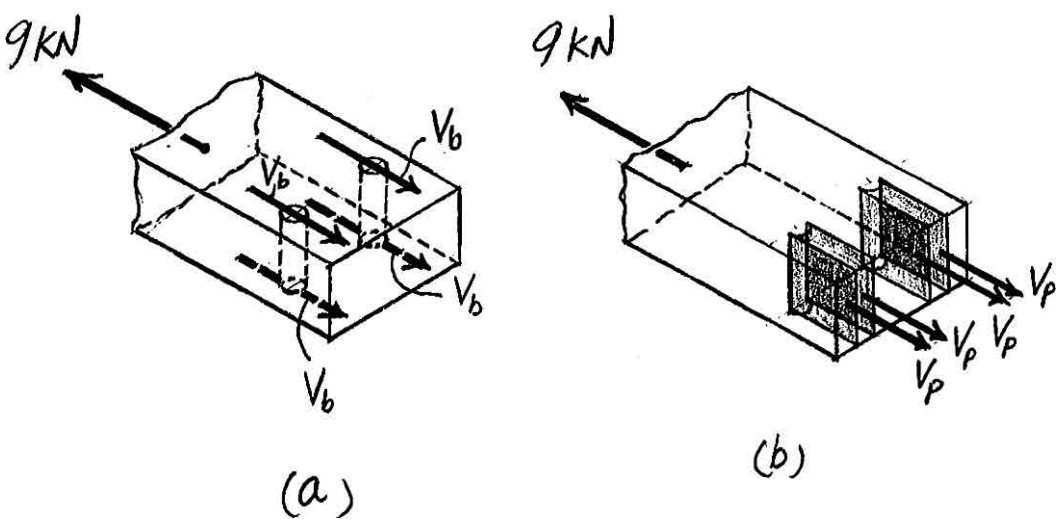

1–53. The average shear stress in each of the 6-mm diameter bolts and along each of the four shaded shear planes is not allowed to exceed 80 MPa and 500 kPa, respectively. Determine the maximum axial force **P** that can be applied to the joint.

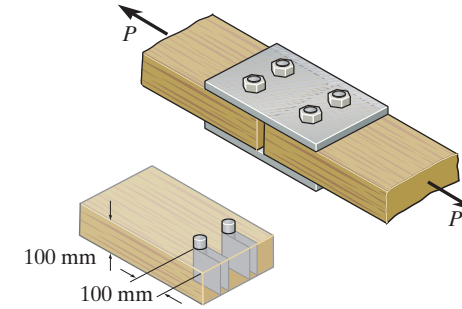

Internal Loadings: The shear force developed on each shear plane of the bolt and the member can be determined by writing the force equation of equilibrium along the member's axis with reference to the free-body diagrams shown in Figs. *a*. and *b*, respectively.

$$\Sigma F_y = 0; \qquad 4V_b - P = 0 \qquad\qquad V_b = P/4$$

$$\Sigma F_y = 0; \qquad 4V_p - P = 0 \qquad\qquad V_p = P/4$$

Average Shear Stress: The areas of each shear plane of the bolts and the members are $A_b = \frac{\pi}{4}(0.006^2) = 28.274(10^{-6})\ \text{m}^2$ and $A_p = 0.1(0.1) = 0.01\ \text{m}^2$, respectively. We obtain

$$\left(\tau_{\text{allow}}\right)_b = \frac{V_b}{A_b}; \qquad 80(10^6) = \frac{P/4}{28.274(10^{-6})}$$

$$P = 9047\ \text{N} = 9.05\ \text{kN (controls)} \qquad \textbf{Ans.}$$

$$\left(\tau_{\text{allow}}\right)_p = \frac{V_p}{A_p}; \qquad 500(10^3) = \frac{P/4}{0.01}$$

$$P = 20\,000\ \text{N} = 20\ \text{kN}$$

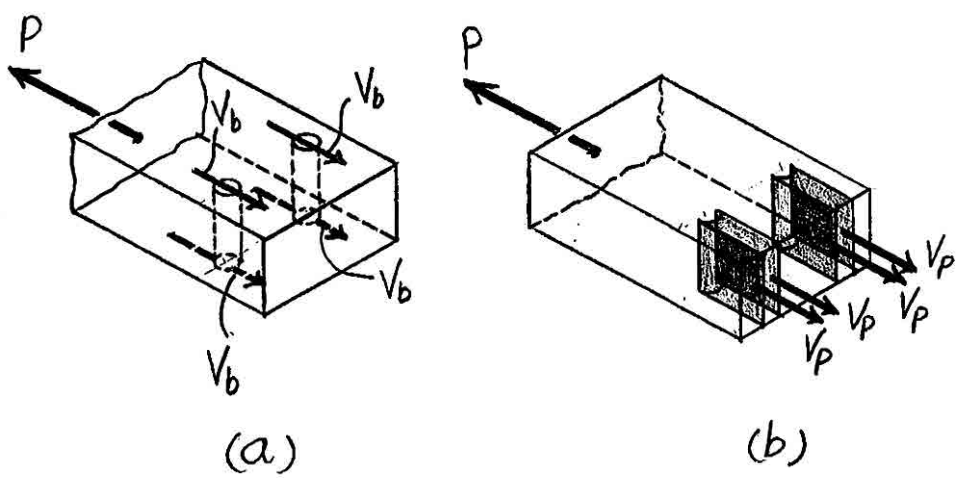

Ans:
$P = 9.05$ kN

1–54. When the hand is holding the 5-lb stone, the humerus H, assumed to be smooth, exerts normal forces F_C and F_A on the radius C and ulna A, respectively, as shown. If the smallest cross-sectional area of the ligament at B is 0.30 in^2, determine the greatest average tensile stress to which it is subjected.

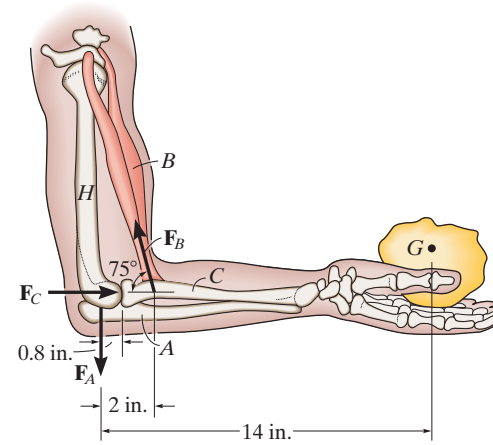

$$\circlearrowleft + \Sigma M_O = 0; \quad F_B \sin 75°(2) - 5(14) = 0$$

$$F_B = 36.235 \text{ lb}$$

$$\sigma = \frac{P}{A} = \frac{36.235}{0.30} = 121 \text{ psi}$$ **Ans.**

Ans:
$\sigma = 121$ psi

1–55. The 2-Mg concrete pipe has a center of mass at point G. If it is suspended from cables AB and AC, determine the average normal stress developed in the cables. The diameters of AB and AC are 12 mm and 10 mm, respectively.

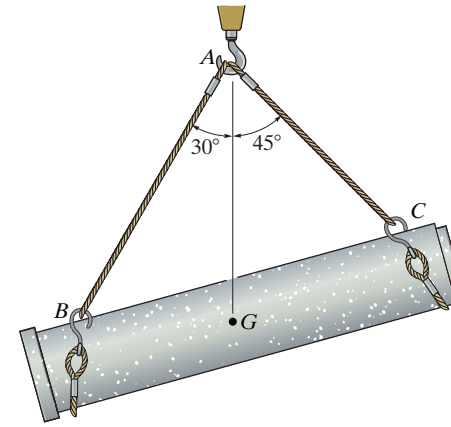

Internal Loadings: The normal force developed in cables AB and AC can be determined by considering the equilibrium of the hook for which the free-body diagram is shown in Fig. a.

$\Sigma F_{x'} = 0;\quad 2000(9.81)\cos 45° - F_{AB}\cos 15° = 0 \qquad F_{AB} = 14\,362.83 \text{ N (T)}$

$\Sigma F_{y'} = 0;\quad 2000(9.81)\sin 45° - 14\,362.83\sin 15° - F_{AC} = 0 \quad F_{AC} = 10\,156.06 \text{ N (T)}$

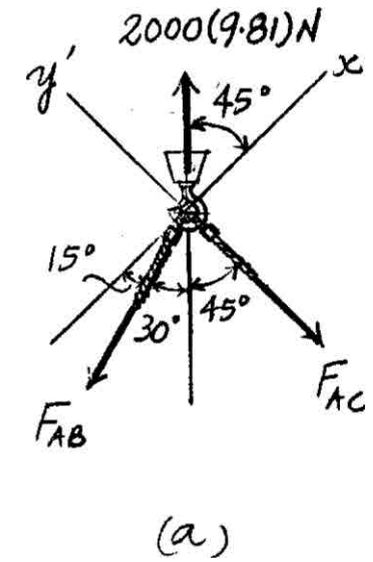

Average Normal Stress: The cross-sectional areas of cables AB and AC are $A_{AB} = \frac{\pi}{4}(0.012^2) = 0.1131(10^{-3})\text{ m}^2$ and $A_{AC} = \frac{\pi}{4}(0.01^2) = 78.540(10^{-6})\text{ m}^2$. We have,

$$\sigma_{AB} = \frac{F_{AB}}{A_{AB}} = \frac{14\,362.83}{0.1131(10^{-3})} = 127 \text{ MPa} \qquad \textbf{Ans.}$$

$$\sigma_{AC} = \frac{F_{AC}}{A_{AC}} = \frac{10\,156.06}{78.540(10^{-6})} = 129 \text{ MPa} \qquad \textbf{Ans.}$$

Ans:
$\sigma_{AB} = 127$ MPa, $\sigma_{AC} = 129$ MPa

***1–56.** The 2-Mg concrete pipe has a center of mass at point G. If it is suspended from cables AB and AC, determine the diameter of cable AB so that the average normal stress developed in this cable is the same as in the 10-mm diameter cable AC.

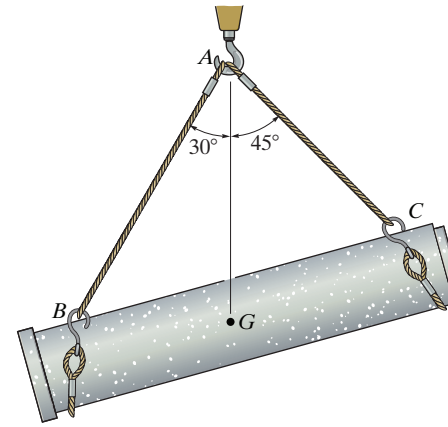

Internal Loadings: The normal force in cables AB and AC can be determined by considering the equilibrium of the hook for which the free-body diagram is shown in Fig. a.

$\Sigma F_{x'} = 0;\ \ 2000(9.81)\cos 45° - F_{AB}\cos 15° = 0$ $\qquad F_{AB} = 14\,362.83\text{ N (T)}$

$\Sigma F_{y'} = 0;\ \ 2000(9.81)\sin 45° - 14\,362.83\sin 15° - F_{AC} = 0$ $\qquad F_{AC} = 10\,156.06\text{ N (T)}$

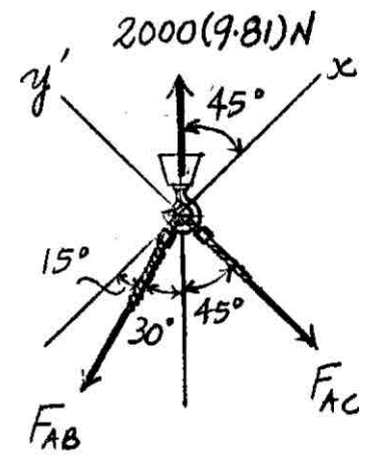

(a)

Average Normal Stress: The cross-sectional areas of cables AB and AC are $A_{AB} = \frac{\pi}{4}d_{AB}^2$ and $A_{AC} = \frac{\pi}{4}(0.01^2) = 78.540(10^{-6})\text{ m}^2$.

Here, we require

$$\sigma_{AB} = \sigma_{AC}$$

$$\frac{F_{AB}}{A_{AB}} = \frac{F_{AC}}{A_{AC}}$$

$$\frac{14\,362.83}{\frac{\pi}{4}d_{AB}^2} = \frac{10\,156.06}{78.540(10^{-6})}$$

$$d_{AB} = 0.01189\text{ m} = 11.9\text{ mm}$$ **Ans.**

1–57. If the concrete pedestal has a specific weight of γ, determine the average normal stress developed in the pedestal as a function of z.

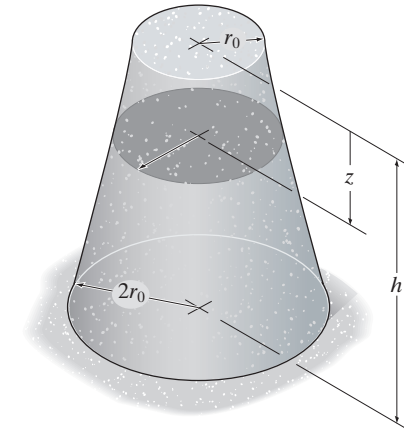

Internal Loading: From the geometry shown in Fig. *a*,

$$\frac{h'}{r_0} = \frac{h' + h}{2r_0}; \qquad h' = h$$

and then

$$\frac{r}{z + h} = \frac{r_0}{h}; \qquad r = \frac{r_0}{h}(z + h)$$

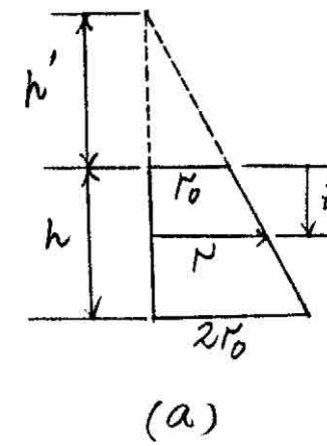

Thus, the volume of the frustrum shown in Fig. *b* is

$$V = \frac{1}{3}\left\{\pi\left[\frac{r_0}{h}(z + h)\right]^2\right\}(z + h) - \frac{1}{3}\left(\pi r_0^2\right)h$$

$$= \frac{\pi r_0^2}{3h^2}\left[(z + h)^3 - h^3\right]$$

The weight of this frustrum is

$$W = \gamma V = \frac{\pi r_0^2 \gamma}{3h^2}\left[(z + h)^3 - h^3\right]$$

Average Normal Stress: The cross-sectional area the frustrum as a function of z is $A = \pi r^2 = \frac{\pi r_0^2}{h^2}(z + h)^2$.

Also, the normal force acting on this cross section is $N = W$, Fig. *b*. We have

$$\sigma_{avg} = \frac{N}{A} = \frac{\frac{\pi r_0^2 \gamma}{3h^2}[(z + h)^3 - h^3]}{\frac{\pi r_0^2}{h^2}(z + h)^2} = \frac{\gamma}{3}\left[\frac{(z + h)^3 - h^3}{(z + h)^2}\right] \qquad \textbf{Ans.}$$

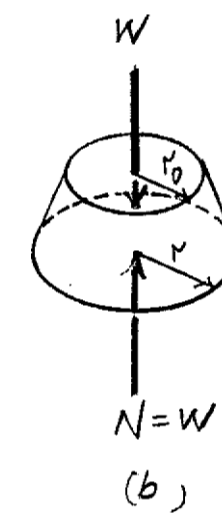

Ans:

$$\sigma_{avg} = \frac{\gamma}{3}\left[\frac{(z + h)^3 - h^3}{(z + h)^2}\right]$$

1–58. The anchor bolt was pulled out of the concrete wall and the failure surface formed part of a frustum and cylinder. This indicates a shear failure occurred along the cylinder BC and tension failure along the frustum AB. If the shear and normal stresses along these surfaces have the magnitudes shown, determine the force **P** that must have been applied to the bolt.

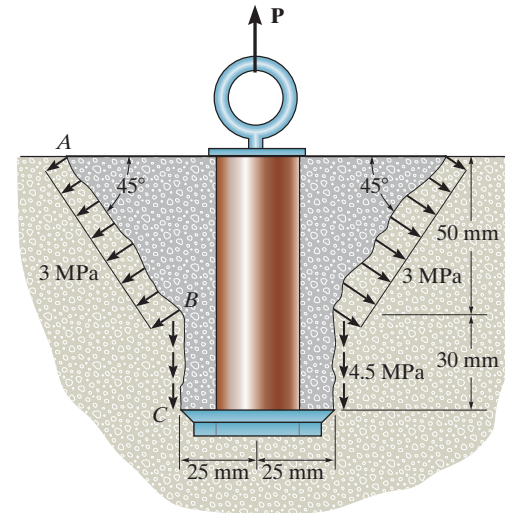

Average Normal Stress:

For the frustum, $A = 2\pi\bar{x}L = 2\pi(0.025 + 0.025)\left(\sqrt{0.05^2 + 0.05^2}\right)$

$$= 0.02221 \text{ m}^2$$

$$\sigma = \frac{P}{A}; \qquad 3\left(10^6\right) = \frac{F_1}{0.02221}$$

$$F_1 = 66.64 \text{ kN}$$

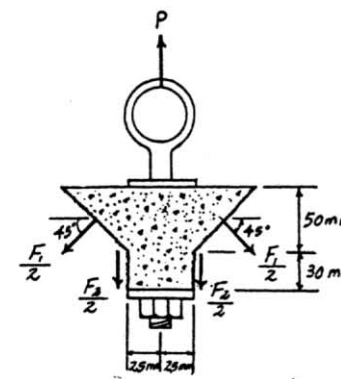

Average Shear Stress:

For the cylinder, $A = \pi(0.05)(0.03) = 0.004712 \text{ m}^2$

$$\tau_{avg} = \frac{V}{A}; \qquad 4.5\left(10^6\right) = \frac{F_2}{0.004712}$$

$$F_2 = 21.21 \text{ kN}$$

Equation of Equilibrium:

$$+\uparrow \Sigma F_y = 0; \qquad P - 21.21 - 66.64 \sin 45° = 0$$

$$P = 68.3 \text{ kN}$$ **Ans.**

Ans:
$P = 68.3$ kN

1–59. The jib crane is pinned at A and supports a chain hoist that can travel along the bottom flange of the beam, 1 ft $\leq x \leq$ 12 ft. If the hoist is rated to support a maximum of 1500 lb, determine the maximum average normal stress in the $\frac{3}{4}$-in. diameter tie rod BC and the maximum average shear stress in the $\frac{5}{8}$-in. -diameter pin at B.

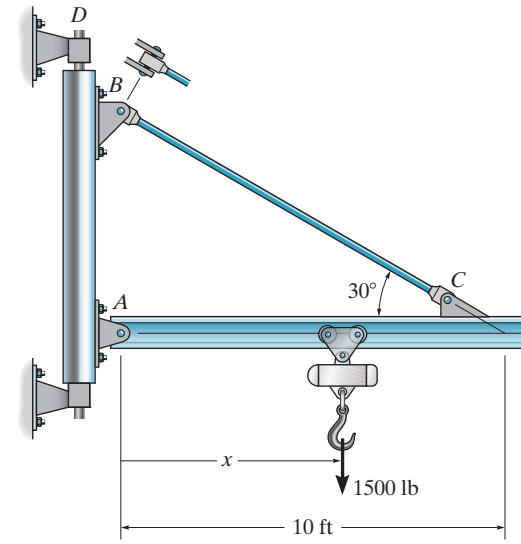

$$\circlearrowleft + \Sigma M_A = 0; \qquad T_{BC} \sin 30°(10) - 1500(x) = 0$$

Maximum T_{BC} occurs when $x = 12$ ft

$$T_{BC} = 3600 \text{ lb}$$

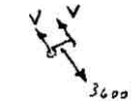

$$\sigma = \frac{P}{A} = \frac{3600}{\frac{\pi}{4}(0.75)^2} = 8.15 \text{ ksi}$$ **Ans.**

$$\tau = \frac{V}{A} = \frac{3600/2}{\frac{\pi}{4}(5/8)^2} = 5.87 \text{ ksi}$$ **Ans.**

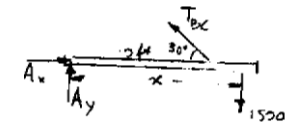

Ans:
$\sigma = 8.15$ ksi, $\tau = 5.87$ ksi

***1–60.** If the shaft is subjected to an axial force of 5 kN, determine the bearing stress acting on the collar A.

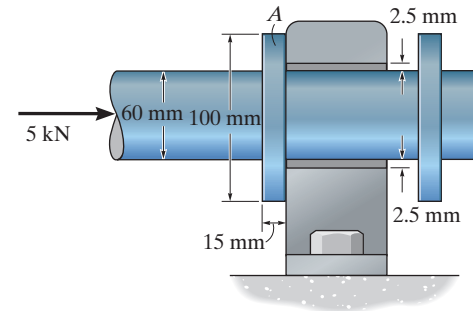

Bearing Stress: The bearing area on the collar, shown shaded in Fig. a, is $A_b = \pi\left(0.05^2 - 0.0325^2\right) = 4.536(10^{-3})\ \text{m}^2$. Referring to the free-body diagram of the collar, Fig. a, and writing the force equation of equilibrium along the axis of the shaft,

$$\Sigma F_y = 0; \qquad 5(10^3) - \sigma_b\left[4.536(10^{-3})\right] = 0$$

$$\sigma_b = 1.10\ \text{MPa} \qquad \textbf{Ans.}$$

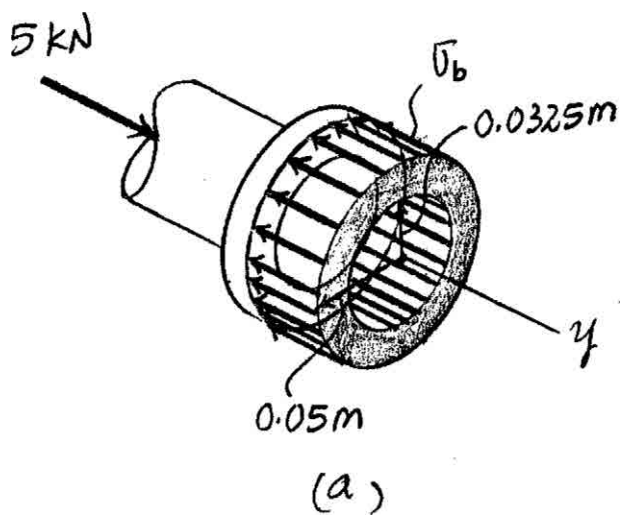

1–61. If the 60-mm diameter shaft is subjected to an axial force of 5 kN, determine the average shear stress developed in the shear plane where the collar A and shaft are connected.

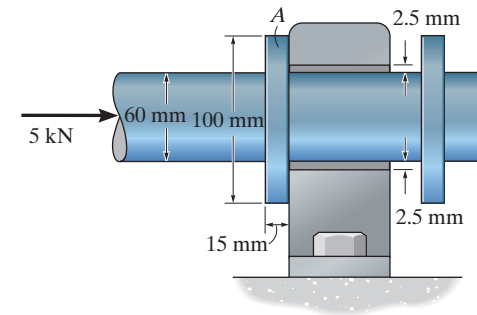

Average Shear Stress: The area of the shear plane, shown shaded in Fig. a, is $A = 2\pi(0.03)(0.015) = 2.827(10^{-3})\text{m}^2$. Referring to the free-body diagram of the shaft, Fig. a, and writing the force equation of equilibrium along the axis of the shaft,

$$\Sigma F_y = 0;\ 5(10^3) - \tau_{avg}\left[2.827(10^{-3})\right] = 0$$

$$\tau_{avg} = 1.77 \text{ MPa} \qquad \textbf{Ans.}$$

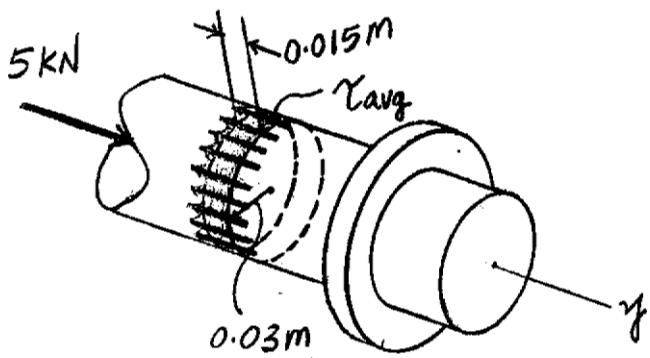

(a)

Ans:
$\tau_{avg} = 1.77$ MPa

1–62. The crimping tool is used to crimp the end of the wire E. If a force of 20 lb is applied to the handles, determine the average shear stress in the pin at A. The pin is subjected to double shear and has a diameter of 0.2 in. Only a vertical force is exerted on the wire.

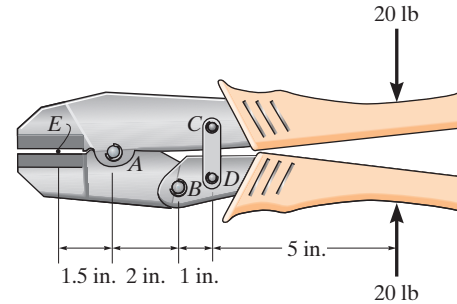

Support Reactions:

From FBD(a)

$\circlearrowleft + \Sigma M_D = 0; \qquad 20(5) - B_y(1) = 0 \qquad B_y = 100 \text{ lb}$

$\overset{+}{\rightarrow} \Sigma F_x = 0; \qquad B_x = 0$

From FBD(b)

$\overset{+}{\rightarrow} \Sigma F_x = 0; \qquad A_x = 0$

$\circlearrowleft + \Sigma M_E = 0; \qquad A_y(1.5) - 100(3.5) = 0$

$A_y = 233.33 \text{ lb}$

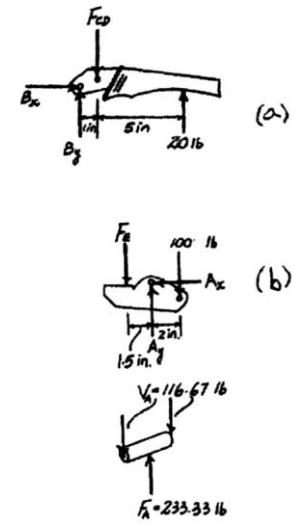

Average Shear Stress: Pin A is subjected to double shear. Hence,

$$V_A = \frac{F_A}{2} = \frac{A_y}{2} = 116.67 \text{ lb}$$

$$(\tau_A)_{avg} = \frac{V_A}{A_A} = \frac{116.67}{\frac{\pi}{4}(0.2^2)}$$

$$= 3714 \text{ psi} = 3.71 \text{ ksi} \qquad \textbf{Ans.}$$

Ans:
$(\tau_A)_{avg} = 3.71$ ksi

1–63. Solve Prob. 1–62 for pin B. The pin is subjected to double shear and has a diameter of 0.2 in.

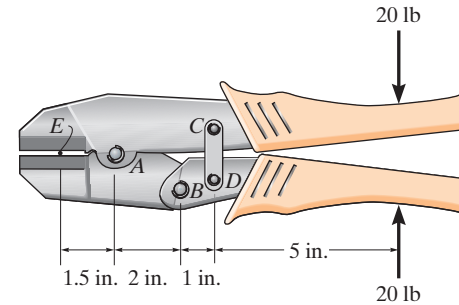

Support Reactions:

From FBD(a)

$\circlearrowleft + \Sigma M_D = 0; \qquad 20(5) - B_y(1) = 0 \qquad B_y = 100 \text{ lb}$

$\overset{+}{\rightarrow} \Sigma F_x = 0; \qquad B_x = 0$

Average Shear Stress: Pin B is subjected to double shear. Hence,

$$V_B = \frac{F_B}{2} = \frac{B_y}{2} = 50.0 \text{ lb}$$

$$(\tau_B)_{\text{avg}} = \frac{V_B}{A_B} = \frac{50.0}{\frac{\pi}{4}(0.2^2)}$$

$$= 1592 \text{ psi} = 1.59 \text{ ksi} \qquad \textbf{Ans.}$$

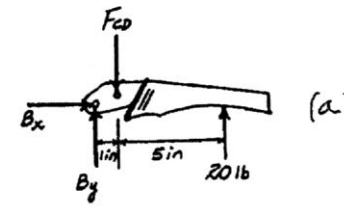

Ans:
$(\tau_B)_{\text{avg}} = 1.59$ ksi

***1–64.** A vertical force of $P = 1500$ N is applied to the bell crank. Determine the average normal stress developed in the 10-mm diameter rod CD, and the average shear stress developed in the 6-mm diameter pin B that is subjected to double shear.

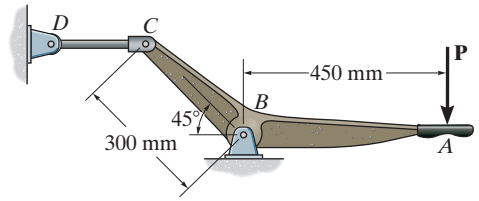

Internal Loading: Referring to the free-body diagram of the bell crank shown in Fig. *a*,

$\circlearrowleft + \Sigma M_B = 0;\quad F_{CD}(0.3 \sin 45°) - 1500(0.45) = 0 \qquad F_{CD} = 3181.98$ N

$\overset{+}{\rightarrow} \Sigma F_x = 0;\quad B_x - 3181.98 = 0 \qquad B_x = 3181.98$ N

$+\uparrow \Sigma F_y = 0;\quad B_y - 1500 = 0 \qquad B_y = 1500$ N

Thus, the force acting on pin B is

$F_B = \sqrt{B_x^2 + B_y^2} = \sqrt{3181.98^2 + 1500^2} = 3517.81$ N

Pin B is in double shear. Referring to its free-body diagram, Fig. *b*,

$$V_B = \frac{F_B}{2} = \frac{3517.81}{2} = 1758.91 \text{ N}$$

Average Normal and Shear Stress: The cross-sectional area of rod CD is $A_{CD} = \frac{\pi}{4}(0.01^2) = 78.540(10^{-6})\,\text{m}^2$, and the area of the shear plane of pin B is $A_B = \frac{\pi}{4}(0.006^2) = 28.274(10^{-6})\,\text{m}^2$. We obtain

$$(\sigma_{\text{avg}})_{CD} = \frac{F_{CD}}{A_{CD}} = \frac{3181.98}{78.540(10^{-6})} = 40.5 \text{ MPa} \qquad \textbf{Ans.}$$

$$(\tau_{\text{avg}})_B = \frac{V_B}{A_B} = \frac{1758.91}{28.274(10^{-6})} = 62.2 \text{ MPa} \qquad \textbf{Ans.}$$

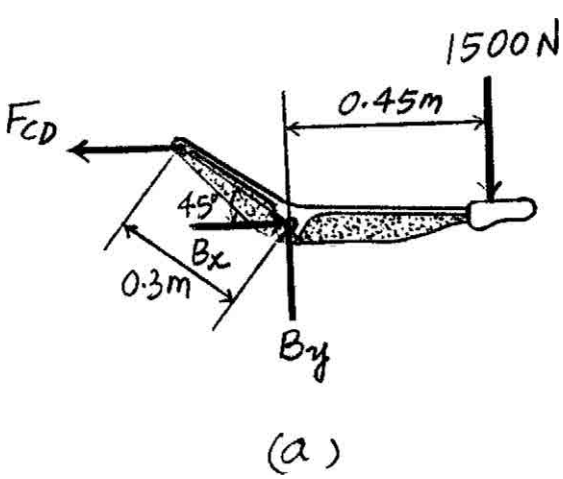

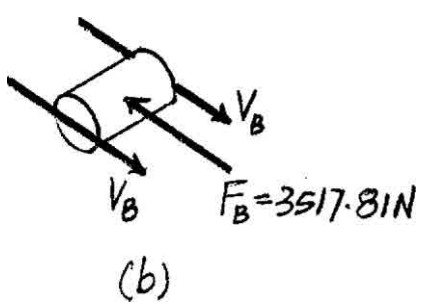

1–65. Determine the maximum vertical force **P** that can be applied to the bell crank so that the average normal stress developed in the 10-mm diameter rod *CD*, and the average shear stress developed in the 6-mm diameter double sheared pin *B* not exceed 175 MPa and 75 MPa, respectively.

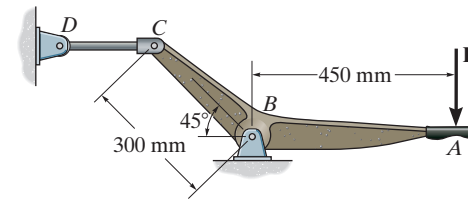

Internal Loading: Referring to the free-body diagram of the bell crank shown in Fig. *a*,

$\circlearrowleft + \Sigma M_B = 0;\qquad F_{CD}(0.3 \sin 45°) - P(0.45) = 0 \qquad F_{CD} = 2.121P$

$\overset{+}{\rightarrow} \Sigma F_x = 0;\qquad B_x - 2.121P = 0 \qquad B_x = 2.121P$

$+\uparrow \Sigma F_y = 0;\qquad B_y - P = 0 \qquad B_y = P$

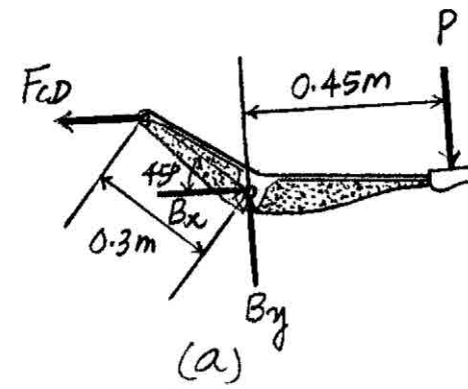

Thus, the force acting on pin *B* is

$$F_B = \sqrt{B_x^2 + B_y^2} = \sqrt{(2.121P)^2 + P^2} = 2.345P$$

Pin *B* is in double shear. Referring to its free-body diagram, Fig. *b*,

$$V_B = \frac{F_B}{2} = \frac{2.345P}{2} = 1.173P$$

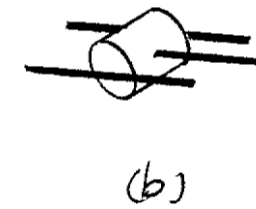

Average Normal and Shear Stress: The cross-sectional area of rod *CD* is $A_{CD} = \frac{\pi}{4}(0.01^2) = 78.540(10^{-6})\,\text{m}^2$, and the area of the shear plane of pin *B* is $A_B = \frac{\pi}{4}(0.006^2) = 28.274(10^{-6})\,\text{m}^2$. We obtain

$$(\sigma_{avg})_{allow} = \frac{F_{CD}}{A_{CD}};\qquad 175(10^6) = \frac{2.121P}{78.540(10^{-6})}$$
$$P = 6479.20\text{ N} = 6.48\text{ kN}$$

$$(\tau_{avg})_{allow} = \frac{V_B}{A_B};\qquad 75(10^6) = \frac{1.173P}{28.274(10^{-6})}$$
$$P = 1808.43\text{ N} = 1.81\text{ kN (controls)} \qquad \textbf{Ans.}$$

Ans:
$P = 1.81$ kN

1–66. Determine the largest load **P** that can be applied to the frame without causing either the average normal stress or the average shear stress at section *a–a* to exceed $\sigma = 150$ MPa and $\tau = 60$ MPa, respectively. Member *CB* has a square cross section of 25 mm on each side.

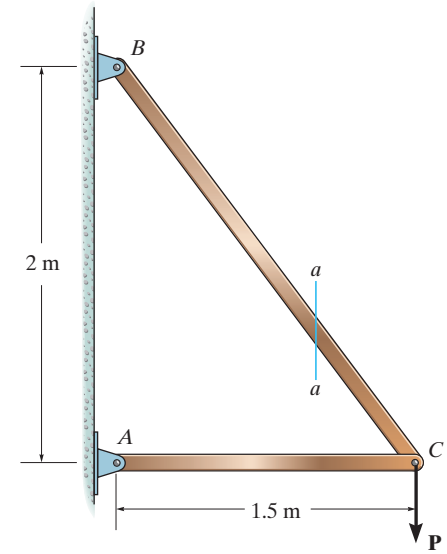

Analyze the equilibrium of joint *C* using the FBD Shown in Fig. *a*,

$$+\uparrow \Sigma F_y = 0; \qquad F_{BC}\left(\frac{4}{5}\right) - P = 0 \qquad F_{BC} = 1.25P$$

Referring to the FBD of the cut segment of member *BC* Fig. *b*.

$$\overset{+}{\rightarrow} \Sigma F_x = 0; \qquad N_{a-a} - 1.25P\left(\frac{3}{5}\right) = 0 \qquad N_{a-a} = 0.75P$$

$$+\uparrow \Sigma F_y = 0; \qquad 1.25P\left(\frac{4}{5}\right) - V_{a-a} = 0 \qquad V_{a-a} = P$$

The cross-sectional area of section *a–a* is $A_{a-a} = (0.025)\left(\frac{0.025}{3/5}\right) = 1.0417(10^{-3})\ \text{m}^2$. For Normal stress,

$$\sigma_{\text{allow}} = \frac{N_{a-a}}{A_{a-a}}; \qquad 150(10^6) = \frac{0.75P}{1.0417(10^{-3})}$$

$$P = 208.33(10^3)\ \text{N} = 208.33\ \text{kN}$$

For Shear Stress

$$\tau_{\text{allow}} = \frac{V_{a-a}}{A_{a-a}}; \qquad 60(10^6) = \frac{P}{1.0417(10^{-3})}$$

$P = 62.5(10^3)\ \text{N} = 62.5\ \text{kN}$ (Controls!) **Ans.**

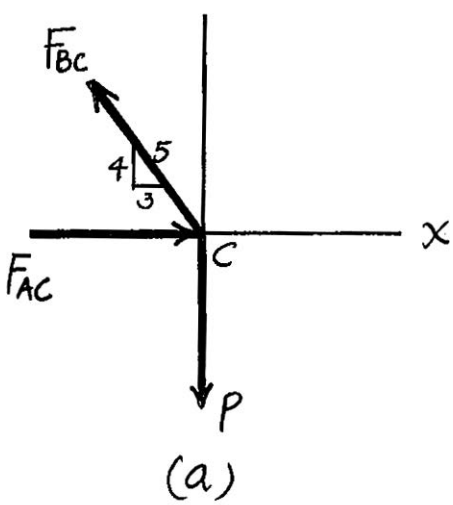

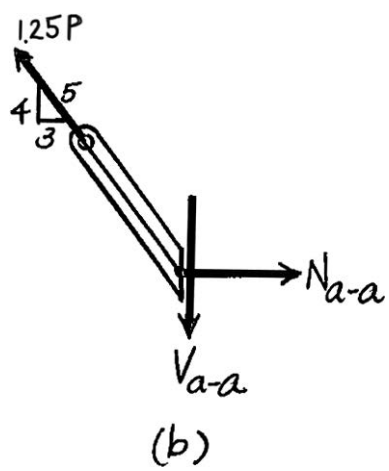

Ans:
$P = 62.5$ kN

1–67. The pedestal in the shape of a frustum of a cone is made of concrete having a specific weight of 150 lb/ft^3. Determine the average normal stress acting in the pedestal at its base. *Hint:* The volume of a cone of radius r and height h is $V = \frac{1}{3}\pi r^2 h$.

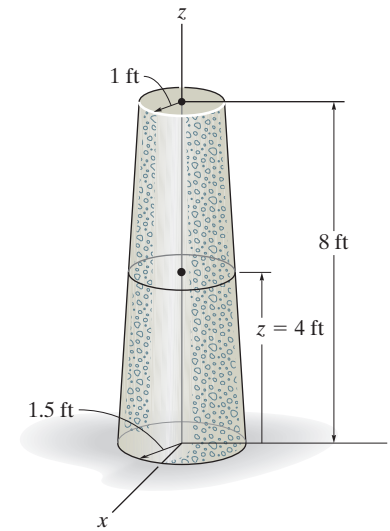

$$\frac{h}{1.5} = \frac{h-8}{1}, \qquad h = 24 \text{ ft}$$

$$V = \frac{1}{3}\pi\,(1.5)^2(24) - \frac{1}{3}\pi\,(1)^2(16); \qquad V = 39.794 \text{ ft}^3$$

$$W = 150(39.794) = 5.969 \text{ kip}$$

$$\sigma = \frac{P}{A} = \frac{5.969}{\pi(1.5)^2} = 844 \text{ psf} = 5.86 \text{ psi}$$

Ans.

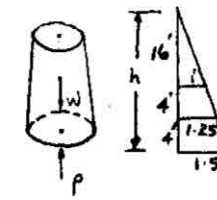

Ans:
$\sigma = 5.86$ psi

***1–68.** The pedestal in the shape of a frustum of a cone is made of concrete having a specific weight of 150 lb/ft^3. Determine the average normal stress acting in the pedestal at its midheight, $z = 4$ ft. *Hint*: The volume of a cone of radius r and height h is $V = \frac{1}{3}\pi r^2 h$.

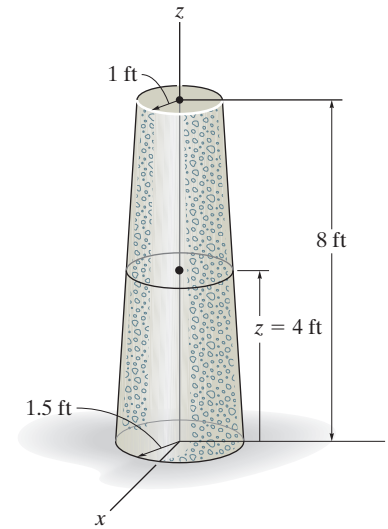

$$\frac{h}{1.5} = \frac{h-8}{1}, \quad h = 24 \text{ ft}$$

$$W = \left[\frac{1}{3}\pi(1.25)^2 20 - \frac{1}{3}(\pi)(1^2)(16)\right](150) = 2395.5 \text{ lb}$$

$$+\uparrow \Sigma F_y = 0; \quad P - 2395.5 = 0$$

$$P = 2395.5 \text{ lb}$$

$$\sigma = \frac{P}{A} = \frac{2395.5}{\pi(1.25)^2} = 488 \text{ psf} = 3.39 \text{ psi}$$ **Ans.**

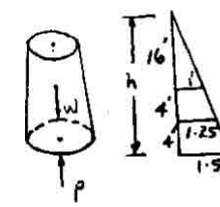

1–69. Member B is subjected to a compressive force of 800 lb. If A and B are both made of wood and are $\frac{3}{8}$ in. thick, determine to the nearest $\frac{1}{4}$ in. the smallest dimension h of the horizontal segment so that it does not fail in shear. The average shear stress for the segment is $\tau_{\text{allow}} = 300$ psi.

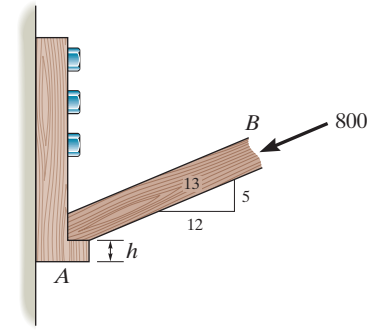

$$\tau_{\text{allow}} = 300 = \frac{307.7}{(\frac{3}{8})\,h}$$

$$h = 2.74 \text{ in.}$$

Use $h = 2\frac{3}{4}$ in. **Ans.**

Ans:
Use $h = 2\frac{3}{4}$ in.

1–70. The lever is attached to the shaft A using a key that has a width d and length of 25 mm. If the shaft is fixed and a vertical force of 200 N is applied perpendicular to the handle, determine the dimension d if the allowable shear stress for the key is $\tau_{\text{allow}} = 35$ MPa.

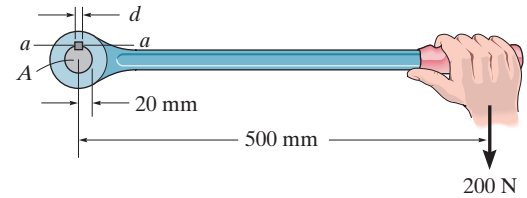

$$\circlearrowleft + \Sigma M_A = 0; \qquad F_{a-a}(20) - 200(500) = 0$$

$$F_{a-a} = 5000 \text{ N}$$

$$\tau_{\text{allow}} = \frac{F_{a-a}}{A_{a-a}}; \qquad 35(10^6) = \frac{5000}{d(0.025)}$$

$$d = 0.00571 \text{ m} = 5.71 \text{ mm}$$ **Ans.**

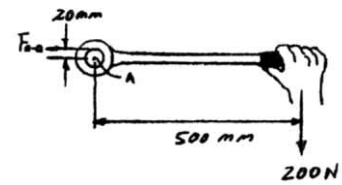

Ans:
$d = 5.71$ mm

1–71. The joint is fastened together using two bolts. Determine the required diameter of the bolts if the failure shear stress for the bolts is $\tau_{fail} = 350$ MPa. Use a factor of safety for shear of F.S. = 2.5.

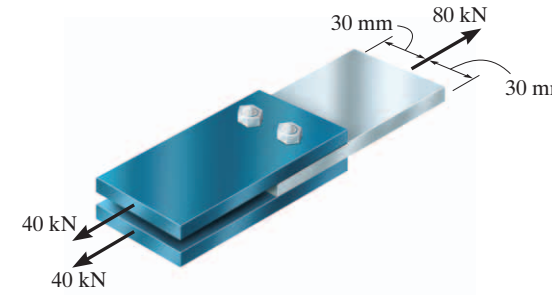

$$\frac{350(10^6)}{2.5} = 140(10^6)$$

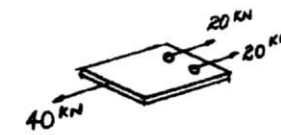

$$\tau_{allow} = 140(10^6) = \frac{20(10^3)}{\frac{\pi}{4} d^2}$$

$d = 0.0135 \text{ m} = 13.5 \text{ mm}$ **Ans.**

Ans:
$d = 13.5$ mm

***1–72.** The truss is used to support the loading shown Determine the required cross-sectional area of member BC if the allowable normal stress is $\sigma_{\text{allow}} = 24$ ksi.

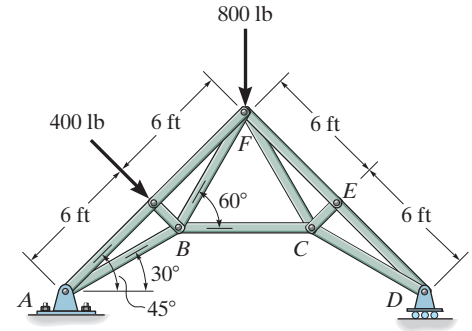

$\circlearrowleft + \Sigma M_A = 0;$ $\quad -400(6) - 800(8.485) + 2(8.485)(D_y) = 0$

$D_y = 541.42$ lb

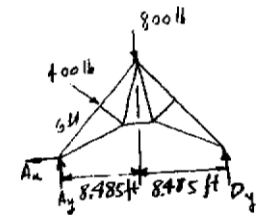

$\circlearrowleft + \Sigma M_F = 0;$ $\quad 541.42(8.485) - F_{BC}(5.379) = 0$

$F_{BC} = 854.01$ lb

$\sigma = \dfrac{P}{A};$ $\quad 24000 = \dfrac{854.01}{A}$

$A = 0.0356 \text{ in}^2$ **Ans.**

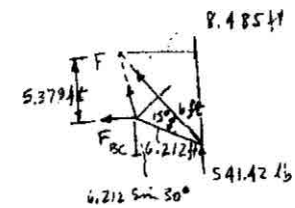

1–73. The steel swivel bushing in the elevator control of an airplane is held in place using a nut and washer as shown in Fig. (*a*). Failure of the washer *A* can cause the push rod to separate as shown in Fig. (*b*). If the maximum average normal stress for the washer is $\sigma_{max} = 60$ ksi and the maximum average shear stress is $\tau_{max} = 21$ ksi, determine the force **F** that must be applied to the bushing that will cause this to happen. The washer is $\frac{1}{16}$ in. thick.

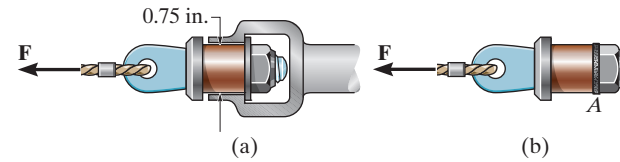

$$\tau_{avg} = \frac{V}{A}; \qquad 21(10^3) = \frac{F}{2\pi(0.375)(\frac{1}{16})}$$

$$F = 3092.5 \text{ lb} = 3.09 \text{ kip}$$ **Ans.**

Ans:
$F = 3.09$ kip

1–74. Member B is subjected to a compressive force of 600 lb. If A and B are both made of wood and are 1.5 in. thick, determine to the nearest $\frac{1}{8}$ in. the smallest dimension a of the support so that the average shear stress along the blue line does not exceed $\tau_{\text{allow}} = 50$ psi. Neglect friction.

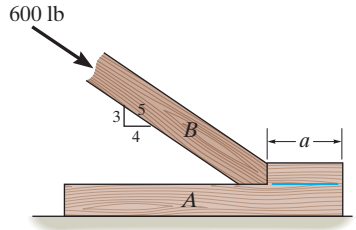

Consider the equilibrium of the FBD of member B, Fig. a,

$$\xrightarrow{+} \Sigma F_x = 0; \qquad 600\left(\frac{4}{5}\right) - F_h = 0 \qquad F_h = 480 \text{ lb}$$

Referring to the FBD of the wood segment sectioned through glue line, Fig. b

$$\xrightarrow{+} \Sigma F_x = 0; \qquad 480 - V = 0 \qquad V = 480 \text{ lb}$$

The area of shear plane is $A = 1.5(a)$. Thus,

$$\tau_{\text{allow}} = \frac{V}{A}; \qquad 50 = \frac{480}{1.5a}$$

$$a = 6.40 \text{ in.}$$

Use $a = 6\frac{1}{2}$ in. **Ans.**

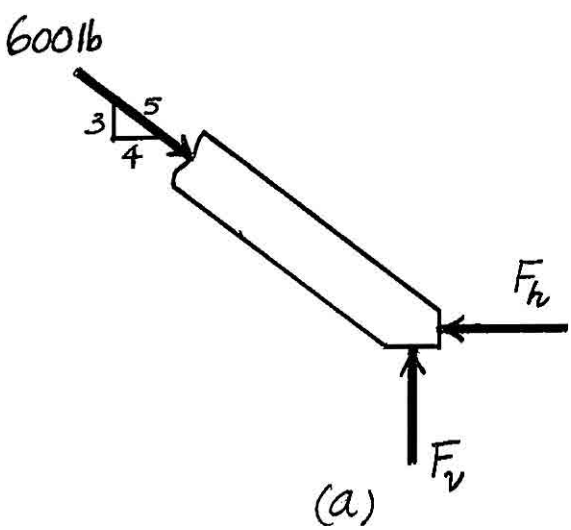

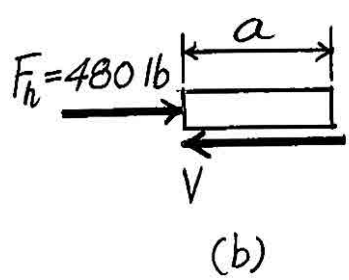

Ans:
Use $a = 6\frac{1}{2}$ in.

1–75. The hangers support the joist uniformly, so that it is assumed the four nails on each hanger carry an equal portion of the load. If the joist is subjected to the loading shown, determine the average shear stress in each nail of the hanger at ends A and B. Each nail has a diameter of 0.25 in. The hangers only support vertical loads.

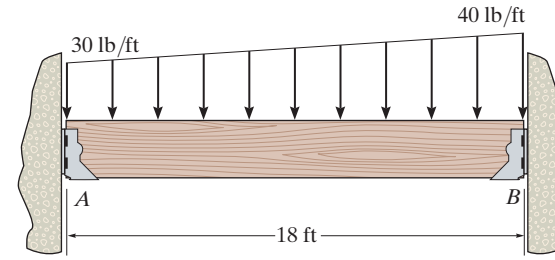

$\circlearrowleft + \Sigma M_A = 0; \qquad F_B(18) - 540(9) - 90(12) = 0; \qquad F_B = 330 \text{ lb}$

$+\uparrow \Sigma F_y = 0; \qquad F_A + 330 - 540 - 90 = 0; \qquad F_A = 300 \text{ lb}$

For nails at A,

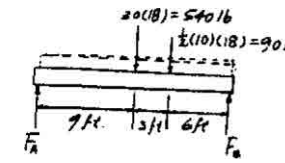

$$\tau_{avg} = \frac{F_A}{A_A} = \frac{300}{4(\frac{\pi}{4})(0.25)^2}$$

$$= 1528 \text{ psi} = 1.53 \text{ ksi}$$ **Ans.**

For nails at B,

$$\tau_{avg} = \frac{F_B}{A_B} = \frac{330}{4(\frac{\pi}{4})(0.25)^2}$$

$$= 1681 \text{ psi} = 1.68 \text{ ksi}$$ **Ans.**

Ans:
For nails at A: $\tau_{avg} = 1.53$ ksi
For nails at B: $\tau_{avg} = 1.68$ ksi

***1–76.** The hangers support the joists uniformly, so that it is assumed the four nails on each hanger carry an equal portion of the load. Determine the smallest diameter of the nails at A and at B if the allowable stress for the nails is $\tau_{\text{allow}} = 4$ ksi. The hangers only support vertical loads.

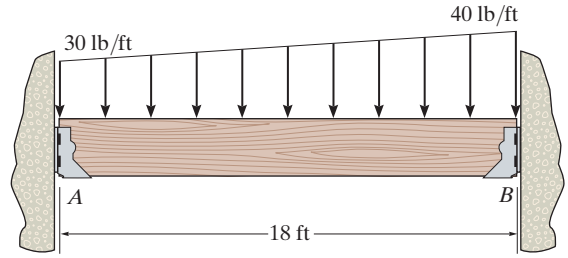

$\circlearrowleft + \Sigma M_A = 0; \qquad F_B(18) - 540(9) - 90(12) = 0; \qquad F_B = 330 \text{ lb}$

$+\uparrow \Sigma F_y = 0; \qquad F_A + 330 - 540 - 90 = 0; \qquad F_A = 300 \text{ lb}$

For nails at A,

$$\tau_{\text{allow}} = \frac{F_A}{A_A}; \qquad 4(10^3) = \frac{300}{4(\frac{\pi}{4})d_A{}^2}$$

$d_A = 0.155$ in. **Ans.**

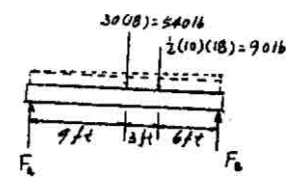

For nails at B,

$$\tau_{\text{allow}} = \frac{F_B}{A_B}; \qquad 4(10^3) = \frac{330}{4(\frac{\pi}{4})d_B{}^2}$$

$d_B = 0.162$ in. **Ans.**

1–77. The tension member is fastened together using *two* bolts, one on each side of the member as shown. Each bolt has a diameter of 0.3 in. Determine the maximum load P that can be applied to the member if the allowable shear stress for the bolts is $\tau_{\text{allow}} = 12$ ksi and the allowable average normal stress is $\sigma_{\text{allow}} = 20$ ksi.

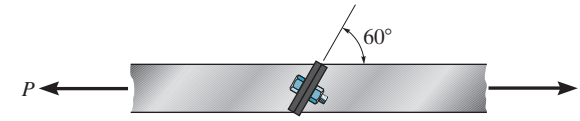

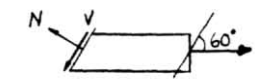

$\nwarrow + \Sigma F_y = 0; \qquad N - P \sin 60° = 0$

$$P = 1.1547\, N \qquad (1)$$

$\swarrow + \Sigma F_x = 0; \qquad V - P \cos 60° = 0$

$$P = 2\, V \qquad (2)$$

Assume failure due to shear:

$$\tau_{\text{allow}} = 12 = \frac{V}{(2)\,\frac{\pi}{4}\,(0.3)^2}$$

$V = 1.696$ kip

From Eq. (2),

$P = 3.39$ kip

Assume failure due to normal force:

$$\sigma_{\text{allow}} = 20 = \frac{N}{(2)\,\frac{\pi}{4}\,(0.3)^2}$$

$N = 2.827$ kip

From Eq. (1),

$P = 3.26$ kip (controls) **Ans.**

Ans:
$P = 3.26$ kip

1–78. The 50-kg flowerpot is suspended from wires AB and BC. If the wires have a normal failure stress of $\sigma_{\text{fail}} = 350$ MPa, determine the minimum diameter of each wire. Use a factor of safety of 2.5.

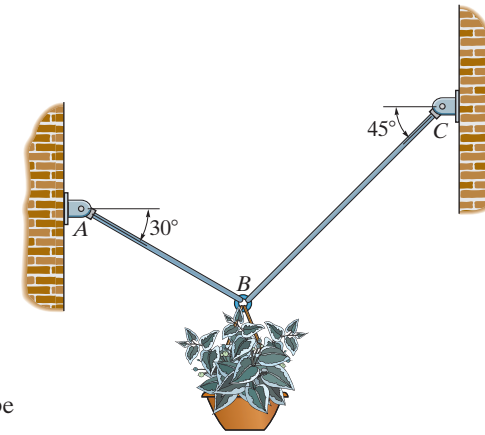

Internal Loading: The normal force developed in cables AB and BC can be determined by considering the equilibrium of joint B, Fig. *a*.

$$\overset{+}{\rightarrow} \Sigma F_x = 0; \qquad F_{BC} \cos 45° - F_{AB} \cos 30° = 0 \qquad (1)$$

$$+\uparrow \Sigma F_y = 0; \qquad F_{AB} \sin 30° + F_{BC} \sin 45° - 50(9.81) = 0 \qquad (2)$$

Solving Eqs. (1) and (2),

$$F_{AB} = 359.07 \text{ N} \qquad F_{BC} = 439.77 \text{ N}$$

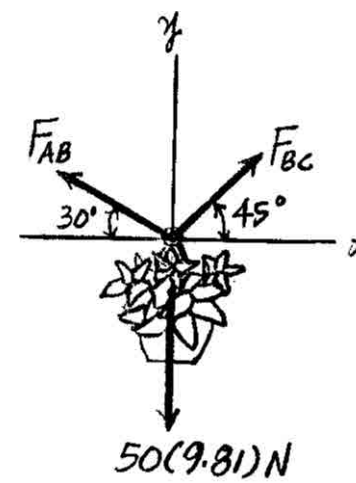

(a)

Allowable Normal Stress:

$$\sigma_{\text{allow}} = \frac{\sigma_{\text{fail}}}{\text{F.S.}} = \frac{350}{2.5} = 140 \text{ MPa}$$

Using this result,

$$\sigma_{\text{allow}} = \frac{F_{AB}}{A_{AB}}; \qquad 140(10^6) = \frac{359.07}{\frac{\pi}{4} d_{AB}^2}$$

$$d_{AB} = 0.001807 \text{ m} = 1.81 \text{ mm} \qquad \textbf{Ans.}$$

$$\sigma_{\text{allow}} = \frac{F_{BC}}{A_{BC}}; \qquad 140(10^6) = \frac{439.77}{\frac{\pi}{4} d_{BC}^2}$$

$$d_{BC} = 0.00200 \text{ m} = 2.00 \text{ mm} \qquad \textbf{Ans.}$$

Ans:
$d_{AB} = 1.81$ mm, $d_{BC} = 2.00$ mm

1–79. The 50-kg flowerpot is suspended from wires AB and BC which have diameters of 1.5 mm and 2 mm, respectively. If the wires have a normal failure stress of $\sigma_{\text{fail}} = 350$ MPa, determine the factor of safety of each wire.

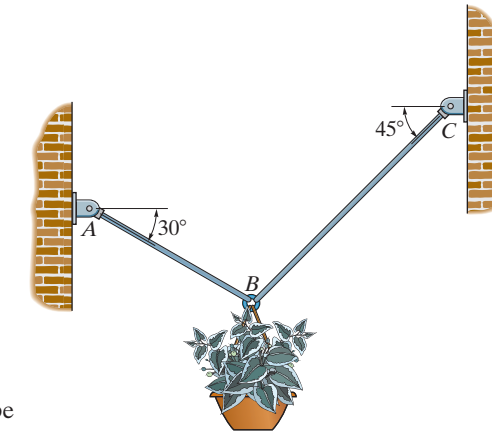

Internal Loading: The normal force developed in cables AB and BC can be determined by considering the equilibrium of joint B, Fig. *a*.

$$\overset{+}{\rightarrow} \Sigma F_x = 0; \qquad F_{BC} \cos 45° - F_{AB} \cos 30° = 0 \qquad (1)$$

$$+\uparrow \Sigma F_y = 0; \qquad F_{AB} \sin 30° + F_{BC} \sin 45° - 50(9.81) = 0 \qquad (2)$$

Solving Eqs. (1) and (2),

$$F_{AB} = 359.07 \text{ N} \qquad F_{BC} = 439.77 \text{ N}$$

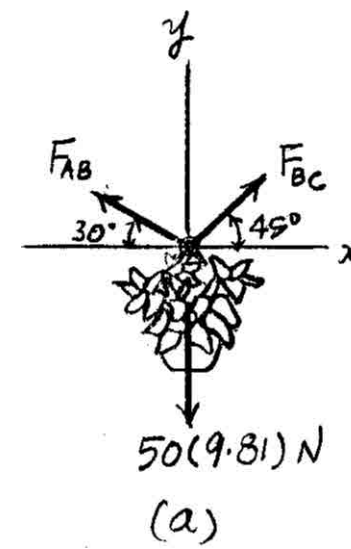

Average Normal Stress: The cross-sectional area of wires AB and BC are $A_{AB} = \frac{\pi}{4}(0.0015)^2 = 1.767(10^{-6})\text{ m}^2$ and $A_{BC} = \frac{\pi}{4}(0.002^2) = 3.142(10^{-6})\text{ m}^2$.

$$(\sigma_{\text{avg}})_{AB} = \frac{F_{AB}}{A_{AB}} = \frac{359.07}{1.767(10^{-6})} = 203.19 \text{ MPa}$$

$$(\sigma_{\text{avg}})_{BC} = \frac{F_{BC}}{A_{BC}} = \frac{439.77}{3.142(10^{-6})} = 139.98 \text{ MPa}$$

We obtain,

$$(\text{F.S.})_{AB} = \frac{\sigma_{\text{fail}}}{(\sigma_{\text{avg}})_{AB}} = \frac{350}{203.19} = 1.72 \qquad \textbf{Ans.}$$

$$(\text{F.S.})_{BC} = \frac{\sigma_{\text{fail}}}{(\sigma_{\text{avg}})_{BC}} = \frac{350}{139.98} = 2.50 \qquad \textbf{Ans.}$$

Ans:
$(\text{F.S.})_{AB} = 1.72$, $(\text{F.S.})_{BC} = 2.50$

***1–80.** The thrust bearing consists of a circular collar A fixed to the shaft B. Determine the maximum axial force P that can be applied to the shaft so that it does not cause the shear stress along a cylindrical surface a or b to exceed an allowable shear stress of $\tau_{allow} = 170$ MPa.

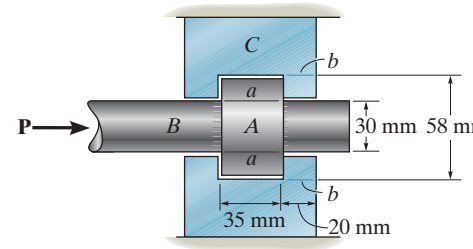

Assume failure along a:

$$\tau_{allow} = 170(10^6) = \frac{P}{\pi(0.03)(0.035)}$$

$$P = 561 \text{ kN (controls)}$$ **Ans.**

Assume failure along b:

$$\tau_{allow} = 170(10^6) = \frac{P}{\pi(0.058)(0.02)}$$

$$P = 620 \text{ kN}$$

1–81. The steel pipe is supported on the circular base plate and concrete pedestal. If the normal failure stress for the steel is $(\sigma_{fail})_{st} = 350$ MPa, determine the minimum thickness t of the pipe if it supports the force of 500 kN. Use a factor of safety against failure of 1.5. Also, find the minimum radius r of the base plate so that the minimum factor of safety against failure of the concrete due to bearing is 2.5. The failure bearing stress for concrete is $(\sigma_{fail})_{con} = 25$ MPa.

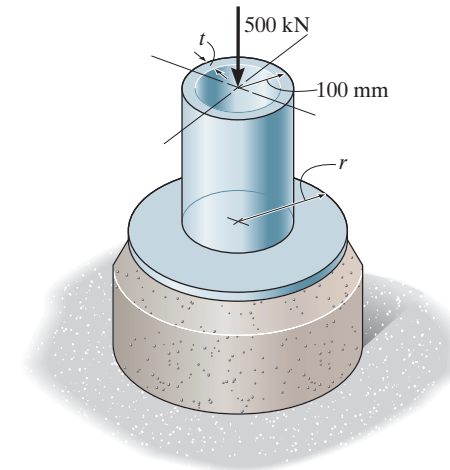

Allowable Stress:

$$(\sigma_{allow})_{st} = \frac{(\sigma_{fail})_{st}}{\text{F.S.}} = \frac{350}{1.5} = 233.33 \text{ MPa}$$

$$(\sigma_{allow})_{con} = \frac{(\sigma_{fail})_{con}}{\text{F.S.}} = \frac{25}{2.5} = 10 \text{ MPa}$$

The cross-sectional area of the steel pipe and the heaving area of the concrete pedestal are $A_{st} = \pi(0.1^2 - r_i^2)$ and $(A_{con})_b = \pi r^2$. Using these results,

$$(\sigma_{allow})_{st} = \frac{P}{A_{st}}; \qquad 233.33(10^6) = \frac{500(10^3)}{\pi(0.1^2 - r_i^2)}$$

$$r_i = 0.09653 \text{ m} = 96.53 \text{ mm}$$

Thus, the minimum required thickness of the steel pipe is

$$t = r_O - r_i = 100 - 96.53 = 3.47 \text{ mm}$$ **Ans.**

The minimum required radius of the bearing area of the concrete pedestal is

$$(\sigma_{allow})_{con} = \frac{P}{(A_{con})_b}; \qquad 10(10^6) = \frac{500(10^3)}{\pi r^2}$$

$$r = 0.1262 \text{ m} = 126 \text{ mm}$$ **Ans.**

Ans:
$t = 3.47$ mm, $r = 126$ mm

1–82. The steel pipe is supported on the circular base plate and concrete pedestal. If the thickness of the pipe is $t = 5$ mm and the base plate has a radius of 150 mm, determine the factors of safety against failure of the steel and concrete. The applied force is 500 kN, and the normal failure stresses for steel and concrete are $(\sigma_{fail})_{st} = 350$ MPa and $(\sigma_{fail})_{con} = 25$ MPa, respectively.

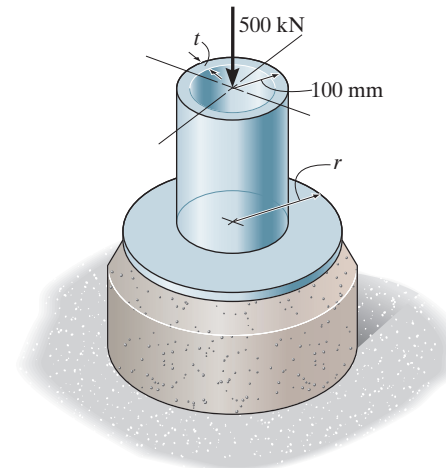

Average Normal and Bearing Stress: The cross-sectional area of the steel pipe and the bearing area of the concrete pedestal are $A_{st} = \pi(0.1^2 - 0.095^2) = 0.975(10^{-3})\pi \text{ m}^2$ and $(A_{con})_b = \pi(0.15^2) = 0.0225\pi \text{ m}^2$. We have

$$(\sigma_{avg})_{st} = \frac{P}{A_{st}} = \frac{500(10^3)}{0.975(10^{-3})\pi} = 163.24 \text{ MPa}$$

$$(\sigma_{avg})_{con} = \frac{P}{(A_{con})_b} = \frac{500(10^3)}{0.0225\pi} = 7.074 \text{ MPa}$$

Thus, the factor of safety against failure of the steel pipe and concrete pedestal are

$$(\text{F.S.})_{st} = \frac{(\sigma_{fail})_{st}}{(\sigma_{avg})_{st}} = \frac{350}{163.24} = 2.14 \qquad \textbf{Ans.}$$

$$(\text{F.S.})_{con} = \frac{(\sigma_{fail})_{con}}{(\sigma_{avg})_{con}} = \frac{25}{7.074} = 3.53 \qquad \textbf{Ans.}$$

Ans:
$(\text{F.S.})_{st} = 2.14$, $(\text{F.S.})_{con} = 3.53$

1–83. The 60 mm × 60 mm oak post is supported on the pine block. If the allowable bearing stresses for these materials are $\sigma_{oak} = 43$ MPa and $\sigma_{pine} = 25$ MPa, determine the greatest load P that can be supported. If a rigid bearing plate is used between these materials, determine its required area so that the maximum load P can be supported. What is this load?

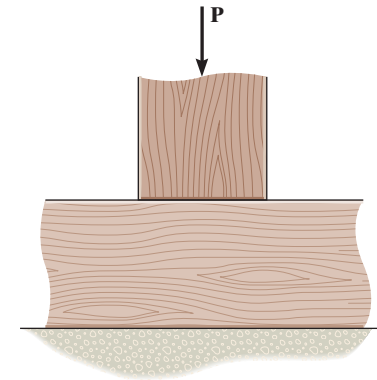

For failure of pine block:

$$\sigma = \frac{P}{A}; \qquad 25(10^6) = \frac{P}{(0.06)(0.06)}$$

$$P = 90 \text{ kN}$$ **Ans.**

For failure of oak post:

$$\sigma = \frac{P}{A}; \qquad 43(10^6) = \frac{P}{(0.06)(0.06)}$$

$$P = 154.8 \text{ kN}$$

Area of plate based on strength of pine block:

$$\sigma = \frac{P}{A}; \qquad 25(10^6) = \frac{154.8(10)^3}{A}$$

$$A = 6.19(10^{-3}) \text{ m}^2$$ **Ans.**

$$P_{max} = 155 \text{ kN}$$ **Ans.**

Ans:
$P = 90$ kN, $A = 6.19(10^{-3})$ m^2, $P_{max} = 155$ kN

***1–84.** The frame is subjected to the load of 4 kN which acts on member ABD at D. Determine the required diameter of the pins at D and C if the allowable shear stress for the material is $\tau_{\text{allow}} = 40$ MPa. Pin C is subjected to double shear, whereas pin D is subjected to single shear.

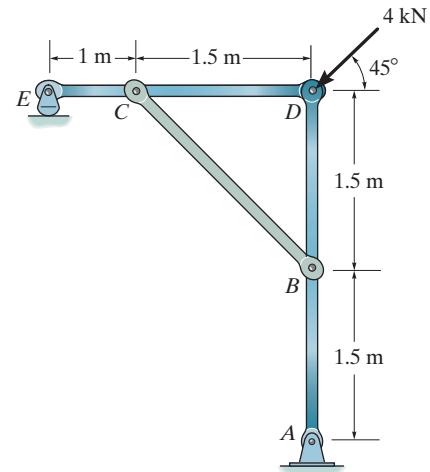

Referring to the FBD of member DCE, Fig. a,

$$\circlearrowleft + \Sigma M_E = 0; \qquad D_y(2.5) - F_{BC}\sin 45°\,(1) = 0 \qquad (1)$$

$$\xrightarrow{+} \Sigma F_x = 0 \qquad F_{BC}\cos 45° - D_x = 0 \qquad (2)$$

Referring to the FBD of member ABD, Fig. b,

$$\circlearrowleft + \Sigma M_A = 0; \qquad 4\cos 45°\,(3) + F_{BC}\sin 45°\,(1.5) - D_x\,(3) = 0 \qquad (3)$$

Solving Eqs (2) and (3),

$F_{BC} = 8.00$ kN $\qquad D_x = 5.657$ kN

Substitute the result of F_{BC} into (1)

$D_y = 2.263$ kN

Thus, the force acting on pin D is

$$F_D = \sqrt{D_x^{\,2} + D_y^{\,2}} = \sqrt{5.657^2 + 2.263^2} = 6.093 \text{ kN}$$

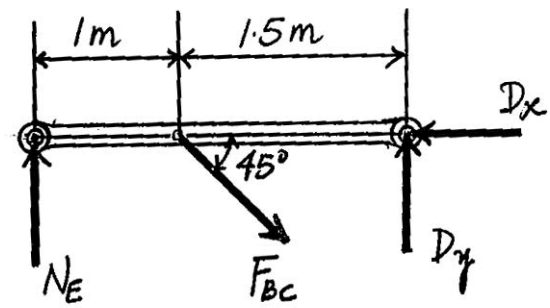

(a)

Pin C is subjected to double shear white pin D is subjected to single shear. Referring to the FBDs of pins C, and D in Fig c and d, respectively,

$$V_C = \frac{F_{BC}}{2} = \frac{8.00}{2} = 4.00 \text{ kN} \qquad V_D = F_D = 6.093 \text{ kN}$$

For pin C,

$$\tau_{\text{allow}} = \frac{V_C}{A_C}; \qquad 40(10^6) = \frac{4.00(10^3)}{\frac{\pi}{4}\,d_C^{\,2}}$$

$d_C = 0.01128$ m $= 11.3$ mm **Ans.**

For pin D,

$$\tau_{\text{allow}} = \frac{V_D}{A_D}; \qquad 40(10^6) = \frac{6.093(10^3)}{\frac{\pi}{4}\,d_D^{\,2}}$$

$d_D = 0.01393$ m $= 13.9$ mm **Ans.**

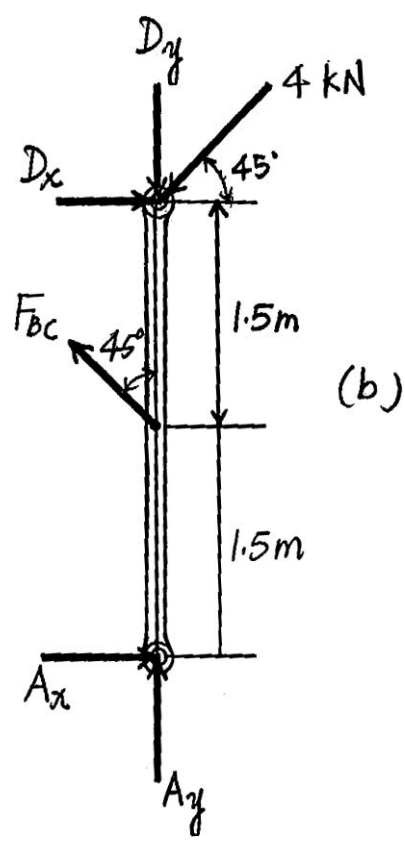

(b)

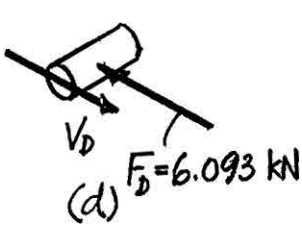

(d)

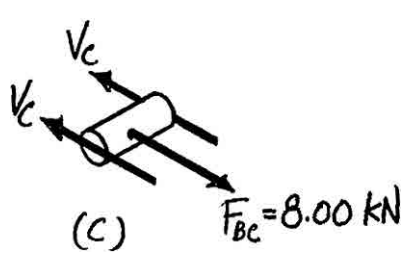

(c)

1–85. The beam is made from southern pine and is supported by base plates resting on brick work. If the allowable bearing stresses for the materials are $(\sigma_{\text{pine}})_{\text{allow}} = 2.81$ ksi and $(\sigma_{\text{brick}})_{\text{allow}} = 6.70$ ksi, determine the required length of the base plates at A and B to the nearest $\frac{1}{4}$ inch in order to support the load shown. The plates are 3 in. wide.

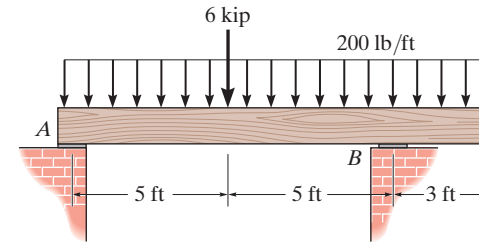

The design must be based on strength of the pine.

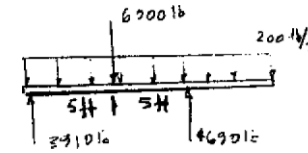

At A:

$$\sigma = \frac{P}{A}; \qquad 2810 = \frac{3910}{l_A(3)}$$

$$\text{Use } l_A = \frac{1}{2} \text{ in.} \qquad l_A = 0.464 \text{ in.}$$ **Ans.**

At B:

$$\sigma = \frac{P}{A}; \qquad 2810 = \frac{4690}{l(3)}$$

$$\text{Use } l_B = \frac{3}{4} \text{ in.} \qquad l_B = 0.556 \text{ in.}$$ **Ans.**

Ans:

Use $l_A = \frac{1}{2}$ in., $l_B = \frac{3}{4}$ in.

1–86. The two aluminum rods support the vertical force of $P = 20$ kN. Determine their required diameters if the allowable tensile stress for the aluminum is $\sigma_{\text{allow}} = 150$ MPa.

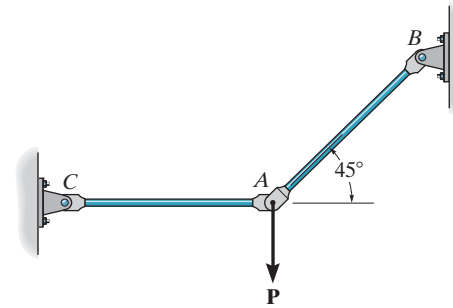

$+\uparrow \Sigma F_y = 0;$ $\quad F_{AB} \sin 45° - 20 = 0;$ $\quad F_{AB} = 28.284$ kN

$\overset{+}{\rightarrow} \Sigma F_x = 0;$ $\quad 28.284 \cos 45° - F_{AC} = 0;$ $\quad F_{AC} = 20.0$ kN

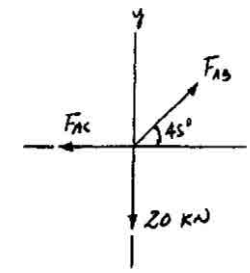

For rod AB:

$$\sigma_{\text{allow}} = \frac{F_{AB}}{A_{AB}}; \qquad 150(10^6) = \frac{28.284(10^3)}{\frac{\pi}{4} d_{AB}^2}$$

$d_{AB} = 0.0155$ m $= 15.5$ mm **Ans.**

For rod AC:

$$\sigma_{\text{allow}} = \frac{F_{AC}}{A_{AC}}; \qquad 150(10^6) = \frac{20.0(10^3)}{\frac{\pi}{4} d_{AC}^2}$$

$d_{AC} = 0.0130$ m $= 13.0$ mm **Ans.**

Ans:
$d_{AB} = 15.5$ mm, $d_{AC} = 13.0$ mm

1–87. The two aluminum rods AB and AC have diameters of 10 mm and 8 mm, respectively. Determine the largest vertical force **P** that can be supported. The allowable tensile stress for the aluminum is $\sigma_{\text{allow}} = 150$ MPa.

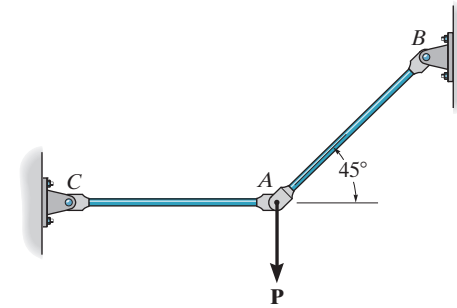

$+\uparrow \Sigma F_y = 0; \qquad F_{AB}\sin 45° - P = 0; \qquad P = F_{AB}\sin 45° \qquad (1)$

$\overset{+}{\rightarrow} \Sigma F_x = 0; \qquad F_{AB}\cos 45° - F_{AC} = 0 \qquad (2)$

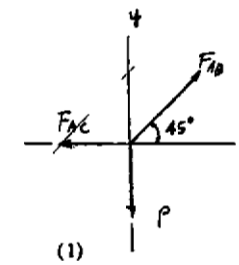

Assume failure of rod AB:

$$\sigma_{\text{allow}} = \frac{F_{AB}}{A_{AB}}; \quad 150(10^6) = \frac{F_{AB}}{\frac{\pi}{4}(0.01)^2}$$

$F_{AB} = 11.78$ kN

From Eq. (1),

$P = 8.33$ kN

Assume failure of rod AC:

$$\sigma_{\text{allow}} = \frac{F_{AC}}{A_{AC}}; \quad 150(10^6) = \frac{F_{AC}}{\frac{\pi}{4}(0.008)^2}$$

$F_{AC} = 7.540$ kN

Solving Eqs. (1) and (2) yields:

$F_{AB} = 10.66$ kN ; $\quad P = 7.54$ kN

Choose the smallest value

$P = 7.54$ kN **Ans.**

Ans:
$P = 7.54$ kN

***1–88.** The compound wooden beam is connected together by a bolt at B. Assuming that the connections at A, B, C, and D exert only vertical forces on the beam, determine the required diameter of the bolt at B and the required outer diameter of its washers if the allowable tensile stress for the bolt is $(\sigma_t)_{\text{allow}} = 150$ MPa and the allowable bearing stress for the wood is $(\sigma_b)_{\text{allow}} = 28$ MPa. Assume that the hole in the washers has the same diameter as the bolt.

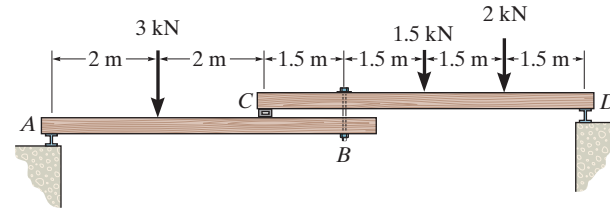

From FBD (a):

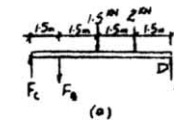

$$\circlearrowleft + \Sigma M_D = 0; \qquad F_B(4.5) + 1.5(3) + 2(1.5) - F_C(6) = 0$$

$$4.5\,F_B - 6\,F_C = -7.5 \qquad \textbf{(1)}$$

From FBD (b):

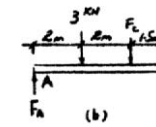

$$\circlearrowleft + \Sigma M_A = 0; \qquad F_B(5.5) - F_C(4) - 3(2) = 0$$

$$5.5\,F_B - 4\,F_C = 6 \qquad \textbf{(2)}$$

Solving Eqs. (1) and (2) yields

$$F_B = 4.40 \text{ kN}; \qquad F_C = 4.55 \text{ kN}$$

For bolt:

$$\sigma_{\text{allow}} = 150(10^6) = \frac{4.40(10^3)}{\frac{\pi}{4}(d_B)^2}$$

$$d_B = 0.00611 \text{ m}$$

$$= 6.11 \text{ mm} \qquad \textbf{Ans.}$$

For washer:

$$\sigma_{\text{allow}} = 28(10^4) = \frac{4.40(10^3)}{\frac{\pi}{4}(d_w^2 - 0.00611^2)}$$

$$d_w = 0.0154 \text{ m} = 15.4 \text{ mm} \qquad \textbf{Ans.}$$

1–89. Determine the required minimum thickness t of member AB and edge distance b of the frame if $P = 9$ kip and the factor of safety against failure is 2. The wood has a normal failure stress of $\sigma_{\text{fail}} = 6$ ksi, and shear failure stress of $\tau_{\text{fail}} = 1.5$ ksi.

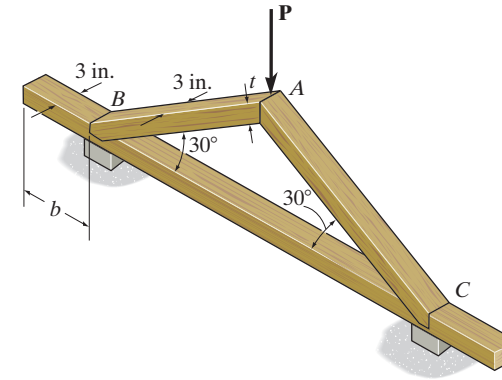

Internal Loadings: The normal force developed in member AB can be determined by considering the equilibrium of joint A. Fig. a.

$\overset{+}{\rightarrow} \Sigma F_x = 0;$ $\quad F_{AB}\cos 30° - F_{AC}\cos 30° = 0 \quad F_{AC} = F_{AB}$

$+\uparrow \Sigma F_y = 0;$ $\quad 2F_{AB}\sin 30° - 9 = 0 \quad F_{AB} = 9$ kip

Subsequently, the horizontal component of the force acting on joint B can be determined by analyzing the equilibrium of member AB, Fig. b.

$\overset{+}{\rightarrow} \Sigma F_x = 0;$ $\quad (F_B)_x - 9\cos 30° = 0 \quad (F_B)_x = 7.794$ kip

Referring to the free-body diagram shown in Fig. c, the shear force developed on the shear plane a–a is

$\overset{+}{\rightarrow} \Sigma F_x = 0;$ $\quad V_{a-a} - 7.794 = 0 \quad V_{a-a} = 7.794$ kip

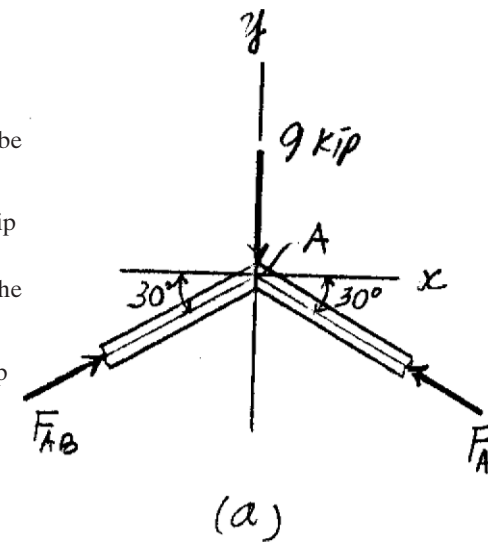

Allowable Normal Stress:

$$\sigma_{\text{allow}} = \frac{\sigma_{\text{fail}}}{\text{F.S.}} = \frac{6}{2} = 3 \text{ ksi}$$

$$\tau_{\text{allow}} = \frac{\tau_{\text{fail}}}{\text{F.S.}} = \frac{1.5}{2} = 0.75 \text{ ksi}$$

Using these results,

$$\sigma_{\text{allow}} = \frac{F_{AB}}{A_{AB}}; \qquad 3(10^3) = \frac{9(10^3)}{3t}$$

$t = 1$ in. **Ans.**

$$\tau_{\text{allow}} = \frac{V_{a-a}}{A_{a-a}}; \qquad 0.75(10^3) = \frac{7.794(10^3)}{3b}$$

$b = 3.46$ in. **Ans.**

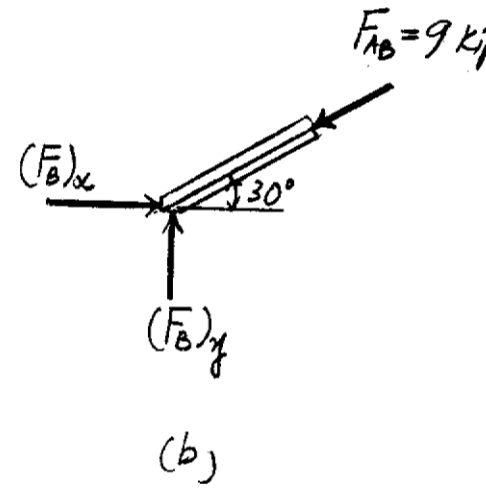

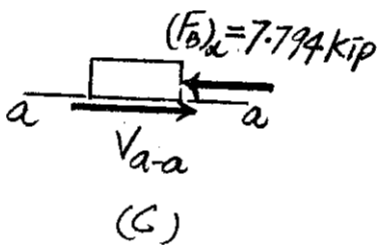

Ans:
$t = 1$ in., $b = 3.46$ in.

1–90. Determine the maximum allowable load **P** that can be safely supported by the frame if $t = 1.25$ in. and $b = 3.5$ in. The wood has a normal failure stress of $\sigma_{\text{fail}} = 6$ ksi, and shear failure stress of $\tau_{\text{fail}} = 1.5$ ksi. Use a factor of safety against failure of 2.

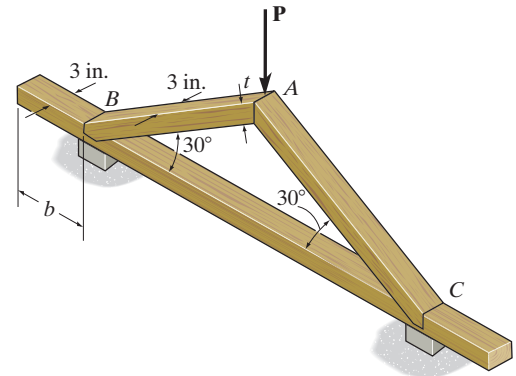

Internal Loadings: The normal force developed in member AB can be determined by considering the equilibrium of joint A. Fig. a.

$\overset{+}{\rightarrow} \Sigma F_x = 0;$ $\quad F_{AB}\cos 30° - F_{AC}\cos 30° = 0 \quad F_{AC} = F_{AB}$

$+\uparrow \Sigma F_y = 0;$ $\quad 2F_{AB}\sin 30° - 9 = 0 \quad F_{AB} = P$

Subsequently, the horizontal component of the force acting on joint B can be determined by analyzing the equilibrium of member AB, Fig. b.

$\overset{+}{\rightarrow} \Sigma F_x = 0;$ $\quad (F_B)_x - P\cos 30° = 0 \quad (F_B)_x = 0.8660P$

Referring to the free-body diagram shown in Fig. c, the shear force developed on the shear plane a–a is

$\overset{+}{\rightarrow} \Sigma F_x = 0;$ $\quad V_{a-a} - 0.8660P = 0 \quad V_{a-a} = 0.8660P$

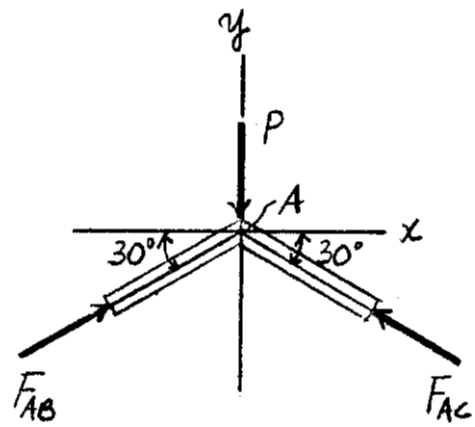

(a)

Allowable Normal and Shear Stress:

$$\sigma_{\text{allow}} = \frac{\sigma_{\text{fail}}}{\text{F.S.}} = \frac{6}{2} = 3 \text{ ksi}$$

$$\tau_{\text{allow}} = \frac{\tau_{\text{fail}}}{\text{F.S.}} = \frac{1.5}{2} = 0.75 \text{ ksi}$$

Using these results,

$$\sigma_{\text{allow}} = \frac{F_{AB}}{A_{AB}}; \qquad 3(10^3) = \frac{P}{3(1.25)}$$

$$P = 11\,250 \text{ lb} = 11.25 \text{ kip}$$

$$\tau_{\text{allow}} = \frac{V_{a-a}}{A_{a-a}}; \qquad 0.75(10^3) = \frac{0.8660P}{3(3.5)}$$

$$P = 9093.27 \text{ lb} = 9.09 \text{ kip (controls)} \qquad \textbf{Ans.}$$

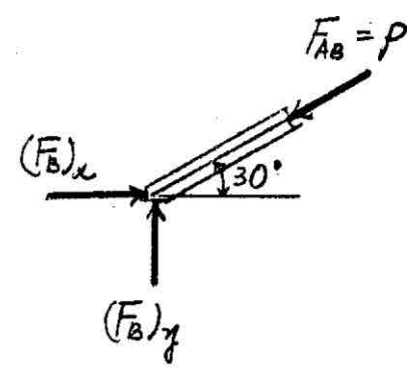

(b)

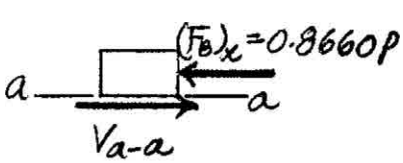

(c)

Ans:
$P = 9.09$ kip

1–91. If the allowable bearing stress for the material under the supports at A and B is $(\sigma_b)_{\text{allow}} = 1.5$ MPa, determine the size of *square* bearing plates A' and B' required to support the load. Dimension the plates to the nearest mm. The reactions at the supports are vertical. Take $P = 100$ kN.

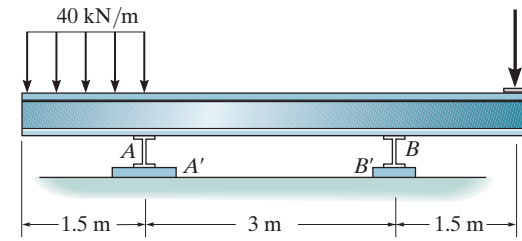

Referring to the FBD of the bean, Fig. *a*

$\circlearrowleft + \Sigma M_A = 0; \qquad N_B(3) + 40(1.5)(0.75) - 100(4.5) = 0 \qquad N_B = 135 \text{ kN}$

$\circlearrowleft + \Sigma M_B = 0; \qquad 40(1.5)(3.75) - 100(1.5) - N_A(3) = 0 \qquad N_A = 25.0 \text{ kN}$

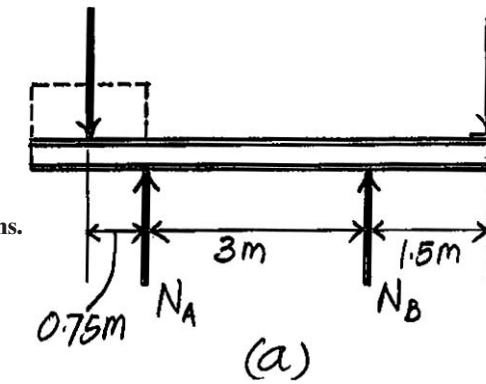

For plate A',

$$(\sigma_b)_{\text{allow}} = \frac{N_A}{A_{A'}}; \qquad 1.5(10^6) = \frac{25.0(10^3)}{a_{A'}^2}$$

$$a_{A'} = 0.1291 \text{ m} = 130 \text{ mm}$$ **Ans.**

For plate B',

$$\sigma_{\text{allow}} = \frac{N_B}{A_{B'}}; \qquad 1.5(10^6) = \frac{135(10^3)}{a_{B'}^2}$$

$$a_{B'} = 0.300 \text{ m} = 300 \text{ mm}$$ **Ans.**

Ans:
$a_{A'} = 130$ mm, $a_{B'} = 300$ mm

***1–92.** If the allowable bearing stress for the material under the supports at A and B is $(\sigma_b)_{\text{allow}} = 1.5$ MPa, determine the maximum load P that can be applied to the beam. The bearing plates A' and B' have square cross sections of 150 mm × 150 mm and 250 mm × 250 mm, respectively.

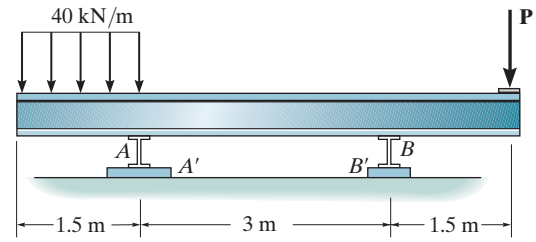

Referring to the FBD of the beam, Fig. *a*,

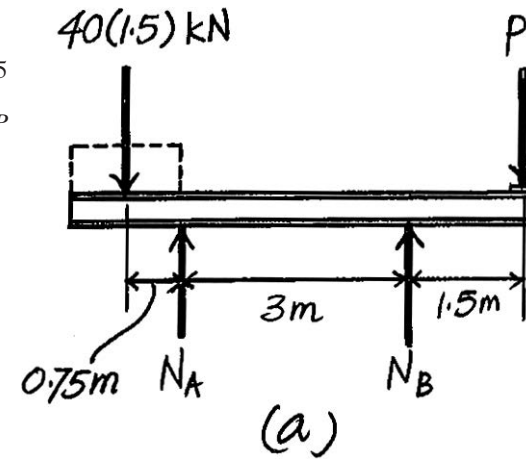

$\circlearrowleft + \Sigma M_A = 0; \qquad N_B(3) + 40(1.5)(0.75) - P(4.5) = 0 \qquad N_B = 1.5P - 15$

$\circlearrowleft + \Sigma M_B = 0; \qquad 40(1.5)(3.75) - P(1.5) - N_A(3) = 0 \qquad N_A = 75 - 0.5P$

For plate A',

$$(\sigma_b)_{\text{allow}} = \frac{N_A}{A_{A'}}; \qquad 1.5(10^6) = \frac{(75 - 0.5P)(10^3)}{0.15(0.15)}$$

$$P = 82.5 \text{ kN}$$

For plate B',

$$(\sigma_b)_{\text{allow}} = \frac{N_B}{A_{B'}}; \qquad 1.5(10^6) = \frac{(1.5P - 15)(10^3)}{0.25(0.25)}$$

$$P = 72.5 \text{ kN} \quad \text{(Controls!)}$$ **Ans.**

1–93. The rods AB and CD are made of steel. Determine their smallest diameter so that they can support the dead loads shown. The beam is assumed to be pin connected at A and C. Use the LRFD method, where the resistance factor for steel in tension is $\phi = 0.9$, and the dead load factor is $\gamma_D = 1.4$. The failure stress is $\sigma_{\text{fail}} = 345$ MPa.

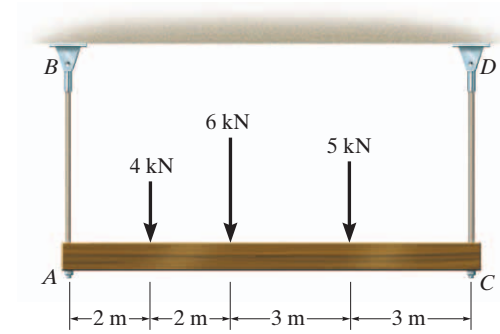

Support Reactions:

$\circlearrowleft + \Sigma M_A = 0; \qquad F_{CD}(10) - 5(7) - 6(4) - 4(2) = 0$

$$F_{CD} = 6.70 \text{ kN}$$

$\circlearrowleft + \Sigma M_C = 0; \qquad 4(8) + 6(6) + 5(3) - F_{AB}(10) = 0$

$$F_{AB} = 8.30 \text{ kN}$$

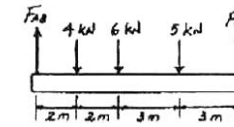

Factored Loads:

$F_{CD} = 1.4(6.70) = 9.38 \text{ kN}$

$F_{AB} = 1.4(8.30) = 11.62 \text{ kN}$

For rod *AB*

$$0.9[345(10^6)]\,\pi\left(\frac{d_{AB}}{2}\right)^2 = 11.62(10^3)$$

$$d_{AB} = 0.00690 \text{ m} = 6.90 \text{ mm}$$ **Ans.**

For rod *CD*

$$0.9[345(10^6)]\,\pi\left(\frac{d_{CD}}{2}\right)^2 = 9.38(10^3)$$

$$d_{CD} = 0.00620 \text{ m} = 6.20 \text{ mm}$$ **Ans.**

Ans:
$d_{AB} = 6.90$ mm, $d_{CD} = 6.20$ mm

1–94. The aluminum bracket A is used to support the centrally applied load of 8 kip. If it has a constant thickness of 0.5 in., determine the smallest height h in order to prevent a shear failure. The failure shear stress is $\tau_{\text{fail}} = 23$ ksi. Use a factor of safety for shear of F.S. = 2.5.

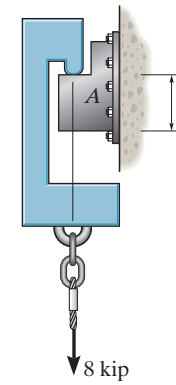

Equation of Equilibrium:

$+\uparrow \Sigma F_y = 0; \qquad V - 8 = 0 \qquad V = 8.00 \text{ kip}$

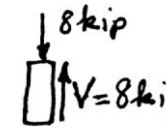

Allowable Shear Stress: Design of the support size

$$\tau_{\text{allow}} = \frac{\tau_{\text{fail}}}{\text{F.S}} = \frac{V}{A}; \qquad \frac{23(10^3)}{2.5} = \frac{8.00(10^3)}{h(0.5)}$$

$$h = 1.74 \text{ in.} \qquad \textbf{Ans.}$$

Ans:
$h = 1.74$ in.

1–95. The pin support A and roller support B of the bridge truss are supported on concrete abutments. If the bearing failure stress of the concrete is $(\sigma_{\text{fail}})_b = 4$ ksi, determine the required minimum dimension of the square bearing plates at C and D to the nearest $\frac{1}{16}$ in. Apply a factor of safety of 2 against failure.

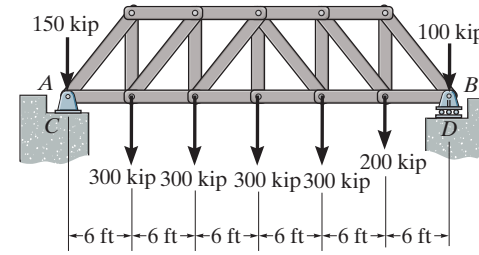

Internal Loadings: The forces acting on the bearing plates C and D can be determined by considering the equilibrium of the free-body diagram of the truss shown in Fig. a,

$$\circlearrowleft + \Sigma M_A = 0; \quad B_y(36) - 100(36) - 200(30) - 300(24) - 300(18) - 300(12) - 300(6) = 0$$

$$B_y = 766.67 \text{ kip}$$

$$\circlearrowleft + \Sigma M_B = 0; \quad 150(36) + 300(30) + 300(24) + 300(18) + 300(12) + 200(6) - A_y(36) = 0$$

$$A_y = 883.33 \text{ kip}$$

Thus, the axial forces acting on C and D are

$$F_C = A_y = 883.33 \text{ kip} \qquad F_D = B_y = 766.67 \text{ kip}$$

Allowable Bearing Stress:

$$(\sigma_{\text{allow}})_b = \frac{(\sigma_{\text{fail}})_b}{\text{F.S.}} = \frac{4}{2} = 2 \text{ ksi}$$

Using this result,

$$(\sigma_{\text{allow}})_b = \frac{F_D}{A_D}; \qquad 2(10^3) = \frac{766.67(10^3)}{a_D^2}$$

$$a_D = 19.58 \text{ in.} = 19\frac{5}{8} \text{ in.} \qquad \textbf{Ans.}$$

$$(\sigma_{\text{allow}})_b = \frac{F_C}{A_C}; \qquad 2(10^3) = \frac{883.33(10^3)}{a_C^2}$$

$$a_C = 21.02 \text{ in.} = 21\frac{1}{16} \text{ in.} \qquad \textbf{Ans.}$$

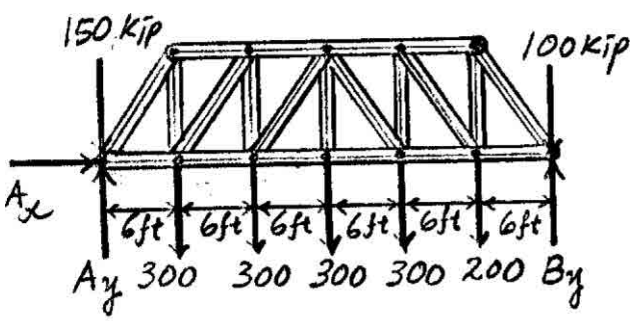

(a)

Ans:
Use $a_D = 19\frac{5}{8}$ in., $a_C = 21\frac{1}{16}$ in.

***1–96.** The pin support A and roller support B of the bridge truss are supported on the concrete abutments. If the square bearing plates at C and D are 21 in. × 21 in., and the bearing failure stress for concrete is $(\sigma_{\text{fail}})_b = 4$ ksi, determine the factor of safety against bearing failure for the concrete under each plate.

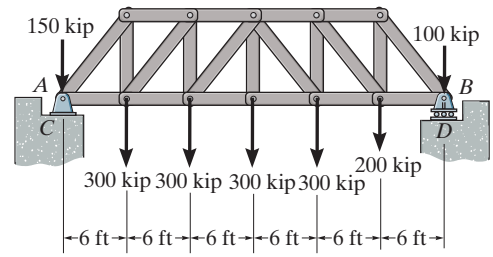

Internal Loadings: The forces acting on the bearing plates C and D can be determined by considering the equilibrium of the free-body diagram of the truss shown in Fig. a,

$$\circlearrowleft + \Sigma M_A = 0;\ B_y(36) - 100(36) - 200(30) - 300(24) - 300(18) - 300(12) - 300(6) = 0$$

$$B_y = 766.67 \text{ kips}$$

$$\circlearrowleft + \Sigma M_B = 0;\ 150(36) + 300(30) + 300(24) + 300(18) + 300(12) + 200(6) - A_y(36) = 0$$

$$A_y = 883.33 \text{ kips}$$

Thus, the axial forces acting on C and D are

$$F_C = A_y = 883.33 \text{ kips} \qquad F_D = B_y = 766.67 \text{ kips}$$

Allowable Bearing Stress: The bearing area on the concrete abutment is $A_b = 21(21) = 441 \text{ in}^2$. We obtain

$$(\sigma_b)_C = \frac{F_C}{A_b} = \frac{883.33}{441} = 2.003 \text{ ksi}$$

$$(\sigma_b)_D = \frac{F_D}{A_b} = \frac{766.67}{441} = 1.738 \text{ ksi}$$

Using these results,

$$(\text{F.S.})_C = \frac{(\sigma_{\text{fail}})_b}{(\sigma_b)_C} = \frac{4}{2.003} = 2.00 \qquad \textbf{Ans.}$$

$$(\text{F.S.})_C = \frac{(\sigma_{\text{fail}})_b}{(\sigma_b)_C} = \frac{4}{1.738} = 2.30 \qquad \textbf{Ans.}$$

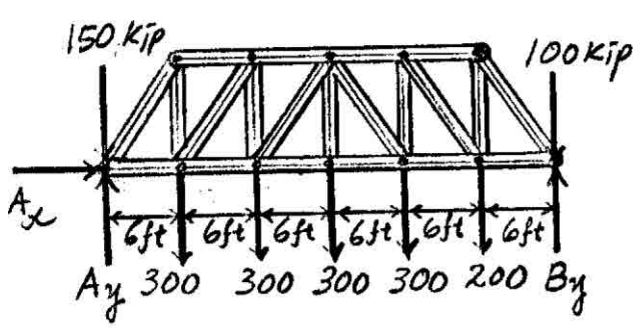

(a)

1–97. The beam AB is pin supported at A and supported by a cable BC. A *separate* cable CG is used to hold up the frame. If AB weighs 120 lb/ft and the column FC has a weight of 180 lb/ft, determine the resultant internal loadings acting on cross sections located at points D and E. Neglect the thickness of both the beam and column in the calculation.

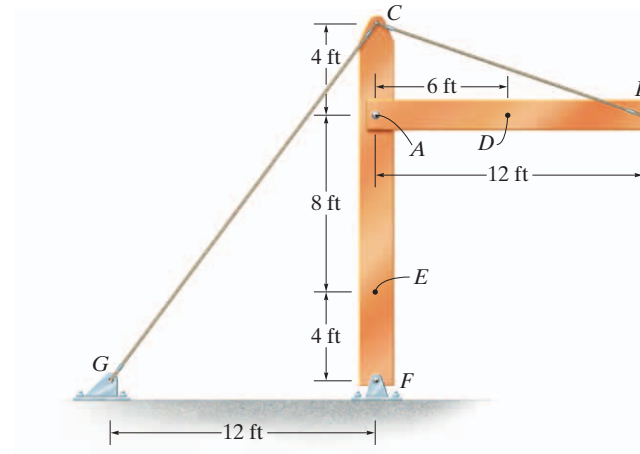

Segment AD:

$\xrightarrow{+} \Sigma F_x = 0;\quad N_D + 2.16 = 0;\quad N_D = -2.16 \text{ kip}$ **Ans.**

$+\downarrow \Sigma F_y = 0;\quad V_D + 0.72 - 0.72 = 0;\quad V_D = 0$ **Ans.**

$\circlearrowleft + \Sigma M_D = 0;\quad M_D - 0.72(3) = 0;\quad M_D = 2.16 \text{ kip}\cdot\text{ft}$ **Ans.**

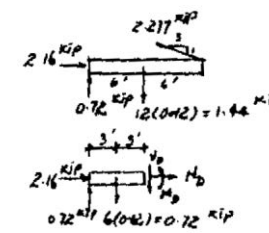

Segment FE:

$\xleftarrow{+} \Sigma F_x = 0;\quad V_E - 0.54 = 0;\quad V_E = 0.540 \text{ kip}$ **Ans.**

$+\downarrow \Sigma F_y = 0;\quad N_E + 0.72 - 5.04 = 0;\quad N_E = 4.32 \text{ kip}$ **Ans.**

$\circlearrowleft + \Sigma M_E = 0;\quad -M_E + 0.54(4) = 0;\quad M_E = 2.16 \text{ kip}\cdot\text{ft}$ **Ans.**

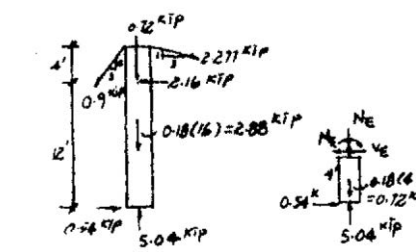

Ans:
$N_D = -2.16$ kip, $V_D = 0$, $M_D = 2.16$ kip · ft,
$V_E = 0.540$ kip, $N_E = 4.32$ kip, $M_E = 2.16$ kip · ft

1–98. The long bolt passes through the 30-mm-thick plate. If the force in the bolt shank is 8 kN, determine the average normal stress in the shank, the average shear stress along the cylindrical area of the plate defined by the section lines *a–a*, and the average shear stress in the bolt head along the cylindrical area defined by the section lines *b–b*.

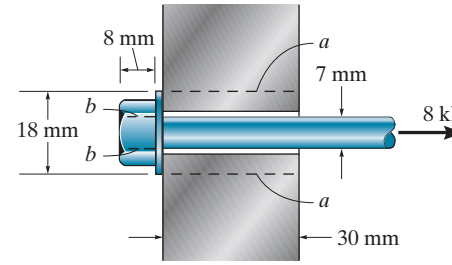

$$\sigma_s = \frac{P}{A} = \frac{8\,(10^3)}{\frac{\pi}{4}\,(0.007)^2} = 208 \text{ MPa}$$ **Ans.**

$$(\tau_{\text{avg}})_a = \frac{V}{A} = \frac{8\,(10^3)}{\pi\,(0.018)(0.030)} = 4.72 \text{ MPa}$$ **Ans.**

$$(\tau_{\text{avg}})_b = \frac{V}{A} = \frac{8\,(10^3)}{\pi\,(0.007)(0.008)} = 45.5 \text{ MPa}$$ **Ans.**

Ans:
$\sigma_s = 208$ MPa, $(\tau_{\text{avg}})_a = 4.72$ MPa, $(\tau_{\text{avg}})_b = 45.5$ MPa

1–99. To the nearest $\frac{1}{16}$ in., determine the required thickness of member BC and the diameter of the pins at A and B if the allowable normal stress for member BC is $\sigma_{\text{allow}} = 29$ ksi and the allowable shear stress for the pins is $\sigma_{\text{allow}} = 10$ ksi.

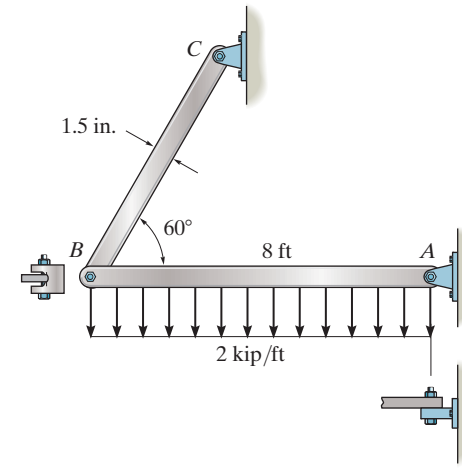

Referring to the FBD of member AB, Fig. a,

$\circlearrowleft + \Sigma M_A = 0; \qquad 2(8)(4) - F_{BC} \sin 60° (8) = 0 \qquad F_{BC} = 9.238 \text{ kip}$

$\overset{+}{\rightarrow} \Sigma F_x = 0; \qquad 9.238 \cos 60° - A_x = 0 \qquad A_x = 4.619 \text{ kip}$

$+\uparrow \Sigma F_y = 0; \qquad 9.238 \sin 60° - 2(8) + A_y = 0 \qquad A_y = 8.00 \text{ kip}$

Thus, the force acting on pin A is

$$F_A = \sqrt{A_x^2 + A_y^2} = \sqrt{4.619^2 + 8.00^2} = 9.238 \text{ kip}$$

Pin A is subjected to single shear, Fig. c, while pin B is subjected to double shear, Fig. b.

$$V_A = F_A = 9.238 \text{ kip} \qquad V_B = \frac{F_{BC}}{2} = \frac{9.238}{2} = 4.619 \text{ kip}$$

For member BC

$$\sigma_{\text{allow}} = \frac{F_{BC}}{A_{BC}}; \qquad 29 = \frac{9.238}{1.5(t)} \qquad t = 0.2124 \text{ in.}$$

$$\text{Use } t = \frac{1}{4} \text{ in.} \qquad \textbf{Ans.}$$

For pin A,

$$\tau_{\text{allow}} = \frac{V_A}{A_A}; \qquad 10 = \frac{9.238}{\frac{\pi}{4} d_A^2} \qquad d_A = 1.085 \text{ in.}$$

$$\text{Use } d_A = 1\frac{1}{8} \text{ in.} \qquad \textbf{Ans.}$$

For pin B,

$$\tau_{\text{allow}} = \frac{V_B}{A_B}; \qquad 10 = \frac{4.619}{\frac{\pi}{4} d_B^2} \qquad d_B = 0.7669 \text{ in.}$$

$$\text{Use } d_B = \frac{13}{16} \text{ in.} \qquad \textbf{Ans.}$$

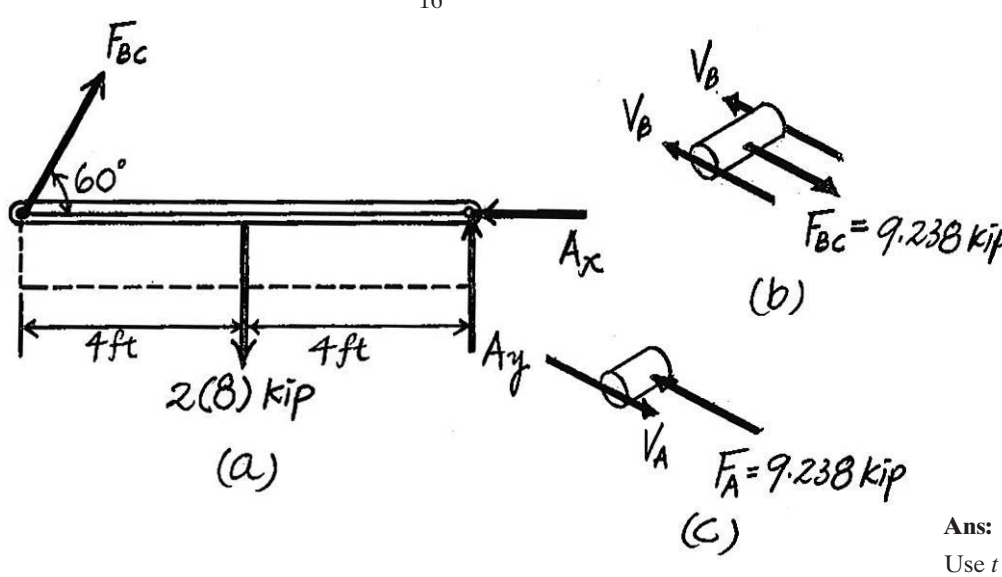

Ans:
Use $t = \frac{1}{4}$ in., $d_A = 1\frac{1}{8}$ in., $d_B = \frac{13}{16}$ in.

***1–100.** The circular punch B exerts a force of 2 kN on the lop of the plate A. Determine the average shear stress in the plate due to this loading.

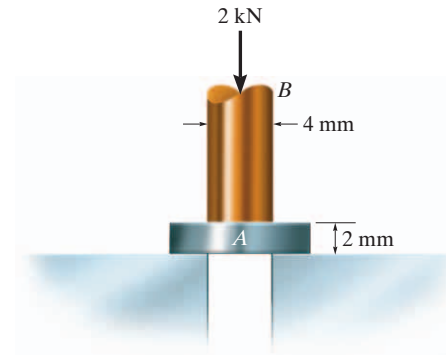

Average Shear Stress: The shear area $A = \pi(0.004)(0.002) = 8.00(10^{-6})\pi \text{ m}^2$

$$\tau_{avg} = \frac{V}{A} = \frac{2(10^3)}{8.00(10^{-6})\pi} = 79.6 \text{ MPa}$$ **Ans.**

1–101. Determine the average punching shear stress the circular shaft creates in the metal plate through section AC and BD. Also, what is the bearing stress developed on the surface of the plate under the shaft?

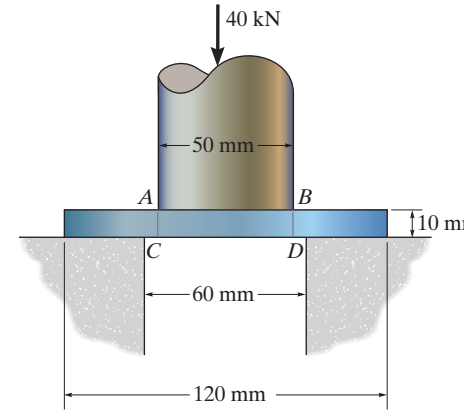

Average Shear and Bearing Stress: The area of the shear plane and the bearing area on the punch are $A_V = \pi(0.05)(0.01) = 0.5(10^{-3})\pi \text{ m}^2$ and $A_b = \frac{\pi}{4}\left(0.12^2 - 0.06^2\right) = 2.7(10^{-3})\pi \text{ m}^2$. We obtain

$$\tau_{avg} = \frac{P}{A_V} = \frac{40(10^3)}{0.5(10^{-3})\pi} = 25.5 \text{ MPa} \qquad \textbf{Ans.}$$

$$\sigma_b = \frac{P}{A_b} = \frac{40(10^3)}{2.7(10^{-3})\pi} = 4.72 \text{ MPa} \qquad \textbf{Ans.}$$

Ans:
$\tau_{avg} = 25.5$ MPa, $\sigma_b = 4.72$ MPa

1–102. The bearing pad consists of a 150 mm by 150 mm block of aluminum that supports a compressive load of 6 kN. Determine the average normal and shear stress acting on the plane through section *a–a*. Show the results on a differential volume element located on the plane.

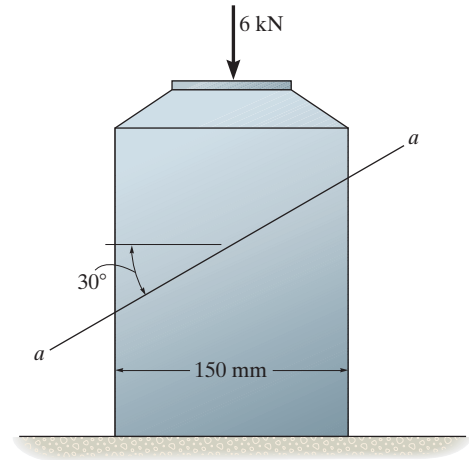

Equation of Equilibrium:

$+\nearrow \Sigma F_x = 0; \qquad V_{a-a} - 6\cos 60° = 0 \qquad V_{a-a} = 3.00 \text{ kN}$

$\nwarrow + \Sigma F_y = 0; \qquad N_{a-a} - 6\sin 60° = 0 \qquad N_{a-a} = 5.196 \text{ kN}$

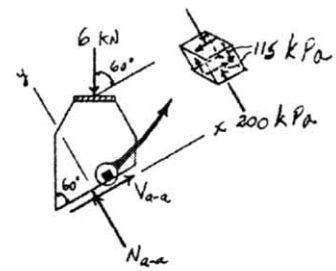

Average Normal Stress And Shear Stress: The cross sectional Area at section *a–a* is

$$A = \left(\frac{0.15}{\sin 60°}\right)(0.15) = 0.02598 \text{ m}^2.$$

$$\sigma_{a-a} = \frac{N_{a-a}}{A} = \frac{5.196(10^3)}{0.02598} = 200 \text{ kPa} \qquad \textbf{Ans.}$$

$$\tau_{a-a} = \frac{V_{a-a}}{A} = \frac{3.00(10^3)}{0.02598} = 115 \text{ kPa} \qquad \textbf{Ans.}$$

Ans:
$\sigma_{a-a} = 200$ kPa, $\tau_{a-a} = 115$ kPa

1–103. The yoke-and-rod connection is subjected to a tensile force of 5 kN. Determine the average normal stress in each rod and the average shear stress in the pin A between the members.

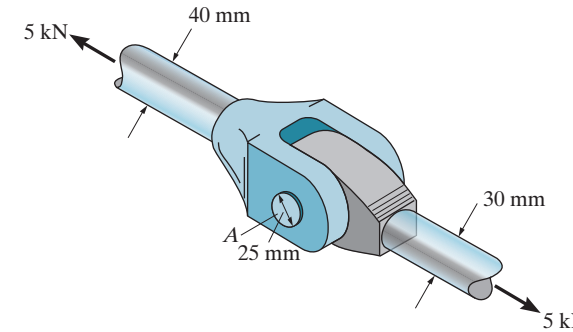

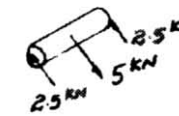

For the 40 – mm – dia rod:

$$\sigma_{40} = \frac{P}{A} = \frac{5\,(10^3)}{\frac{\pi}{4}\,(0.04)^2} = 3.98 \text{ MPa}$$ **Ans.**

For the 30 – mm – dia rod:

$$\sigma_{30} = \frac{V}{A} = \frac{5\,(10^3)}{\frac{\pi}{4}\,(0.03)^2} = 7.07 \text{ MPa}$$ **Ans.**

Average shear stress for pin A:

$$\tau_{avg} = \frac{P}{A} = \frac{2.5\,(10^3)}{\frac{\pi}{4}\,(0.025)^2} = 5.09 \text{ MPa}$$ **Ans.**

Ans:
$\sigma_{40} = 3.98$ MPa, $\sigma_{30} = 7.07$ MPa
$\tau_{avg} = 5.09$ MPa

***1–104.** The cable has a specific weight γ (weight/volume) and cross-sectional area A. If the sag s is small, so that its length is approximately L and its weight can be distributed uniformly along the horizontal axis, determine the average normal stress in the cable at its lowest point C.

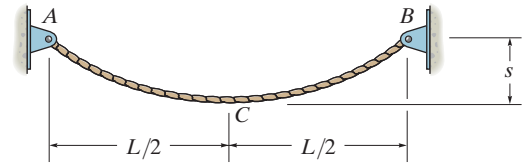

Equation of Equilibrium:

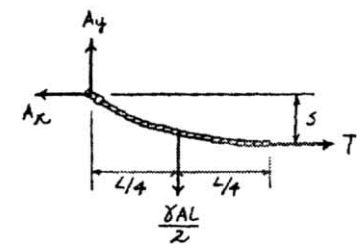

$$\circlearrowleft + \Sigma M_A = 0; \qquad Ts - \frac{\gamma AL}{2}\left(\frac{L}{4}\right) = 0$$

$$T = \frac{\gamma AL^2}{8\,s}$$

Average Normal Stress:

$$\sigma = \frac{T}{A} = \frac{\frac{\gamma AL^2}{8\,s}}{A} = \frac{\gamma L^2}{8\,s} \qquad \textbf{Ans.}$$

2–1. An air-filled rubber ball has a diameter of 6 in. If the air pressure within it is increased until the ball's diameter becomes 7 in., determine the average normal strain in the rubber.

$d_0 = 6$ in.

$d = 7$ in.

$$\epsilon = \frac{\pi d - \pi d_0}{\pi d_0} = \frac{7 - 6}{6} = 0.167 \text{ in./in.}$$ **Ans.**

Ans:
$\epsilon = 0.167$ in./in.

2–2. A thin strip of rubber has an unstretched length of 15 in. If it is stretched around a pipe having an outer diameter of 5 in., determine the average normal strain in the strip.

$L_0 = 15$ in.

$L = \pi(5 \text{ in.})$

$$\epsilon = \frac{L - L_0}{L_0} = \frac{5\pi - 15}{15} = 0.0472 \text{ in./in.}$$ **Ans.**

Ans:
$\epsilon = 0.0472$ in./in.

2–3. The rigid beam is supported by a pin at A and wires BD and CE. If the load **P** on the beam causes the end C to be displaced 10 mm downward, determine the normal strain developed in wires CE and BD.

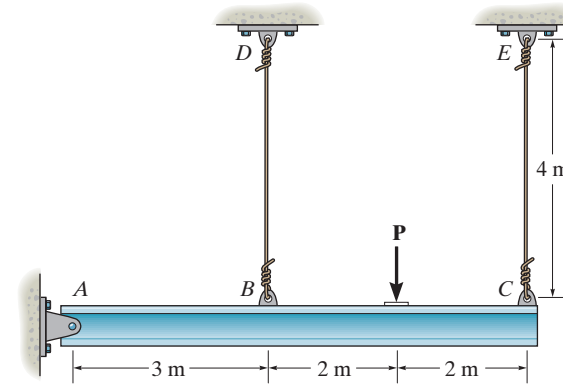

$$\frac{\Delta L_{BD}}{3} = \frac{\Delta L_{CE}}{7}$$

$$\Delta L_{BD} = \frac{3\,(10)}{7} = 4.286 \text{ mm}$$

$$\epsilon_{CE} = \frac{\Delta L_{CE}}{L} = \frac{10}{4000} = 0.00250 \text{ mm/mm}$$ **Ans.**

$$\epsilon_{BD} = \frac{\Delta L_{BD}}{L} = \frac{4.286}{4000} = 0.00107 \text{ mm/mm}$$ **Ans.**

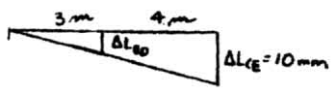

Ans:
$\epsilon_{CE} = 0.00250$ mm/mm, $\epsilon_{BD} = 0.00107$ mm/mm

***2–4.** The force applied at the handle of the rigid lever causes the lever to rotate clockwise about the pin B through an angle of 2°. Determine the average normal strain developed in each wire. The wires are unstretched when the lever is in the horizontal position.

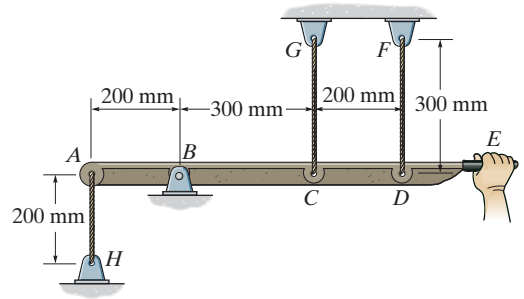

Geometry: The lever arm rotates through an angle of $\theta = \left(\frac{2°}{180}\right)\pi \text{ rad} = 0.03491 \text{ rad}$.
Since θ is small, the displacements of points A, C, and D can be approximated by

$$\delta_A = 200(0.03491) = 6.9813 \text{ mm}$$

$$\delta_C = 300(0.03491) = 10.4720 \text{ mm}$$

$$\delta_D = 500(0.03491) = 17.4533 \text{ mm}$$

Average Normal Strain: The unstretched length of wires AH, CG, and DF are $L_{AH} = 200$ mm, $L_{CG} = 300$ mm, and $L_{DF} = 300$ mm. We obtain

$$(\epsilon_{\text{avg}})_{AH} = \frac{\delta_A}{L_{AH}} = \frac{6.9813}{200} = 0.0349 \text{ mm/mm} \qquad \textbf{Ans.}$$

$$(\epsilon_{\text{avg}})_{CG} = \frac{\delta_C}{L_{CG}} = \frac{10.4720}{300} = 0.0349 \text{ mm/mm} \qquad \textbf{Ans.}$$

$$(\epsilon_{\text{avg}})_{DF} = \frac{\delta_D}{L_{DF}} = \frac{17.4533}{300} = 0.0582 \text{ mm/mm} \qquad \textbf{Ans.}$$

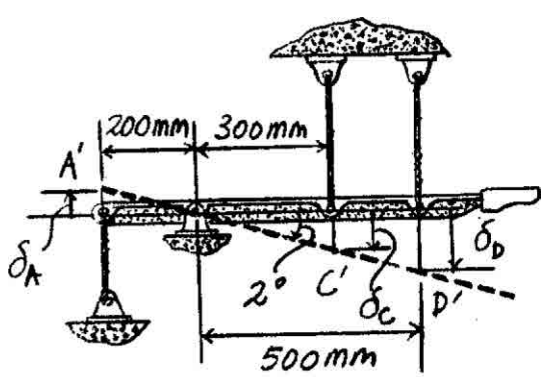

(a)

2–5. The two wires are connected together at A. If the force **P** causes point A to be displaced horizontally 2 mm, determine the normal strain developed in each wire.

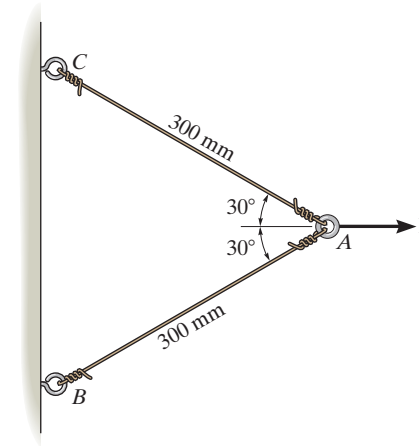

$$L'_{AC} = \sqrt{300^2 + 2^2 - 2(300)(2)\cos 150^\circ} = 301.734 \text{ mm}$$

$$\epsilon_{AC} = \epsilon_{AB} = \frac{L'_{AC} - L_{AC}}{L_{AC}} = \frac{301.734 - 300}{300} = 0.00578 \text{ mm/mm}$$ **Ans.**

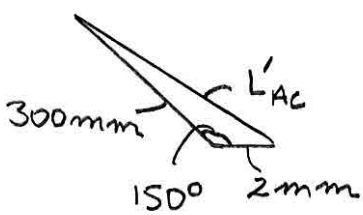

Ans:
$\epsilon_{AC} = \epsilon_{AB} = 0.00578$ mm/mm

2–6. The rubber band of unstretched length $2r_0$ is forced down the frustum of the cone. Determine the average normal strain in the band as a function of z.

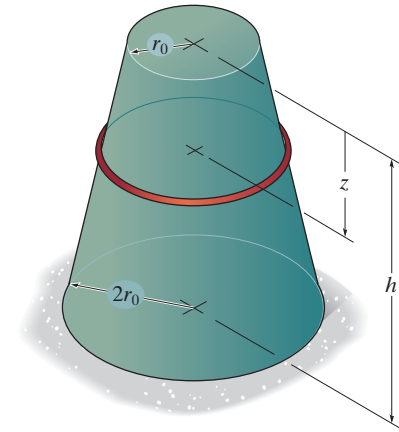

Geometry: Using similar triangles shown in Fig. a,

$$\frac{h'}{r_0} = \frac{h' + h}{2r_0}; \qquad h' = h$$

Subsequently, using the result of h'

$$\frac{r}{z + h} = \frac{r_0}{h}; \qquad r = \frac{r_0}{h}(z + h)$$

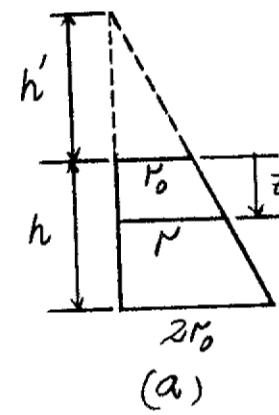

Average Normal Strain: The length of the rubber band as a function of z is $L = 2\pi r = \frac{2\pi r_0}{h}(z+h)$. With $L_0 = 2r_0$, we have

$$\epsilon_{avg} = \frac{L - L_0}{L_0} = \frac{\frac{2\pi r_0}{h}(z + h) - 2r_0}{2r_0} = \frac{\pi}{h}(z + h) - 1 \qquad \textbf{Ans.}$$

Ans:

$$\epsilon_{avg} = \frac{\pi}{h}(z + h) - 1$$

2–7. The pin-connected rigid rods AB and BC are inclined at $\theta = 30°$ when they are unloaded. When the force **P** is applied θ becomes 30.2°. Determine the average normal strain developed in wire AC.

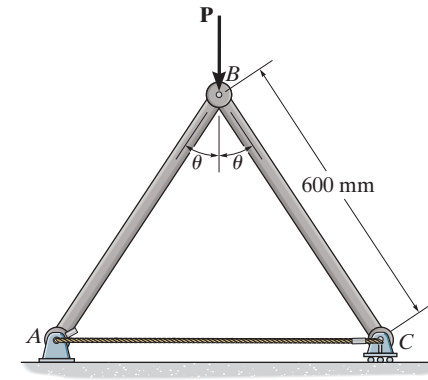

Geometry: Referring to Fig. *a*, the unstretched and stretched lengths of wire AD are

$$L_{AC} = 2(600 \sin 30°) = 600 \text{ mm}$$

$$L_{AC'} = 2(600 \sin 30.2°) = 603.6239 \text{ mm}$$

Average Normal Strain:

$$(\epsilon_{avg})_{AC} = \frac{L_{AC'} - L_{AC}}{L_{AC}} = \frac{603.6239 - 600}{600} = 6.04(10^{-3}) \text{ mm/mm} \qquad \textbf{Ans.}$$

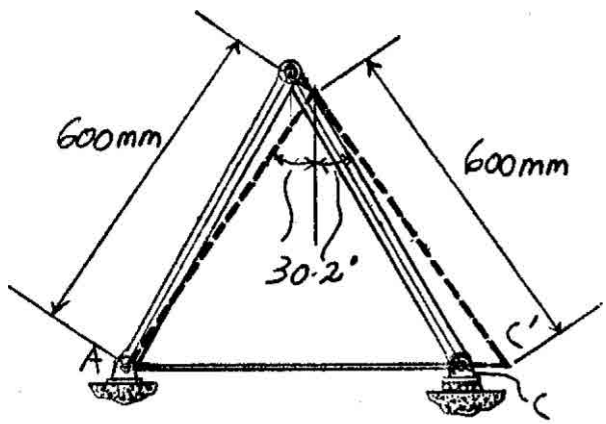

(a)

Ans:
$(\epsilon_{avg})_{AC} = 6.04(10^{-3}) \text{ mm/mm}$

***2–8.** Part of a control linkage for an airplane consists of a rigid member CBD and a flexible cable AB. If a force is applied to the end D of the member and causes it to rotate by $\theta = 0.3°$, determine the normal strain in the cable. Originally the cable is unstretched.

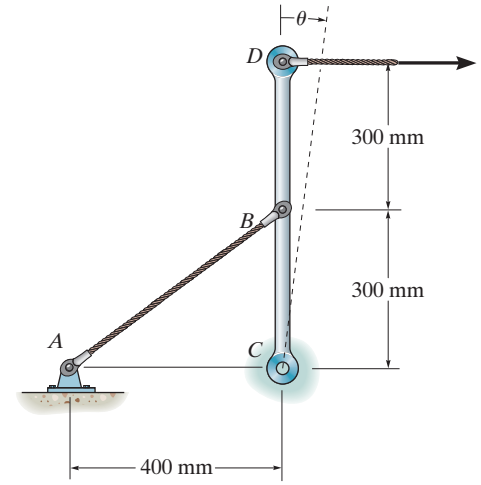

$$AB = \sqrt{400^2 + 300^2} = 500 \text{ mm}$$

$$AB' = \sqrt{400^2 + 300^2 - 2(400)(300)\cos 90.3°}$$

$$= 501.255 \text{ mm}$$

$$\epsilon_{AB} = \frac{AB' - AB}{AB} = \frac{501.255 - 500}{500}$$

$$= 0.00251 \text{ mm/mm}$$ **Ans.**

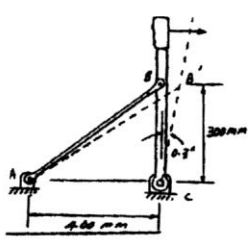

2–9. Part of a control linkage for an airplane consists of a rigid member CBD and a flexible cable AB. If a force is applied to the end D of the member and causes a normal strain in the cable of 0.0035 mm/mm, determine the displacement of point D. Originally the cable is unstretched.

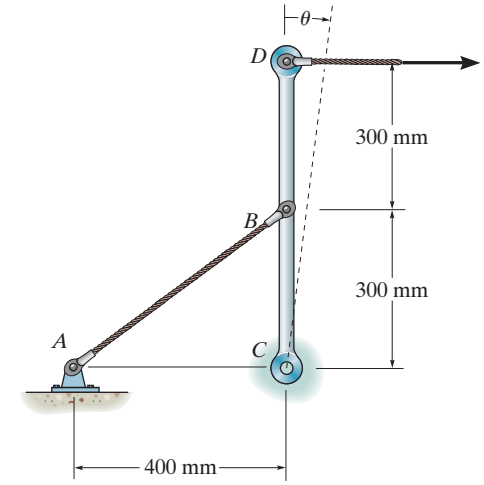

$$AB = \sqrt{300^2 + 400^2} = 500 \text{ mm}$$

$$AB' = AB + \varepsilon_{AB} AB$$

$$= 500 + 0.0035(500) = 501.75 \text{ mm}$$

$$501.75^2 = 300^2 + 400^2 - 2(300)(400)\cos\alpha$$

$$\alpha = 90.4185°$$

$$\theta = 90.4185° - 90° = 0.4185° = \frac{\pi}{180°}(0.4185) \text{ rad}$$

$$\Delta_D = 600(\theta) = 600\left(\frac{\pi}{180°}\right)(0.4185) = 4.38 \text{ mm}$$ **Ans.**

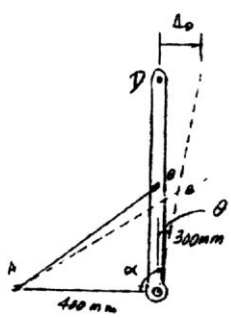

Ans:
$\Delta_D = 4.38$ mm

2–10. The corners of the square plate are given the displacements indicated. Determine the shear strain along the edges of the plate at A and B.

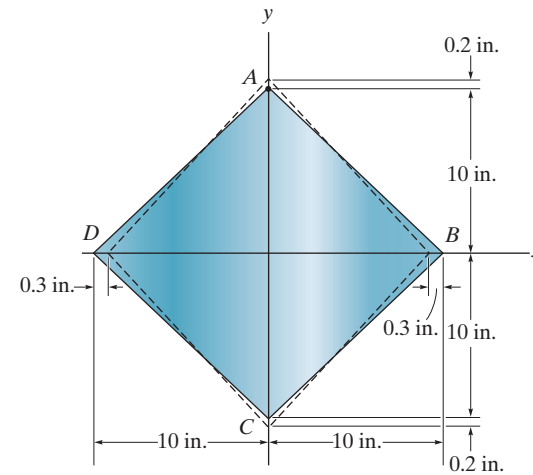

At A:

$$\frac{\theta'}{2} = \tan^{-1}\left(\frac{9.7}{10.2}\right) = 43.561°$$

$$\theta' = 1.52056 \text{ rad}$$

$$(\gamma_A)_{nt} = \frac{\pi}{2} - 1.52056$$

$$= 0.0502 \text{ rad}$$ **Ans.**

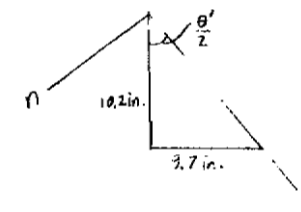

At B:

$$\frac{\phi'}{2} = \tan^{-1}\left(\frac{10.2}{9.7}\right) = 46.439°$$

$$\phi' = 1.62104 \text{ rad}$$

$$(\gamma_B)_{nt} = \frac{\pi}{2} - 1.62104$$

$$= -0.0502 \text{ rad}$$ **Ans.**

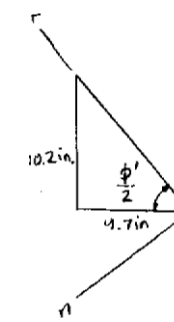

Ans:
$(\gamma_A)_{nt} = 0.0502$ rad, $(\gamma_B)_{nt} = -0.0502$ rad

2–11. The corners of the square plate are given the displacements indicated. Determine the average normal strains along side AB and diagonals AC and DB.

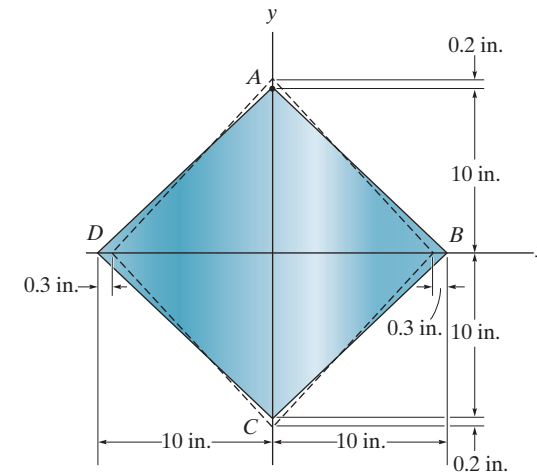

For AB:

$$A'B' = \sqrt{(10.2)^2 + (9.7)^2} = 14.0759 \text{ in.}$$

$$AB = \sqrt{(10)^2 + (10)^2} = 14.14214 \text{ in.}$$

$$\epsilon_{AB} = \frac{14.0759 - 14.14214}{14.14214} = -0.00469 \text{ in./in.} \qquad \textbf{Ans.}$$

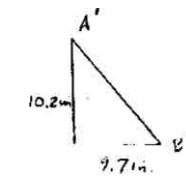

For AC:

$$\epsilon_{AC} = \frac{20.4 - 20}{20} = 0.0200 \text{ in./in.} \qquad \textbf{Ans.}$$

For DB:

$$\epsilon_{DB} = \frac{19.4 - 20}{20} = -0.0300 \text{ in./in.} \qquad \textbf{Ans.}$$

Ans:
$\epsilon_{AB} = -0.00469$ in./in., $\epsilon_{AC} = 0.0200$ in./in.,
$\epsilon_{DB} = -0.0300$ in./in.

***2–12.** The piece of rubber is originally rectangular. Determine the average shear strain γ_{xy} at A if the corners B and D are subjected to the displacements that cause the rubber to distort as shown by the dashed lines.

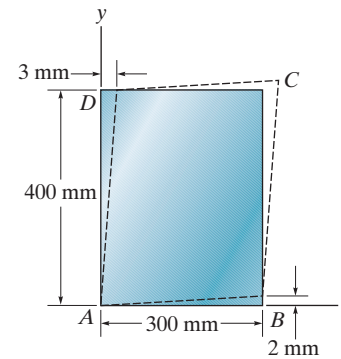

$$\theta_1 = \tan\theta_1 = \frac{2}{300} = 0.006667 \text{ rad}$$

$$\theta_2 = \tan\theta_2 = \frac{3}{400} = 0.0075 \text{ rad}$$

$$\gamma_{xy} = \theta_1 + \theta_2$$

$$= 0.006667 + 0.0075 = 0.0142 \text{ rad}$$ **Ans.**

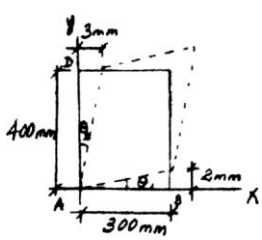

2–13. The piece of rubber is originally rectangular and subjected to the deformation shown by the dashed lines. Determine the average normal strain along the diagonal DB and side AD.

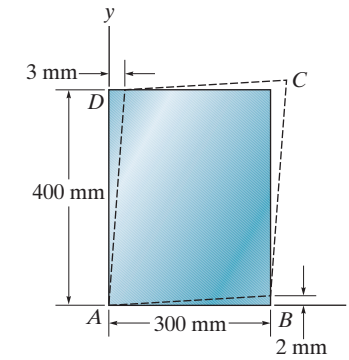

$$AD' = \sqrt{(400)^2 + (3)^2} = 400.01125 \text{ mm}$$

$$\phi = \tan^{-1}\left(\frac{3}{400}\right) = 0.42971°$$

$$AB' = \sqrt{(300)^2 + (2)^2} = 300.00667$$

$$\varphi = \tan^{-1}\left(\frac{2}{300}\right) = 0.381966°$$

$$\alpha = 90° - 0.42971° - 0.381966° = 89.18832°$$

$$D'B' = \sqrt{(400.01125)^2 + (300.00667)^2 - 2(400.01125)(300.00667)\cos(89.18832°)}$$

$$D'B' = 496.6014 \text{ mm}$$

$$DB = \sqrt{(300)^2 + (400)^2} = 500 \text{ mm}$$

$$\epsilon_{DB} = \frac{496.6014 - 500}{500} = -0.00680 \text{ mm/mm} \qquad \textbf{Ans.}$$

$$\epsilon_{AD} = \frac{400.01125 - 400}{400} = 0.0281(10^{-3}) \text{ mm/mm} \qquad \textbf{Ans.}$$

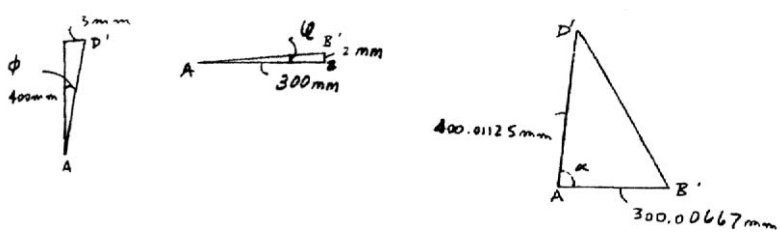

Ans:
$\epsilon_{DB} = -0.00680$ mm/mm,
$\epsilon_{AD} = 0.0281(10^{-3})$ mm/mm

2–14. The force **P** applied at joint D of the square frame causes the frame to sway and form the dashed rhombus. Determine the average normal strain developed in wire AC. Assume the three rods are rigid.

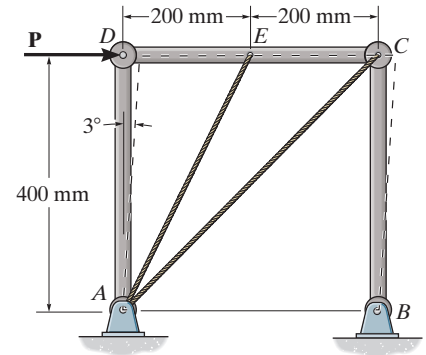

Geometry: Referring to Fig. a, the stretched length of $L_{AC'}$ of wire AC' can be determined using the cosine law.

$$L_{AC'} = \sqrt{400^2 + 400^2 - 2(400)(400)\cos 93^\circ} = 580.30 \text{ mm}$$

The unstretched length of wire AC is

$$L_{AC} = \sqrt{400^2 + 400^2} = 565.69 \text{ mm}$$

Average Normal Strain:

$$(\epsilon_{avg})_{AC} = \frac{L_{AC'} - L_{AC}}{L_{AC}} = \frac{580.30 - 565.69}{565.69} = 0.0258 \text{ mm/mm} \qquad \textbf{Ans.}$$

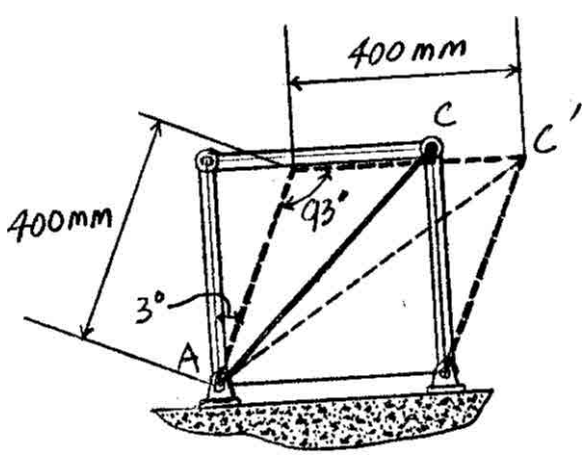

(a)

Ans:
$(\epsilon_{avg})_{AC} = 0.0258$ mm/mm

2–15. The force **P** applied at joint D of the square frame causes the frame to sway and form the dashed rhombus. Determine the average normal strain developed in wire AE. Assume the three rods are rigid.

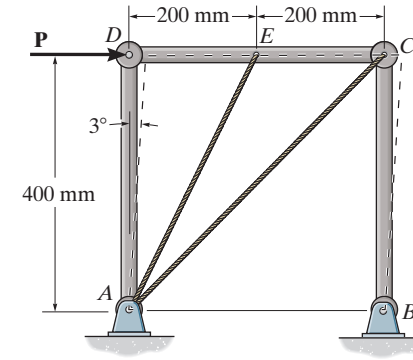

Geometry: Referring to Fig. *a*, the stretched length of $L_{AE'}$ of wire AE can be determined using the cosine law.

$$L_{AE'} = \sqrt{400^2 + 200^2 - 2(400)(200)\cos 93^\circ} = 456.48 \text{ mm}$$

The unstretched length of wire AE is

$$L_{AE} = \sqrt{400^2 + 200^2} = 447.21 \text{ mm}$$

Average Normal Strain:

$$(\epsilon_{\text{avg}})_{AE} = \frac{L_{AE'} - L_{AE}}{L_{AE}} = \frac{456.48 - 447.21}{447.21} = 0.0207 \text{ mm/mm} \qquad \textbf{Ans.}$$

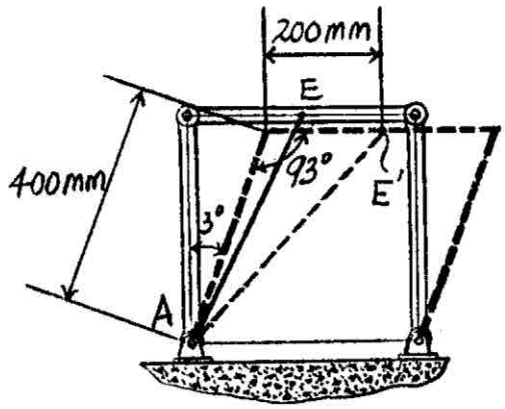

(a)

Ans:
$(\epsilon_{\text{avg}})_{AE} = 0.0207$ mm/mm

***2–16.** The triangular plate ABC is deformed into the shape shown by the dashed lines. If at A, $\varepsilon_{AB} = 0.0075$, $\epsilon_{AC} = 0.01$ and $\gamma_{xy} = 0.005$ rad, determine the average normal strain along edge BC.

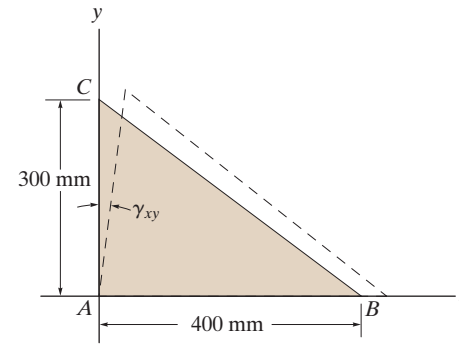

Average Normal Strain: The stretched length of sides AB and AC are

$$L_{AC'} = (1 + \varepsilon_y)L_{AC} = (1 + 0.01)(300) = 303 \text{ mm}$$

$$L_{AB'} = (1 + \varepsilon_x)L_{AB} = (1 + 0.0075)(400) = 403 \text{ mm}$$

Also,

$$\theta = \frac{\pi}{2} - 0.005 = 1.5658 \text{ rad}\left(\frac{180°}{\pi \text{ rad}}\right) = 89.7135°$$

The unstretched length of edge BC is

$$L_{BC} = \sqrt{300^2 + 400^2} = 500 \text{ mm}$$

and the stretched length of this edge is

$$L_{B'C'} = \sqrt{303^2 + 403^2 - 2(303)(403)\cos 89.7135°}$$

$$= 502.9880 \text{ mm}$$

We obtain,

$$\epsilon_{BC} = \frac{L_{B'C'} - L_{BC}}{L_{BC}} = \frac{502.9880 - 500}{500} = 5.98(10^{-3}) \text{ mm/mm} \qquad \textbf{Ans.}$$

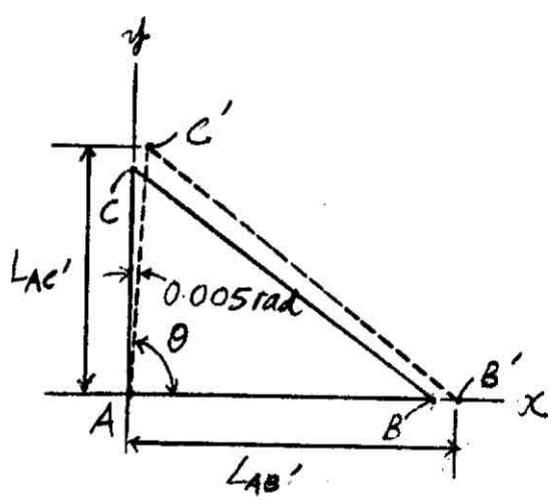

(a)

2–17. The plate is deformed uniformly into the shape shown by the dashed lines. If at A, $\gamma_{xy} = 0.0075$ rad., while $\epsilon_{AB} = \epsilon_{AF} = 0$, determine the average shear strain at point G with respect to the x' and y' axes.

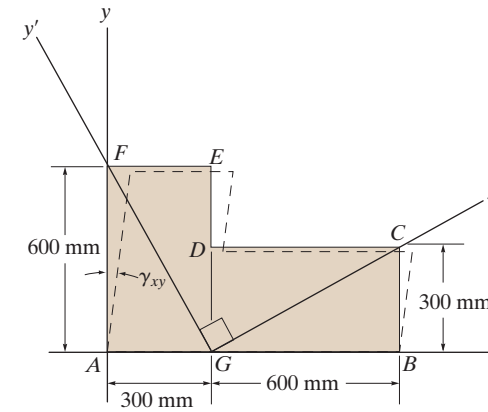

Geometry: Here, $\gamma_{xy} = 0.0075 \text{ rad}\left(\dfrac{180°}{\pi \text{ rad}}\right) = 0.4297°$. Thus,

$$\psi = 90° - 0.4297° = 89.5703° \qquad \beta = 90° + 0.4297° = 90.4297°$$

Subsequently, applying the cosine law to triangles AGF' and GBC', Fig. a,

$$L_{GF'} = \sqrt{600^2 + 300^2 - 2(600)(300)\cos 89.5703°} = 668.8049 \text{ mm}$$

$$L_{GC'} = \sqrt{600^2 + 300^2 - 2(600)(300)\cos 90.4297°} = 672.8298 \text{ mm}$$

Then, applying the sine law to the same triangles,

$$\frac{\sin\phi}{600} = \frac{\sin 89.5703°}{668.8049}; \qquad \phi = 63.7791°$$

$$\frac{\sin\alpha}{300} = \frac{\sin 90.4297°}{672.8298}; \qquad \alpha = 26.4787°$$

Thus,

$$\theta = 180° - \phi - \alpha = 180° - 63.7791° - 26.4787°$$

$$= 89.7422°\left(\frac{\pi \text{ rad}}{180°}\right) = 1.5663 \text{ rad}$$

Shear Strain:

$$(\gamma_G)_{x'y'} = \frac{\pi}{2} - \theta = \frac{\pi}{2} - 1.5663 = 4.50(10^{-3}) \text{ rad} \qquad \textbf{Ans.}$$

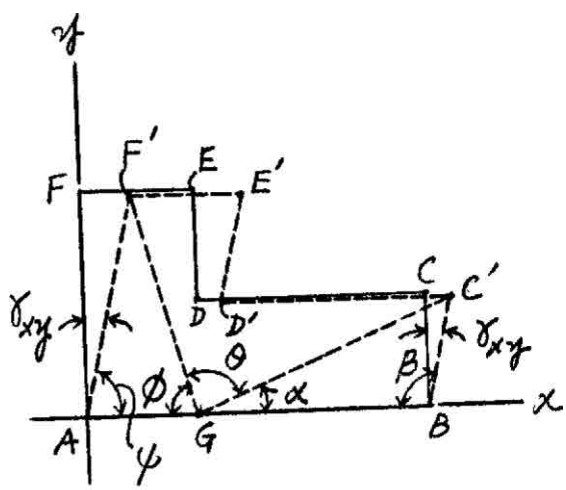

(a)

Ans:
$(\gamma_G)_{x'y'} = 4.50(10^{-3})$ rad

2–18. The piece of plastic is originally rectangular. Determine the shear strain γ_{xy} at corners A and B if the plastic distorts as shown by the dashed lines.

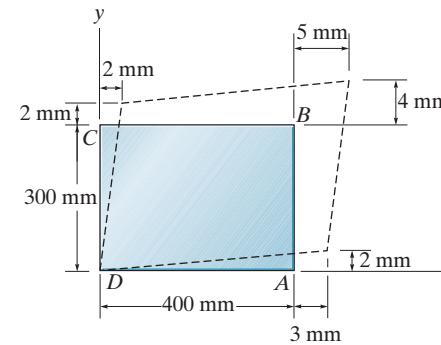

Geometry: For small angles,

$$\alpha = \psi = \frac{2}{302} = 0.00662252 \text{ rad}$$

$$\beta = \theta = \frac{2}{403} = 0.00496278 \text{ rad}$$

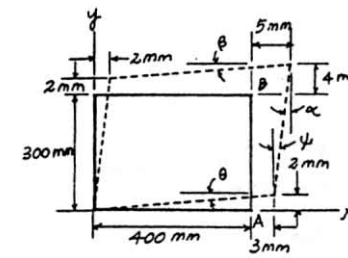

Shear Strain:

$$(\gamma_B)_{xy} = \alpha + \beta$$

$$= 0.0116 \text{ rad} = 11.6\left(10^{-3}\right) \text{ rad}$$ **Ans.**

$$(\gamma_A)_{xy} = \theta + \psi$$

$$= 0.0116 \text{ rad} = 11.6\left(10^{-3}\right) \text{ rad}$$ **Ans.**

Ans:
$(\gamma_B)_{xy} = 11.6(10^{-3})$ rad,
$(\gamma_A)_{xy} = 11.6(10^{-3})$ rad

2–19. The piece of plastic is originally rectangular. Determine the shear strain γ_{xy} at corners D and C if the plastic distorts as shown by the dashed lines.

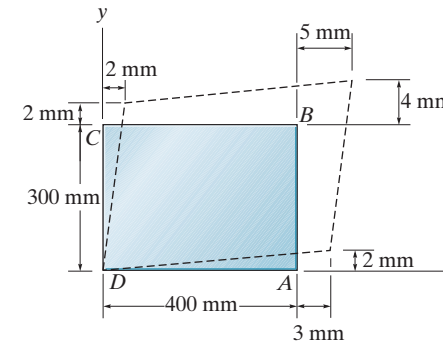

Geometry: For small angles,

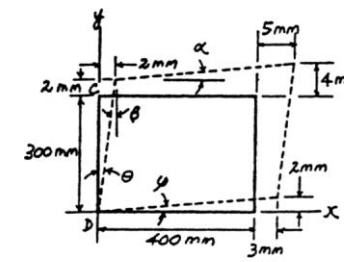

$$\alpha = \psi = \frac{2}{403} = 0.00496278 \text{ rad}$$

$$\beta = \theta = \frac{2}{302} = 0.00662252 \text{ rad}$$

Shear Strain:

$$(\gamma_C)_{xy} = \alpha + \beta$$

$$= 0.0116 \text{ rad} = 11.6\left(10^{-3}\right) \text{ rad} \qquad \textbf{Ans.}$$

$$(\gamma_D)_{xy} = \theta + \psi$$

$$= 0.0116 \text{ rad} = 11.6\left(10^{-3}\right) \text{ rad} \qquad \textbf{Ans.}$$

Ans:
$(\gamma_C)_{xy} = 11.6(10^{-3})$ rad,
$(\gamma_D)_{xy} = 11.6(10^{-3})$ rad

***2–20.** The piece of plastic is originally rectangular. Determine the average normal strain that occurs along the diagonals AC and DB.

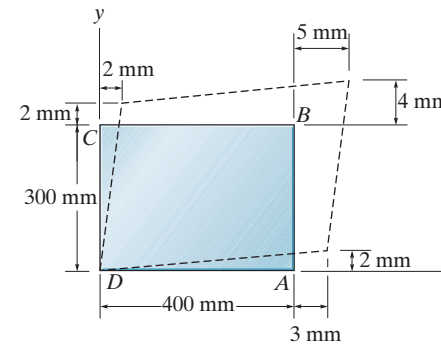

Geometry:

$$AC = DB = \sqrt{400^2 + 300^2} = 500 \text{ mm}$$

$$DB' = \sqrt{405^2 + 304^2} = 506.4 \text{ mm}$$

$$A'C' = \sqrt{401^2 + 300^2} = 500.8 \text{ mm}$$

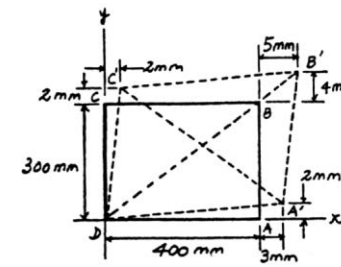

Average Normal Strain:

$$\epsilon_{AC} = \frac{A'C' - AC}{AC} = \frac{500.8 - 500}{500}$$

$$= 0.00160 \text{ mm/mm} = 1.60\left(10^{-3}\right) \text{ mm/mm}$$ **Ans.**

$$\epsilon_{DB} = \frac{DB' - DB}{DB} = \frac{506.4 - 500}{500}$$

$$= 0.0128 \text{ mm/mm} = 12.8\left(10^{-3}\right) \text{ mm/mm}$$ **Ans.**

2–21. The rectangular plate is deformed into the shape of a parallelogram shown by the dashed lines. Determine the average shear strain γ_{xy} at corners A and B.

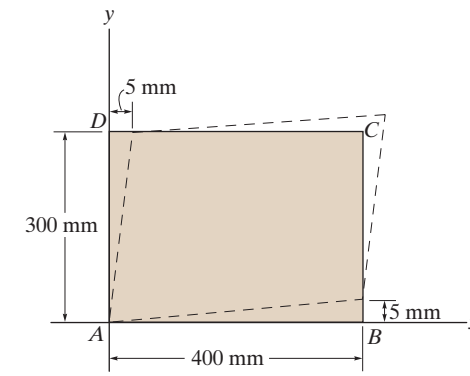

Geometry: Referring to Fig. *a* and using small angle analysis,

$$\theta = \frac{5}{300} = 0.01667 \text{ rad}$$

$$\phi = \frac{5}{400} = 0.0125 \text{ rad}$$

Shear Strain: Referring to Fig. *a*,

$$(\gamma_A)_{xy} = \theta + \phi = 0.01667 + 0.0125 = 0.0292 \text{ rad} \qquad \textbf{Ans.}$$

$$(\gamma_B)_{xy} = \theta + \phi = 0.01667 + 0.0125 = 0.0292 \text{ rad} \qquad \textbf{Ans.}$$

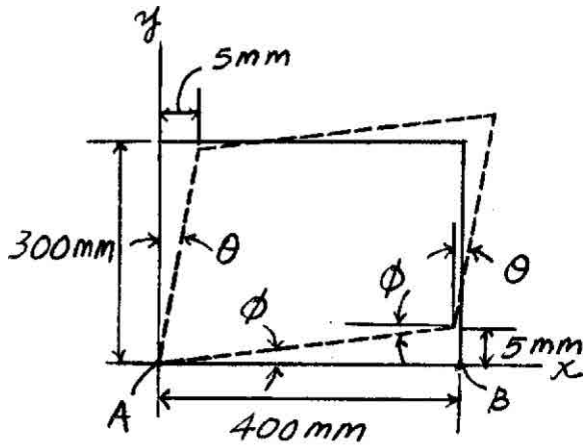

(a)

Ans:
$(\gamma_A)_{xy} = 0.0292$ rad, $(\gamma_B)_{xy} = 0.0292$ rad

2–22. The triangular plate is fixed at its base, and its apex A is given a horizontal displacement of 5 mm. Determine the shear strain, γ_{xy}, at A.

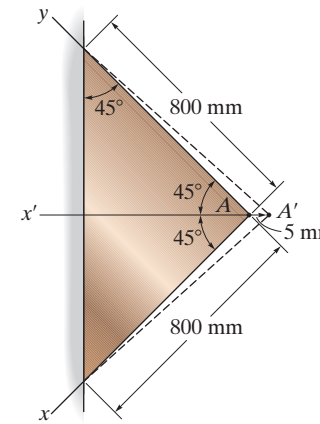

$$L = \sqrt{800^2 + 5^2 - 2(800)(5)\cos 135°} = 803.54 \text{ mm}$$

$$\frac{\sin 135°}{803.54} = \frac{\sin\theta}{800}; \qquad \theta = 44.75° = 0.7810 \text{ rad}$$

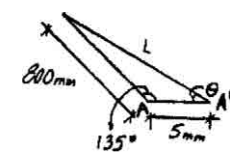

$$\gamma_{xy} = \frac{\pi}{2} - 2\theta = \frac{\pi}{2} - 2(0.7810)$$

$$= 0.00880 \text{ rad}$$ **Ans.**

Ans:
$\gamma_{xy} = 0.00880$ rad

2–23. The triangular plate is fixed at its base, and its apex A is given a horizontal displacement of 5 mm. Determine the average normal strain ϵ_x along the x axis.

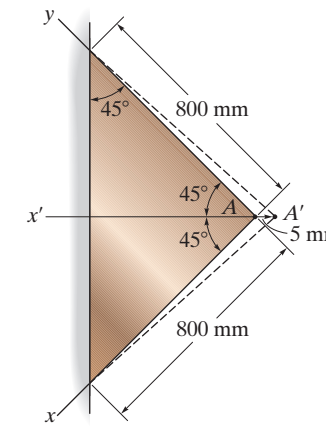

$$L = \sqrt{800^2 + 5^2 - 2(800)(5)\cos 135°} = 803.54 \text{ mm}$$

$$\epsilon_x = \frac{803.54 - 800}{800} = 0.00443 \text{ mm/mm}$$ **Ans.**

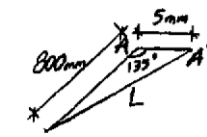

Ans:
$\epsilon_x = 0.00443$ mm/mm

***2–24.** The triangular plate is fixed at its base, and its apex A is given a horizontal displacement of 5 mm. Determine the average normal strain $\epsilon_{x'}$ along the x' axis.

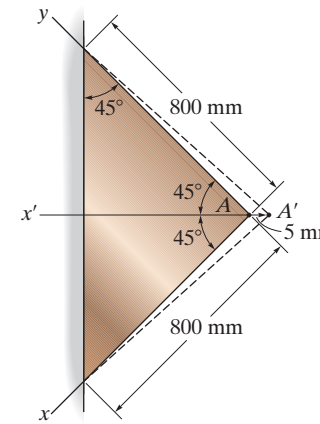

$L = 800 \cos 45° = 565.69$ mm

$$\epsilon_{x'} = \frac{5}{565.69} = 0.00884 \text{ mm/mm}$$ **Ans.**

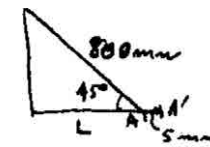

2–25. The square rubber block is subjected to a shear strain of $\gamma_{xy} = 40(10^{-6})x + 20(10^{-6})y$, where x and y are in mm. This deformation is in the shape shown by the dashed lines, where all the lines parallel to the y axis remain vertical after the deformation. Determine the normal strain along edge BC.

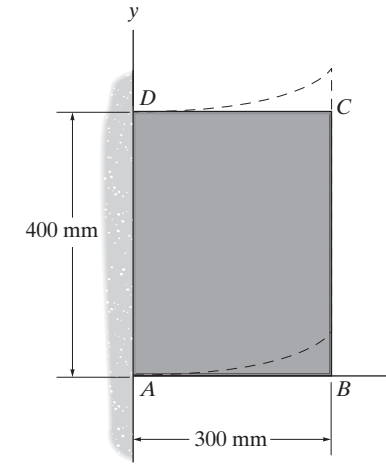

Shear Strain: Along edge DC, $y = 400$ mm. Thus, $(\gamma_{xy})_{DC} = 40(10^{-6})x + 0.008$. Here, $\dfrac{dy}{dx} = \tan(\gamma_{xy})_{DC} = \tan[40(10^{-6})x + 0.008]$. Then,

$$\int_0^{\delta_c} dy = \int_0^{300\text{ mm}} \tan[40(10^{-6})x + 0.008]dx$$

$$\delta_c = -\frac{1}{40(10^{-6})}\left\{\ln\cos\left[40(10^{-6})x + 0.008\right]\right\}\Big|_0^{300\text{ mm}}$$

$$= 4.2003 \text{ mm}$$

Along edge AB, $y = 0$. Thus, $(\gamma_{xy})_{AB} = 40(10^{-6})x$. Here, $\dfrac{dy}{dx} = \tan(\gamma_{xy})_{AB} = \tan[40(10^{-6})x]$. Then,

$$\int_0^{\delta_B} dy = \int_0^{300\text{ mm}} \tan[40(10^{-6})x]dx$$

$$\delta_B = -\frac{1}{40(10^{-6})}\left\{\ln\cos\left[40(10^{-6})x\right]\right\}\Big|_0^{300\text{ mm}}$$

$$= 1.8000 \text{ mm}$$

Average Normal Strain: The stretched length of edge BC is

$$L_{B'C'} = 400 + 4.2003 - 1.8000 = 402.4003 \text{ mm}$$

We obtain,

$$(\epsilon_{\text{avg}})_{BC} = \frac{L_{B'C'} - L_{BC}}{L_{BC}} = \frac{402.4003 - 400}{400} = 6.00(10^{-3}) \text{ mm/mm} \qquad \textbf{Ans.}$$

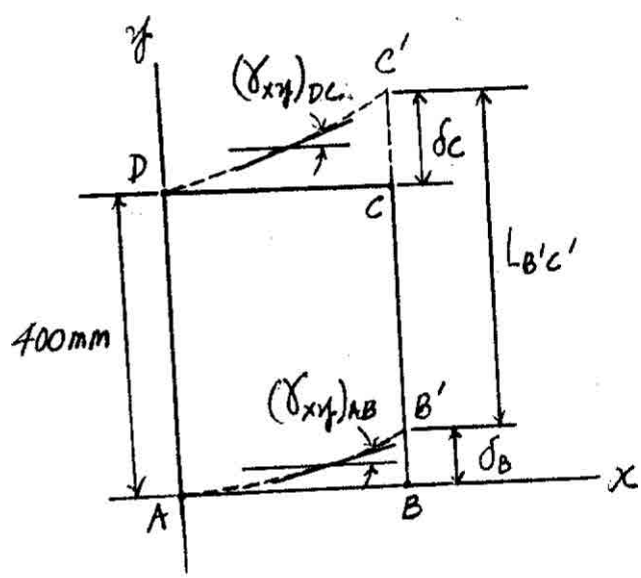

(a)

Ans:
$(\epsilon_{\text{avg}})_{BC} = 6.00(10^{-3})$ mm/mm

2–26. The square plate is deformed into the shape shown by the dashed lines. If DC has a normal strain $\epsilon_x = 0.004$, DA has a normal strain $\epsilon_y = 0.005$ and at D, $\gamma_{xy} = 0.02$ rad, determine the average normal strain along diagonal CA.

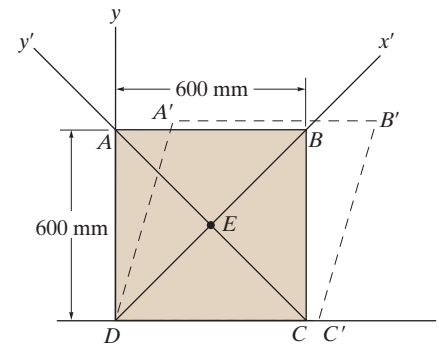

Average Normal Strain: The stretched length of sides DA and DC are

$$L_{DC'} = (1 + \epsilon_x)L_{DC} = (1 + 0.004)(600) = 602.4 \text{ mm}$$

$$L_{DA'} = (1 + \epsilon_y)L_{DA} = (1 + 0.005)(600) = 603 \text{ mm}$$

Also,

$$\alpha = \frac{\pi}{2} - 0.02 = 1.5508 \text{ rad}\left(\frac{180°}{\pi \text{ rad}}\right) = 88.854°$$

Thus, the length of $C'A'$ can be determined using the cosine law with reference to Fig. *a*.

$$L_{C'A'} = \sqrt{602.4^2 + 603^2 - 2(602.4)(603)\cos 88.854°}$$

$$= 843.7807 \text{ mm}$$

The original length of diagonal CA can be determined using Pythagorean's theorem.

$$L_{CA} = \sqrt{600^2 + 600^2} = 848.5281 \text{ mm}$$

Thus,

$$(\epsilon_{\text{avg}})_{CA} = \frac{L_{C'A'} - L_{CA}}{L_{CA}} = \frac{843.7807 - 848.5281}{848.5281} = -5.59(10^{-3}) \text{ mm/mm} \quad \textbf{Ans.}$$

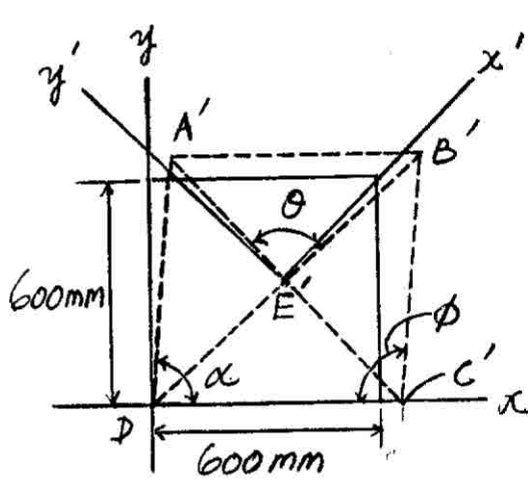

(a)

Ans:
$(\epsilon_{\text{avg}})_{CA} = -5.59(10^{-3})$ mm/mm

2–27. The square plate $ABCD$ is deformed into the shape shown by the dashed lines. If DC has a normal strain $\epsilon_x = 0.004$, DA has a normal strain $\epsilon_y = 0.005$ and at D, $\gamma_{xy} = 0.02$ rad, determine the shear strain at point E with respect to the x' and y' axes.

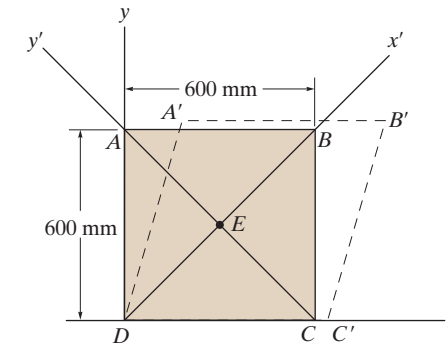

Average Normal Strain: The stretched length of sides DC and BC are

$$L_{DC'} = (1 + \epsilon_x)L_{DC} = (1 + 0.004)(600) = 602.4 \text{ mm}$$

$$L_{B'C'} = (1 + \epsilon_y)L_{BC} = (1 + 0.005)(600) = 603 \text{ mm}$$

Also,

$$\alpha = \frac{\pi}{2} - 0.02 = 1.5508 \text{ rad}\left(\frac{180°}{\pi \text{ rad}}\right) = 88.854°$$

$$\phi = \frac{\pi}{2} + 0.02 = 1.5908 \text{ rad}\left(\frac{180°}{\pi \text{ rad}}\right) = 91.146°$$

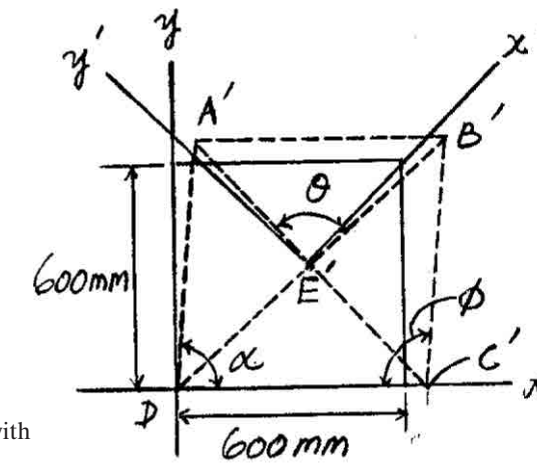

(a)

Thus, the length of $C'A'$ and DB' can be determined using the cosine law with reference to Fig. *a*.

$$L_{C'A'} = \sqrt{602.4^2 + 603^2 - 2(602.4)(603)\cos 88.854°} = 843.7807 \text{ mm}$$

$$L_{DB'} = \sqrt{602.4^2 + 603^2 - 2(602.4)(603)\cos 91.146°} = 860.8273 \text{ mm}$$

Thus,

$$L_{E'A'} = \frac{L_{C'A'}}{2} = 421.8903 \text{ mm} \qquad L_{E'B'} = \frac{L_{DB'}}{2} = 430.4137 \text{ mm}$$

Using this result and applying the cosine law to the triangle $A'E'B'$, Fig. *a*,

$$602.4^2 = 421.8903^2 + 430.4137^2 - 2(421.8903)(430.4137)\cos\theta$$

$$\theta = 89.9429°\left(\frac{\pi \text{ rad}}{180°}\right) = 1.5698 \text{ rad}$$

Shear Strain:

$$(\gamma_E)_{x'y'} = \frac{\pi}{2} - \theta = \frac{\pi}{2} - 1.5698 = 0.996(10^{-3}) \text{ rad} \qquad \textbf{Ans.}$$

Ans:
$(\gamma_E)_{x'y'} = 0.996(10^{-3})$ rad

***2–28.** The wire is subjected to a normal strain that is defined by $\epsilon = (x/L)e^{-(x/L)^2}$. If the wire has an initial length L, determine the increase in its length.

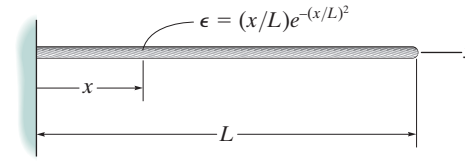

$$\Delta L = \frac{1}{L}\int_0^L xe^{-(x/L)^2}dx$$

$$= -L\left[\frac{e^{-(x/L)^2}}{2}\right]_0^L = \frac{L}{2}[1 - (1/e)]$$

$$= \frac{L}{2e}[e - 1]$$ **Ans.**

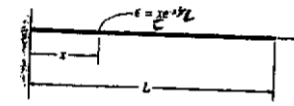

2–29. The rectangular plate is deformed into the shape shown by the dashed lines. Determine the average normal strain along diagonal AC, and the average shear strain at corner A.

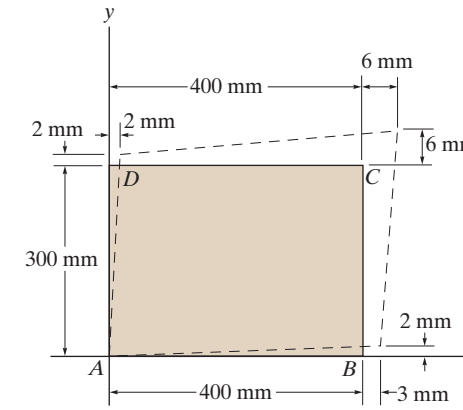

Geometry: The unstretched length of diagonal AC is

$$L_{AC} = \sqrt{300^2 + 400^2} = 500 \text{ mm}$$

Referring to Fig. a, the stretched length of diagonal AC is

$$L_{AC'} = \sqrt{(400 + 6)^2 + (300 + 6)^2} = 508.4014 \text{ mm}$$

Referring to Fig. a and using small angle analysis,

$$\phi = \frac{2}{300 + 2} = 0.006623 \text{ rad}$$

$$\alpha = \frac{2}{400 + 3} = 0.004963 \text{ rad}$$

Average Normal Strain: Applying Eq. 2,

$$(\epsilon_{\text{avg}})_{AC} = \frac{L_{AC'} - L_{AC}}{L_{AC}} = \frac{508.4014 - 500}{500} = 0.0168 \text{ mm/mm} \qquad \textbf{Ans.}$$

Shear Strain: Referring to Fig. a,

$$(\gamma_A)_{xy} = \phi + \alpha = 0.006623 + 0.004963 = 0.0116 \text{ rad} \qquad \textbf{Ans.}$$

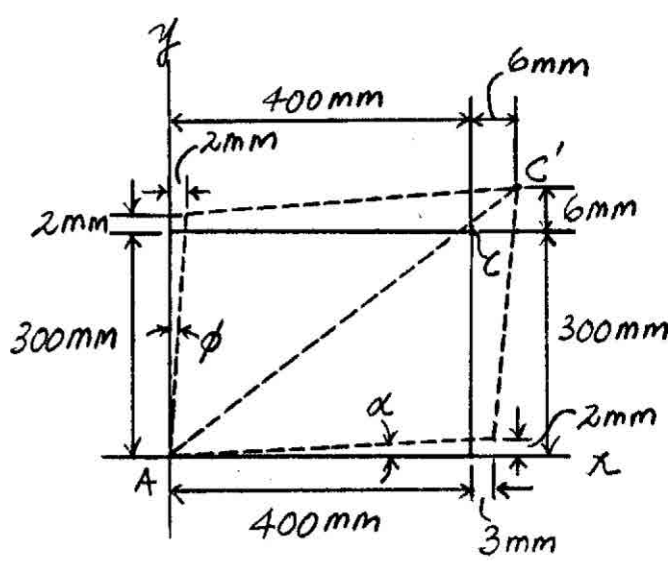

(a)

Ans:
$(\epsilon_{\text{avg}})_{AC} = 0.0168$ mm/mm, $(\gamma_A)_{xy} = 0.0116$ rad

2–30. The rectangular plate is deformed into the shape shown by the dashed lines. Determine the average normal strain along diagonal BD, and the average shear strain at corner B.

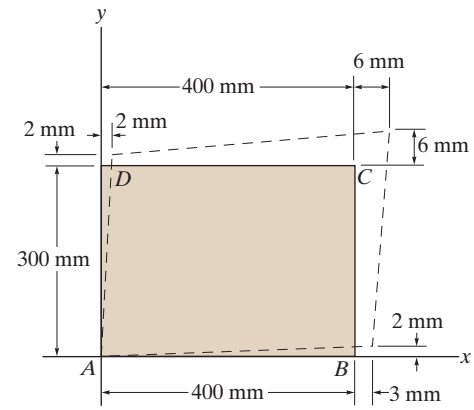

Geometry: The unstretched length of diagonal BD is

$$L_{BD} = \sqrt{300^2 + 400^2} = 500 \text{ mm}$$

Referring to Fig. a, the stretched length of diagonal BD is

$$L_{B'D'} = \sqrt{(300 + 2 - 2)^2 + (400 + 3 - 2)^2} = 500.8004 \text{ mm}$$

Referring to Fig. a and using small angle analysis,

$$\phi = \frac{2}{403} = 0.004963 \text{ rad}$$

$$\alpha = \frac{3}{300 + 6 - 2} = 0.009868 \text{ rad}$$

Average Normal Strain: Applying Eq. 2,

$$(\epsilon_{\text{avg}})_{BD} = \frac{L_{B'D'} - L_{BD}}{L_{BD}} = \frac{500.8004 - 500}{500} = 1.60(10^{-3}) \text{ mm/mm} \quad \textbf{Ans.}$$

Shear Strain: Referring to Fig. a,

$$(\gamma_B)_{xy} = \phi + \alpha = 0.004963 + 0.009868 = 0.0148 \text{ rad} \quad \textbf{Ans.}$$

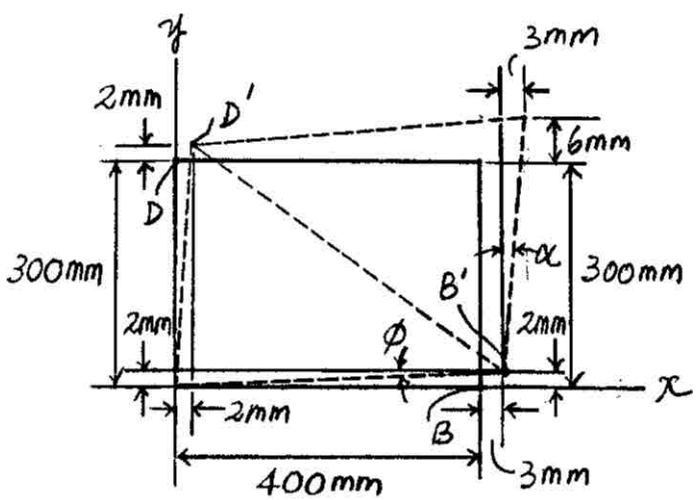

(a)

Ans:
$(\epsilon_{\text{avg}})_{BD} = 1.60(10^{-3})$ mm/mm,
$(\gamma_B)_{xy} = 0.0148$ rad

2–31. The nonuniform loading causes a normal strain in the shaft that can be expressed as $\epsilon_x = kx^2$, where k is a constant. Determine the displacement of the end B. Also, what is the average normal strain in the rod?

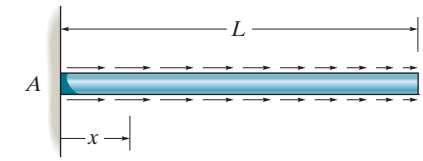

$$\frac{d(\Delta x)}{dx} = \epsilon_x = kx^2$$

$$(\Delta x)_B = \int_0^L kx^2 = \frac{kL^3}{3}$$ **Ans.**

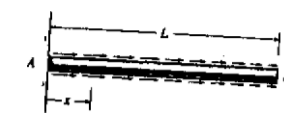

$$(\epsilon_x)_{\text{avg}} = \frac{(\Delta x)_B}{L} = \frac{\frac{kL^3}{3}}{L} = \frac{kL^2}{3}$$ **Ans.**

Ans:

$$(\Delta x)_B = \frac{kL^3}{3}, (\epsilon_x)_{\text{avg}} = \frac{kL^2}{3}$$

***2–32** The rubber block is fixed along edge AB, and edge CD is moved so that the vertical displacement of any point in the block is given by $v(x) = (v_0/b^3)x^3$. Determine the shear strain γ_{xy} at points $(b/2, a/2)$ and (b, a).

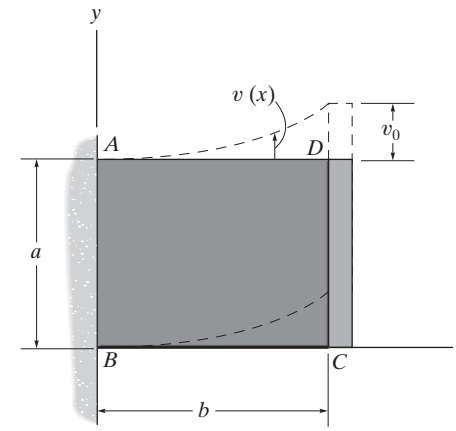

Shear Strain: From Fig. *a*,

$$\frac{dv}{dx} = \tan\gamma_{xy}$$

$$\frac{3v_0}{b^3}x^2 = \tan\gamma_{xy}$$

$$\gamma_{xy} = \tan^{-1}\left(\frac{3v_0}{b^3}x^2\right)$$

Thus, at point $(b/2, a/2)$,

$$\gamma_{xy} = \tan^{-1}\left[\frac{3v_0}{b^3}\left(\frac{b}{2}\right)^2\right]$$

$$= \tan^{-1}\left[\frac{3}{4}\left(\frac{v_0}{b}\right)\right] \qquad \textbf{Ans.}$$

and at point (b, a),

$$\gamma_{xy} = \tan^{-1}\left[\frac{3v_0}{b^3}(b^2)\right]$$

$$= \tan^{-1}\left[3\left(\frac{v_0}{b}\right)\right] \qquad \textbf{Ans.}$$

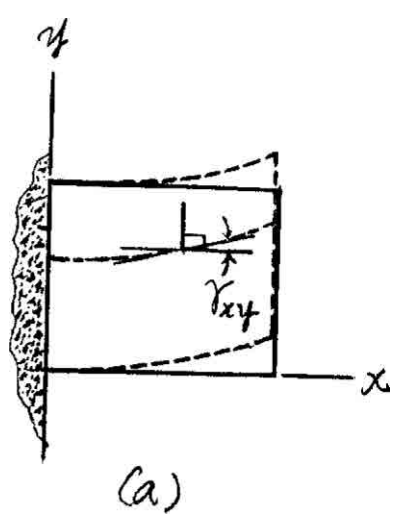

(a)

2–33. The fiber AB has a length L and orientation θ. If its ends A and B undergo very small displacements u_A and v_B, respectively, determine the normal strain in the fiber when it is in position $A'B'$.

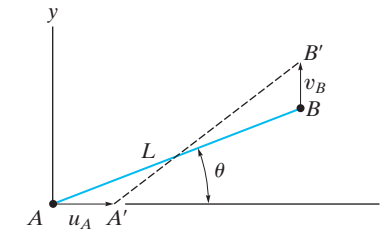

Geometry:

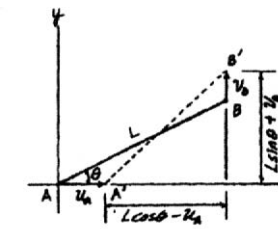

$$L_{A'B'} = \sqrt{(L\cos\theta - u_A)^2 + (L\sin\theta + v_B)^2}$$

$$= \sqrt{L^2 + u_A^2 + v_B^2 + 2L(v_B\sin\theta - u_A\cos\theta)}$$

Average Normal Strain:

$$\epsilon_{AB} = \frac{L_{A'B'} - L}{L}$$

$$= \sqrt{1 + \frac{u_A^2 + v^2{}_B}{L^2} + \frac{2(v_B\sin\theta - u_A\cos\theta)}{L}} - 1$$

Neglecting higher terms u_A^2 and v_B^2

$$\epsilon_{AB} = \left[1 + \frac{2(v_B\sin\theta - u_A\cos\theta)}{L}\right]^{\frac{1}{2}} - 1$$

Using the binomial theorem:

$$\epsilon_{AB} = 1 + \frac{1}{2}\left(\frac{2v_B\sin\theta}{L} - \frac{2u_A\cos\theta}{L}\right) + \ldots - 1$$

$$= \frac{v_B\sin\theta}{L} - \frac{u_A\cos\theta}{L}$$ **Ans.**

Ans.

$$\epsilon_{AB} = \frac{v_B\sin\theta}{L} - \frac{u_A\cos\theta}{L}$$

2–34. If the normal strain is defined in reference to the final length, that is,

$$\epsilon'_n = \lim_{p \to p'} \left(\frac{\Delta s' - \Delta s}{\Delta s'} \right)$$

instead of in reference to the original length, Eq. 2–2 , show that the difference in these strains is represented as a second-order term, namely, $\epsilon_n - \epsilon'_n = \epsilon_n \epsilon'_n$.

$$\epsilon_B = \frac{\Delta S' - \Delta S}{\Delta S}$$

$$\begin{aligned}
\epsilon_B - \epsilon'_A &= \frac{\Delta S' - \Delta S}{\Delta S} - \frac{\Delta S' - \Delta S}{\Delta S'} \\
&= \frac{\Delta S'^2 - \Delta S \Delta S' - \Delta S' \Delta S + \Delta S^2}{\Delta S \Delta S'} \\
&= \frac{\Delta S'^2 + \Delta S^2 - 2\Delta S' \Delta S}{\Delta S \Delta S'} \\
&= \frac{(\Delta S' - \Delta S)^2}{\Delta S \Delta S'} = \left(\frac{\Delta S' - \Delta S}{\Delta S} \right) \left(\frac{\Delta S' - \Delta S}{\Delta S'} \right) \\
&= \epsilon_A \epsilon'_B \text{ (Q.E.D)}
\end{aligned}$$

3–1. A tension test was performed on a steel specimen having an original diameter of 0.503 in. and gauge length of 2.00 in. The data is listed in the table. Plot the stress–strain diagram and determine approximately the modulus of elasticity, the yield stress, the ultimate stress, and the rupture stress. Use a scale of 1 in. = 20 ksi and 1 in. = 0.05 in./in. Redraw the elastic region, using the same stress scale but a strain scale of 1 in. = 0.001 in./in.

Load (kip)	Elongation (in.)
0	0
1.50	0.0005
4.60	0.0015
8.00	0.0025
11.00	0.0035
11.80	0.0050
11.80	0.0080
12.00	0.0200
16.60	0.0400
20.00	0.1000
21.50	0.2800
19.50	0.4000
18.50	0.4600

$$A = \frac{1}{4}\pi(0.503)^2 = 0.1987 \text{ in}^2$$

$L = 2.00$ in.

σ(ksi)	ε(in./in.)
0	0
7.55	0.00025
23.15	0.00075
40.26	0.00125
55.36	0.00175
59.38	0.0025
59.38	0.0040
60.39	0.010
83.54	0.020
100.65	0.050
108.20	0.140
98.13	0.200
93.10	0.230

$$E_{\text{approx}} = \frac{48}{0.0015} = 32.0(10^3) \text{ ksi}$$ **Ans.**

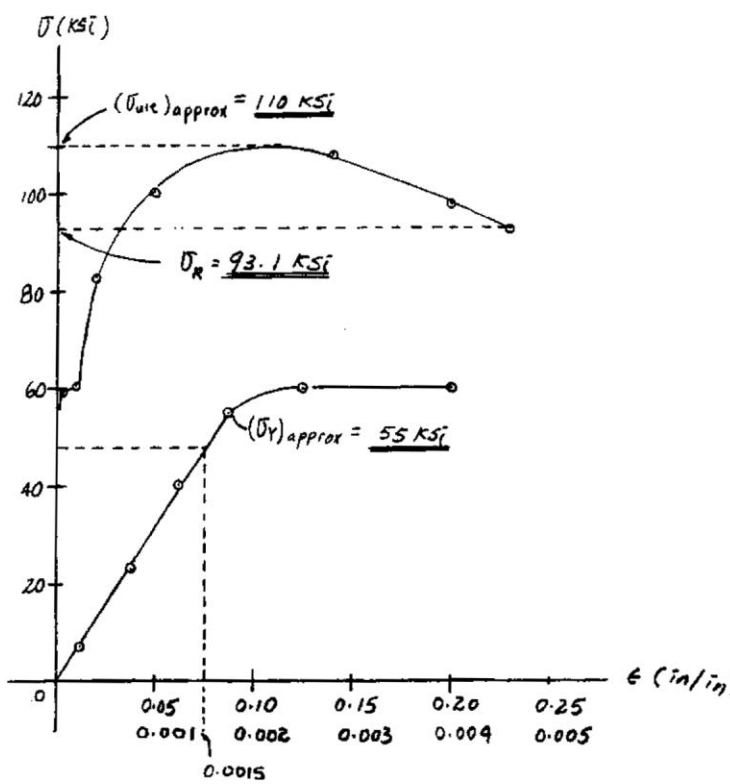

Ans:
$(\sigma_{\text{ult}})_{\text{approx}} = 110$ ksi, $(\sigma_R)_{\text{approx}} = 93.1$ ksi, $(\sigma_Y)_{\text{approx}} = 55$ ksi, $E_{\text{approx}} = 32.0(10^3)$ ksi

3–2. Data taken from a stress–strain test for a ceramic are given in the table. The curve is linear between the origin and the first point. Plot the diagram, and determine the modulus of elasticity and the modulus of resilience.

σ (ksi)	ϵ (in./in.)
0	0
33.2	0.0006
45.5	0.0010
49.4	0.0014
51.5	0.0018
53.4	0.0022

Modulus of Elasticity: From the stress–strain diagram

$$E = \frac{33.2 - 0}{0.0006 - 0} = 55.3\left(10^3\right) \text{ ksi}$$ **Ans.**

Modulus of Resilience: The modulus of resilience is equal to the area under the *linear portion* of the stress–strain diagram (shown shaded).

$$u_r = \frac{1}{2}(33.2)\left(10^3\right)\left(\frac{\text{lb}}{\text{in}^2}\right)\left(0.0006\,\frac{\text{in.}}{\text{in.}}\right) = 9.96\,\frac{\text{in}\cdot\text{lb}}{\text{in}^3}$$ **Ans.**

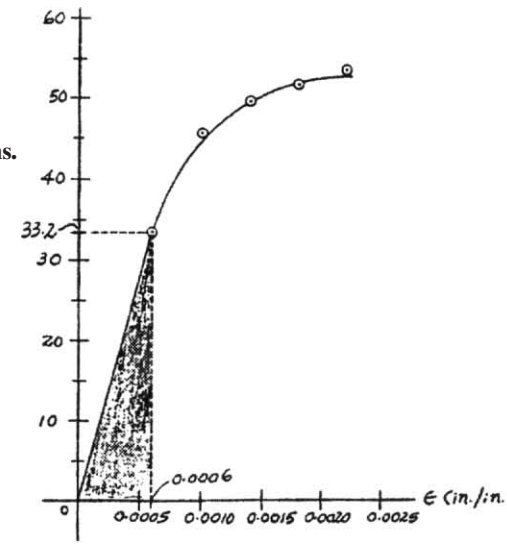

Ans:
$E = 55.3\left(10^3\right)$ ksi, $u_r = 9.96\,\frac{\text{in}\cdot\text{lb}}{\text{in}^3}$

3–3. Data taken from a stress–strain test for a ceramic are given in the table. The curve is linear between the origin and the first point. Plot the diagram, and determine approximately the modulus of toughness. The rupture stress is $\sigma_r = 53.4$ ksi.

σ (ksi)	ϵ (in./in.)
0	0
33.2	0.0006
45.5	0.0010
49.4	0.0014
51.5	0.0018
53.4	0.0022

Modulus of Toughness: The modulus of toughness is equal to the area under the stress-strain diagram (shown shaded).

$$
\begin{aligned}
(u_t)_{\text{approx}} &= \frac{1}{2}(33.2)\left(10^3\right)\left(\frac{\text{lb}}{\text{in}^2}\right)(0.0004 + 0.0010)\left(\frac{\text{in.}}{\text{in.}}\right) \\
&\quad + 45.5\left(10^3\right)\left(\frac{\text{lb}}{\text{in}^2}\right)(0.0012)\left(\frac{\text{in.}}{\text{in.}}\right) \\
&\quad + \frac{1}{2}(7.90)\left(10^3\right)\left(\frac{\text{lb}}{\text{in}^2}\right)(0.0012)\left(\frac{\text{in.}}{\text{in.}}\right) \\
&\quad + \frac{1}{2}(12.3)\left(10^3\right)\left(\frac{\text{lb}}{\text{in}^2}\right)(0.0004)\left(\frac{\text{in.}}{\text{in.}}\right) \\
&= 85.0\,\frac{\text{in}\cdot\text{lb}}{\text{in}^3} \qquad \textbf{Ans.}
\end{aligned}
$$

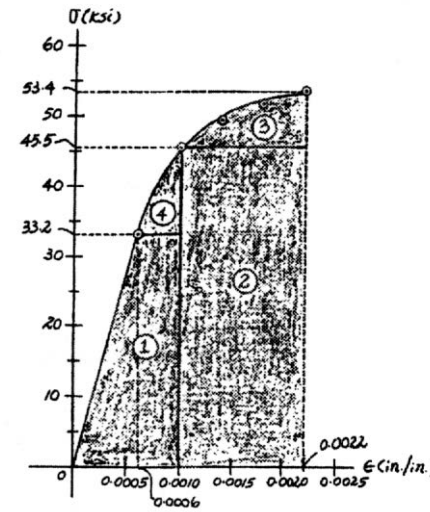

Ans:
$(u_t)_{\text{approx}} = 85.0\,\dfrac{\text{in}\cdot\text{lb}}{\text{in}^3}$

***3–4.** A tension test was performed on a steel specimen having an original diameter of 0.503 in. and a gauge length of 2.00 in. The data is listed in the table. Plot the stress–strain diagram and determine approximately the modulus of elasticity, the ultimate stress, and the rupture stress. Use a scale of 1 in. = 15 ksi and 1 in. = 0.05 in./in. Redraw the linear-elastic region, using the same stress scale but a strain scale of 1 in. = 0.001 in.

Load (kip)	Elongation (in.)
0	0
2.50	0.0009
6.50	0.0025
8.50	0.0040
9.20	0.0065
9.80	0.0098
12.0	0.0400
14.0	0.1200
14.5	0.2500
14.0	0.3500
13.2	0.4700

$$A = \frac{1}{4}\pi(0.503)^2 = 0.19871 \text{ in}^2$$

$$L = 2.00 \text{ in.}$$

$\sigma = \frac{P}{A}$(ksi)	$\epsilon = \frac{\Delta L}{L}$(in./in.)
0	0
12.58	0.00045
32.71	0.00125
42.78	0.0020
46.30	0.00325
49.32	0.0049
60.39	0.02
70.45	0.06
72.97	0.125
70.45	0.175
66.43	0.235

$$E_{\text{approx}} = \frac{32.71}{0.00125} = 26.2(10^3) \text{ ksi}$$ **Ans.**

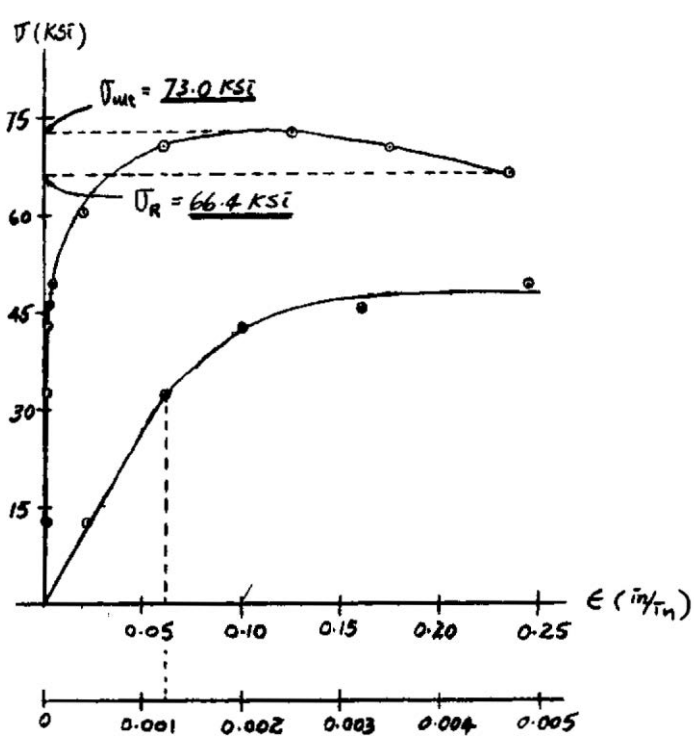

3–5. A tension test was performed on a steel specimen having an original diameter of 0.503 in. and gauge length of 2.00 in. Using the data listed in the table, plot the stress–strain diagram and determine approximately the modulus of toughness.

Load (kip)	Elongation (in.)
0	0
2.50	0.0009
6.50	0.0025
8.50	0.0040
9.20	0.0065
9.80	0.0098
12.0	0.0400
14.0	0.1200
14.5	0.2500
14.0	0.3500
13.2	0.4700

Modulus of toughness (approx)

u_t = total area under the curve

$$= 87\ (7.5)\ (0.025) \qquad (1)$$

$$= 16.3\ \frac{\text{in.} \cdot \text{kip}}{\text{in}^3} \qquad \textbf{Ans.}$$

In Eq.(1), 87 is the number of squares under the curve.

$\sigma = \frac{P}{A}$(ksi)	$\epsilon = \frac{\Delta L}{L}$(in./in.)
0	0
12.58	0.00045
32.71	0.00125
42.78	0.0020
46.30	0.00325
49.32	0.0049
60.39	0.02
70.45	0.06
72.97	0.125
70.45	0.175
66.43	0.235

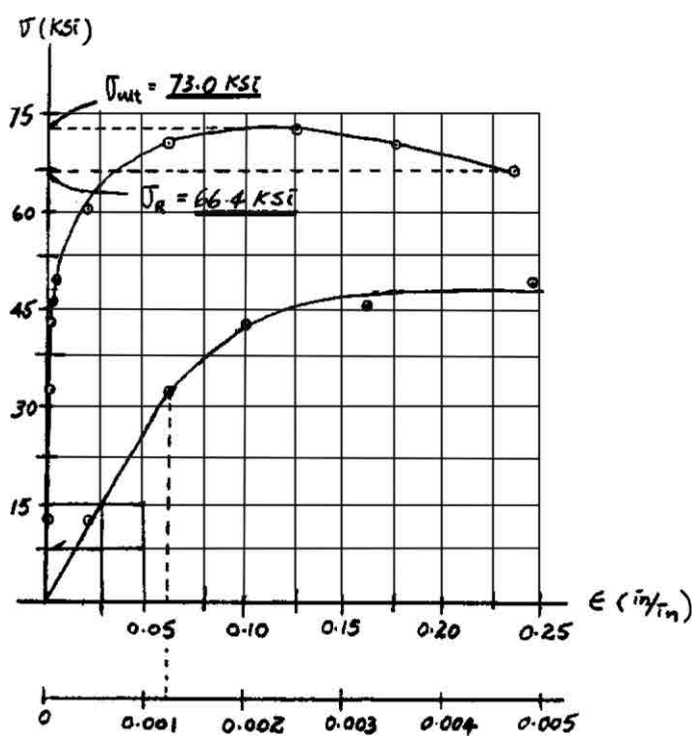

Ans:
$u_t = 16.3\ \frac{\text{in.} \cdot \text{kip}}{\text{in}^3}$

3–6. A specimen is originally 1 ft long, has a diameter of 0.5 in., and is subjected to a force of 500 lb. When the force is increased from 500 lb to 1800 lb, the specimen elongates 0.009 in. Determine the modulus of elasticity for the material if it remains linear elastic.

Normal Stress and Strain: Applying $\sigma = \dfrac{P}{A}$ and $\varepsilon = \dfrac{\delta L}{L}$.

$$\sigma_1 = \frac{0.500}{\frac{\pi}{4}(0.5^2)} = 2.546 \text{ ksi}$$

$$\sigma_2 = \frac{1.80}{\frac{\pi}{4}(0.5^2)} = 9.167 \text{ ksi}$$

$$\Delta\epsilon = \frac{0.009}{12} = 0.000750 \text{ in./in.}$$

Modulus of Elasticity:

$$E = \frac{\Delta\sigma}{\Delta\epsilon} = \frac{9.167 - 2.546}{0.000750} = 8.83\left(10^3\right) \text{ ksi}$$ **Ans.**

Ans:
$E = 8.83\left(10^3\right)$ ksi

3–7. A structural member in a nuclear reactor is made of a zirconium alloy. If an axial load of 4 kip is to be supported by the member, determine its required cross-sectional area. Use a factor of safety of 3 relative to yielding. What is the load on the member if it is 3 ft long and its elongation is 0.02 in.? $E_{zr} = 14(10^3)$ ksi, $\sigma_Y = 57.5$ ksi. The material has elastic behavior.

Allowable Normal Stress:

$$\text{F.S.} = \frac{\sigma_y}{\sigma_{\text{allow}}}$$

$$3 = \frac{57.5}{\sigma_{\text{allow}}}$$

$$\sigma_{\text{allow}} = 19.17 \text{ ksi}$$

$$\sigma_{\text{allow}} = \frac{P}{A}$$

$$19.17 = \frac{4}{A}$$

$$A = 0.2087 \text{ in}^2 = 0.209 \text{ in}^2 \qquad \textbf{Ans.}$$

Stress–Strain Relationship: Applying Hooke's law with

$$\epsilon = \frac{\delta}{L} = \frac{0.02}{3\,(12)} = 0.000555 \text{ in./in.}$$

$$\sigma = E\epsilon = 14\left(10^3\right)(0.000555) = 7.778 \text{ ksi}$$

Normal Force: Applying equation $\sigma = \dfrac{P}{A}$.

$$P = \sigma A = 7.778\,(0.2087) = 1.62 \text{ kip} \qquad \textbf{Ans.}$$

Ans:
$A = 0.209 \text{ in}^2$, $P = 1.62$ kip

***3–8.** The strut is supported by a pin at C and an A-36 steel guy wire AB. If the wire has a diameter of 0.2 in., determine how much it stretches when the distributed load acts on the strut.

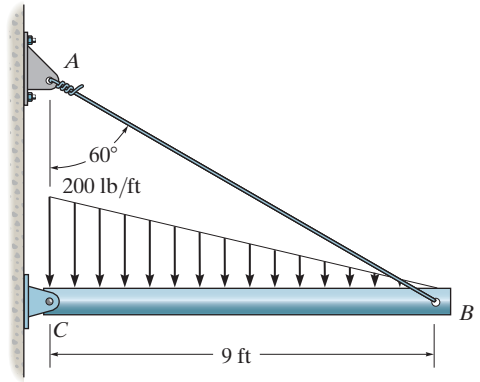

Here, we are only interested in determining the force in wire AB.

$$\circlearrowleft + \Sigma M_C = 0; \qquad F_{AB}\cos 60°(9) - \frac{1}{2}(200)(9)(3) = 0 \qquad F_{AB} = 600 \text{ lb}$$

The normal stress the wire is

$$\sigma_{AB} = \frac{F_{AB}}{A_{AB}} = \frac{600}{\frac{\pi}{4}(0.2^2)} = 19.10(10^3) \text{ psi} = 19.10 \text{ ksi}$$

Since $\sigma_{AB} < \sigma_y = 36$ ksi, Hooke's Law can be applied to determine the strain in wire.

$$\sigma_{AB} = E\epsilon_{AB}; \qquad 19.10 = 29.0(10^3)\epsilon_{AB}$$

$$\epsilon_{AB} = 0.6586(10^{-3}) \text{ in/in}$$

The unstretched length of the wire is $L_{AB} = \dfrac{9(12)}{\sin 60°} = 124.71$ in. Thus, the wire stretches

$$\delta_{AB} = \epsilon_{AB} L_{AB} = 0.6586(10^{-3})(124.71)$$

$$= 0.0821 \text{ in.} \qquad \textbf{Ans.}$$

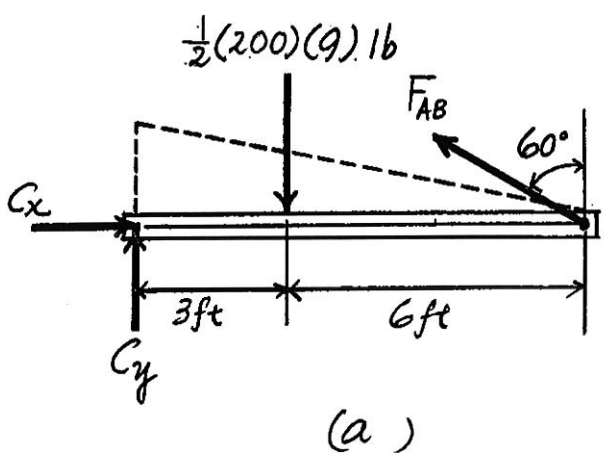

3–9. The $\sigma-\epsilon$ diagram for elastic fibers that make up human skin and muscle is shown. Determine the modulus of elasticity of the fibers and estimate their modulus of toughness and modulus of resilience.

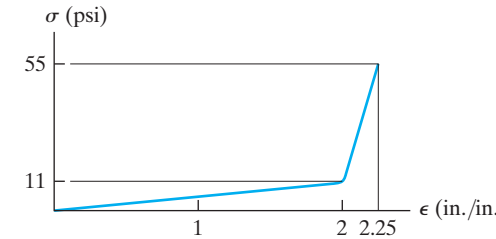

$$E = \frac{11}{2} = 5.5 \text{ psi}$$ **Ans.**

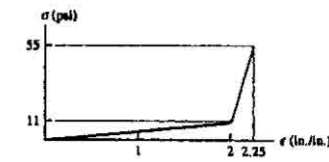

$$u_t = \frac{1}{2}(2)(11) + \frac{1}{2}(55 + 11)(2.25 - 2) = 19.25 \text{ psi}$$ **Ans.**

$$u_r = \frac{1}{2}(2)(11) = 11 \text{ psi}$$ **Ans.**

Ans:
$E = 5.5$ psi, $u_t = 19.25$ psi, $u_r = 11$ psi

3–10. The stress–strain diagram for a metal alloy having an original diameter of 0.5 in. and a gauge length of 2 in. is given in the figure. Determine approximately the modulus of elasticity for the material, the load on the specimen that causes yielding, and the ultimate load the specimen will support.

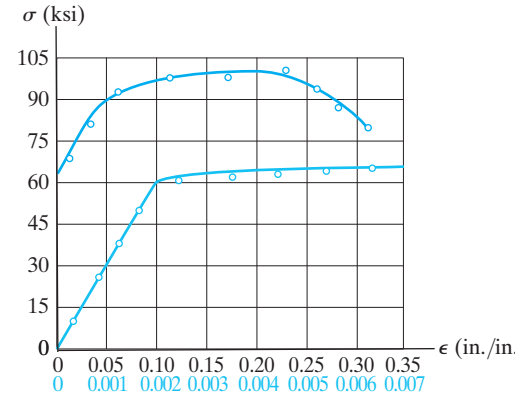

From the stress–strain diagram, Fig. *a*,

$$\frac{E}{1} = \frac{60 \text{ ksi} - 0}{0.002 - 0}; \qquad E = 30.0(10^3) \text{ ksi} \qquad \textbf{Ans.}$$

$$\sigma_y = 60 \text{ ksi} \qquad \sigma_{\text{ult}} = 100 \text{ ksi}$$

Thus,

$$P_Y = \sigma_Y A = 60\left[\tfrac{\pi}{4}(0.5^2)\right] = 11.78 \text{ kip} = 11.8 \text{ kip} \qquad \textbf{Ans.}$$

$$P_{\text{ult}} = \sigma_{\text{ult}} A = 100\left[\tfrac{\pi}{4}(0.5^2)\right] = 19.63 \text{ kip} = 19.6 \text{ kip} \qquad \textbf{Ans.}$$

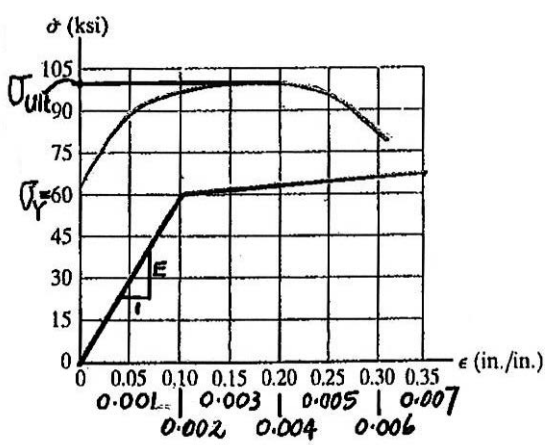

(a)

Ans:
$E = 30.0(10^3)$ ksi, $P_Y = 11.8$ kip, $P_{\text{ult}} = 19.6$ kip

3–11. The stress–strain diagram for a steel alloy having an original diameter of 0.5 in. and a gauge length of 2 in. is given in the figure. If the specimen is loaded until it is stressed to 90 ksi, determine the approximate amount of elastic recovery and the increase in the gauge length after it is unloaded.

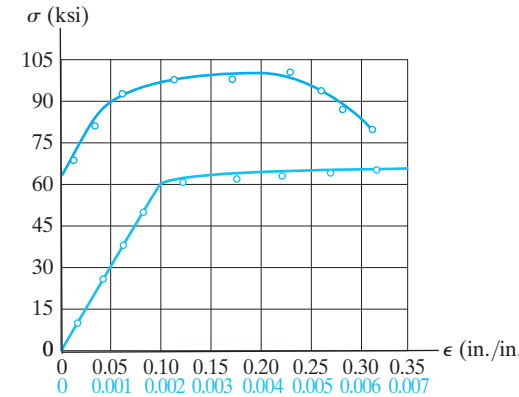

From the stress–strain diagram Fig. *a*, the modulus of elasticity for the steel alloy is

$$\frac{E}{1} = \frac{60 \text{ ksi} - 0}{0.002 - 0}; \qquad E = 30.0(10^3) \text{ ksi}$$

when the specimen is unloaded, its normal strain recovers along line *AB*, Fig. *a*, which has a slope of *E*. Thus

$$\textit{Elastic Recovery} = \frac{90}{E} = \frac{90 \text{ ksi}}{30.0(10^3) \text{ ksi}} = 0.003 \text{ in/in.} \qquad \textbf{Ans.}$$

Thus, the permanent set is

$$\epsilon_P = 0.05 - 0.003 = 0.047 \text{ in/in.}$$

Then, the increase in gauge length is

$$\Delta L = \epsilon_P L = 0.047(2) = 0.094 \text{ in.} \qquad \textbf{Ans.}$$

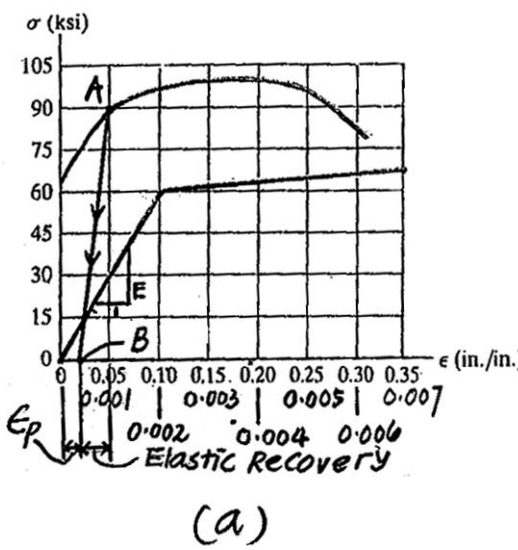

(a)

Ans:
Elastic Recovery = 0.003 in./in., ΔL = 0.094 in.

***3–12.** The stress–strain diagram for a steel alloy having an original diameter of 0.5 in. and a gauge length of 2 in. is given in the figure. Determine approximately the modulus of resilience and the modulus of toughness for the material.

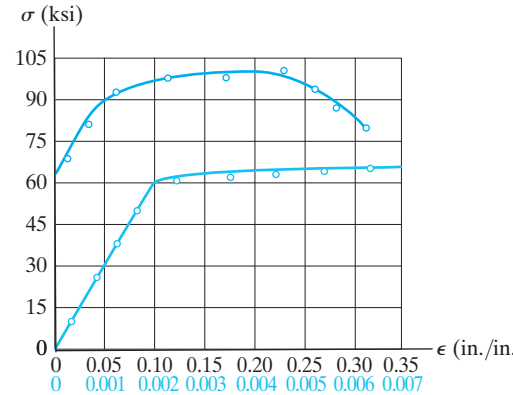

The Modulus of resilience is equal to the area under the stress–strain diagram up to the proportional limit.

$$\sigma_{PL} = 60 \text{ ksi} \qquad \epsilon_{PL} = 0.002 \text{ in./in.}$$

Thus,

$$(u_i)_r = \frac{1}{2}\sigma_{PL}\epsilon_{PL} = \frac{1}{2}\left[60(10^3)\right](0.002) = 60.0\ \frac{\text{in.}\cdot\text{lb}}{\text{in}^3} \qquad \textbf{Ans.}$$

The modulus of toughness is equal to the area under the entire stress–strain diagram. This area can be approximated by counting the number of squares. The total number is 38. Thus,

$$\left[(u_i)_t\right]_{\text{approx}} = 38\left[15(10^3)\ \frac{\text{lb}}{\text{in}^2}\right]\left(0.05\ \frac{\text{in.}}{\text{in.}}\right) = 28.5(10^3)\ \frac{\text{in.}\cdot\text{lb}}{\text{in}^3} \qquad \textbf{Ans.}$$

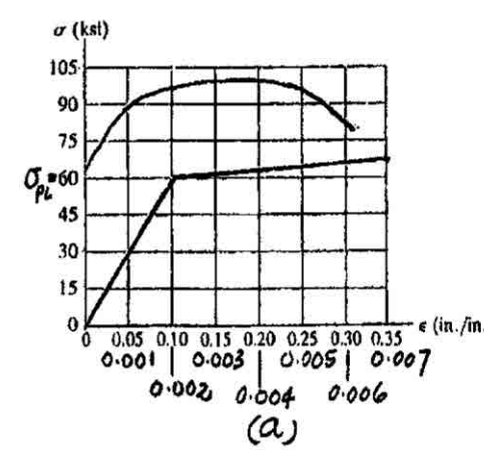

3–13. A bar having a length of 5 in. and cross-sectional area of 0.7 in.^{2} is subjected to an axial force of 8000 lb. If the bar stretches 0.002 in., determine the modulus of elasticity of the material. The material has linear-elastic behavior.

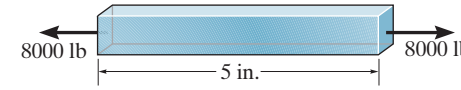

Normal Stress and Strain:

$$\sigma = \frac{P}{A} = \frac{8.00}{0.7} = 11.43 \text{ ksi}$$

$$\epsilon = \frac{\delta}{L} = \frac{0.002}{5} = 0.000400 \text{ in./in.}$$

Modulus of Elasticity:

$$E = \frac{\sigma}{\epsilon} = \frac{11.43}{0.000400} = 28.6(10^3) \text{ ksi} \qquad \textbf{Ans.}$$

Ans:
$E = 28.6(10^3)$ ksi

3–14. The rigid pipe is supported by a pin at A and an A-36 steel guy wire BD. If the wire has a diameter of 0.25 in., determine how much it stretches when a load of $P = 600$ lb acts on the pipe.

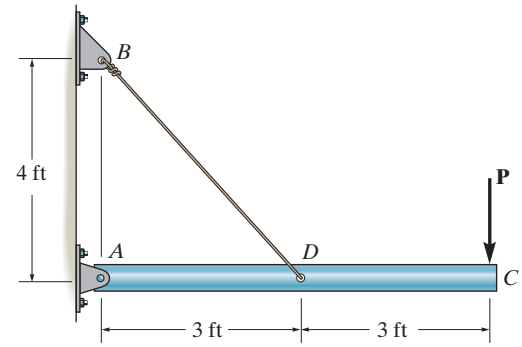

Here, we are only interested in determining the force in wire BD. Referring to the FBD in Fig. *a*

$$\circlearrowleft + \Sigma M_A = 0; \qquad F_{BD}\left(\tfrac{4}{5}\right)(3) - 600(6) = 0 \qquad F_{BD} = 1500 \text{ lb}$$

The normal stress developed in the wire is

$$\sigma_{BD} = \frac{F_{BD}}{A_{BD}} = \frac{1500}{\frac{\pi}{4}(0.25^2)} = 30.56(10^3) \text{ psi} = 30.56 \text{ ksi}$$

Since $\sigma_{BD} < \sigma_y = 36$ ksi, Hooke's Law can be applied to determine the strain in the wire.

$$\sigma_{BD} = E\epsilon_{BD}; \qquad 30.56 = 29.0(10^3)\epsilon_{BD}$$

$$\epsilon_{BD} = 1.054(10^{-3}) \text{ in./in.}$$

The unstretched length of the wire is $L_{BD} = \sqrt{3^2 + 4^2} = 5$ ft $= 60$ in. Thus, the wire stretches

$$\delta_{BD} = \epsilon_{BD} L_{BD} = 1.054(10^{-3})(60)$$

$$= 0.0632 \text{ in.} \qquad \textbf{Ans.}$$

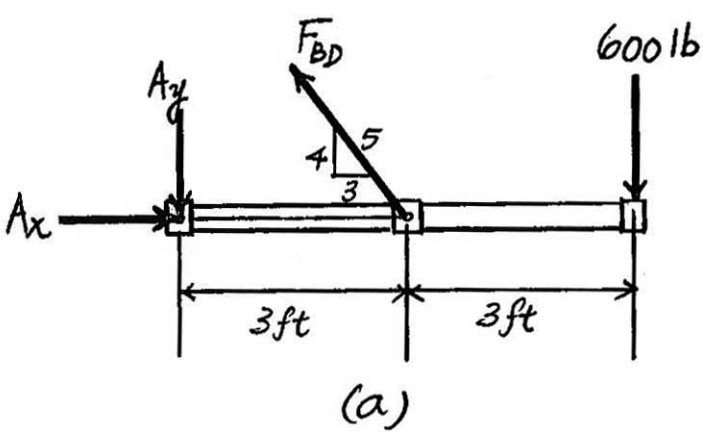

Ans:
$\delta_{BD} = 0.0632$ in.

3–15. The rigid pipe is supported by a pin at A and an A-36 guy wire BD. If the wire has a diameter of 0.25 in., determine the load P if the end C is displaced 0.15 in. downward.

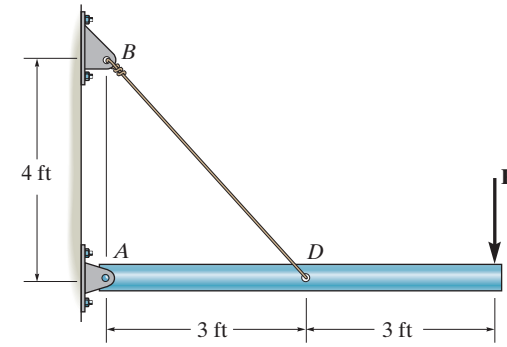

Here, we are only interested in determining the force in wire BD. Referring to the FBD in Fig. a

$$\circlearrowleft + \Sigma M_A = 0; \qquad F_{BD}\left(\tfrac{4}{5}\right)(3) - P(6) = 0 \qquad F_{BD} = 2.50\,P$$

The unstretched length for wire BD is $L_{BD} = \sqrt{3^2 + 4^2} = 5\text{ ft} = 60\text{ in}$. From the geometry shown in Fig. b, the stretched length of wire BD is

$$L_{BD'} = \sqrt{60^2 + 0.075^2 - 2(60)(0.075)\cos 143.13^\circ} = 60.060017$$

Thus, the normal strain is

$$\epsilon_{BD} = \frac{L_{BD'} - L_{BD}}{L_{BD}} = \frac{60.060017 - 60}{60} = 1.0003(10^{-3})\text{ in./in.}$$

Then, the normal stress can be obtain by applying Hooke's Law.

$$\sigma_{BD} = E\epsilon_{BD} = 29(10^3)\left[1.0003(10^{-3})\right] = 29.01\text{ ksi}$$

Since $\sigma_{BD} < \sigma_y = 36$ ksi, the result is valid.

$$\sigma_{BD} = \frac{F_{BD}}{A_{BD}}; \qquad 29.01(10^3) = \frac{2.50\,P}{\frac{\pi}{4}(0.25^2)}$$

$$P = 569.57\text{ lb} = 570\text{ lb} \qquad \textbf{Ans.}$$

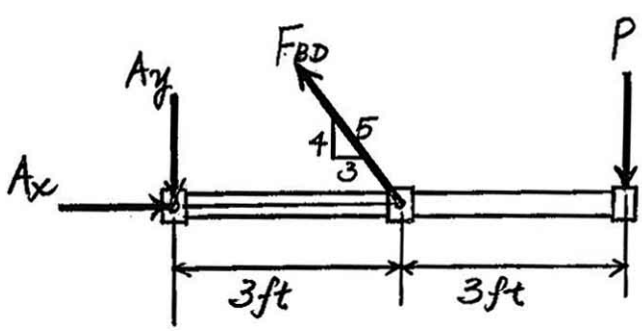

(a)

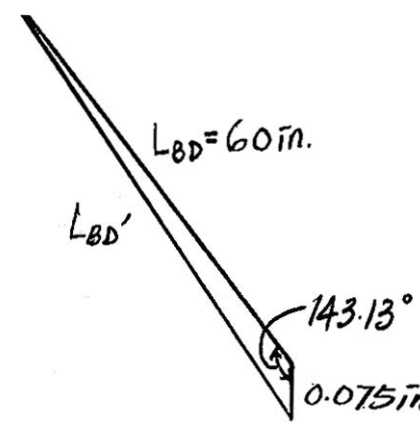

(b)

Ans:
$P = 570$ lb

***3–16.** The wire has a diameter of 5 mm and is made from A-36 steel. If a 80-kg man is sitting on seat C, determine the elongation of wire DE.

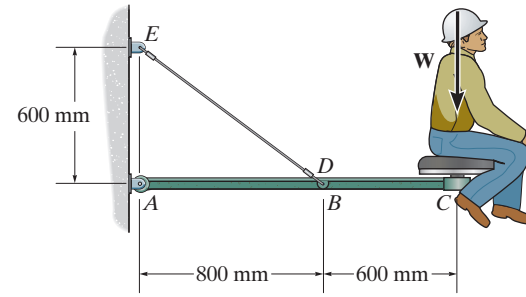

Equations of Equilibrium: The force developed in wire DE can be determined by writing the moment equation of equilibrium about A with reference to the free-body diagram shown in Fig. a,

$$\circlearrowleft + \Sigma M_A = 0; \qquad F_{DE}\left(\frac{3}{5}\right)(0.8) - 80(9.81)(1.4) = 0$$

$$F_{DE} = 2289 \text{ N}$$

Normal Stress and Strain:

$$\sigma_{DE} = \frac{F_{DE}}{A_{DE}} = \frac{2289}{\frac{\pi}{4}(0.005^2)} = 116.58 \text{ MPa}$$

Since $\sigma_{DE} < \sigma_Y$, Hooke's Law can be applied

$$\sigma_{DE} = E\epsilon_{DE}$$

$$116.58(10^6) = 200(10^9)\epsilon_{DE}$$

$$\epsilon_{DE} = 0.5829(10^{-3}) \text{ mm/mm}$$

The unstretched length of wire DE is $L_{DE} = \sqrt{600^2 + 800^2} = 1000$ mm. Thus, the elongation of this wire is given by

$$\delta_{DE} = \epsilon_{DE}L_{DE} = 0.5829(10^{-3})(1000) = 0.583 \text{ mm} \qquad \textbf{Ans.}$$

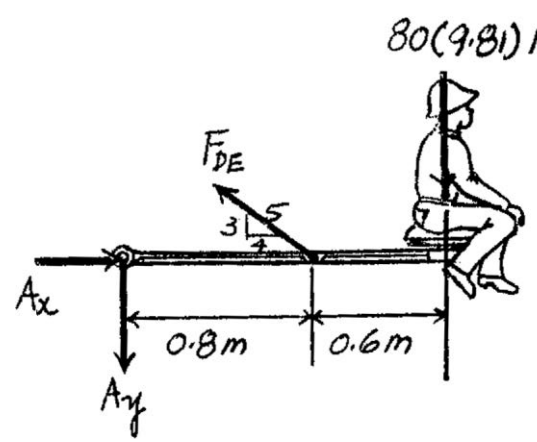

3–17. A tension test was performed on a magnesium alloy specimen having a diameter 0.5 in. and gauge length 2 in. The resulting stress–strain diagram is shown in the figure. Determine the approximate modulus of elasticity and the yield strength of the alloy using the 0.2% strain offset method.

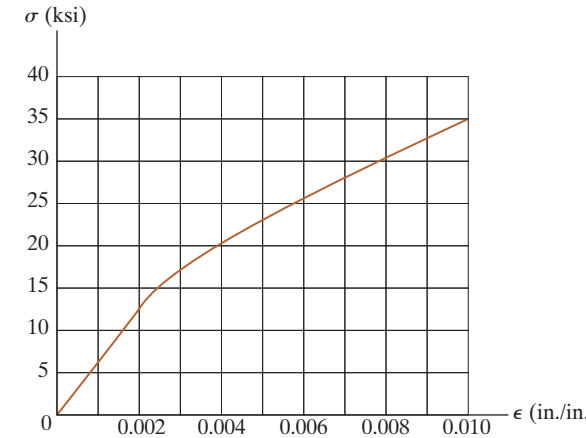

Modulus of Elasticity: From the stress–strain diagram, when $\epsilon = 0.002$ in./in., its corresponding stress is $\sigma = 13.0$ ksi. Thus,

$$E_{\text{approx}} = \frac{13.0 - 0}{0.002 - 0} = 6.50(10^3) \text{ ksi} \qquad \textbf{Ans.}$$

Yield Strength: The intersection point between the stress–strain diagram and the straight line drawn parallel to the initial straight portion of the stress–strain diagram from the offset strain of $\epsilon = 0.002$ in./in. is the yield strength of the alloy. From the stress–strain diagram,

$$\sigma_{YS} = 25.9 \text{ ksi} \qquad \textbf{Ans.}$$

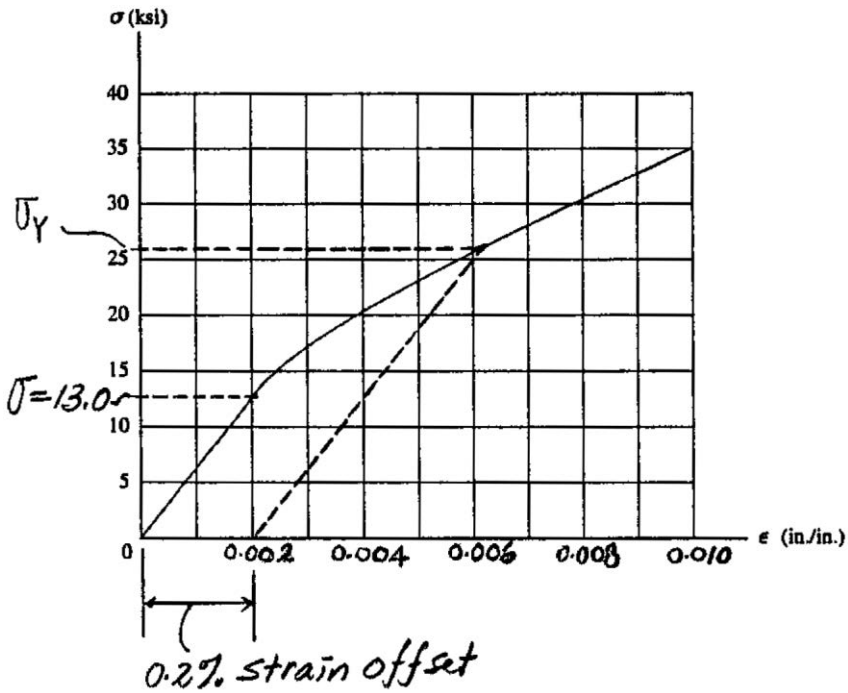

Ans:
$E_{\text{approx}} = 6.50(10^3)$ ksi, $\sigma_{YS} = 25.9$ ksi

3–18. A tension test was performed on a magnesium alloy specimen having a diameter 0.5 in. and gauge length of 2 in. The resulting stress–strain diagram is shown in the figure. If the specimen is stressed to 30 ksi and unloaded, determine the permanent elongation of the specimen.

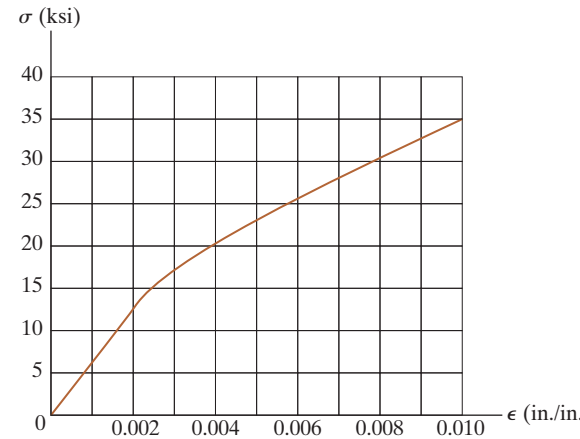

Permanent Elongation: From the stress–strain diagram, the strain recovered is along the straight line BC which is parallel to the straight line OA. Since $E_{\text{approx}} = \dfrac{13.0 - 0}{0.002 - 0} = 6.50(10^3)$ ksi, then the permanent set for the specimen is

$$\epsilon_P = 0.0078 - \frac{30(10^3)}{6.5(10^6)} = 0.00318 \text{ in./in.}$$

Thus,

$$\delta_P = \epsilon_P L = 0.00318(2) = 0.00637 \text{ in.} \qquad \textbf{Ans.}$$

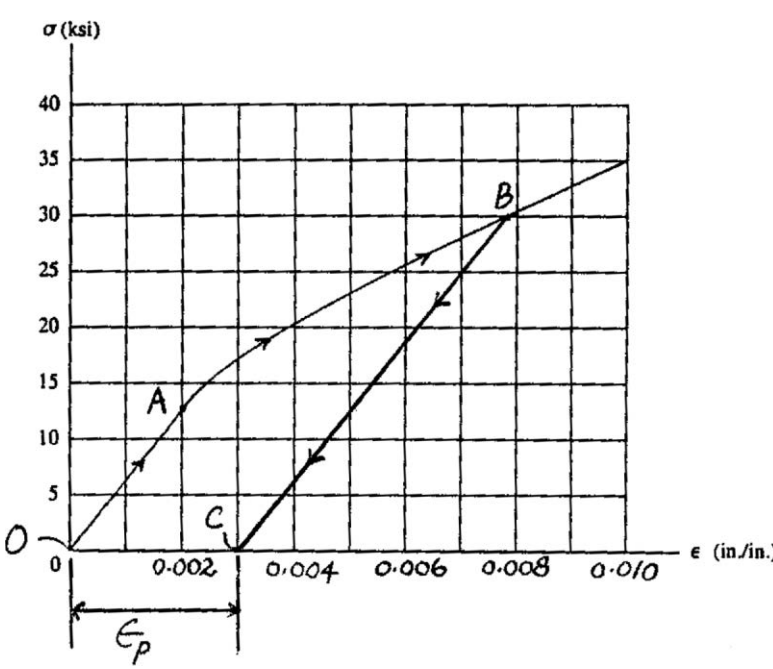

Ans:
$\delta_P = 0.00637$ in.

3–19. The stress–strain diagram for a bone is shown, and can be described by the equation $\epsilon = 0.45(10^{-6})\,\sigma + 0.36(10^{-12})\,\sigma^3$, where σ is in kPa. Determine the yield strength assuming a 0.3% offset.

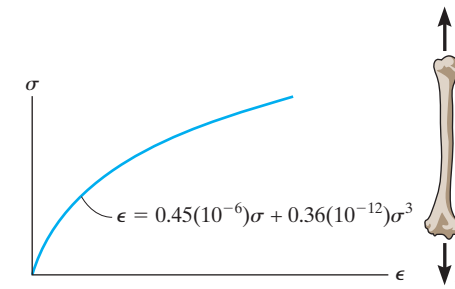

$$\epsilon = 0.45(10^{-6})\sigma + 0.36(10^{-12})\sigma^3,$$

$$d\epsilon = \left(0.45(10^{-6}) + 1.08(10^{-12})\,\sigma^2\right)d\sigma$$

$$E = \left.\frac{d\sigma}{d\epsilon}\right|_{\sigma=0} = \frac{1}{0.45(10^{-6})} = 2.22(10^6)\text{ kPa} = 2.22\text{ GPa}$$

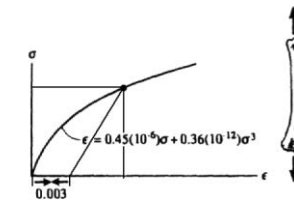

The equation for the recovery line is $\sigma = 2.22(10^6)(\epsilon - 0.003)$.

This line intersects the stress–strain curve at $\sigma_{YS} = 2027\text{ kPa} = 2.03\text{ MPa}$ **Ans.**

Ans:
$\sigma_{YS} = 2.03\text{ MPa}$

***3–20.** The stress–strain diagram for a bone is shown and can be described by the equation $\epsilon = 0.45(10^{-6})\,\sigma + 0.36(10^{-12})\,\sigma^3$, where σ is in kPa. Determine the modulus of toughness and the amount of elongation of a 200-mm-long region just before it fractures if failure occurs at $\epsilon = 0.12$ mm/mm.

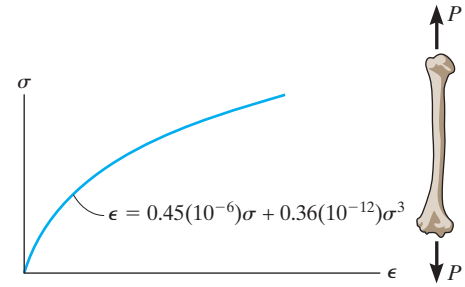

When $\epsilon = 0.12$

$$120(10^{-3}) = 0.45\,\sigma + 0.36(10^{-6})\sigma^3$$

Solving for the real root:

$$\sigma = 6873.52 \text{ kPa}$$

$$u_t = \int_A dA = \int_0^{6873.52} (0.12 - \epsilon)\,d\sigma$$

$$u_t = \int_0^{6873.52} (0.12 - 0.45(10^{-6})\sigma - 0.36(10^{-12})\sigma^3)\,d\sigma$$

$$= 0.12\,\sigma - 0.225(10^{-6})\sigma^2 - 0.09(10^{-12})\sigma^4\Big|_0^{6873.52}$$

$$= 613 \text{ kJ/m}^3 \qquad \textbf{Ans.}$$

$$\delta = \epsilon L = 0.12(200) = 24 \text{ mm} \qquad \textbf{Ans.}$$

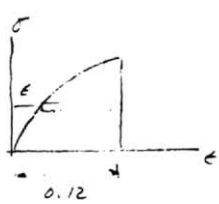

3–21. The two bars are made of polystyrene, which has the stress–strain diagram shown. If the cross-sectional area of bar AB is 1.5 in^2 and BC is 4 in^2, determine the largest force P that can be supported before any member ruptures. Assume that buckling does not occur.

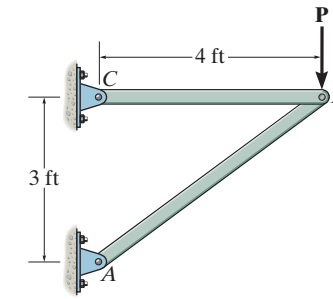

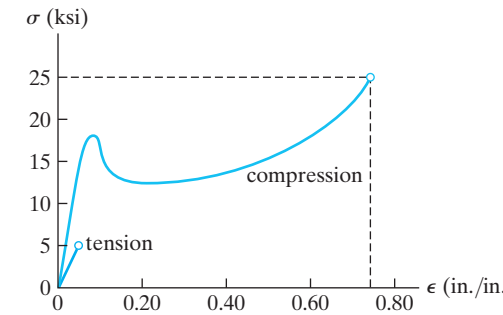

$$+\uparrow \Sigma F_y = 0; \qquad \frac{3}{5}F_{AB} - P = 0; \qquad F_{AB} = 1.6667\,P \qquad (1)$$

$$\overset{+}{\leftarrow} \Sigma F_x = 0; \qquad F_{BC} - \frac{4}{5}(1.6667P) = 0; \qquad F_{BC} = 1.333\,P \qquad (2)$$

Assuming failure of bar BC:

From the stress–strain diagram $(\sigma_R)_t = 5$ ksi

$$\sigma = \frac{F_{BC}}{A_{BC}}; \qquad 5 = \frac{F_{BC}}{4}; \qquad F_{BC} = 20.0 \text{ kip}$$

From Eq. (2), $P = 15.0$ kip

Assuming failure of bar AB:

From stress–strain diagram $(\sigma_R)_c = 25.0$ ksi

$$\sigma = \frac{F_{AB}}{A_{AB}}; \qquad 25.0 = \frac{F_{AB}}{1.5}; \qquad F_{AB} = 37.5 \text{ kip}$$

From Eq. (1), $P = 22.5$ kip

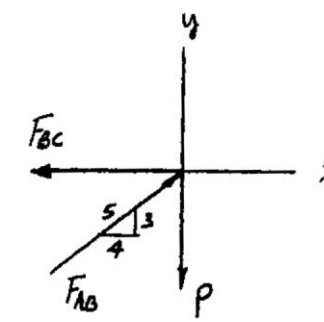

Choose the smallest value

$$P = 15.0 \text{ kip} \qquad \textbf{Ans.}$$

Ans:
$P = 15.0$ kip

3–22. The two bars are made of polystyrene, which has the stress–strain diagram shown. Determine the cross-sectional area of each bar so that the bars rupture simultaneously when the load $P = 3$ kip. Assume that buckling does not occur.

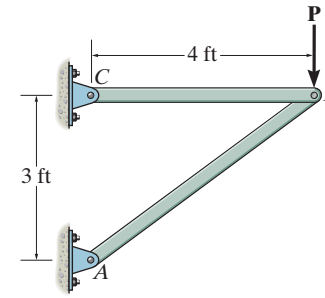

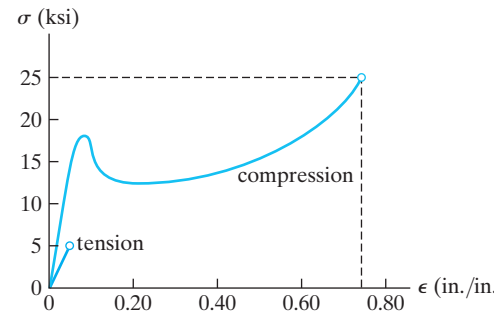

$$+\uparrow \Sigma F_y = 0; \qquad F_{BA}\left(\frac{3}{5}\right) - 3 = 0; \qquad F_{BA} = 5 \text{ kip}$$

$$\overset{+}{\rightarrow} \Sigma F_x = 0; \qquad -F_{BC} + 5\left(\frac{4}{5}\right) = 0; \qquad F_{BC} = 4 \text{ kip}$$

For member BC:

$$(\sigma_{\max})_t = \frac{F_{BC}}{A_{BC}}; \quad A_{BC} = \frac{4 \text{ kip}}{5 \text{ ksi}} = 0.8 \text{ in}^2 \qquad \textbf{Ans.}$$

For member BA:

$$(\sigma_{\max})_c = \frac{F_{BA}}{A_{BA}}; \quad A_{BA} = \frac{5 \text{ kip}}{25 \text{ ksi}} = 0.2 \text{ in}^2 \qquad \textbf{Ans.}$$

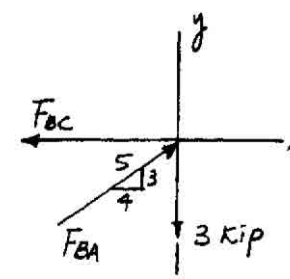

Ans:
$A_{BC} = 0.8 \text{ in}^2$, $A_{BA} = 0.2 \text{ in}^2$

3–23. The stress–strain diagram for many metal alloys can be described analytically using the Ramberg-Osgood three parameter equation $\epsilon = \sigma/E + k\sigma^n$, where E, k, and n are determined from measurements taken from the diagram. Using the stress–strain diagram shown in the figure, take $E = 30(10^3)$ ksi and determine the other two parameters k and n and thereby obtain an analytical expression for the curve.

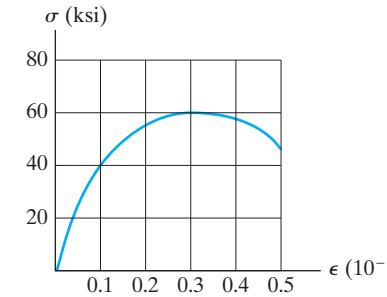

Choose,

$$\sigma = 40 \text{ ksi}, \varepsilon = 0.1$$

$$\sigma = 60 \text{ ksi}, \varepsilon = 0.3$$

$$0.1 = \frac{40}{30(10^3)} + k(40)^n$$

$$0.3 = \frac{60}{30(10^3)} + k(60)^n$$

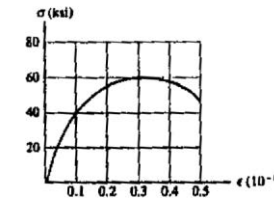

$$0.098667 = k(40)^n$$

$$0.29800 = k(60)^n$$

$$0.3310962 = (0.6667)^n$$

$$\ln(0.3310962) = n \ln(0.6667)$$

$$n = 2.73 \qquad \textbf{Ans.}$$

$$k = 4.23(10^{-6}) \qquad \textbf{Ans.}$$

Ans:
$n = 2.73$, $k = 4.23(10^{-6})$

3–24. The wires AB and BC have original lengths of 2 ft and 3 ft, and diameters of $\frac{1}{8}$ in. and $\frac{3}{16}$ in., respectively. If these wires are made of a material that has the approximate stress–strain diagram shown, determine the elongations of the wires after the 1500-lb load is placed on the platform.

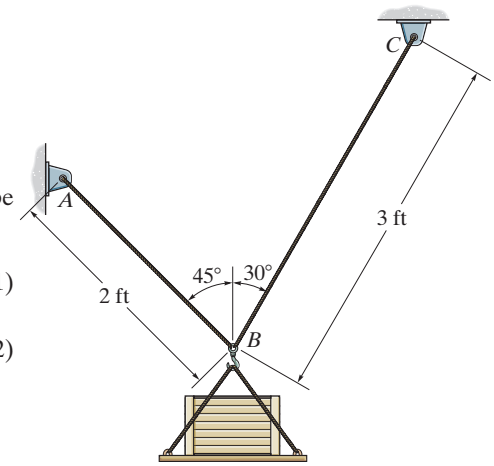

Equations of Equilibrium: The forces developed in wires AB and BC can be determined by analyzing the equilibrium of joint B, Fig. a,

$$\overset{+}{\rightarrow}\Sigma F_x = 0; \qquad F_{BC}\sin 30° - F_{AB}\sin 45° = 0 \qquad (1)$$

$$+\uparrow \Sigma F_y = 0; \qquad F_{BC}\cos 30° + F_{AB}\cos 45° = 1500 \qquad (2)$$

Solving Eqs. (1) and (2),

$$F_{AB} = 776.46 \text{ lb} \qquad F_{BC} = 1098.08 \text{ lb}$$

Normal Stress and Strain:

$$\sigma_{AB} = \frac{F_{AB}}{A_{AB}} = \frac{776.46}{\frac{\pi}{4}(1/8)^2} = 63.27 \text{ ksi}$$

$$\sigma_{BC} = \frac{F_{BC}}{A_{BC}} = \frac{1098.08}{\frac{\pi}{4}(3/16)^2} = 39.77 \text{ ksi}$$

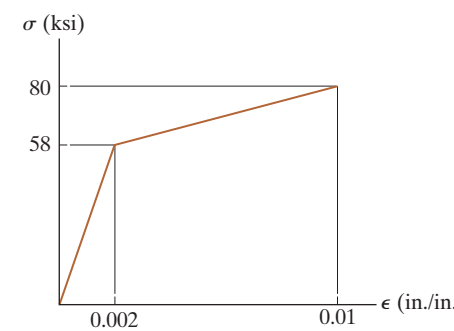

The corresponding normal strain can be determined from the stress–strain diagram, Fig. b.

$$\frac{39.77}{\epsilon_{BC}} = \frac{58}{0.002}; \qquad \epsilon_{BC} = 0.001371 \text{ in./in.}$$

$$\frac{63.27 - 58}{\epsilon_{AB} - 0.002} = \frac{80 - 58}{0.01 - 0.002}; \qquad \epsilon_{AB} = 0.003917 \text{ in./in.}$$

Thus, the elongations of wires AB and BC are

$$\delta_{AB} = \epsilon_{AB}L_{AB} = 0.003917(24) = 0.0940 \qquad \textbf{Ans.}$$

$$\delta_{BC} = \epsilon_{BC}L_{BC} = 0.001371(36) = 0.0494 \qquad \textbf{Ans.}$$

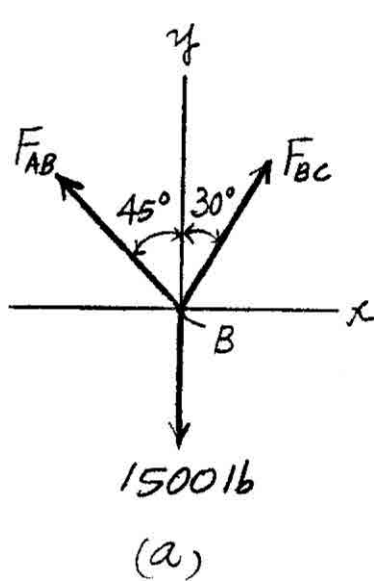

(a)

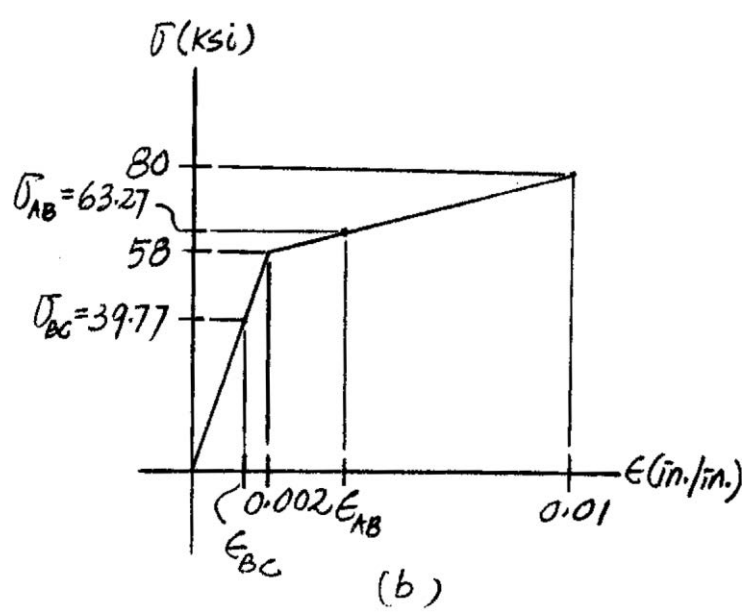

(b)

3–25. The acrylic plastic rod is 200 mm long and 15 mm in diameter. If an axial load of 300 N is applied to it, determine the change in its length and the change in its diameter. $E_p = 2.70$ GPa, $\nu_p = 0.4$.

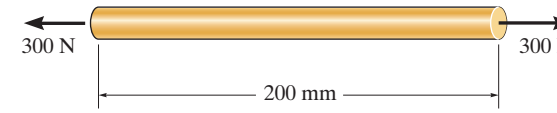

$$\sigma = \frac{P}{A} = \frac{300}{\frac{\pi}{4}(0.015)^2} = 1.678 \text{ MPa}$$

$$\epsilon_{long} = \frac{\sigma}{E} = \frac{1.678(10^6)}{2.70(10^9)} = 0.0006288$$

$$\delta = \epsilon_{long} L = 0.0006288\,(200) = 0.126 \text{ mm}$$ **Ans.**

$$\epsilon_{lat} = -\nu\epsilon_{long} = -0.4(0.0006288) = -0.0002515$$

$$\Delta d = \epsilon_{lat} d = -0.0002515\,(15) = -0.00377 \text{ mm}$$ **Ans.**

Ans:
$\delta = 0.126$ mm, $\Delta d = -0.00377$ mm

3–26. The thin-walled tube is subjected to an axial force of 40 kN. If the tube elongates 3 mm and its circumference decreases 0.09 mm, determine the modulus of elasticity, Poisson's ratio, and the shear modulus of the tube's material. The material behaves elastically.

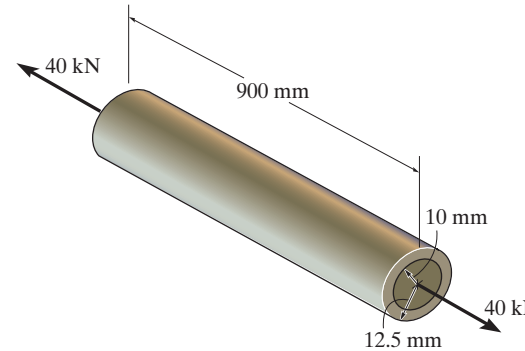

Normal Stress and Strain:

$$\sigma = \frac{P}{A} = \frac{40(10^3)}{\pi(0.0125^2 - 0.01^2)} = 226.35 \text{ MPa}$$

$$\epsilon_a = \frac{\delta}{L} = \frac{3}{900} = 3.3333\,(10^{-3}) \text{ mm/mm}$$

Applying Hooke's law,

$$\sigma = E\epsilon_a; \quad 226.35(10^6) = E\,[3.3333(10^{-3})]$$

$$E = 67.91(10^6) \text{ Pa} = 67.9 \text{ GPa} \qquad \textbf{Ans.}$$

Poisson's Ratio: The circumference of the loaded tube is $2\pi(12.5) - 0.09 = 78.4498$ mm. Thus, the outer radius of the tube is

$$r = \frac{78.4498}{2\pi} = 12.4857 \text{ mm}$$

The lateral strain is

$$\epsilon_{\text{lat}} = \frac{r - r_0}{r_0} = \frac{12.4857 - 12.5}{12.5} = -1.1459(10^{-3}) \text{ mm/mm}$$

$$\nu = -\frac{\epsilon_{\text{lat}}}{\epsilon_a} = -\left[\frac{-1.1459(10^{-3})}{3.3333(10^{-3})}\right] = 0.3438 = 0.344 \qquad \textbf{Ans.}$$

$$G = \frac{E}{2(1 + \nu)} = \frac{67.91(10^9)}{2(1 + 0.3438)} = 25.27(10^9) \text{ Pa} = 25.3 \text{ GPa} \qquad \textbf{Ans.}$$

Ans:
$E = 67.9$ GPa, $\nu = 0.344$, $G = 25.3$ GPa

3–27. When the two forces are placed on the beam, the diameter of the A-36 steel rod BC decreases from 40 mm to 39.99 mm. Determine the magnitude of each force **P**.

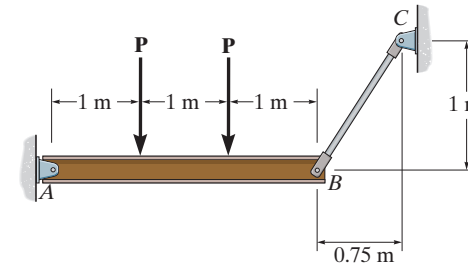

Equations of Equilibrium: The force developed in rod BC can be determined by writing the moment equation of equilibrium about A with reference to the free-body diagram of the beam shown in Fig. a.

$$\circlearrowleft + \Sigma M_A = 0; \qquad F_{BC}\left(\frac{4}{5}\right)(3) - P(2) - P(1) = 0 \qquad F_{BC} = 1.25P$$

Normal Stress and Strain: The lateral strain of rod BC is

$$\epsilon_{\text{lat}} = \frac{d - d_0}{d_0} = \frac{39.99 - 40}{40} = -0.25(10^{-3})\ \text{mm/mm}$$

$$\epsilon_{\text{lat}} = -\nu\epsilon_a; \qquad -0.25(10^{-3}) = -(0.32)\epsilon_a$$

$$\epsilon_a = 0.78125(10^{-3})\ \text{mm/mm}$$

Assuming that Hooke's Law applies,

$$\sigma_{BC} = E\epsilon_a; \qquad \sigma_{BC} = 200(10^9)(0.78125)(10^{-3}) = 156.25\ \text{MPa}$$

Since $\sigma < \sigma_Y$, the assumption is correct.

$$\sigma_{BC} = \frac{F_{BC}}{A_{BC}}; \qquad 156.25(10^6) = \frac{1.25P}{\frac{\pi}{4}(0.04^2)}$$

$$P = 157.08(10^3)\text{N} = 157\ \text{kN} \qquad \textbf{Ans.}$$

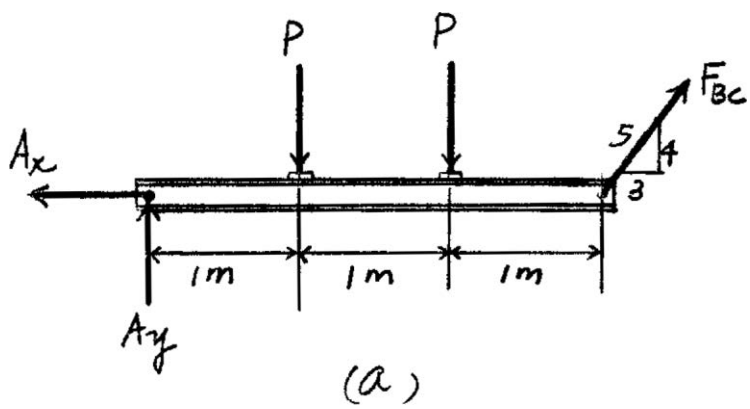

Ans:
$P = 157$ kN

***3–28.** If $P = 150$ kN, determine the elastic elongation of rod BC and the decrease in its diameter. Rod BC is made of A-36 steel and has a diameter of 40 mm.

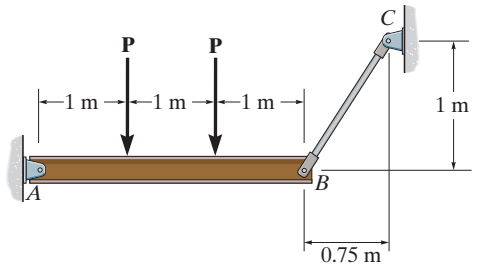

Equations of Equilibrium: The force developed in rod BC can be determined by writing the moment equation of equilibrium about A with reference to the free-body diagram of the beam shown in Fig. *a*.

$$\circlearrowleft + \Sigma M_A = 0; \qquad F_{BC}\left(\frac{4}{5}\right)(3) - 150(2) - 150(1) = 0 \qquad F_{BC} = 187.5 \text{ kN}$$

Normal Stress and Strain: The lateral strain of rod BC is

$$\sigma_{BC} = \frac{F_{BC}}{A_{BC}} = \frac{187.5(10^3)}{\frac{\pi}{4}(0.04^2)} = 149.21 \text{ MPa}$$

Since $\sigma < \sigma_Y$, Hooke's Law can be applied. Thus,

$$\sigma_{BC} = E\epsilon_{BC}; \qquad 149.21(10^6) = 200(10^9)\epsilon_{BC}$$

$$\epsilon_{BC} = 0.7460(10^{-3}) \text{ mm/mm}$$

The unstretched length of rod BC is $L_{BC} = \sqrt{750^2 + 1000^2} = 1250$ mm. Thus the elongation of this rod is given by

$$\delta_{BC} = \epsilon_{BC}L_{BC} = 0.7460(10^{-3})(1250) = 0.933 \text{ mm} \qquad \textbf{Ans.}$$

We obtain,

$$\epsilon_{\text{lat}} = -\nu\epsilon_a; \qquad \epsilon_{\text{lat}} = -(0.32)(0.7460)(10^{-3})$$

$$= -0.2387(10^{-3}) \text{ mm/mm}$$

Thus,

$$\delta d = \epsilon_{\text{lat}}\, d_{BC} = -0.2387(10^{-3})(40) = -9.55(10^{-3}) \text{ mm} \qquad \textbf{Ans.}$$

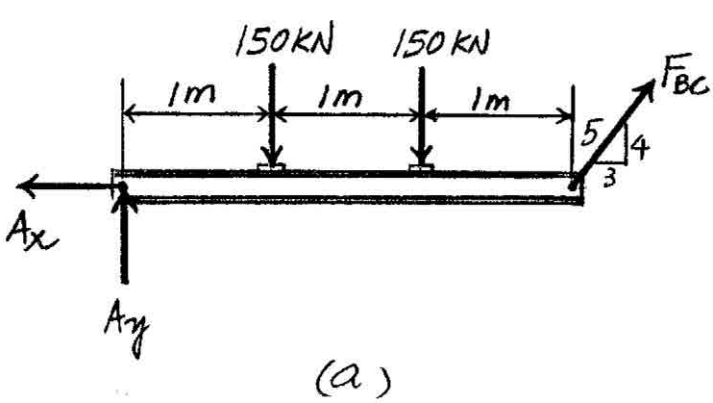

(a)

3–29. The friction pad A is used to support the member, which is subjected to an axial force of $P = 2$ kN. The pad is made from a material having a modulus of elasticity of $E = 4$ MPa and Poisson's ratio $\nu = 0.4$. If slipping does not occur, determine the normal and shear strains in the pad. The width is 50 mm. Assume that the material is linearly elastic. Also, neglect the effect of the moment acting on the pad.

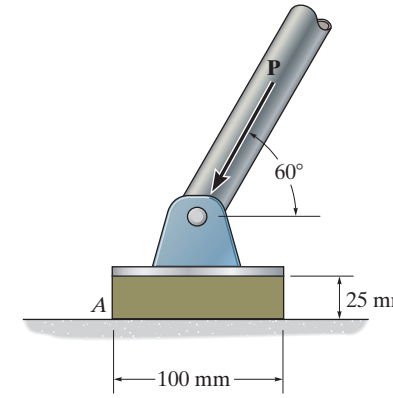

Internal Loading: The normal force and shear force acting on the friction pad can be determined by considering the equilibrium of the pin shown in Fig. *a*.

$\overset{+}{\rightarrow} \Sigma F_x = 0; \qquad V - 2\cos 60° = 0 \qquad V = 1 \text{ kN}$

$+\uparrow \Sigma F_y = 0; \qquad N - 2\sin 60° = 0 \qquad N = 1.732 \text{ kN}$

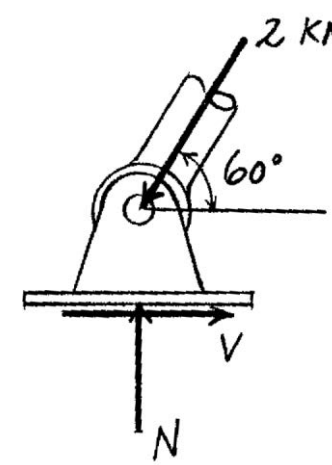

Normal and Shear Stress:

$$\tau = \frac{V}{A} = \frac{1(10^3)}{0.1(0.05)} = 200 \text{ kPa}$$

$$\sigma = \frac{N}{A} = \frac{1.732(10^3)}{0.1(0.05)} = 346.41 \text{ kPa}$$

Normal and Shear Strain: The shear modulus of the friction pad is

$$G = \frac{E}{2(1+\nu)} = \frac{4}{2(1+0.4)} = 1.429 \text{ MPa}$$

Applying Hooke's Law,

$\sigma = E\epsilon; \quad 346.41(10^3) = 4(10^6)\epsilon \qquad \epsilon = 0.08660 \text{ mm/mm}$ **Ans.**

$\tau = G\gamma; \quad 200(10^3) = 1.429(10^6)\gamma \qquad \gamma = 0.140 \text{ rad}$ **Ans.**

Ans:
$\epsilon = 0.08660$ mm/mm, $\gamma = 0.140$ rad

3–30. The lap joint is connected together using a 1.25 in. diameter bolt. If the bolt is made from a material having a shear stress–strain diagram that is approximated as shown, determine the shear strain developed in the shear plane of the bolt when $P = 75$ kip.

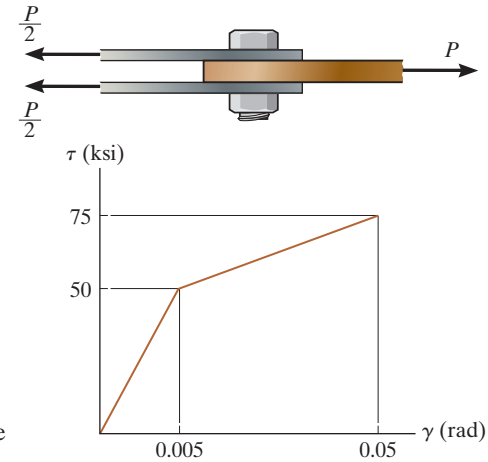

Internal Loadings: The shear force developed in the shear planes of the bolt can be determined by considering the equilibrium of the free-body diagram shown in Fig. *a*.

$$\overset{+}{\rightarrow}\Sigma F_x = 0; \qquad 75 - 2V = 0 \qquad V = 37.5 \text{ kip}$$

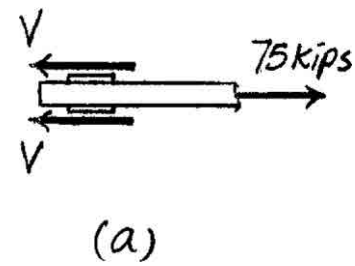

Shear Stress and Strain:

$$\tau = \frac{V}{A} = \frac{37.5}{\frac{\pi}{4}\left(1.25^2\right)} = 30.56 \text{ ksi}$$

Using this result, the corresponding shear strain can be obtained from the shear stress–strain diagram, Fig. *b*.

$$\frac{30.56}{\gamma} = \frac{50}{0.005}; \qquad \gamma = 3.06(10^{-3}) \text{ rad} \qquad \textbf{Ans.}$$

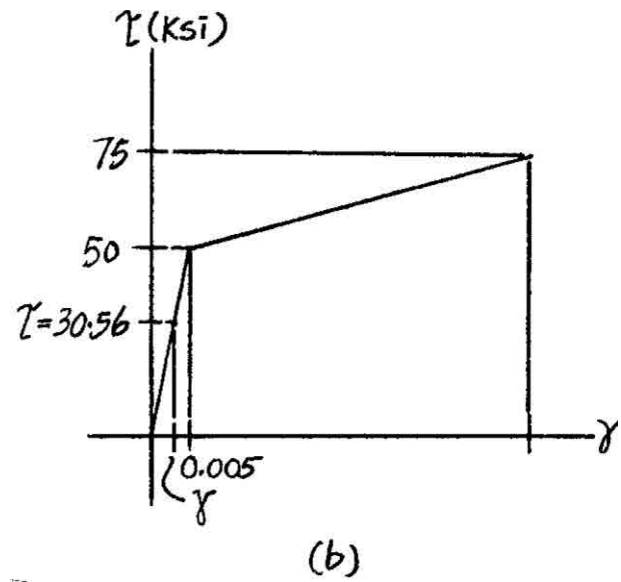

Ans:
$\gamma = 3.06(10^{-3})$ rad

3–31. The lap joint is connected together using a 1.25 in. diameter bolt. If the bolt is made from a material having a shear stress–strain diagram that is approximated as shown, determine the permanent shear strain in the shear plane of the bolt when the applied force $P = 150$ kip is removed.

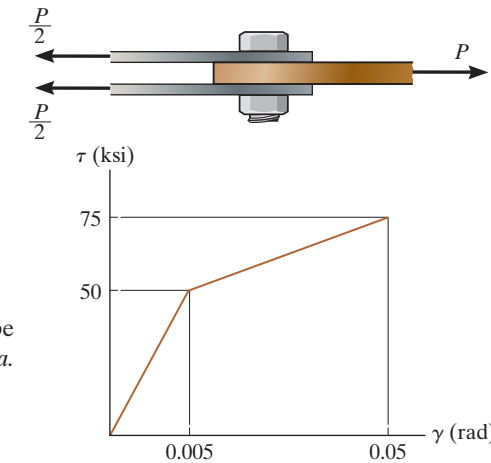

Internal Loadings: The shear force developed in the shear planes of the bolt can be determined by considering the equilibrium of the free-body diagram shown in Fig. *a*.

$$\overset{+}{\rightarrow}\Sigma F_x = 0; \qquad 150 - 2V = 0 \qquad V = 75 \text{ kip}$$

Shear Stress and Strain:

$$\tau = \frac{V}{A} = \frac{75}{\frac{\pi}{4}\left(1.25^2\right)} = 61.12 \text{ ksi}$$

Using this result, the corresponding shear strain can be obtained from the shear stress–strain diagram, Fig. *b*.

$$\frac{61.12 - 50}{\gamma - 0.005} = \frac{75 - 50}{0.05 - 0.005}; \qquad \gamma = 0.02501 \text{ rad}$$

When force **P** is removed, the shear strain recovers linearly along line *BC*, Fig. *b*, with a slope that is the same as line *OA*. This slope represents the shear modulus.

$$G = \frac{50}{0.005} = 10(10^3) \text{ ksi}$$

Thus, the elastic recovery of shear strain is

$$\tau = G\gamma_r; \qquad 61.12 = (10)(10^3)\gamma_r \qquad \gamma_r = 6.112(10^{-3}) \text{ rad}$$

And the permanent shear strain is

$$\gamma_P = \gamma - \gamma_r = 0.02501 - 6.112(10^{-3}) = 0.0189 \text{ rad} \qquad \textbf{Ans.}$$

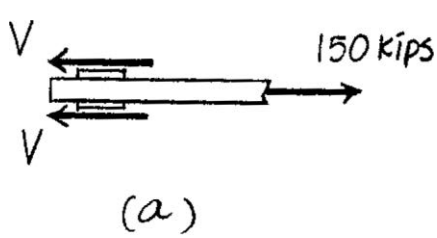

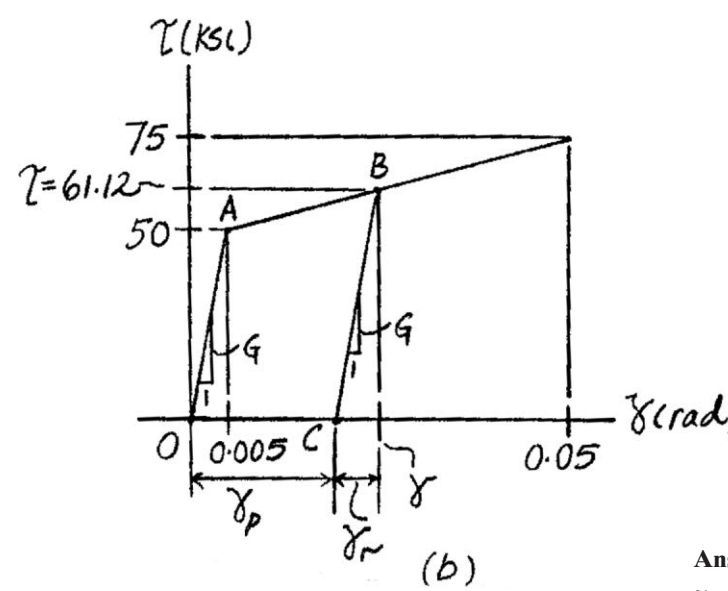

Ans:
$\gamma_P = 0.0189$ rad

***3–32.** A shear spring is made by bonding the rubber annulus to a rigid fixed ring and a plug. When an axial load **P** is placed on the plug, show that the slope at point y in the rubber is $dy/dr = -\tan\gamma = -\tan(P/(2\pi hGr))$. For small angles we can write $dy/dr = -P/(2\pi hGr)$. Integrate this expression and evaluate the constant of integration using the condition that $y = 0$ at $r = r_o$. From the result compute the deflection $y = \delta$ of the plug.

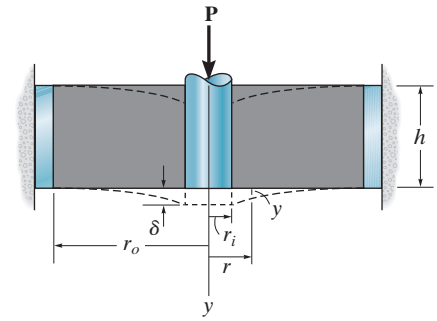

Shear Stress–Strain Relationship: Applying Hooke's law with $\tau_A = \dfrac{P}{2\pi\, r\, h}$.

$$\gamma = \frac{\tau_A}{G} = \frac{P}{2\pi\, h\, G\, r}$$

$$\frac{dy}{dr} = -\tan\gamma = -\tan\left(\frac{P}{2\pi\, h\, G\, r}\right) \qquad \text{(Q.E.D)}$$

If γ is small, then $\tan\gamma = \gamma$. Therefore,

$$\frac{dy}{dr} = -\frac{P}{2\pi\, h\, G\, r}$$

$$y = -\frac{P}{2\pi\, h\, G}\int\frac{dr}{r}$$

$$y = -\frac{P}{2\pi\, h\, G}\ln r + C$$

At $r = r_o$, $\quad y = 0$

$$0 = -\frac{P}{2\pi\, h\, G}\ln r_o + C$$

$$C = \frac{P}{2\pi\, h\, G}\ln r_o$$

Then, $y = \dfrac{P}{2\pi\, h\, G}\ln\dfrac{r_o}{r}$

At $r = r_i$, $\quad y = \delta$

$$\delta = \frac{P}{2\pi\, h\, G}\ln\frac{r_o}{r_i} \qquad \textbf{Ans.}$$

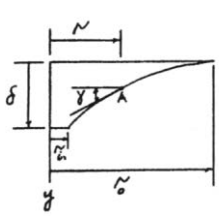

3–33. The aluminum block has a rectangular cross section and is subjected to an axial compressive force of 8 kip. If the 1.5-in. side changed its length to 1.500132 in., determine Poisson's ratio and the new length of the 2-in. side. $E_{al} = 10(10^3)$ ksi.

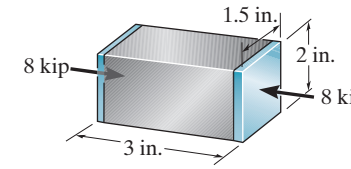

$$\sigma = \frac{P}{A} = \frac{8}{(2)(1.5)} = 2.667 \text{ ksi}$$

$$\epsilon_{long} = \frac{\sigma}{E} = \frac{-2.667}{10(10^3)} = -0.0002667$$

$$\epsilon_{lat} = \frac{1.500132 - 1.5}{1.5} = 0.0000880$$

$$\nu = \frac{-0.0000880}{-0.0002667} = 0.330$$ **Ans.**

$$h' = 2 + 0.0000880(2) = 2.000176 \text{ in.}$$ **Ans.**

Ans:
$\nu = 0.330$, $h' = 2.000176$ in.

3–34. A shear spring is made from two blocks of rubber, each having a height h, width b, and thickness a. The blocks are bonded to three plates as shown. If the plates are rigid and the shear modulus of the rubber is G, determine the displacement of plate A if a vertical load **P** is applied to this plate. Assume that the displacement is small so that $\delta = a \tan \gamma \approx a\gamma$.

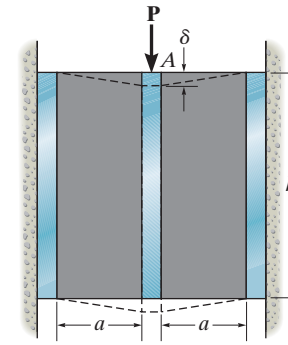

Average Shear Stress: The rubber block is subjected to a shear force of $V = \dfrac{P}{2}$.

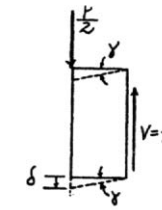

$$\tau = \frac{V}{A} = \frac{\frac{P}{2}}{b\,h} = \frac{P}{2\,b\,h}$$

Shear Strain: Applying Hooke's law for shear

$$\gamma = \frac{\tau}{G} = \frac{\frac{P}{2\,b\,h}}{G} = \frac{P}{2\,b\,h\,G}$$

Thus,

$$\delta = a\,\gamma = \quad = \frac{P\,a}{2\,b\,h\,G} \qquad \textbf{Ans.}$$

Ans:
$\delta = \dfrac{P\,a}{2\,b\,h\,G}$

3–35. The elastic portion of the tension stress–strain diagram for an aluminum alloy is shown in the figure. The specimen used for the test has a gauge length of 2 in. and a diameter of 0.5 in. When the applied load is 9 kip, the new diameter of the specimen is 0.49935 in. Compute the shear modulus G_{al} for the aluminum.

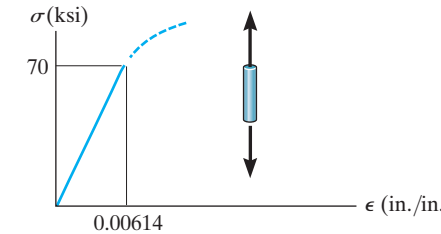

From the stress–strain diagram,

$$E_{al} = \frac{\sigma}{\epsilon} = \frac{70}{0.00614} = 11400.65 \text{ ksi}$$

When specimen is loaded with a 9 - kip load,

$$\sigma = \frac{P}{A} = \frac{9}{\frac{\pi}{4}(0.5)^2} = 45.84 \text{ ksi}$$

$$\epsilon_{\text{long}} = \frac{\sigma}{E} = \frac{45.84}{11400.65} = 0.0040205 \text{ in./in.}$$

$$\epsilon_{\text{lat}} = \frac{d' - d}{d} = \frac{0.49935 - 0.5}{0.5} = -0.0013 \text{ in./in.}$$

$$V = -\frac{\epsilon_{\text{lat}}}{\epsilon_{\text{long}}} = -\frac{-0.0013}{0.0040205} = 0.32334$$

$$G_{al} = \frac{E_{at}}{2(1 + v)} = \frac{11.4(10^3)}{2(1 + 0.32334)} = 4.31(10^3) \text{ ksi}$$ **Ans.**

Ans:
$G_{al} = 4.31(10^3)$ ksi

***3–36.** The elastic portion of the tension stress–strain diagram for an aluminum alloy is shown in the figure. The specimen used for the test has a gauge length of 2 in. and a diameter of 0.5 in. If the applied load is 10 kip, determine the new diameter of the specimen. The shear modulus is $G_{al} = 3.8(10^3)$ ksi.

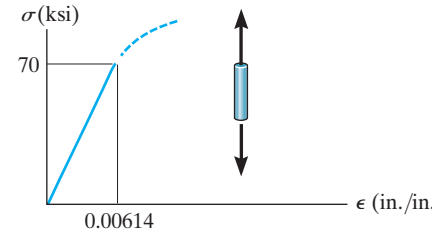

$$\sigma = \frac{P}{A} = \frac{10}{\frac{\pi}{4}(0.5)^2} = 50.9296 \text{ ksi}$$

From the stress–strain diagram

$$E = \frac{70}{0.00614} = 11400.65 \text{ ksi}$$

$$\epsilon_{long} = \frac{\sigma}{E} = \frac{50.9296}{11400.65} = 0.0044673 \text{ in./in.}$$

$$G = \frac{E}{2(1+\nu)}; \qquad 3.8(10^3) = \frac{11400.65}{2(1+\nu)}; \qquad \nu = 0.500$$

$$\epsilon_{lat} = -\nu\epsilon_{long} = -0.500(0.0044673) = -0.002234 \text{ in./in.}$$

$$\Delta d = \epsilon_{lat}\, d = -0.002234(0.5) = -0.001117 \text{ in.}$$

$$d' = d + \Delta d = 0.5 - 0.001117 = 0.4989 \text{ in.}$$ **Ans.**

3–37. The rigid beam rests in the horizontal position on two 2014-T6 aluminum cylinders having the *unloaded* lengths shown. If each cylinder has a diameter of 30 mm. determine the placement x of the applied 80-kN load so that the beam remains horizontal. What is the new diameter of cylinder A after the load is applied? $\nu_{al} = 0.35$.

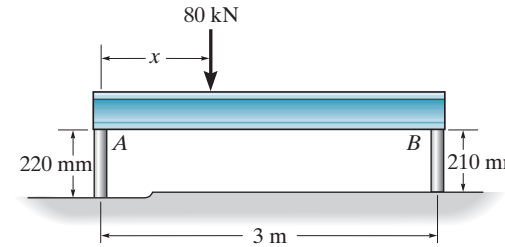

$$\circlearrowleft + \Sigma M_A = 0; \qquad F_B(3) - 80(x) = 0; \qquad F_B = \frac{80x}{3} \qquad (1)$$

$$\circlearrowleft + \Sigma M_B = 0; \qquad -F_A(3) + 80(3 - x) = 0; \qquad F_A = \frac{80(3 - x)}{3} \qquad (2)$$

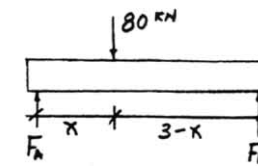

Since the beam is held horizontally, $\delta_A = \delta_B$

$$\sigma = \frac{P}{A}; \qquad \epsilon = \frac{\sigma}{E} = \frac{\frac{P}{A}}{E}$$

$$\delta = \epsilon L = \left(\frac{\frac{P}{A}}{E}\right) L = \frac{PL}{AE}$$

$$\delta_A = \delta_B; \qquad \frac{\frac{80(3 - x)}{3}(220)}{AE} = \frac{\frac{80x}{3}(210)}{AE}$$

$$80(3 - x)(220) = 80x(210)$$

$x = 1.53$ m **Ans.**

From Eq. (2),

$$F_A = 39.07 \text{ kN}$$

$$\sigma_A = \frac{F_A}{A} = \frac{39.07(10^3)}{\frac{\pi}{4}(0.03^2)} = 55.27 \text{ MPa}$$

$$\epsilon_{long} = \frac{\sigma_A}{E} = -\frac{55.27(10^6)}{73.1(10^9)} = -0.000756$$

$$\epsilon_{lat} = -\nu\epsilon_{long} = -0.35(-0.000756) = 0.0002646$$

$d'_A = d_A + d\,\epsilon_{lat} = 30 + 30(0.0002646) = 30.008$ mm **Ans.**

Ans:
$x = 1.53$ m, $d'_A = 30.008$ mm

3–38. The wires each have a diameter of $\frac{1}{2}$ in., length of 2 ft, and are made from 304 stainless steel. If $P = 6$ kip, determine the angle of tilt of the rigid beam AB.

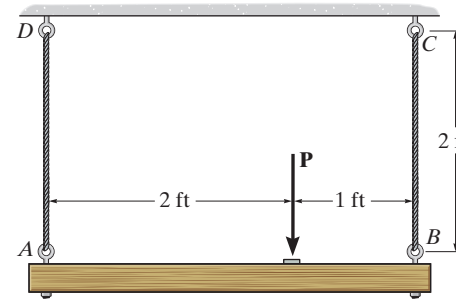

Equations of Equilibrium: Referring to the free-body diagram of beam AB shown in Fig. a,

$\circlearrowleft + \Sigma M_A = 0; \qquad F_{BC}(3) - 6(2) = 0 \qquad F_{BC} = 4 \text{ kip}$

$+\uparrow \Sigma M_B = 0; \qquad 6(1) - F_{AD}(3) = 0 \qquad F_{AD} = 2 \text{ kip}$

Normal Stress and Strain:

$$\sigma_{BC} = \frac{F_{BC}}{A_{BC}} = \frac{4(10^3)}{\frac{\pi}{4}\left(\frac{1}{2}\right)^2} = 20.37 \text{ ksi}$$

$$\sigma_{AD} = \frac{F_{AD}}{A_{AD}} = \frac{2(10^3)}{\frac{\pi}{4}\left(\frac{1}{2}\right)^2} = 10.19 \text{ ksi}$$

Since $\sigma_{BC} < \sigma_Y$ and $\sigma_A < \sigma_Y$, Hooke's Law can be applied.

$\sigma_{BC} = E\epsilon_{BC}; \qquad 20.37 = 28.0(10^3)\epsilon_{BC} \qquad \epsilon_{BC} = 0.7276(10^{-3})$ in./in.

$\sigma_{AD} = E\epsilon_{AD}; \qquad 10.19 = 28.0(10^3)\epsilon_{AD} \qquad \epsilon_{AD} = 0.3638(10^{-3})$ in./in.

Thus, the elongation of cables BC and AD are given by

$$\delta_{BC} = \epsilon_{BC}L_{BC} = 0.7276(10^{-3})(24) = 0.017462 \text{ in.}$$

$$\delta_{AD} = \epsilon_{AD}L_{AD} = 0.3638(10^{-3})(24) = 0.008731 \text{ in.}$$

Referring to the geometry shown in Fig. b and using small angle analysis,

$$\theta = \frac{\delta_{BC} - \delta_{AD}}{36} = \frac{0.017462 - 0.008731}{36} = 0.2425(10^{-3}) \text{ rad}\left(\frac{180°}{\pi \text{rad}}\right) = 0.0139° \qquad \textbf{Ans.}$$

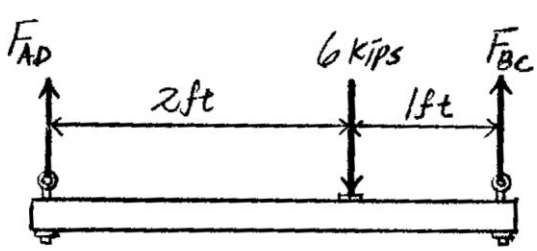

(a)

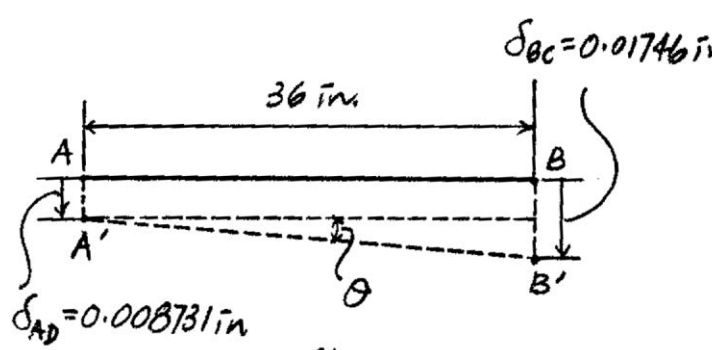

(b)

Ans:
$\theta = 0.0139°$

3–39. The wires each have a diameter of $\frac{1}{2}$ in., length of 2 ft, and are made from 304 stainless steel. Determine the magnitude of force **P** so that the rigid beam tilts 0.015°.

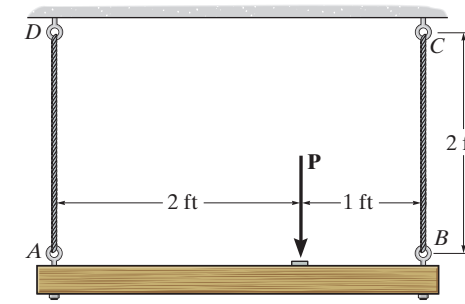

Equations of Equilibrium: Referring to the free-body diagram of beam AB shown in Fig. a,

$\circlearrowleft + \Sigma M_A = 0; \qquad F_{BC}(3) - P(2) = 0 \qquad F_{BC} = 0.6667P$

$+\uparrow \Sigma M_B = 0; \qquad P(1) - F_{AD}(3) = 0 \qquad F_{AD} = 0.3333P$

Normal Stress and Strain:

$$\sigma_{BC} = \frac{F_{BC}}{A_{BC}} = \frac{0.6667P}{\frac{\pi}{4}\left(\frac{1}{2}\right)^2} = 3.3953P$$

$$\sigma_{AD} = \frac{F_{AD}}{A_{AD}} = \frac{0.3333P}{\frac{\pi}{4}\left(\frac{1}{2}\right)^2} = 1.6977P$$

Assuming that $\sigma_{BC} < \sigma_Y$ and $\sigma_{AD} < \sigma_Y$ and applying Hooke's Law,

$\sigma_{BC} = E\epsilon_{BC}; \qquad 3.3953P = 28.0(10^6)\epsilon_{BC} \qquad \epsilon_{BC} = 0.12126(10^{-6})P$

$\sigma_{AD} = E\epsilon_{AD}; \qquad 1.6977P = 28.0(10^6)\epsilon_{AD} \qquad \epsilon_{AD} = 60.6305(10^{-9})P$

Thus, the elongation of cables BC and AD are given by

$$\delta_{BC} = \epsilon_{BC}L_{BC} = 0.12126(10^{-6})P(24) = 2.9103(10^{-6})P$$

$$\delta_{AD} = \epsilon_{AD}L_{AD} = 60.6305(10^{-9})P(24) = 1.4551(10^{-6})P$$

Here, the angle of the tile is $\theta = 0.015°\left(\frac{\pi \text{rad}}{180°}\right) = 0.2618(10^{-3})$ rad. Using small angle analysis,

$$\theta = \frac{\delta_{BC} - \delta_{AD}}{36}; \qquad 0.2618(10^{-3}) = \frac{2.9103(10^{-6})P - 1.4551(10^{-6})P}{36}$$

$$P = 6476.93 \text{ lb} = 6.48 \text{ kip} \qquad \textbf{Ans.}$$

Since $\sigma_{BC} = 3.3953(6476.93) = 21.99 \text{ ksi} < \sigma_Y$ and $\sigma_{AD} = 1.6977(6476.93) = 11.00 \text{ ksi} < \sigma_Y$, the assumption is correct.

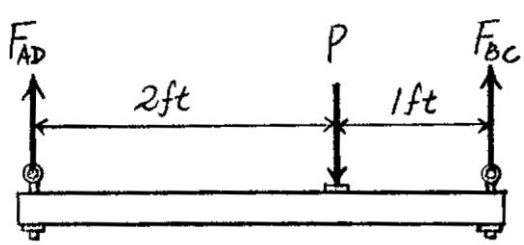

(a)

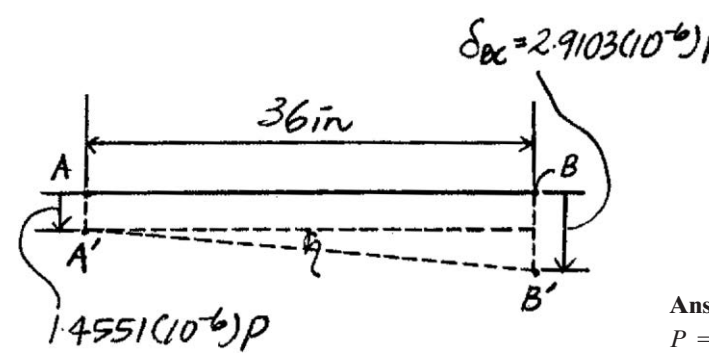

Ans:
$P = 6.48$ kip

***3–40.** The head H is connected to the cylinder of a compressor using six steel bolts. If the clamping force in each bolt is 800 lb, determine the normal strain in the bolts. Each bolt has a diameter of $\frac{3}{16}$ in. If $\sigma_Y = 40$ ksi and $E_{st} = 29(10^3)$ ksi, what is the strain in each bolt when the nut is unscrewed so that the clamping force is released?

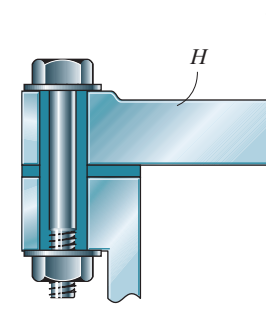

Normal Stress:

$$\sigma = \frac{P}{A} = \frac{800}{\frac{\pi}{4}\left(\frac{3}{16}\right)^2} = 28.97 \text{ ksi} < \sigma_\gamma = 40 \text{ ksi}$$

Normal Strain: Since $\sigma < \sigma_\gamma$, Hooke's law is still valid.

$$\epsilon = \frac{\sigma}{E} = \frac{28.97}{29(10^3)} = 0.000999 \text{ in./in.} \qquad \textbf{Ans.}$$

If the nut is unscrewed, the load is zero. Therefore, the strain $\epsilon = 0$ **Ans.**

3–41. The stress–strain diagram for polyethylene, which is used to sheath coaxial cables, is determined from testing a specimen that has a gauge length of 10 in. If a load P on the specimen develops a strain of $\epsilon = 0.024$ in./in., determine the approximate length of the specimen, measured between the gauge points, when the load is removed. Assume the specimen recovers elastically.

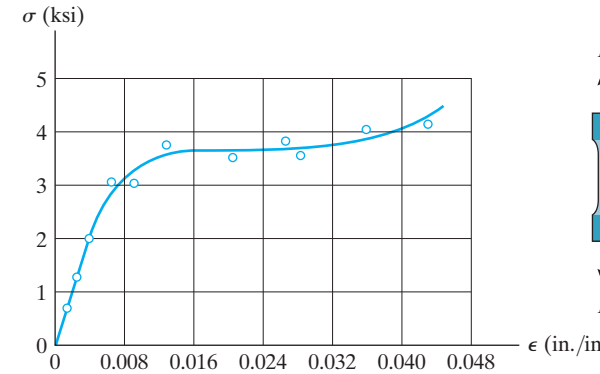

Modulus of Elasticity: From the stress–strain diagram, $\sigma = 2$ ksi when $\epsilon = 0.004$ in./in.

$$E = \frac{2 - 0}{0.004 - 0} = 0.500(10^3) \text{ ksi}$$

Elastic Recovery: From the stress–strain diagram, $\sigma = 3.70$ ksi when $\epsilon = 0.024$ in./in.

$$\text{Elastic recovery} = \frac{\sigma}{E} = \frac{3.70}{0.500(10^3)} = 0.00740 \text{ in./in.}$$

Permanent Set:

$$\text{Permanent set} = 0.024 - 0.00740 = 0.0166 \text{ in./in.}$$

Thus,

$$\text{Permanent elongation} = 0.0166(10) = 0.166 \text{ in.}$$

$$\begin{aligned} L &= L_0 + \text{permanent elongation} \\ &= 10 + 0.166 \\ &= 10.17 \text{ in.} \end{aligned}$$

Ans.

Ans:
$L = 10.17$ in.

3–42. The pipe with two rigid caps attached to its ends is subjected to an axial force P. If the pipe is made from a material having a modulus of elasticity E and Poisson's ratio ν, determine the change in volume of the material.

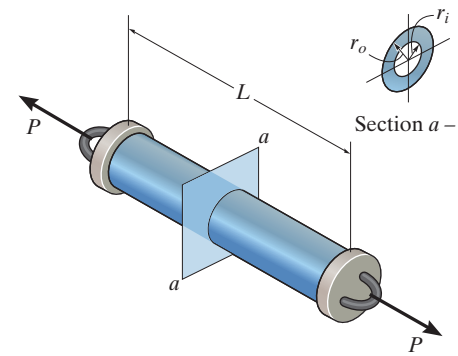

Normal Stress: The rod is subjected to uniaxial loading. Thus, $\sigma_{\text{long}} = \dfrac{P}{A}$ and $\sigma_{\text{lat}} = 0$.

$$\delta V = A\delta L + 2\pi r L \delta r$$

$$= A\epsilon_{\text{long}} L + 2\pi r L \epsilon_{\text{lat}} r$$

Using Poisson's ratio and noting that $AL = \pi r^2 L = V$,

$$\delta V = \epsilon_{\text{long}} V - 2\nu\epsilon_{\text{long}} V$$

$$= \epsilon_{\text{long}}(1 - 2\nu)V$$

$$= \frac{\sigma_{\text{long}}}{E}(1 - 2\nu)V$$

Since $\sigma_{\text{long}} = P/A$,

$$\delta V = \frac{P}{AE}(1 - 2\nu)AL$$

$$= \frac{PL}{E}(1 - 2\nu) \qquad \textbf{Ans.}$$

Ans:
$\delta V = \dfrac{PL}{E}(1 - 2\nu)$

3–43. The 8-mm-diameter bolt is made of an aluminum alloy. It fits through a magnesium sleeve that has an inner diameter of 12 mm and an outer diameter of 20 mm. If the original lengths of the bolt and sleeve are 80 mm and 50 mm, respectively, determine the strains in the sleeve and the bolt if the nut on the bolt is tightened so that the tension in the bolt is 8 kN. Assume the material at A is rigid. $E_{al} = 70$ GPa, $E_{mg} = 45$ GPa.

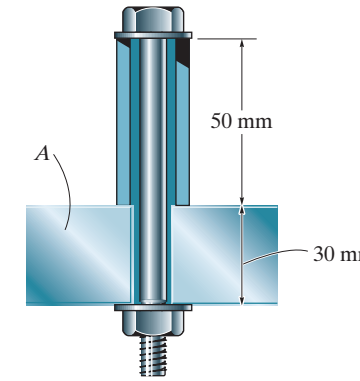

Normal Stress:

$$\sigma_b = \frac{P}{A_b} = \frac{8(10^3)}{\frac{\pi}{4}(0.008^2)} = 159.15 \text{ MPa}$$

$$\sigma_s = \frac{P}{A_s} = \frac{8(10^3)}{\frac{\pi}{4}(0.02^2 - 0.012^2)} = 39.79 \text{ MPa}$$

Normal Strain: Applying Hooke's Law

$$\epsilon_b = \frac{\sigma_b}{E_{al}} = \frac{159.15(10^6)}{70(10^9)} = 0.00227 \text{ mm/mm}$$ **Ans.**

$$\epsilon_s = \frac{\sigma_s}{E_{mg}} = \frac{39.79(10^6)}{45(10^9)} = 0.000884 \text{ mm/mm}$$ **Ans.**

Ans:
$\epsilon_b = 0.00227$ mm/mm, $\epsilon_s = 0.000884$ mm/mm

***3–44.** An acetal polymer block is fixed to the rigid plates at its top and bottom surfaces. If the top plate displaces 2 mm horizontally when it is subjected to a horizontal force $P = 2$ kN, determine the shear modulus of the polymer. The width of the block is 100 mm. Assume that the polymer is linearly elastic and use small angle analysis.

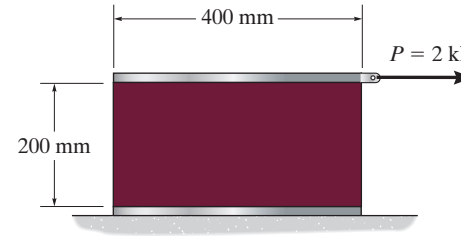

Normal and Shear Stress:

$$\tau = \frac{V}{A} = \frac{2(10^3)}{0.4(0.1)} = 50 \text{ kPa}$$

Referring to the geometry of the undeformed and deformed shape of the block shown in Fig. *a*,

$$\gamma = \frac{2}{200} = 0.01 \text{ rad}$$

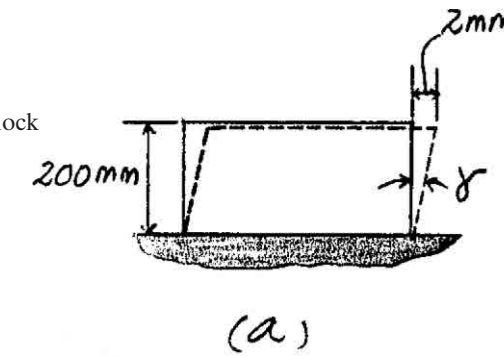

Applying Hooke's Law,

$\tau = G\gamma; \quad 50(10^3) = G(0.01)$

$$G = 5 \text{ MPa} \qquad \textbf{Ans.}$$

4–1. The A992 steel rod is subjected to the loading shown. If the cross-sectional area of the rod is 60 mm^2, determine the displacement of B and A, Neglect the size of the couplings at B, C, and D.

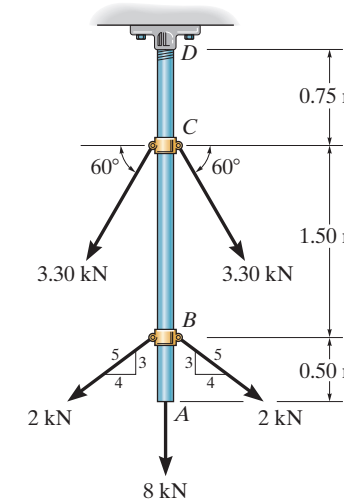

$$\delta_B = \Sigma\frac{PL}{AE} = \frac{16.116(10^3)(0.75)}{60(10^{-6})(200)(10^9)} + \frac{10.4(10^3)(1.50)}{60(10^{-6})(200)(10^9)}$$

$$= 0.00231 \text{ m} = 2.31 \text{ mm}$$ **Ans.**

$$\delta_A = \delta_B + \frac{8(10^3)(0.5)}{60(10^{-6})(200)(10^9)} = 0.00264 \text{ m} = 2.64 \text{ mm}$$ **Ans.**

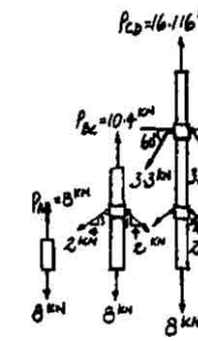

Ans:
$\delta_B = 2.31$ mm, $\delta_A = 2.64$ mm

***4–2.** The copper shaft is subjected to the axial loads shown. Determine the displacement of end A with respect to end D if the diameters of each segment are $d_{AB} = 0.75$ in., $d_{BC} = 1$ in., and $d_{CD} = 0.5$ in. Take $E_{cu} = 18(10^3)$ ksi.

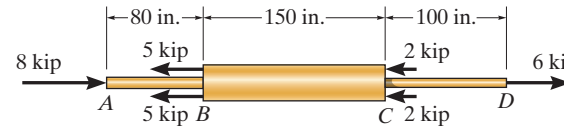

$$\delta_{A/D} = \Sigma\frac{PL}{AE} = \frac{-8(80)}{\frac{\pi}{4}(0.75)^2(18)(10^3)} + \frac{2(150)}{\frac{\pi}{4}(1)^2(18)(10^3)} + \frac{6(100)}{\frac{\pi}{4}(0.5)^2(18)(10^3)}$$

$$= 0.111 \text{ in.}$$ **Ans.**

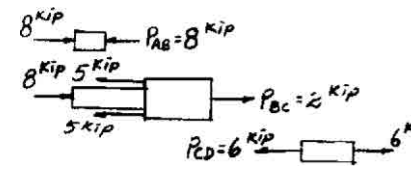

The positive sign indicates that end A moves away from end D.

Ans:
$\delta_{A/D} = 0.111$ in. away from end D.

4–3. The composite shaft, consisting of aluminum, copper, and steel sections, is subjected to the loading shown. Determine the displacement of end A with respect to end D and the normal stress in each section. The cross-sectional area and modulus of elasticity for each section are shown in the figure. Neglect the size of the collars at B and C.

Aluminum	Copper	Steel
$E_{al} = 10(10^3)$ ksi	$E_{cu} = 18(10^3)$ ksi	$E_{st} = 29(10^3)$ ksi
$A_{AB} = 0.09$ in^2	$A_{BC} = 0.12$ in^2	$A_{CD} = 0.06$ in^2

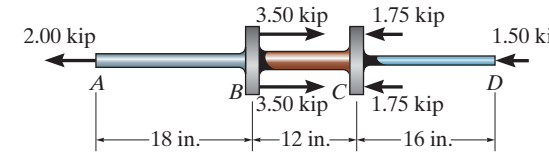

$$\sigma_{AB} = \frac{P_{AB}}{A_{AB}} = \frac{2}{0.09} = 22.2 \text{ ksi} \quad \text{(T)} \qquad \textbf{Ans.}$$

$$\sigma_{BC} = \frac{P_{BC}}{A_{BC}} = \frac{5}{0.12} = 41.7 \text{ ksi} \quad \text{(C)} \qquad \textbf{Ans.}$$

$$\sigma_{CD} = \frac{P_{BC}}{A_{BC}} = \frac{1.5}{0.06} = 25.0 \text{ ksi} \quad \text{(C)} \qquad \textbf{Ans.}$$

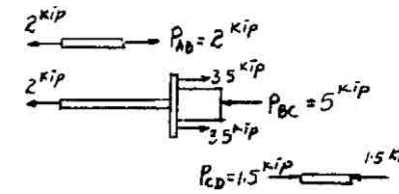

$$\delta_{ND} = \Sigma\frac{PL}{AE} = \frac{2(18)}{(0.09)(10)(10^3)} + \frac{(-5)(12)}{(0.12)(18)(10^3)} + \frac{(-1.5)(16)}{(0.06)(29)(10^3)}$$

$$= -0.00157 \text{ in.} \qquad \textbf{Ans.}$$

The negative sign indicates end A moves towards end D.

Ans:
$\sigma_{AB} = 22.2$ ksi (T), $\sigma_{BC} = 41.7$ ksi (C), $\sigma_{CD} = 25.0$ ksi (C), $\delta_{A/D} = 0.00157$ in. towards end D

***4–4.** Determine the displacement of B with respect to C of the composite shaft in Prob. 4–3.

Aluminum	Copper	Steel
$E_{al} = 10(10^3)$ ksi	$E_{cu} = 18(10^3)$ ksi	$E_{st} = 29(10^3)$ ksi
$A_{AB} = 0.09$ in^2	$A_{BC} = 0.12$ in^2	$A_{CD} = 0.06$ in^2

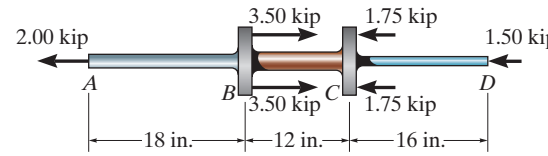

$$\delta_{B/C} = \frac{PL}{AE} = \frac{(-5)(12)}{(0.12)(18)(10^3)} = -0.0278 \text{ in.}$$

Ans.

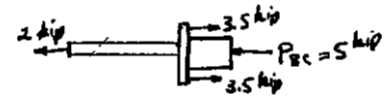

The negative sign indicates end B moves towards end C.

4–5. The assembly consists of a steel rod CB and an aluminum rod BA, each having a diameter of 12 mm. If the rod is subjected to the axial loadings at A and at the coupling B, determine the displacement of the coupling B and the end A. The unstretched length of each segment is shown in the figure. Neglect the size of the connections at B and C, and assume that they are rigid. $E_{st} = 200$ GPa, $E_{al} = 70$ GPa.

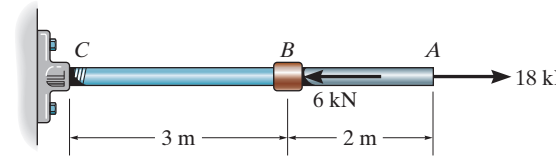

$$\delta_B = \frac{PL}{AE} = \frac{12(10^3)(3)}{\frac{\pi}{4}(0.012)^2(200)(10^9)} = 0.00159 \text{ m} = 1.59 \text{ mm}$$ **Ans.**

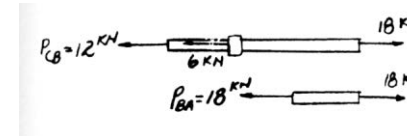

$$\delta_A = \Sigma\frac{PL}{AE} = \frac{12(10^3)(3)}{\frac{\pi}{4}(0.012)^2(200)(10^9)} + \frac{18(10^3)(2)}{\frac{\pi}{4}(0.012)^2(70)(10^9)}$$

$$= 0.00614 \text{ m} = 6.14 \text{ mm}$$ **Ans.**

Ans:
$\delta_B = 1.59$ mm, $\delta_A = 6.14$ mm

4–6. The bar has a cross-sectional area of $3\ \text{in}^2$, and $E = 35(10^3)$ ksi. Determine the displacement of its end A when it is subjected to the distributed loading.

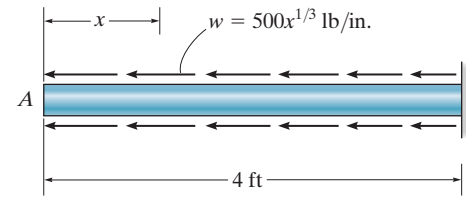

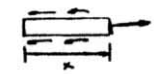

$$P(x) = \int_0^x w\,dx = 500\int_0^x x^{\frac{1}{3}}\,dx = \frac{1500}{4}x^{\frac{4}{3}}$$

$$\delta_A = \int_0^L \frac{P(x)\,dx}{AE} = \frac{1}{(3)(35)(10^6)}\int_0^{4(12)} \frac{1500}{4}x^{\frac{4}{3}}\,dx = \left(\frac{1500}{(3)(35)(10^8)(4)}\right)\left(\frac{3}{7}\right)(48)^{\frac{1}{3}}$$

$\delta_A = 0.0128$ in. **Ans.**

Ans:
$\delta_A = 0.0128$ in.

4–7. If $P_1 = 50$ kip and $P_2 = 150$ kip, determine the vertical displacement of end A of the high strength precast concrete column.

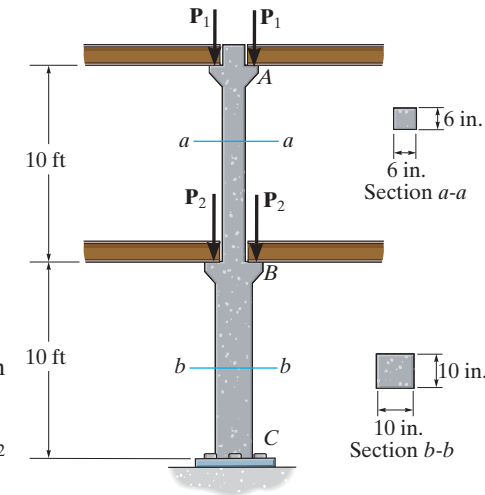

Internal Loading: The normal forces developed in segments AB and BC are shown on the free-body diagrams of these segments in Figs. a and b, respectively.

Displacement: The cross-sectional area of segments AB and BC are $A_{AB} = 6(6) = 36\ \text{in}^2$ and $A_{BC} = 10(10) = 100\ \text{in}^2$.

$$\delta_{A/C} = \Sigma\frac{PL}{AE} = \frac{P_{AB}L_{AB}}{A_{AB}E_{\text{con}}} + \frac{P_{BC}L_{BC}}{A_{BC}E_{\text{con}}}$$

$$= \frac{(-100)(10)(12)}{36(4.2)(10^3)} + \frac{-400(10)(12)}{100(4.2)(10^3)}$$

$$= -0.194\ \text{in.} \qquad \textbf{Ans.}$$

The negative sign indicates that end A is moving towards C.

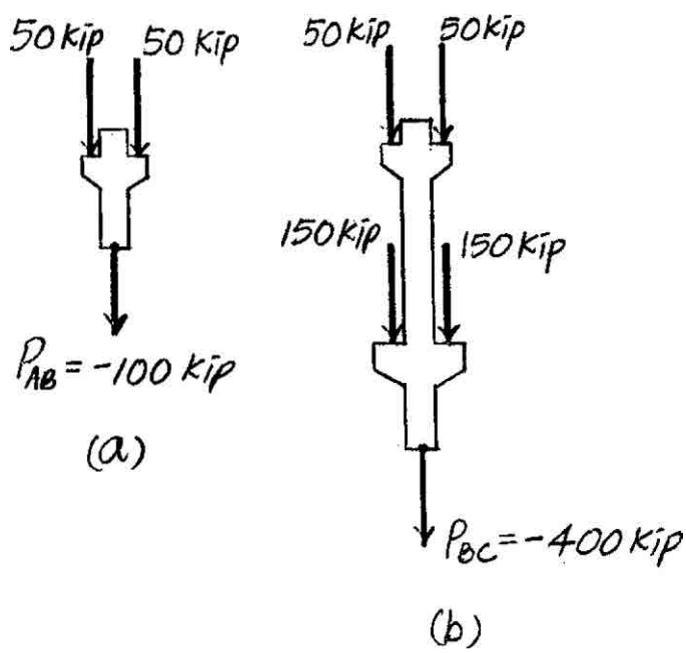

Ans:
$\delta_A = -0.194$ in.

***4–8.** If the vertical displacements of end A of the high strength precast concrete column relative to B and B relative to C are 0.08 in. and 0.1 in., respectively, determine the magnitudes of $\mathbf{P}_1$ and $\mathbf{P}_2$.

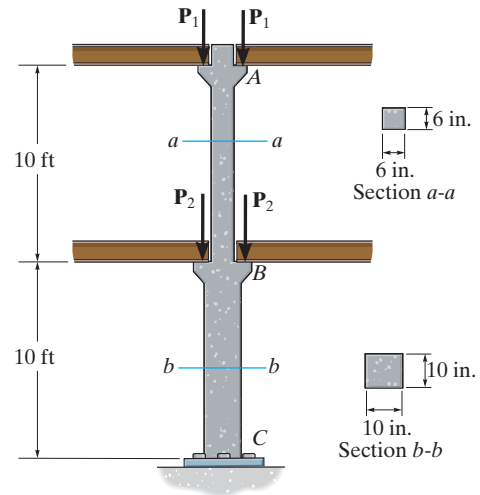

Internal Loading: The normal forces developed in segments AB and BC are shown on the free-body diagrams of these segments in Figs. a and b, respectively.

Displacement: The cross-sectional area of segments AB and BC are $A_{AB} = 6(6) = 36\text{ in}^2$ and $A_{BC} = 10(10) = 100\text{ in}^2$.

$$\delta_{A/B} = \frac{P_{AB}\,L_{AB}}{A_{AB}\,E_{\text{con}}}$$

$$-0.08 = \frac{-2P_1(10)(12)}{36(4.2)(10^3)}$$

$P_1 = 50.4\text{ kip}$ **Ans.**

$$\delta_{B/C} = \frac{P_{BC}\,L_{BC}}{A_{BC}\,E_{\text{con}}}$$

$$-0.1 = \frac{-[2(50.4) + 2P_2](10)(12)}{100(4.2)(10^3)}$$

$P_2 = 124.6\text{ kip} = 125\text{ kip}$ **Ans.**

The negative sign indicates that end A is moving towards C.

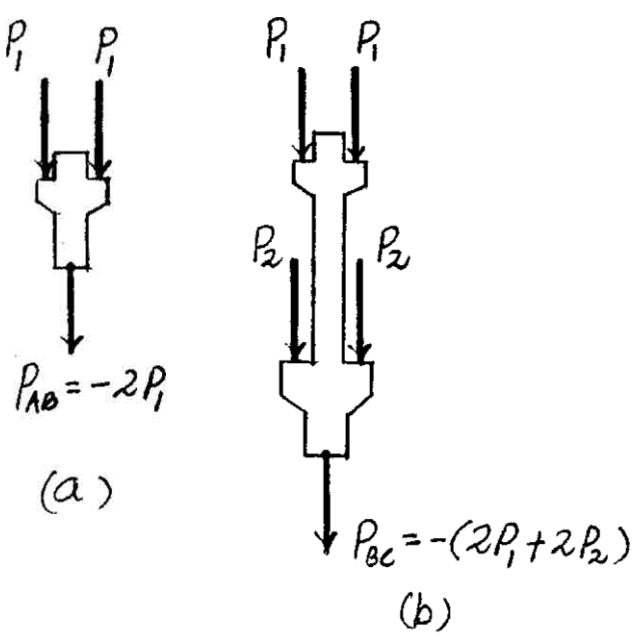

4–9. The assembly consists of two 10-mm diameter red brass C83400 copper rods AB and CD, a 15-mm diameter 304 stainless steel rod EF, and a rigid bar G. If $P = 5$ kN, determine the horizontal displacement of end F of rod EF.

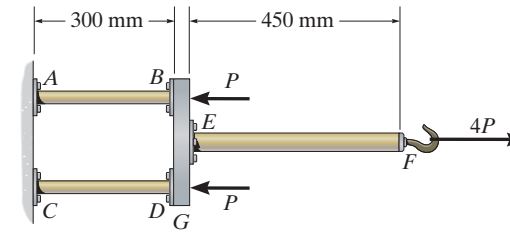

Internal Loading: The normal forces developed in rods EF, AB, and CD are shown on the free-body diagrams in Figs. a and b.

Displacement: The cross-sectional areas of rods EF and AB are $A_{EF} = \frac{\pi}{4}(0.015^2) = 56.25(10^{-6})\pi \text{ m}^2$ and $A_{AB} = \frac{\pi}{4}(0.01^2) = 25(10^{-6})\pi \text{ m}^2$.

$$\delta_F = \Sigma\frac{PL}{AE} = \frac{P_{EF}L_{EF}}{A_{EF}E_{st}} + \frac{P_{AB}L_{AB}}{A_{AB}E_{br}}$$

$$= \frac{20(10^3)(450)}{56.25(10^{-6})\pi(193)(10^9)} + \frac{5(10^3)(300)}{25(10^{-6})\pi(101)(10^9)}$$

$$= 0.453 \text{ mm}$$ **Ans.**

The positive sign indicates that end F moves away from the fixed end.

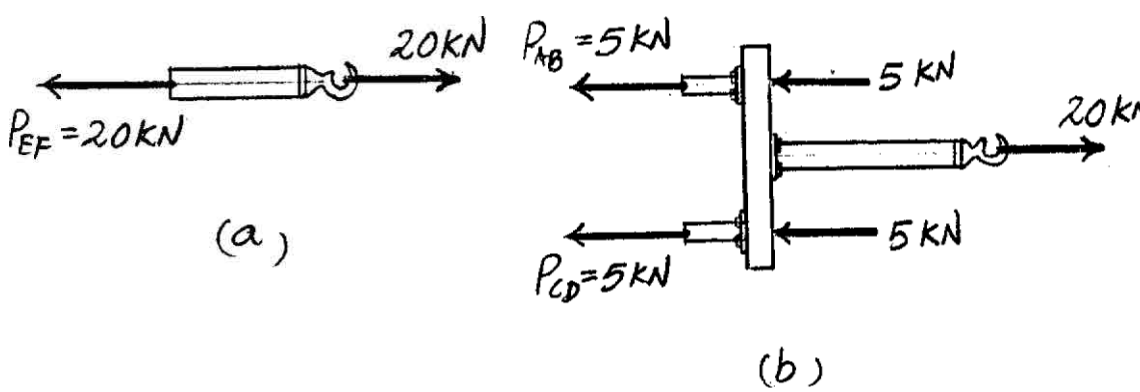

Ans:
$\delta_F = 0.453$ mm

4–10. The assembly consists of two 10-mm diameter red brass C83400 copper rods AB and CD, a 15-mm diameter 304 stainless steel rod EF, and a rigid bar G. If the horizontal displacement of end F of rod EF is 0.45 mm, determine the magnitude of P.

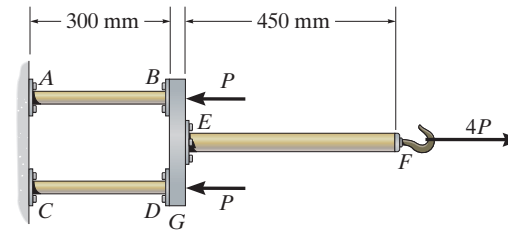

Internal Loading: The normal forces developed in rods EF, AB, and CD are shown on the free-body diagrams in Figs. a and b.

Displacement: The cross-sectional areas of rods EF and AB are $A_{EF} = \frac{\pi}{4}(0.015^2) = 56.25(10^{-6})\pi \text{ m}^2$ and

$$A_{AB} = \frac{\pi}{4}(0.01^2) = 25(10^{-6})\pi \text{ m}^2.$$

$$\delta_F = \Sigma\frac{PL}{AE} = \frac{P_{EF}L_{EF}}{A_{EF}E_{st}} + \frac{P_{AB}L_{AB}}{A_{AB}E_{br}}$$

$$0.45 = \frac{4P(450)}{56.25(10^{-6})\pi(193)(10^9)} + \frac{P(300)}{25(10^{-6})\pi(101)(10^9)}$$

$P = 4967 \text{ N} = 4.97 \text{ kN}$ **Ans.**

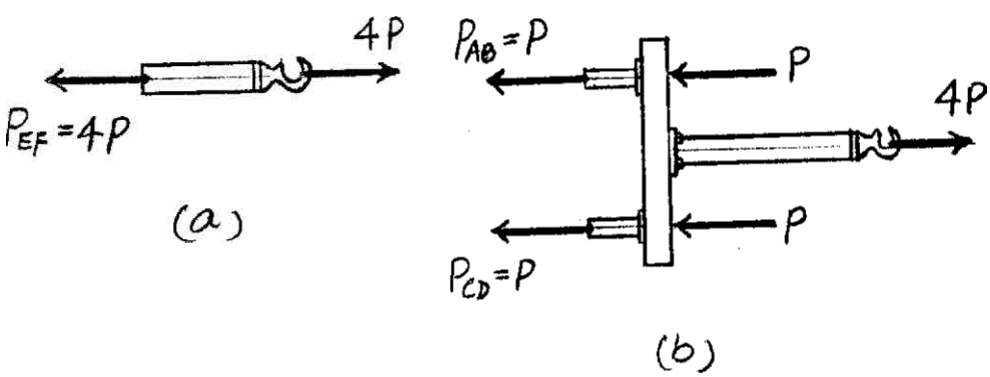

Ans:
$P = 49.7 \text{ kN}$

4–11. The load is supported by the four 304 stainless steel wires that are connected to the rigid members AB and DC. Determine the vertical displacement of the 500-lb load if the members were originally horizontal when the load was applied. Each wire has a cross-sectional area of 0.025 in^2.

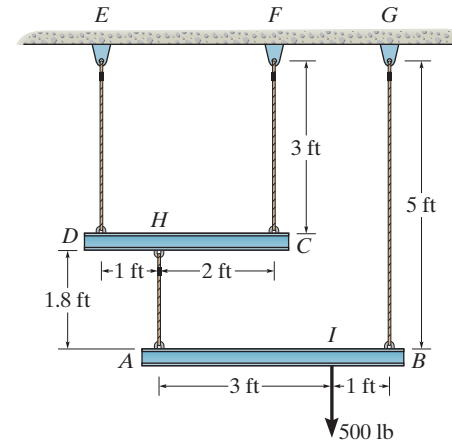

Internal Forces in the wires:

FBD (b)

$\circlearrowleft + \Sigma M_A = 0; \qquad F_{BC}(4) - 500(3) = 0 \qquad F_{BC} = 375.0 \text{ lb}$

$+\uparrow \Sigma F_y = 0; \qquad F_{AH} + 375.0 - 500 = 0 \qquad F_{AH} = 125.0 \text{ lb}$

FBD (a)

$\circlearrowleft + \Sigma M_D = 0; \qquad F_{CF}(3) - 125.0(1) = 0 \qquad F_{CF} = 41.67 \text{ lb}$

$+\uparrow \Sigma F_y = 0; \qquad F_{DE} + 41.67 - 125.0 = 0 \qquad F_{DE} = 83.33 \text{ lb}$

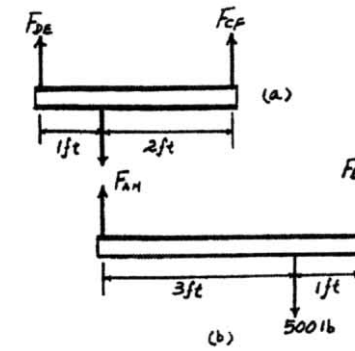

Displacement:

$$\delta_D = \frac{F_{DE}L_{DE}}{A_{DE}E} = \frac{83.33(3)(12)}{0.025(28.0)(10^6)} = 0.0042857 \text{ in.}$$

$$\delta_C = \frac{F_{CF}L_{CF}}{A_{CF}E} = \frac{41.67(3)(12)}{0.025(28.0)(10^6)} = 0.0021429 \text{ in.}$$

$$\frac{\delta'_H}{2} = \frac{0.0021429}{3}; \qquad \delta'_H = 0.0014286 \text{ in.}$$

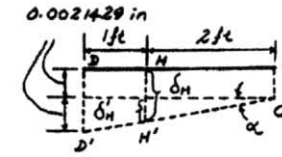

$$\delta_H = 0.0014286 + 0.0021429 = 0.0035714 \text{ in.}$$

$$\delta_{A/H} = \frac{F_{AH}L_{AH}}{A_{AH}E} = \frac{125.0(1.8)(12)}{0.025(28.0)(10^6)} = 0.0038571 \text{ in.}$$

$$\delta_A = \delta_H + \delta_{A/H} = 0.0035714 + 0.0038571 = 0.0074286 \text{ in.}$$

$$\delta_B = \frac{F_{BG}L_{BG}}{A_{BG}E} = \frac{375.0(5)(12)}{0.025(28.0)(10^6)} = 0.0321428 \text{ in.}$$

$$\frac{\delta'_l}{3} = \frac{0.0247143}{4}; \qquad \delta'_l = 0.0185357 \text{ in.}$$

$$\delta_l = 0.0074286 + 0.0185357 = 0.0260 \text{ in.} \qquad \textbf{Ans.}$$

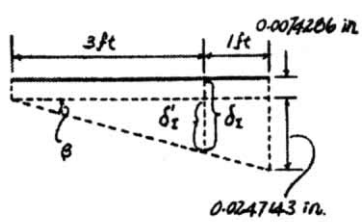

Ans:
$\delta_l = 0.0260$ in.

***4–12.** The load is supported by the four 304 stainless steel wires that are connected to the rigid members AB and DC. Determine the angle of tilt of each member after the 500-lb load is applied. The members were originally horizontal, and each wire has a cross-sectional area of $0.025\ \text{in}^2$.

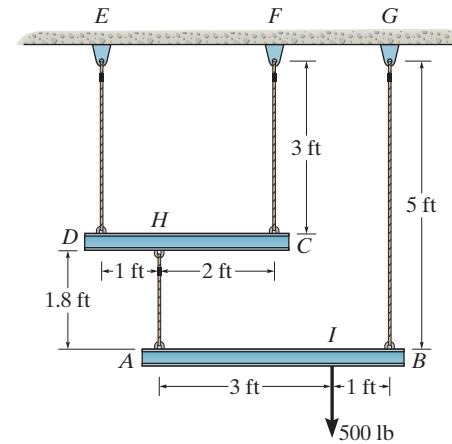

Internal Forces in the wires:

FBD (b)

$\circlearrowleft + \Sigma M_A = 0; \qquad F_{BG}(4) - 500(3) = 0 \qquad F_{BG} = 375.0\ \text{lb}$

$+\uparrow \Sigma F_y = 0; \qquad F_{AH} + 375.0 - 500 = 0 \qquad F_{AH} = 125.0\ \text{lb}$

FBD (a)

$\circlearrowleft + \Sigma M_D = 0; \qquad F_{CF}(3) - 125.0(1) = 0 \qquad F_{CF} = 41.67\ \text{lb}$

$+\uparrow \Sigma F_y = 0; \qquad F_{DE} + 41.67 - 125.0 = 0 \qquad F_{DE} = 83.33\ \text{lb}$

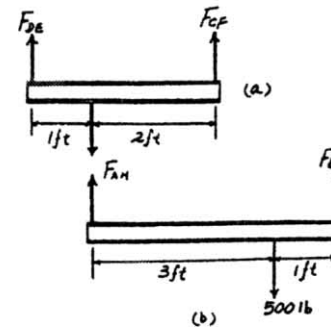

Displacement:

$$\delta_D = \frac{F_{DE}L_{DE}}{A_{DE}E} = \frac{83.33(3)(12)}{0.025(28.0)(10^6)} = 0.0042857\ \text{in.}$$

$$\delta_C = \frac{F_{CF}L_{CF}}{A_{CF}E} = \frac{41.67(3)(12)}{0.025(28.0)(10^6)} = 0.0021429\ \text{in.}$$

$$\frac{\delta'_H}{2} = \frac{0.0021429}{3}; \qquad \delta'_H = 0.0014286\ \text{in.}$$

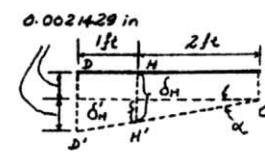

$$\delta_H = \delta'_H + \delta_C = 0.0014286 + 0.0021429 = 0.0035714\ \text{in.}$$

$$\tan\alpha = \frac{0.0021429}{36}; \qquad \alpha = 0.00341^\circ \qquad \textbf{Ans.}$$

$$\delta_{A/H} = \frac{F_{AH}L_{AH}}{A_{AH}E} = \frac{125.0(1.8)(12)}{0.025(28.0)(10^6)} = 0.0038571\ \text{in.}$$

$$\delta_A = \delta_H + \delta_{A/H} = 0.0035714 + 0.0038571 = 0.0074286\ \text{in.}$$

$$\delta_B = \frac{F_{BG}L_{BG}}{A_{BG}E} = \frac{375.0(5)(12)}{0.025(28.0)(10^6)} = 0.0321428\ \text{in.}$$

$$\tan\beta = \frac{0.0247143}{48}; \qquad \beta = 0.0295^\circ \qquad \textbf{Ans.}$$

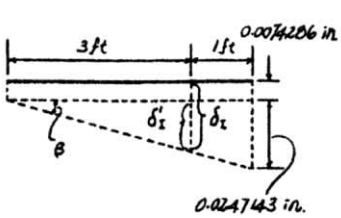

4–13. The rigid bar is supported by the pin-connected rod CB that has a cross-sectional area of 14 mm^2 and is made from 6061-T6 aluminum. Determine the vertical deflection of the bar at D when the distributed load is applied.

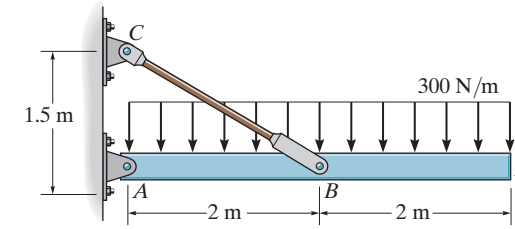

$$\circlearrowleft + \Sigma M_A = 0; \quad 1200(2) - T_{CB}(0.6)(2) = 0$$

$$T_{CB} = 2000 \text{ N}$$

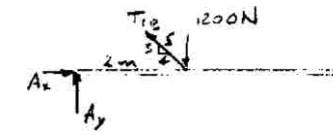

$$\delta_{B/C} = \frac{PL}{AE} = \frac{(2000)(2.5)}{14(10^{-6})(68.9)(10^9)} = 0.0051835$$

$$(2.5051835)^2 = (1.5)^2 + (2)^2 - 2(1.5)(2)\cos\theta$$

$$\theta = 90.248°$$

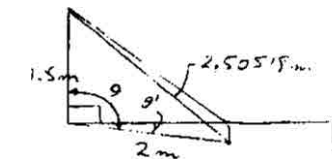

$$\theta = 90.248° - 90° = 0.2478° = 0.004324 \text{ rad}$$

$$\delta_D = \theta\, r = 0.004324(4000) = 17.3 \text{ mm}$$ **Ans.**

Ans:

$\delta_D = 17.3$ mm

4–14. The post is made of Douglas fir and has a diameter of 60 mm. If it is subjected to the load of 20 kN and the soil provides a frictional resistance that is uniformly distributed along its sides of $w = 4$ kN/m, determine the force **F** at its bottom needed for equilibrium. Also, what is the displacement of the top of the post A with respect to its bottom B? Neglect the weight of the post.

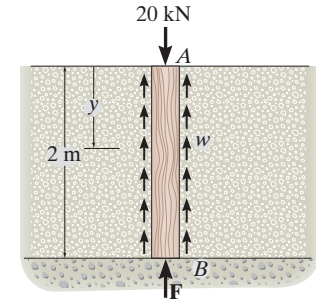

Equation of Equilibrium: For entire post [FBD (a)]

$+\uparrow \Sigma F_y = 0; \qquad F + 8.00 - 20 = 0 \qquad F = 12.0 \text{ kN}$ **Ans.**

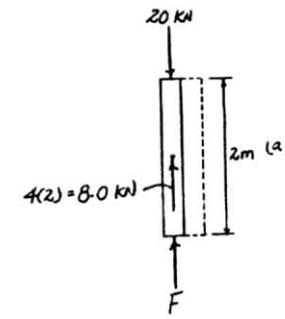

Internal Force: FBD (b)

$+\uparrow \Sigma F_y = 0; \qquad -F(y) + 4y - 20 = 0$

$$F(y) = \{4y - 20\} \text{ kN}$$

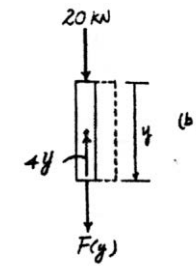

Displacement:

$$\delta_{A/B} = \int_0^L \frac{F(y)dy}{A(y)E} = \frac{1}{AE}\int_0^{2\text{ m}} (4y - 20)dy$$

$$= \frac{1}{AE}\left(2y^2 - 20y\right)\Big|_0^{2\text{ m}}$$

$$= -\frac{32.0 \text{ kN}\cdot\text{m}}{AE}$$

$$= -\frac{32.0(10^3)}{\frac{\pi}{4}(0.06^2)\,13.1\,(10^9)}$$

$$= -0.8639\left(10^{-3}\right) \text{ m}$$

$$= -0.864 \text{ mm}$$ **Ans.**

Negative sign indicates that end A moves toward end B.

Ans:
$F = 12.0$ kN, $\delta_{A/B} = -0.864$ mm

4–15. The post is made of Douglas fir and has a diameter of 60 mm. If it is subjected to the load of 20 kN and the soil provides a frictional resistance that is distributed along its length and varies linearly from $w = 0$ at $y = 0$ to $w = 3\text{ kN/m}$ at $y = 2\text{ m}$, determine the force **F** at its bottom needed for equilibrium. Also, what is the displacement of the top of the post A with respect to its bottom B? Neglect the weight of the post.

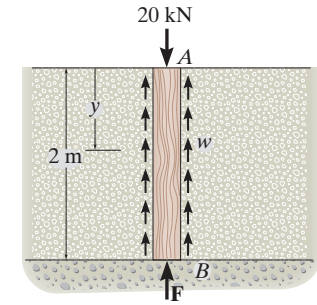

Equation of Equilibrium: For entire post [FBD (a)]

$$+\uparrow \Sigma F_y = 0; \qquad F + 3.00 - 20 = 0 \qquad F = 17.0\text{ kN}$$ **Ans.**

Internal Force: FBD (b)

$$+\uparrow \Sigma F_y = 0; \qquad -F(y) + \frac{1}{2}\left(\frac{3y}{2}\right)y - 20 = 0$$

$$F(y) = \left\{\frac{3}{4}y^2 - 20\right\}\text{ kN}$$

Displacement:

$$\delta_{A/B} = \int_0^L \frac{F(y)\,dy}{A(y)E} = \frac{1}{AE}\int_0^{2\text{ m}}\left(\frac{3}{4}y^2 - 20\right)dy$$

$$= \frac{1}{AE}\left(\frac{y^3}{4} - 20y\right)\Bigg|_0^{2\text{ m}}$$

$$= -\frac{38.0\text{ kN}\cdot\text{m}}{AE}$$

$$= -\frac{38.0(10^3)}{\frac{\pi}{4}(0.06^2)\,13.1\,(10^9)}$$

$$= -1.026\left(10^{-3}\right)\text{ m}$$

$$= -1.03\text{ mm}$$ **Ans.**

Negative sign indicates that end A moves toward end B.

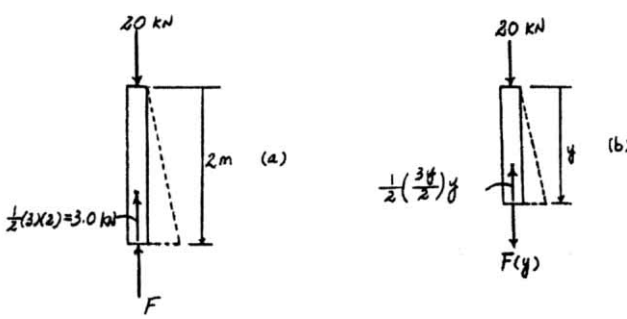

Ans:
$F = 17.0\text{ kN}$, $\delta_{A/B} = -1.03\text{ mm}$

***4–16.** The hanger consists of three 2014-T6 aluminum alloy rods, rigid beams AC and BD, and a spring. If the hook supports a load of $P = 60$ kN, determine the vertical displacement of F. Rods AB and CD each have a diameter of 10 mm, and rod EF has a diameter of 15 mm. The spring has a stiffness of $k = 100$ MN/m and is unstretched when $P = 0$.

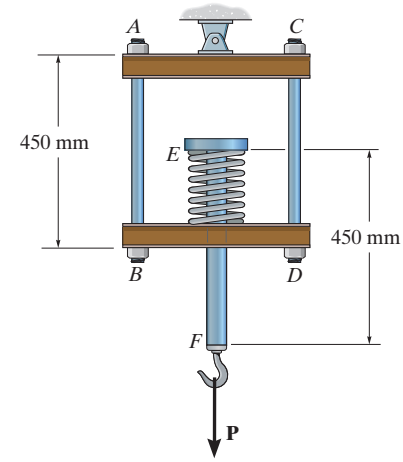

Internal Loading: The normal forces developed in rods EF, AB, and CD and the spring are shown in their respective free-body diagrams shown in Figs. a, b, and c.

Displacements: The cross-sectional areas of the rods are

$A_{EF} = \frac{\pi}{4}(0.015^2) = 56.25(10^{-6})\pi \text{ m}^2$ and

$A_{AB} = A_{CD} = \frac{\pi}{4}(0.01^2) = 25(10^{-6})\pi \text{ m}^2.$

$$\delta_{F/E} = \frac{F_{EF}L_{EF}}{A_{EF}E_{\text{al}}} = \frac{60(10^3)(450)}{56.25(10^{-6})\pi(73.1)(10^9)} = 2.0901 \text{ mm} \downarrow$$

$$\delta_{B/A} = \frac{F_{AB}L_{AB}}{A_{AB}E_{\text{al}}} = \frac{30(10^3)(450)}{25(10^{-6})\pi(73.1)(10^9)} = 2.3514 \text{ mm} \downarrow$$

The positive signs indicate that ends F and B move away from E and A, respectively. Applying the spring formula,

$$\delta_{E/B} = \frac{F_{sp}}{k} = \frac{-60}{100(10^3)} = -0.6(10^{-3}) \text{ m} = 0.6 \text{ mm} \downarrow$$

The negative sign indicates that E moves towards B. Thus, the vertical displacement of F is

$$(+\downarrow) \qquad \delta_{F/A} = \delta_{B/A} + \delta_{F/E} + \delta_{E/B}$$

$$= 2.3514 + 2.0901 + 0.6$$

$$= 5.04 \text{ mm} \downarrow \qquad \textbf{Ans.}$$

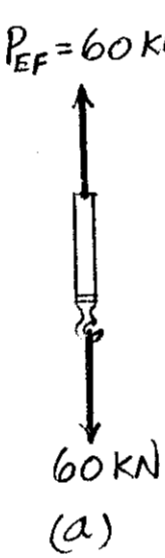

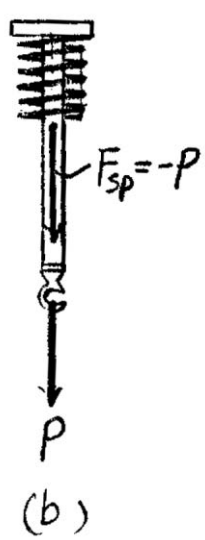

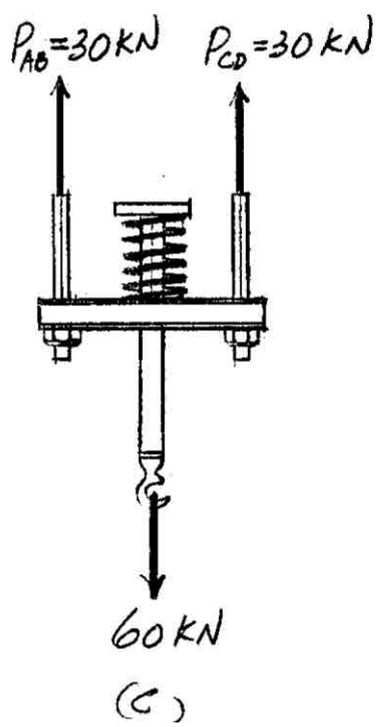

4–17. The hanger consists of three 2014-T6 aluminum alloy rods, rigid beams AC and BD, and a spring. If the vertical displacement of end F is 5 mm, determine the magnitude of the load **P**. Rods AB and CD each have a diameter of 10 mm, and rod EF has a diameter of 15 mm. The spring has a stiffness of $k = 100\ \text{MN/m}$ and is unstretched when $P = 0$.

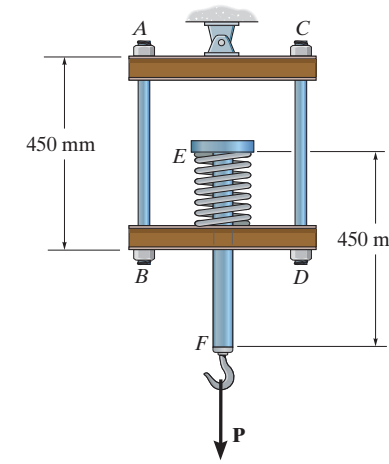

Internal Loading: The normal forces developed in rods EF, AB, and CD and the spring are shown in their respective free-body diagrams shown in Figs. a, b, and c.

Displacements: The cross-sectional areas of the rods are

$$A_{EF} = \frac{\pi}{4}(0.015^2) = 56.25(10^{-6})\pi\ \text{m}^2 \text{ and}$$

$$A_{AB} = A_{CD} = \frac{\pi}{4}(0.01^2) = 25(10^{-6})\pi\ \text{m}^2.$$

$$\delta_{F/E} = \frac{F_{EF}L_{EF}}{A_{EF}E_{\text{al}}} = \frac{P(450)}{56.25(10^{-6})\pi(73.1)(10^9)} = 34.836(10^{-6})P \downarrow$$

$$\delta_{B/A} = \frac{F_{AB}L_{AB}}{A_{AB}E_{\text{al}}} = \frac{(P/2)(450)}{25(10^{-6})\pi(73.1)(10^9)} = 39.190(10^{-6})P \downarrow$$

The positive signs indicate that ends F and B move away from E and A, respectively. Applying the spring formula with

$$k = \left[100(10^3)\frac{\text{kN}}{\text{m}}\right]\left(\frac{1000\ \text{N}}{1\ \text{kN}}\right)\left(\frac{1\ \text{m}}{1000\ \text{mm}}\right) = 100(10^3)\ \text{N/mm}.$$

$$\delta_{E/B} = \frac{F_{sp}}{k} = \frac{-P}{100(10^3)} = -10(10^{-6})P = 10(10^{-6})P \downarrow$$

The negative sign indicates that E moves towards B. Thus, the vertical displacement of F is

$$(+\downarrow) \qquad \delta_{F/A} = \delta_{B/A} + \delta_{F/E} + \delta_{E/B}$$

$$5 = 34.836(10^{-6})P + 39.190(10^{-6})P + 10(10^{-6})P$$

$$P = 59\,505.71\ \text{N} = 59.5\ \text{kN} \qquad \textbf{Ans.}$$

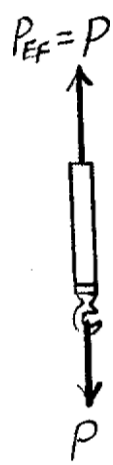

(a)

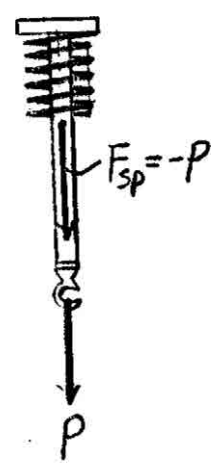

(b)

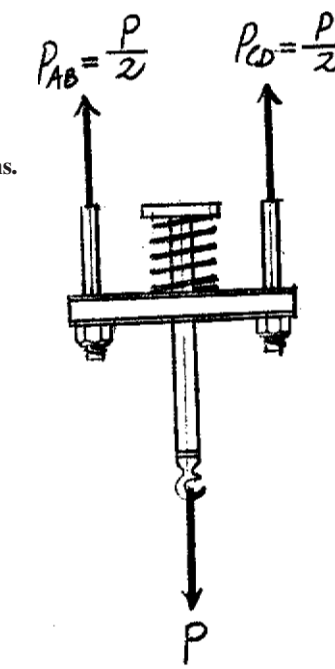

(c)

Ans:
$P = 59.5$ kN

4–18. Collar A can slide freely along the smooth vertical guide. If the supporting rod AB is made of 304 stainless steel and has a diameter of 0.75 in., determine the vertical displacement of the collar when $P = 10$ kip.

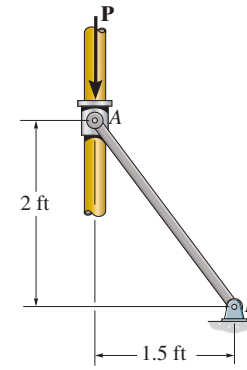

Internal Loading: The normal force developed in rod AB can be determined by considering the equilibrium of collar A with reference to its free-body diagram, Fig. *a*.

$$+\uparrow \Sigma F_y = 0; \qquad -F_{AB}\left(\frac{4}{5}\right) - 10 = 0 \quad F_{AB} = -12.5 \text{ kip}$$

Displacements: The cross-sectional area of rod AB is

$A_{AB} = \frac{\pi}{4}(0.75^2) = 0.4418 \text{ in}^2$, and the initial length of rod AB is

$L_{AB} = \sqrt{2^2 + 1.5^2} = 2.5$ ft. The axial deformation of rod AB is

$$\delta_{AB} = \frac{F_{AB} L_{AB}}{A_{AB} E_{st}} = \frac{-12.5(2.5)(12)}{0.4418(28)(10^3)} = -0.03032 \text{ in.}$$

The negative sign indicates that end A moves towards B. From the geometry shown in Fig. *b*, we obtain $\theta = \tan^{-1}\left(\frac{1.5}{2}\right) = 36.87°$. Thus,

$$(\delta_A)_V = \frac{\delta_{AB}}{\cos\theta} = \frac{0.03032}{\cos 36.87°} = 0.0379 \text{ in.} \downarrow \qquad \textbf{Ans.}$$

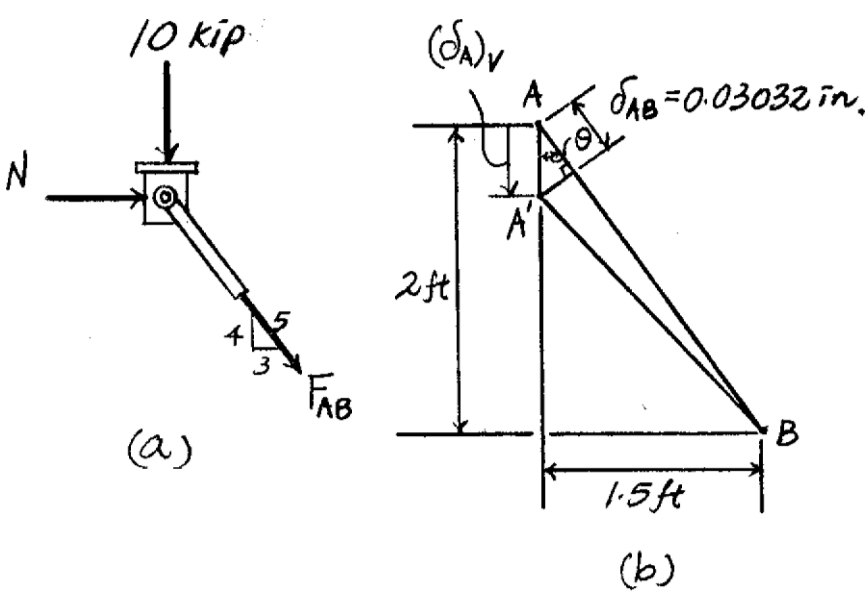

Ans:
$(\delta_A)_V = 0.0379$ in.

4–19. Collar A can slide freely along the smooth vertical guide. If the vertical displacement of the collar is 0.035 in. and the supporting 0.75 in. diameter rod AB is made of 304 stainless steel, determine the magnitude of **P**.

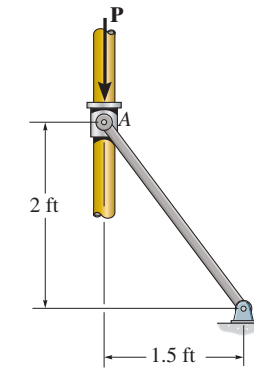

Internal Loading: The normal force developed in rod AB can be determined by considering the equilibrium of collar A with reference to its free-body diagram, Fig. a.

$$+\uparrow \Sigma F_y = 0; \quad -F_{AB}\left(\frac{4}{5}\right) - P = 0 \qquad F_{AB} = -1.25\,P$$

Displacements: The cross-sectional area of rod AB is

$A_{AB} = \frac{\pi}{4}(0.75^2) = 0.4418\ \text{in}^2$, and the initial length of rod AB is

$L_{AB} = \sqrt{2^2 + 1.5^2} = 2.5$ ft. The axial deformation of rod AB is

$$\delta_{AB} = \frac{F_{AB}L_{AB}}{A_{AB}E_{st}} = \frac{-1.25P(2.5)(12)}{0.4418(28.0)(10^3)} = -0.003032P$$

The negative sign indicates that end A moves towards B. From the geometry shown in Fig. b, we obtain $\theta = \tan^{-1}\left(\frac{1.5}{2}\right) = 36.87°$. Thus,

$$\delta_{AB} = (\delta_A)_V \cos\theta$$

$$0.003032P = 0.035 \cos 36.87°$$

$P = 9.24$ kip **Ans.**

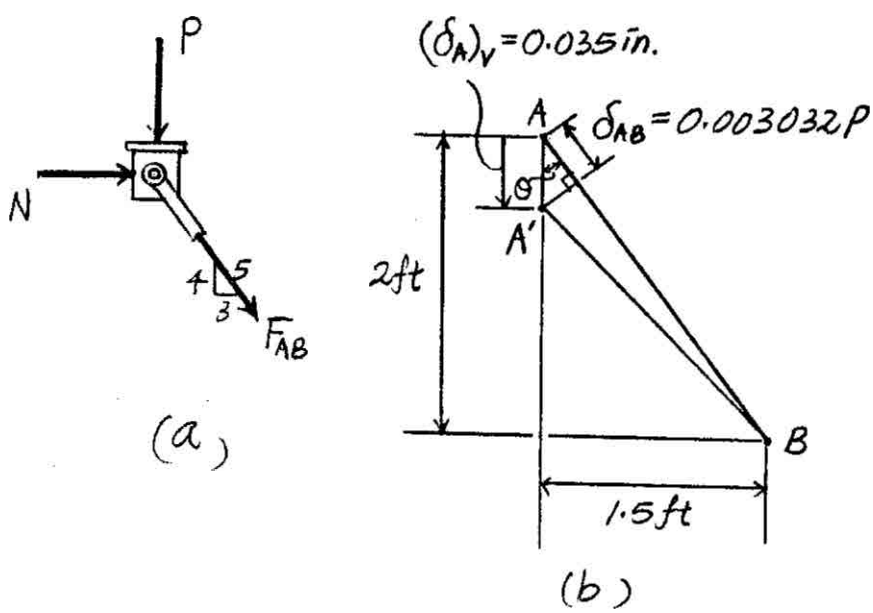

Ans:
$P = 9.24$ kip

***4–20.** The A992 steel drill shaft of an oil well extends 12000 ft into the ground. Assuming that the pipe used to drill the well is suspended freely from the derrick at A, determine the maximum average normal stress in each pipe segment and the elongation of its end D with respect to the fixed end at A. The shaft consists of three different sizes of pipe, AB, BC, and CD, each having the length, weight per unit length, and cross-sectional area indicated.

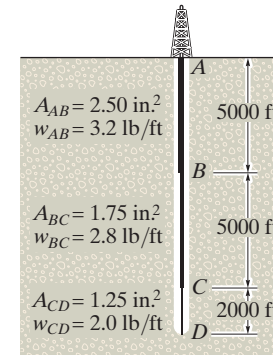

$$\sigma_A = \frac{P}{A} = \frac{3.2(5000) + 18000}{2.5} = 13.6 \text{ ksi} \qquad \textbf{Ans.}$$

$$\sigma_B = \frac{P}{A} = \frac{2.8(5000) + 4000}{1.75} = 10.3 \text{ ksi} \qquad \textbf{Ans.}$$

$$\sigma_C = \frac{P}{A} = \frac{2(2000)}{1.25} = 3.2 \text{ ksi} \qquad \textbf{Ans.}$$

$$\delta_D = \Sigma \int \frac{P(x)\,dx}{A(x)\,E} = \int_0^{2000} \frac{2x\,dx}{(1.25)(29)(10^6)} + \int_0^{5000} \frac{(2.8x + 4000)dx}{(1.75)(29)(10^6)} + \int_0^{5000} \frac{(3.2x + 18000)dx}{(2.5)(29)(10^6)}$$

$$= 2.99 \text{ ft} \qquad \textbf{Ans.}$$

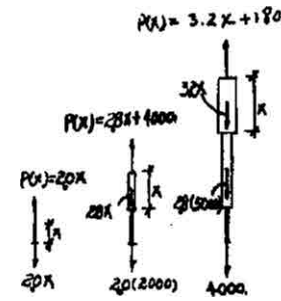

4–21. A spring-supported pipe hanger consists of two springs which are originally unstretched and have a stiffness of $k = 60$ kN/m, three 304 stainless steel rods, AB and CD, which have a diameter of 5 mm, and EF, which has a diameter of 12 mm, and a rigid beam GH. If the pipe and the fluid it carries have a total weight of 4 kN, determine the displacement of the pipe when it is attached to the support.

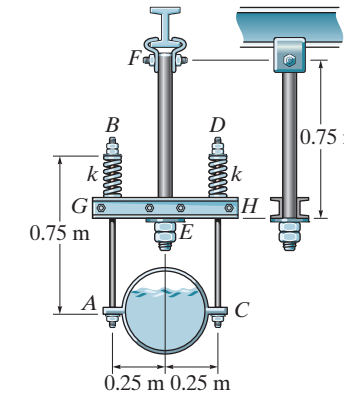

Internal Force in the Rods:

FBD (a)

$\circlearrowleft + \Sigma M_A = 0; \qquad F_{CD}(0.5) - 4(0.25) = 0 \qquad F_{CD} = 2.00 \text{ kN}$

$+\uparrow \Sigma F_y = 0; \qquad F_{AB} + 2.00 - 4 = 0 \qquad F_{AB} = 2.00 \text{ kN}$

FBD (b)

$+\uparrow \Sigma F_y = 0; \qquad F_{EF} - 2.00 - 2.00 = 0 \qquad F_{EF} = 4.00 \text{ kN}$

Displacement:

$$\delta_D = \delta_E = \frac{F_{EF}L_{EF}}{A_{EF}E} = \frac{4.00(10^3)(750)}{\frac{\pi}{4}(0.012)^2(193)(10^9)} = 0.1374 \text{ mm}$$

$$\delta_{A/B} = \delta_{C/D} = \frac{P_{CD}L_{CD}}{A_{CD}E} = \frac{2(10^3)(750)}{\frac{\pi}{4}(0.005)^2(193)(10^9)} = 0.3958 \text{ mm}$$

$$\delta_C = \delta_D + \delta_{C/D} = 0.1374 + 0.3958 = 0.5332 \text{ mm}$$

Displacement of the springs

$$\delta_{sp} = \frac{F_{sp}}{k} = \frac{2.00}{60} = 0.0333333 \text{ m} = 33.3333 \text{ mm}$$

$$\delta = \delta_C + \delta_{sp}$$

$$= 0.5332 + 33.3333 = 33.9 \text{ mm}$$ **Ans.**

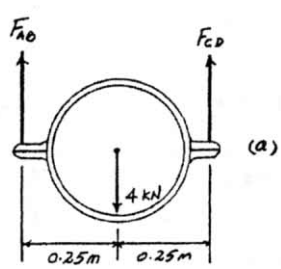

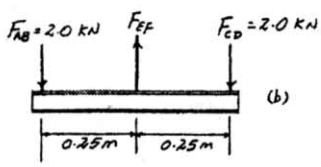

Ans:
$\delta = 33.9$ mm

4–22. A spring-supported pipe hanger consists of two springs, which are originally unstretched and have a stiffness of $k = 60$ kN/m, three 304 stainless steel rods, AB and CD, which have a diameter of 5 mm, and EF, which has a diameter of 12 mm, and a rigid beam GH. If the pipe is displaced 82 mm when it is filled with fluid, determine the weight of the fluid.

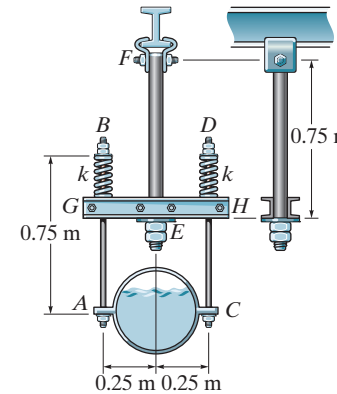

Internal Force in the Rods:

FBD (a)

$$\circlearrowleft + \Sigma M_A = 0; \qquad F_{CD}(0.5) - W(0.25) = 0 \qquad F_{CD} = \frac{W}{2}$$

$$+\uparrow \Sigma F_y = 0; \qquad F_{AB} + \frac{W}{2} - W = 0 \qquad F_{AB} = \frac{W}{2}$$

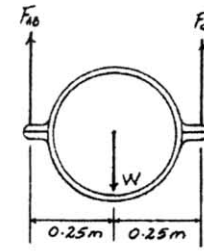

FBD (b)

$$+\uparrow \Sigma F_y = 0; \qquad F_{EF} - \frac{W}{2} - \frac{W}{2} = 0 \qquad F_{EF} = W$$

Displacement:

$$\delta_D = \delta_E = \frac{F_{EF}L_{EF}}{A_{EF}E} = \frac{W(750)}{\frac{\pi}{4}(0.012)^2(193)(10^9)}$$

$$= 34.35988(10^{-6})\,W$$

$$\delta_{A/B} = \delta_{C/D} = \frac{F_{CD}L_{CD}}{A_{CD}E} = \frac{\frac{W}{2}(750)}{\frac{\pi}{4}(0.005)^2(193)(10^9)}$$

$$= 98.95644(10^{-6})\,W$$

$$\delta_C = \delta_D + \delta_{C/D}$$

$$= 34.35988(10^{-6})\,W + 98.95644(10^{-6})\,W$$

$$= 0.133316(10^{-3})\,W$$

Displacement of the springs

$$\delta_{sp} = \frac{F_{sp}}{k} = \frac{\frac{W}{2}}{60(10^3)}(1000) = 0.008333\,W$$

$$\delta_{\text{lat}} = \delta_C + \delta_{sp}$$

$$82 = 0.133316(10^{-3})\,W + 0.008333W$$

$$W = 9685\text{ N} = 9.69\text{ kN}$$ **Ans.**

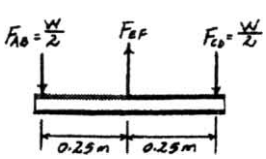

Ans:
$W = 9.69$ kN

4–23. The rod has a slight taper and length L. It is suspended from the ceiling and supports a load **P** at its end. Show that the displacement of its end due to this load is $\delta = PL/(\pi E r_2 r_1)$. Neglect the weight of the material. The modulus of elasticity is E.

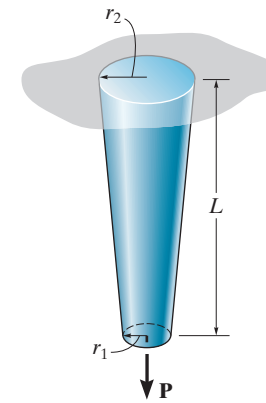

$$r(x) = r_1 + \frac{r_2 - r_1}{L}x = \frac{r_1 L + (r_2 - r_1)x}{L}$$

$$A(x) = \frac{\pi}{L^2}(r_1 L + (r_2 - r_1)x)^2$$

$$\delta = \int \frac{P dx}{A(x)E} = \frac{PL^2}{\pi E}\int_0^L \frac{dx}{[r_1 L + (r_2 - r_1)x]^2}$$

$$= -\frac{PL^2}{\pi E}\left[\frac{1}{(r_2 - r_1)(r_1 L + (r_2 - r_1)x)}\right]\Bigg|_0^L = -\frac{PL^2}{\pi E(r_2 - r_1)}\left[\frac{1}{r_1 L + (r_2 - r_1)L} - \frac{1}{r_1 L}\right]$$

$$= -\frac{PL^2}{\pi E(r_2 - r_1)}\left[\frac{1}{r_2 L} - \frac{1}{r_1 L}\right] = -\frac{PL^2}{\pi E(r_2 - r_1)}\left[\frac{r_1 - r_2}{r_2 r_1 L}\right]$$

$$= \frac{PL^2}{\pi E(r_2 - r_1)}\left[\frac{r_2 - r_1}{r_2 r_1 L}\right] = \frac{PL}{\pi E r_2 r_1}$$

QED

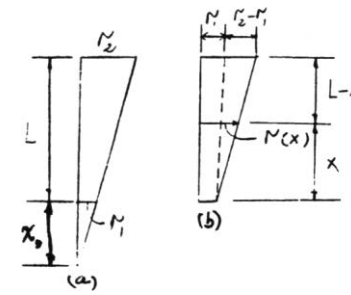

***4–24.** Determine the relative displacement of one end of the tapered plate with respect to the other end when it is subjected to an axial load P.

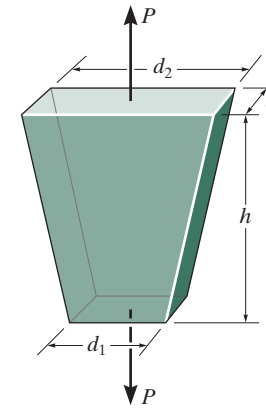

$$w = d_1 + \frac{d_2 - d_1}{h}x = \frac{d_1 h + (d_2 - d_1)x}{h}$$

$$\delta = \int \frac{P(x)\,dx}{A(x)E} = \frac{P}{E}\int_0^h \frac{dx}{\frac{[d_1 h + (d_2 - d_1)x]t}{h}}$$

$$= \frac{Ph}{E\,t}\int_0^h \frac{dx}{d_1 h + (d_2 - d_1)x}$$

$$= \frac{Ph}{E\,t\,d_1 h}\int_0^h \frac{dx}{1 + \frac{d_2 - d_1}{d_1 h}x} = \frac{Ph}{E\,t\,d_1 h}\left(\frac{d_1 h}{d_2 - d_1}\right)\left[\ln\left(1 + \frac{d_2 - d_1}{d_1 h}x\right)\right]\Bigg|_0^h$$

$$= \frac{Ph}{E\,t(d_2 - d_1)}\left[\ln\left(1 + \frac{d_2 - d_1}{d_1}\right)\right] = \frac{Ph}{E\,t(d_2 - d_1)}\left[\ln\left(\frac{d_1 + d_2 - d_1}{d_1}\right)\right]$$

$$= \frac{Ph}{E\,t(d_2 - d_1)}\left[\ln\frac{d_2}{d_1}\right] \qquad \textbf{Ans.}$$

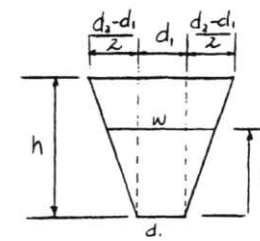

4–25. Determine the elongation of the A-36 steel member when it is subjected to an axial force of 30 kN. The member is 10 mm thick. Use the result of Prob. 4–24.

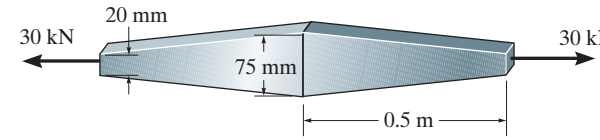

Using the result of Prob. 4–24 by substituting $d_1 = 0.02$ m, $d_2 = 0.075$ m, $t = 0.01$ m and $h = 0.5$ m.

$$\delta = 2\left[\frac{Ph}{E_{st}\,t(d_2 - d_1)} \ln \frac{d_2}{d_1}\right]$$

$$= 2\left[\frac{30(10^3)\,(0.5)}{200(10^9)(0.01)(0.075 - 0.02)} \ln\left(\frac{0.075}{0.02}\right)\right]$$

$$= 0.360(10^{-3})\text{ m} = 0.360\text{ mm}$$ **Ans.**

Ans:
$\delta = 0.360$ mm

4–26. Determine the elongation of the tapered A992 steel shaft when it is subjected to an axial force of 18 kip. *Hint:* Use the result of Prob. 4–23.

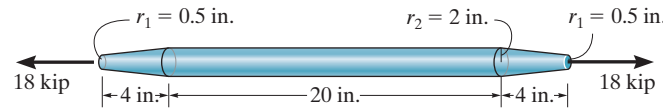

$$\delta = (2)\frac{PL_1}{\pi E r_2 r_1} + \frac{PL_2}{AE}$$

$$= \frac{(2)(18)(4)}{\pi(29)(10^3)(2)(0.5)} + \frac{18(20)}{\pi(2)^2(29)(10^3)}$$

$$= 0.00257 \text{ in.}$$ **Ans.**

Ans:
$\delta = 0.00257$ in.

4–27. The circular bar has a variable radius of $r = r_0 e^{ax}$ and is made of a material having a modulus of elasticity of E. Determine the displacement of end A when it is subjected to the axial force **P**.

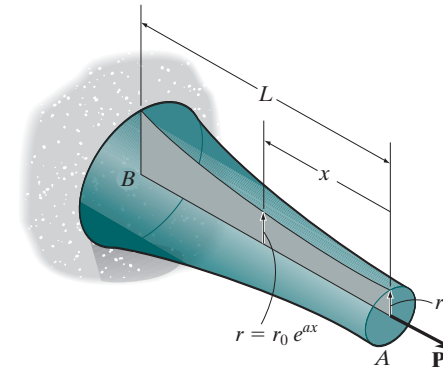

Displacements: The cross-sectional area of the bar as a function of x is $A(x) = \pi r^2 = \pi r_0{}^2 e^{2ax}$. We have

$$\delta = \int_0^L \frac{P(x)dx}{A(x)E} = \frac{P}{\pi r_0{}^2 E}\int_0^L \frac{dx}{e^{2ax}}$$

$$= \frac{P}{\pi r_0{}^2 E}\left[-\frac{1}{2ae^{2ax}}\right]\Bigg|_0^L$$

$$= \frac{P}{2a\pi r_0{}^2 E}\left(1 - e^{-2aL}\right) \qquad \textbf{Ans.}$$

Ans:
$\delta = \dfrac{P}{2a\pi r_0{}^2 E}(1 - e^{-2aL})$

***4–28.** Bone material has a stress–strain diagram that can be defined by the relation $\sigma = E[\epsilon/(1 + kE\epsilon)]$, where k and E are constants. Determine the compression within the length L of the bone, where it is assumed the cross-sectional area A of the bone is constant.

$$\sigma = \frac{P}{A}; \quad \epsilon = \frac{\delta x}{dx}$$

$$\sigma = E\left(\frac{\epsilon}{1 + kE\epsilon}\right); \qquad \frac{P}{A} = \frac{E\left(\frac{\delta x}{dx}\right)}{1 + kE\left(\frac{\delta x}{dx}\right)}$$

$$\frac{P}{A} + \frac{PkE}{A}\left(\frac{\delta x}{dx}\right) = E\left(\frac{\delta x}{dx}\right)$$

$$\frac{P}{A} = \left(E - \frac{PkE}{A}\right)\left(\frac{\delta x}{dx}\right)$$

$$\int_0^{\delta} \delta x = \int_0^{L} \frac{P\,dx}{AE\left(1 - \frac{Pk}{A}\right)}$$

$$\delta = \frac{\frac{PL}{AE}}{\left(1 - \frac{Pk}{A}\right)} = \frac{PL}{E(A - Pk)}$$ **Ans.**

4–29. The weight of the kentledge exerts an axial force of $P = 1500\,\text{kN}$ on the 300-mm diameter high-strength concrete bore pile. If the distribution of the resisting skin friction developed from the interaction between the soil and the surface of the pile is approximated as shown, and the resisting bearing force **F** is required to be zero, determine the maximum intensity $p_0\,\text{kN/m}$ for equilibrium. Also, find the corresponding elastic shortening of the pile. Neglect the weight of the pile.

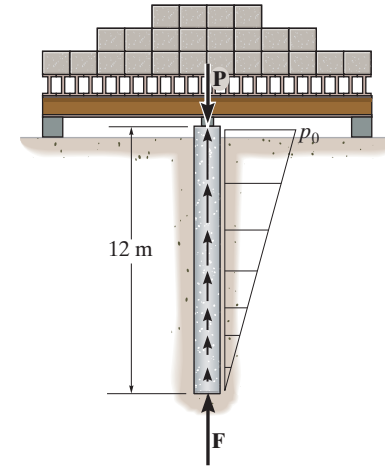

Internal Loading: By considering the equilibrium of the pile with reference to its entire free-body diagram shown in Fig. *a*. We have

$$+\uparrow \Sigma F_y = 0; \qquad \frac{1}{2}p_0(12) - 1500 = 0 \qquad p_0 = 250\,\text{kN/m} \qquad \textbf{Ans.}$$

Thus,

$$p(y) = \frac{250}{12}y = 20.83y\,\text{kN/m}$$

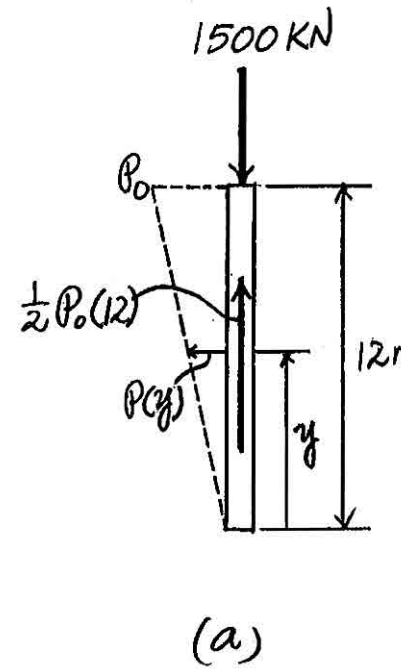

The normal force developed in the pile as a function of y can be determined by considering the equilibrium of a section of the pile shown in Fig. *b*.

$$+\uparrow \Sigma F_y = 0; \qquad \frac{1}{2}(20.83y)y - P(y) = 0 \qquad P(y) = 10.42y^2\,\text{kN}$$

Displacement: The cross-sectional area of the pile is $A = \frac{\pi}{4}(0.3^2) = 0.0225\pi\,\text{m}^2$. We have

$$\delta = \int_0^L \frac{P(y)dy}{A(y)E} = \int_0^{12\,\text{m}} \frac{10.42(10^3)y^2dy}{0.0225\pi(29.0)(10^9)}$$

$$= \int_0^{12\,\text{m}} 5.0816(10^{-6})y^2dy$$

$$= 1.6939(10^{-6})y^3\Big|_0^{12\,\text{m}}$$

$$= 2.9270(10^{-3})\text{m} = 2.93\,\text{mm} \qquad \textbf{Ans.}$$

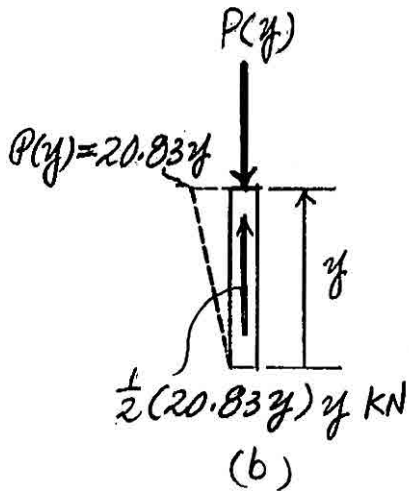

Ans:

$p_0 = 250\,\text{kN/m}$, $\delta = 2.93\,\text{mm}$

4–30. The weight of the kentledge exerts an axial force of $P = 1500$ kN on the 300-mm diameter high-strength concrete bore pile. If the distribution of the resisting skin friction developed from the interaction between the soil and the surface of the pile is approximated as shown, determine the resisting bearing force **F** for equilibrium. Take $p_0 = 180$ kN/m. Also, find the corresponding elastic shortening of the pile. Neglect the weight of the pile.

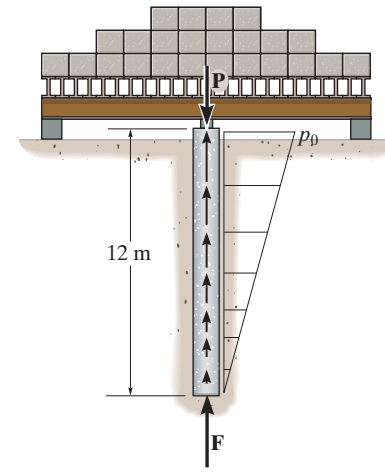

Internal Loading: By considering the equilibrium of the pile with reference to its entire free-body diagram shown in Fig. *a*. We have

$$+\uparrow \Sigma F_y = 0; \qquad F + \frac{1}{2}(180)(12) - 1500 = 0 \qquad F = 420 \text{ kN} \qquad \textbf{Ans.}$$

Also,

$$p(y) = \frac{180}{12}y = 15y \text{ kN/m}$$

The normal force developed in the pile as a function of y can be determined by considering the equilibrium of the sectional of the pile with reference to its free-body diagram shown in Fig. *b*.

$$+\uparrow \Sigma F_y = 0; \qquad \frac{1}{2}(15y)y + 420 - P(y) = 0 \qquad P(y) = (7.5y^2 + 420) \text{ kN}$$

Displacement: The cross-sectional area of the pile is $A = \frac{\pi}{4}(0.3^2) = 0.0225\pi \text{ m}^2$. We have

$$\delta = \int_0^L \frac{P(y)dy}{A(y)E} = \int_0^{12\text{ m}} \frac{(7.5y^2 + 420)(10^3)dy}{0.0225\pi(29.0)(10^9)}$$

$$= \int_0^{12\text{ m}} \left[3.6587(10^{-6})y^2 + 0.2049(10^{-3})\right]dy$$

$$= \left[1.2196(10^{-6})y^3 + 0.2049(10^{-3})y\right]_0^{12\text{ m}}$$

$$= 4.566(10^{-3}) \text{ m} = 4.57 \text{ mm} \qquad \textbf{Ans.}$$

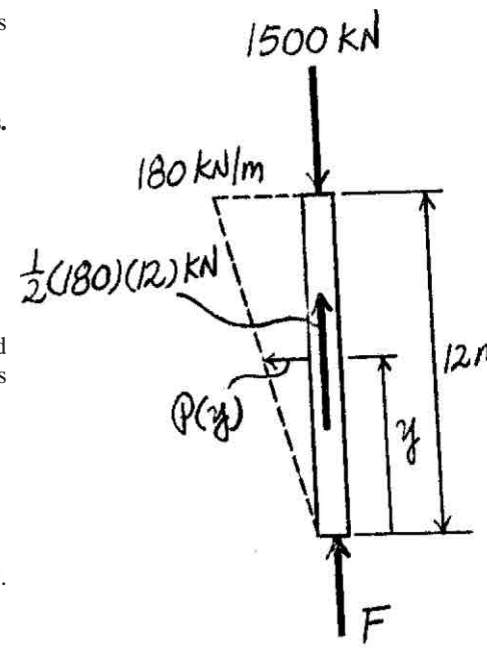

(a)

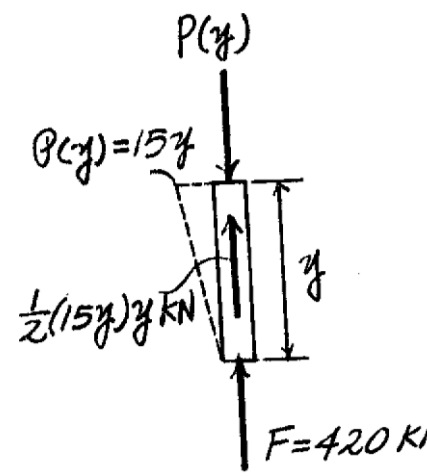

(b)

Ans:

$F = 420$ kN, $\delta = 4.57$ mm

4–31. The concrete column is reinforced using four steel reinforcing rods, each having a diameter of 18 mm. Determine the stress in the concrete and the steel if the column is subjected to an axial load of 800 kN. $E_{st} = 200$ GPa, $E_c = 25$ GPa.

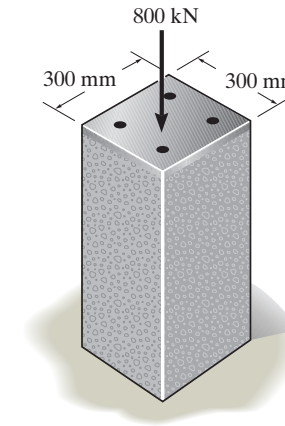

Equilibrium:

$$+\uparrow \Sigma F_y = 0; \quad P_{st} + P_{con} - 800 = 0 \qquad (1)$$

Compatibility:

$$\delta_{st} = \delta_{con}$$

$$\frac{P_{st}(L)}{4\left(\frac{\pi}{4}\right)(0.018^2)(200)(10^9)} = \frac{P_{con}(L)}{\left[0.3^2 - 4\left(\frac{\pi}{4}\right)(0.018^2)\right](25)(10^9)}$$

$$P_{st} = 0.091513\, P_{con} \qquad (2)$$

Solving Eqs. (1) and (2) yields:

$$P_{st} = 67.072 \text{ kN} \qquad P_{con} = 732.928 \text{ kN}$$

Average Normal Stress:

$$\sigma_{st} = \frac{67.072(10^3)}{4\left(\frac{\pi}{4}\right)(0.018^2)} = 65.9 \text{ MPa} \qquad \textbf{Ans.}$$

$$\sigma_{con} = \frac{732.928(10^3)}{\left[0.3^2 - 4\left(\frac{\pi}{4}\right)(0.018^2)\right]} = 8.24 \text{ MPa} \qquad \textbf{Ans.}$$

Ans:
$\sigma_{st} = 65.9$ MPa, $\sigma_{con} = 8.24$ MPa

***4–32.** The column is constructed from high-strength concrete and four A-36 steel reinforcing rods. If it is subjected to an axial force of 800 kN, determine the required diameter of each rod so that one-fourth of the load is carried by the steel and three-fourths by the concrete. $E_{st} = 200$ GPa, $E_c = 25$ GPa.

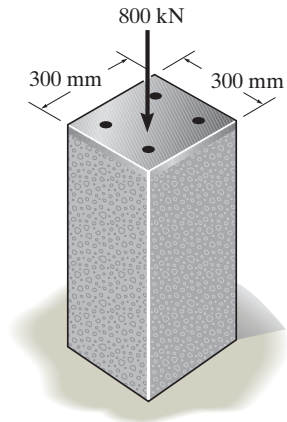

Equilibrium: Require $P_{st} = \frac{1}{4}(800) = 200$ kN and

$P_{con} = \frac{3}{4}(800) = 600$ kN.

Compatibility:

$$\delta_{con} = \delta_{st}$$

$$\frac{P_{con}L}{(0.3^2 - A_{st})(25.0)(10^9)} = \frac{P_{st}L}{A_{st}(200)(10^9)}$$

$$A_{st} = \frac{0.09P_{st}}{8P_{con} + P_{st}}$$

$$4\left[\left(\frac{\pi}{4}\right)d^2\right] = \frac{0.09(200)}{8(600) + 200}$$

$$d = 0.03385 \text{ m} = 33.9 \text{ mm}$$ **Ans.**

4–33. The steel pipe is filled with concrete and subjected to a compressive force of 80 kN. Determine the average normal stress in the concrete and the steel due to this loading. The pipe has an outer diameter of 80 mm and an inner diameter of 70 mm. $E_{st} = 200$ GPa, $E_c = 24$ GPa.

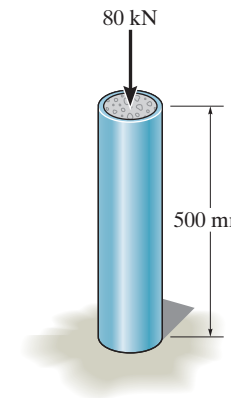

$$+\uparrow \Sigma F_y = 0; \qquad P_{st} + P_{con} - 80 = 0 \qquad (1)$$

$$\delta_{st} = \delta_{con}$$

$$\frac{P_{st}\,L}{\frac{\pi}{4}(0.08^2 - 0.07^2)\,(200)\,(10^9)} = \frac{P_{con}\,L}{\frac{\pi}{4}(0.07^2)\,(24)\,(10^9)}$$

$$P_{st} = 2.5510\,P_{con} \qquad (2)$$

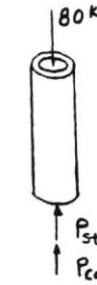

Solving Eqs. (1) and (2) yields

$$P_{st} = 57.47 \text{ kN} \qquad P_{con} = 22.53 \text{ kN}$$

$$\sigma_{st} = \frac{P_{st}}{A_{st}} = \frac{57.47\,(10^3)}{\frac{\pi}{4}\,(0.08^2 - 0.07^2)} = 48.8 \text{ MPa} \qquad \textbf{Ans.}$$

$$\sigma_{con} = \frac{P_{con}}{A_{con}} = \frac{22.53\,(10^3)}{\frac{\pi}{4}\,(0.07^2)} = 5.85 \text{ MPa} \qquad \textbf{Ans.}$$

Ans:
$\sigma_{st} = 48.8$ MPa, $\sigma_{con} = 5.85$ MPa

4–34. If column AB is made from high strength pre-cast concrete and reinforced with four $\frac{3}{4}$ in. diameter A-36 steel rods, determine the average normal stress developed in the concrete and in each rod. Set $P = 75$ kip.

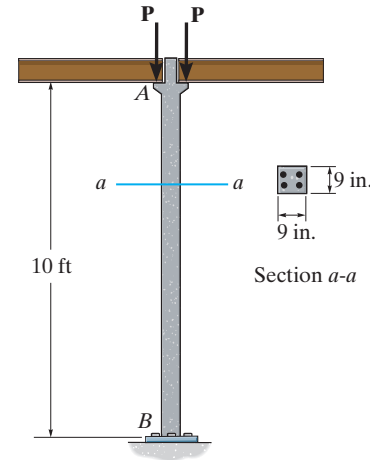

Equation of Equilibrium: Referring to the free-body diagram of the cut part of the concrete column shown in Fig. *a*,

$$+\uparrow \Sigma F_y = 0; \qquad P_{con} + 4P_{st} - 2(75) = 0 \tag{1}$$

Compatibility Equation: Since the steel bars and the concrete are firmly bonded, their deformation must be the same. Thus,

$$\delta_{con} = \delta_{st}$$

$$\frac{P_{con}(10)(12)}{\left[(9)(9) - 4\left(\frac{\pi}{4}\right)\left(\frac{3}{4}\right)^2\right](4.20)(10^3)} = \frac{P_{st}(10)(12)}{\frac{\pi}{4}\left(\frac{3}{4}\right)^2(29)(10^3)}$$

$$P_{con} = 25.974P_{st} \tag{2}$$

Solving Eqs. (1) and (2),

$$P_{st} = 5.0043 \text{ kip} \qquad P_{con} = 129.98 \text{ kip}$$

Normal Stress: Applying Eq. (1-6),

$$\sigma_{con} = \frac{P_{con}}{A_{con}} = \frac{129.98}{(9)(9) - 4\left(\frac{\pi}{4}\right)\left(\frac{3}{4}\right)^2} = 1.64 \text{ ksi} \qquad \textbf{Ans.}$$

$$\sigma_{st} = \frac{P_{st}}{A_{st}} = \frac{5.0043}{\frac{\pi}{4}\left(\frac{3}{4}\right)^2} = 11.3 \text{ ksi} \qquad \textbf{Ans.}$$

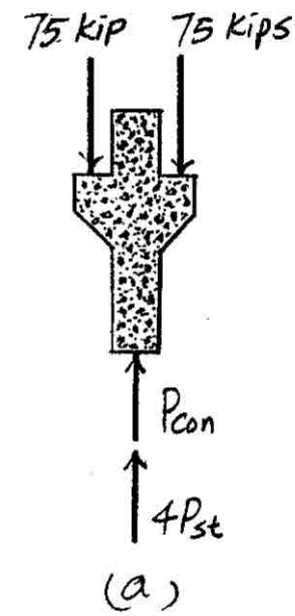

Ans:
$\sigma_{con} = 1.64$ ksi, $\sigma_{st} = 11.3$ ksi

4–35. If column AB is made from high strength pre-cast concrete and reinforced with four $\frac{3}{4}$ in. diameter A-36 steel rods, determine the maximum allowable floor loadings **P**. The allowable normal stress for the high strength concrete and the steel are $(\sigma_{allow})_{con} = 2.5$ ksi and $(\sigma_{allow})_{st} = 24$ ksi, respectively.

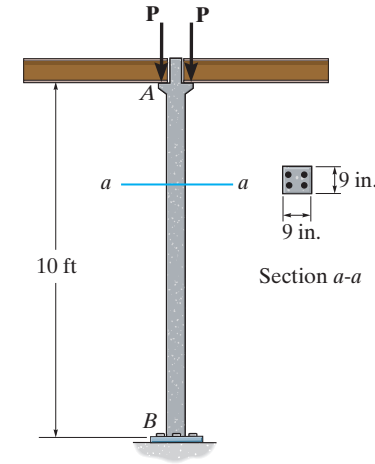

Equation of Equilibrium: Referring to the free-body diagram of the cut part of the concrete column shown in Fig. *a*,

$$+\uparrow \Sigma F_y = 0; \qquad P_{con} + 4P_{st} - 2P = 0 \qquad (1)$$

Compatibility Equation: Since the steel bars and the concrete are firmly bonded, their deformation must be the same. Thus,

$$\delta_{con} = \delta_{st}$$

$$\frac{P_{con}(10)(12)}{\left[(9)(9) - 4\left(\frac{\pi}{4}\right)\left(\frac{3}{4}\right)^2\right](4.20)(10^3)} = \frac{P_{st}(10)(12)}{\frac{\pi}{4}\left(\frac{3}{4}\right)^2(29.0)(10^3)}$$

$$P_{con} = 25.974P_{st} \qquad (2)$$

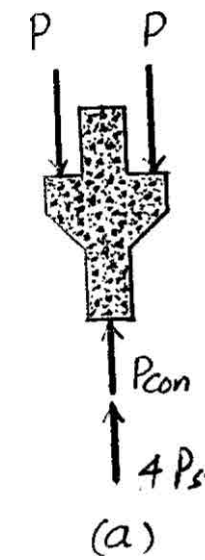

Solving Eqs. (1) and (2),

$$P_{st} = 0.06672P \qquad P_{con} = 1.7331P$$

Allowable Normal Stress:

$$(\sigma_{con})_{allow} = \frac{P_{con}}{A_{con}}; \qquad 2.5 = \frac{1.7331P}{(9)(9) - 4\left(\frac{\pi}{4}\right)\left(\frac{3}{4}\right)^2}$$

$$P = 114.29 \text{ kip} = 114 \text{ kip (controls)} \qquad \textbf{Ans.}$$

$$(\sigma_{st})_{allow} = \frac{P_{st}}{A_{st}}; \qquad 24 = \frac{0.06672P}{\frac{\pi}{4}\left(\frac{3}{4}\right)^2}$$

$$P = 158.91 \text{ kip}$$

Ans:
$P = 114$ kip

***4–36.** Determine the support reactions at the rigid supports A and C. The material has a modulus of elasticity of E.

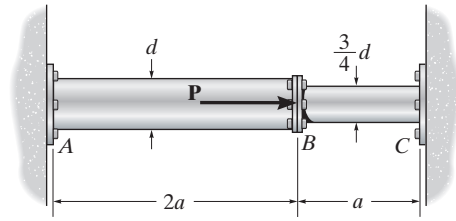

Equation of Equilibrium: Referring to the free-body diagram of the assembly shown in Fig. *a*,

$$\overset{+}{\rightarrow} \Sigma F_x = 0; \qquad P - F_A - F_C = 0 \qquad (1)$$

Compatibility Equation: Using the method of superposition, Fig. *b*,

$$(\overset{+}{\rightarrow}) \qquad \delta = \delta_P - \delta_{F_C}$$

$$0 = \frac{P(2a)}{\left(\frac{\pi}{4}d^2\right)E} - \left[\frac{F_C a}{\frac{\pi}{4}\left(\frac{3}{4}d\right)^2 E} + \frac{F_C(2a)}{\left(\frac{\pi}{4}d^2\right)E}\right]$$

$$F_C = \frac{9}{17}P \qquad \textbf{Ans.}$$

Substituting this result into Eq. (1),

$$F_A = \frac{8}{17}P \qquad \textbf{Ans.}$$

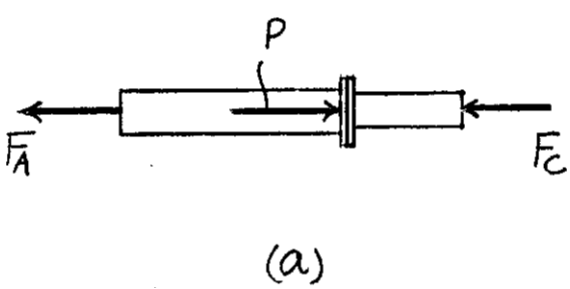

(a)

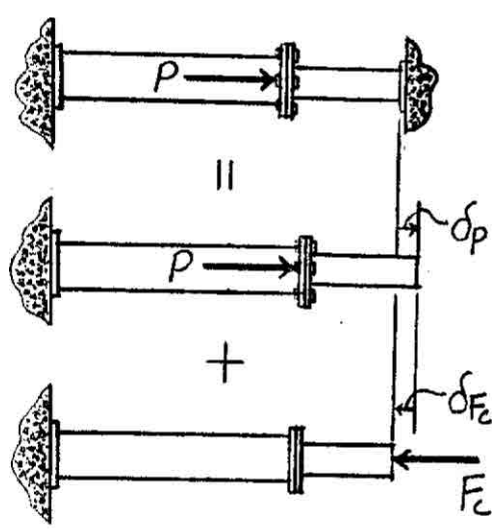

(b)

4–37. If the supports at A and C are flexible and have a stiffness k, determine the support reactions at A and C. The material has a modulus of elasticity of E.

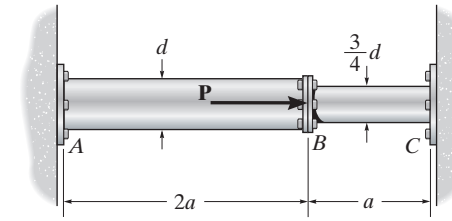

Equation of Equilibrium: Referring to the free-body diagram of the assembly shown in Fig. *a*,

$$\xrightarrow{+} \Sigma F_x = 0; \qquad P - F_A - F_C = 0 \qquad (1)$$

Compatibility Equation: Using the method of superposition, Fig. *b*,

$$(\xrightarrow{+}) \qquad \delta_C = \delta_P - \delta_{F_C}$$

$$\frac{F_C}{k} = \left[\frac{P(2a)}{\left(\frac{\pi}{4}d^2\right)E} + \frac{P}{k}\right] - \left[\frac{F_C a}{\frac{\pi}{4}\left(\frac{3}{4}d\right)^2 E} + \frac{F_C(2a)}{\left(\frac{\pi}{4}d^2\right)E} + \frac{F_C}{k}\right]$$

$$F_C = \left[\frac{9(8ka + \pi d^2 E)}{136ka + 18\pi d^2 E}\right]P \qquad \textbf{Ans.}$$

Substituting this result into Eq. (1),

$$F_A = \left(\frac{64ka + 9\pi d^2 E}{136ka + 18\pi d^2 E}\right)P \qquad \textbf{Ans.}$$

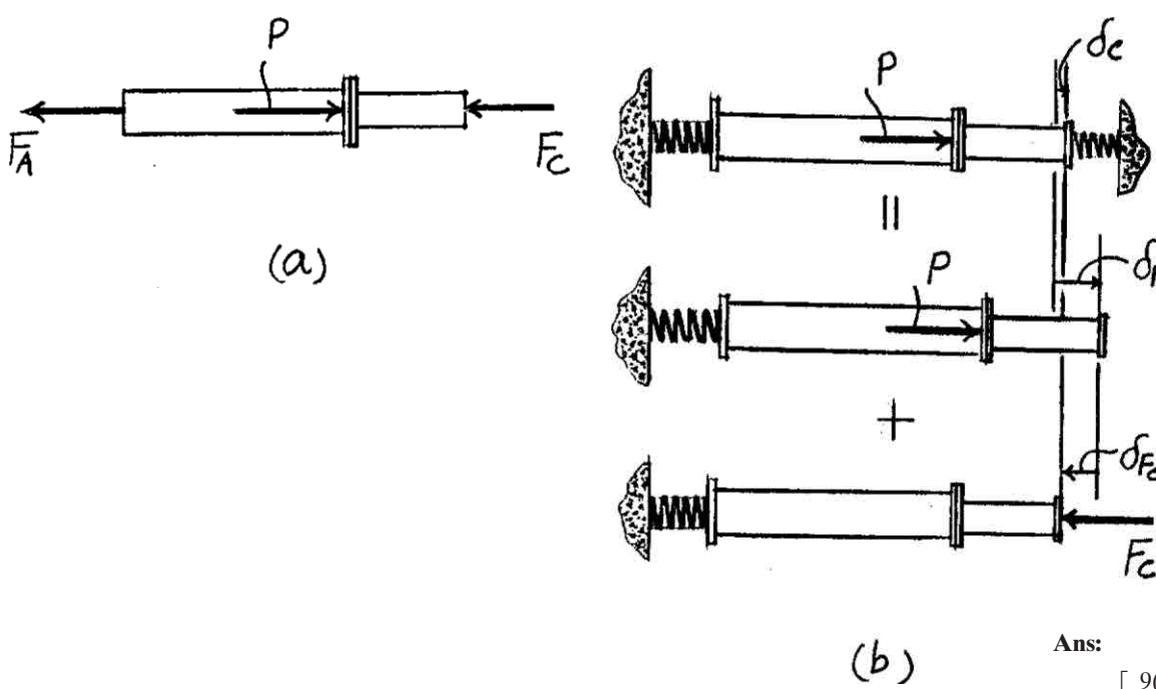

Ans:

$$F_C = \left[\frac{9(8ka + \pi d^2 E)}{136ka + 18\pi d^2 E}\right]P,$$

$$F_A = \left(\frac{64ka + 9\pi d^2 E}{136ka + 18\pi d^2 E}\right)P$$

4–38. The load of 2800 lb is to be supported by the two essentially vertical A-36 steel wires. If originally wire AB is 60 in. long and wire AC is 40 in. long, determine the force developed in each wire after the load is suspended. Each wire has a cross-sectional area of 0.02 in^2.

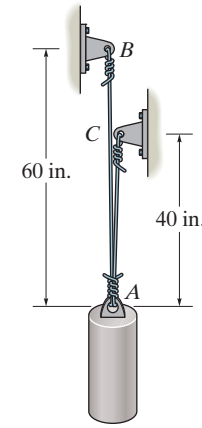

$$+\uparrow \Sigma F_y = 0; \quad T_{AB} + T_{AC} - 2800 = 0$$

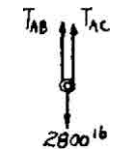

$$\delta_{AB} = \delta_{AC}$$

$$\frac{T_{AB}(60)}{AE} = \frac{T_{AC}(40)}{AE}$$

$$1.5T_{AB} = T_{AC}$$

Solving,

$T_{AB} = 1.12$ kip **Ans.**

$T_{AC} = 1.68$ kip **Ans.**

Ans:
$T_{AB} = 1.12$ kip, $T_{AC} = 1.68$ kip

4–39. The load of 2800 lb is to be supported by the two essentially vertical A-36 steel wires. If originally wire AB is 60 in. long and wire AC is 40 in. long, determine the cross-sectional area of AB if the load is to be shared equally between both wires. Wire AC has a cross-sectional area of $0.02\ \text{in}^2$.

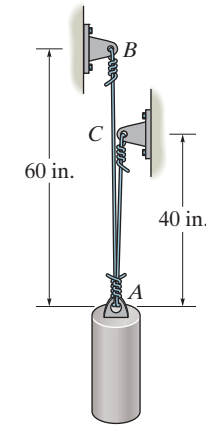

$$T_{AC} = T_{AB} = \frac{2800}{2} = 1400\ \text{lb}$$

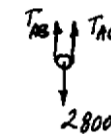

$$\delta_{AC} = \delta_{AB}$$

$$\frac{1400(40)}{(0.02)(29)(10^6)} = \frac{1400(60)}{A_{AB}(29)(10^6)}$$

$$A_{AB} = 0.03\ \text{in}^2 \qquad \textbf{Ans.}$$

Ans:
$A_{AB} = 0.03\ \text{in}^2$

***4–40.** The rigid member is held in the position shown by three A-36 steel tie rods. Each rod has an unstretched length of 0.75 m and a cross-sectional area of 125 mm^2. Determine the forces in the rods if a turnbuckle on rod EF undergoes one full turn. The lead of the screw is 1.5 mm. Neglect the size of the turnbuckle and assume that it is rigid. *Note:* The lead would cause the rod, when *unloaded*, to shorten 1.5 mm when the turnbuckle is rotated one revolution.

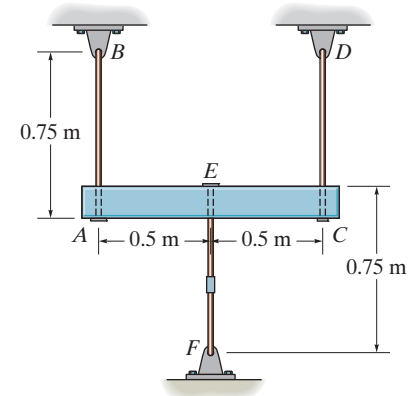

$$\circlearrowleft + \Sigma M_E = 0; \qquad -T_{AB}(0.5) + T_{CD}(0.5) = 0$$

$$T_{AB} = T_{CD} = T \qquad (1)$$

$$+\downarrow \Sigma F_y = 0; \qquad T_{EF} - 2T = 0$$

$$T_{EF} = 2T \qquad (2)$$

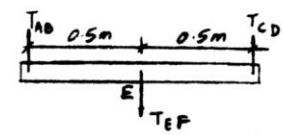

Rod EF shortens 1.5 mm causing AB (and DC) to elongate. Thus:

$$0.0015 = \delta_{A/B} + \delta_{E/F}$$

$$0.0015 = \frac{T(0.75)}{(125)(10^{-6})(200)(10^9)} + \frac{2T(0.75)}{(125)(10^{-6})(200)(10^9)}$$

$$2.25T = 37500$$

$$T = 16{,}666.67 \text{ N}$$

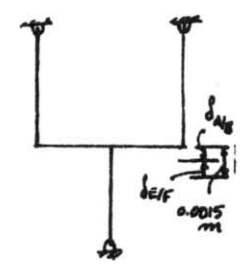

$$T_{AB} = T_{CD} = 16.7 \text{ kN} \qquad \textbf{Ans.}$$

$$T_{EF} = 33.3 \text{ kN} \qquad \textbf{Ans.}$$

4–41. The 2014-T6 aluminum rod AC is reinforced with the firmly bonded A992 steel tube BC. If the assembly fits snugly between the rigid supports so that there is no gap at C, determine the support reactions when the axial force of 400 kN is applied. The assembly is attached at D.

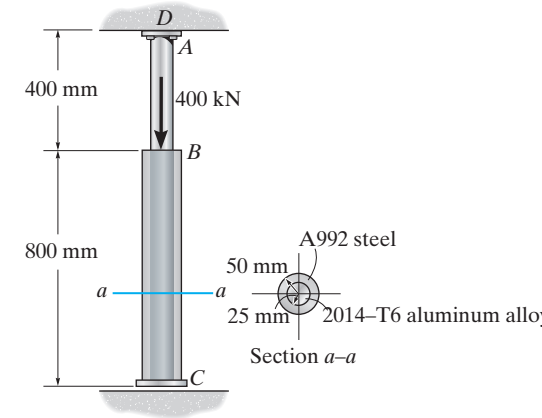

Equation of Equilibrium: Referring to the free-body diagram of the assembly shown in Fig. a,

$$+\uparrow \Sigma F_y = 0; \qquad F_D + (F_C)_{al} + (F_C)_{st} - 400(10^3) = 0 \qquad (1)$$

Compatibility Equation: Using the method of superposition, Fig. b,

$$(+\downarrow) \qquad 0 = \delta_p - \delta_{FC}$$

$$0 = +\frac{400(10^3)(400)}{\pi(0.025^2)(73.1)(10^9)} - \left[\frac{(F_C)_{al}(800)}{\pi(0.025^2)(73.1)(10^9)} + \frac{[(F_C)_{al} + (F_C)_{st}](400)}{\pi(0.025^2)(73.1)(10^9)}\right]$$

$$400(10^3) = 3(F_C)_{al} + (F_C)_{st} \qquad (2)$$

Also, since the aluminum rod and steel tube of segment BC are firmly bonded, their deformation must be the same. Thus,

$$(\delta_{BC})_{st} = (\delta_{BC})_{al}$$

$$\frac{(F_C)_{st}(800)}{\pi(0.05^2 - 0.025^2)(200)(10^9)} = \frac{(F_C)_{al}(800)}{\pi(0.025^2)(73.1)(10^9)}$$

$$(F_C)_{st} = 8.2079(F_C)_{al} \qquad (3)$$

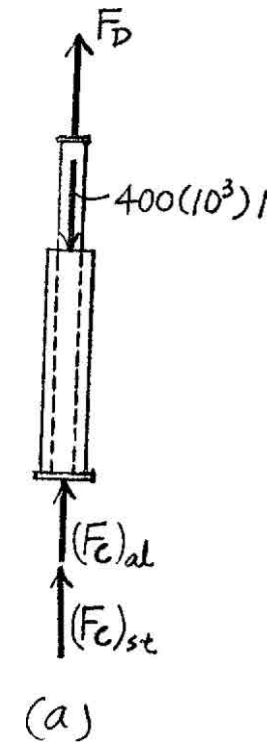

Solving Eqs. (1) and (2),

$$(F_C)_{al} = 35.689 \text{ kN} \qquad (F_C)_{st} = 292.93 \text{ kN}$$

Substituting these results into Eq. (1),

$$F_D = 71.4 \text{ kN}$$ **Ans.**

Also,

$$F_C = (F_C)_{st} + (F_C)_{al}$$

$$= 35.689 + 292.93$$

$$= 329 \text{ kN}$$ **Ans.**

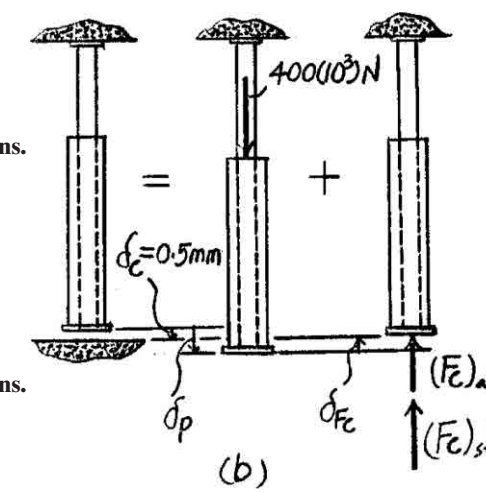

Ans:
$F_D = 71.4$ kN, $F_C = 329$ kN

4–42. The 2014-T6 aluminum rod AC is reinforced with the firmly bonded A992 steel tube BC. When no load is applied to the assembly, the gap between end C and the rigid support is 0.5 mm. Determine the support reactions when the axial force of 400 kN is applied.

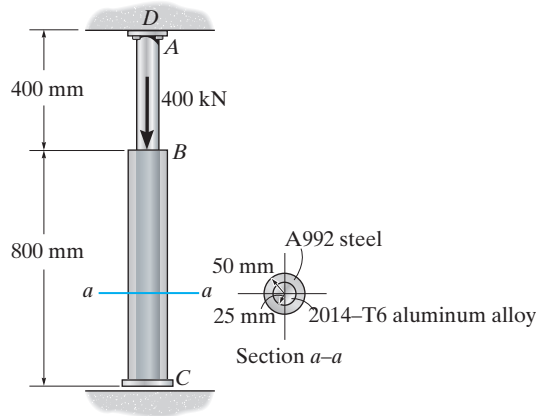

Equation of Equilibrium: Referring to the free-body diagram of the assembly shown in Fig. a,

$$+\uparrow \Sigma F_y = 0; \qquad F_D + (F_C)_{al} + (F_C)_{st} - 400(10^3) = 0 \qquad (1)$$

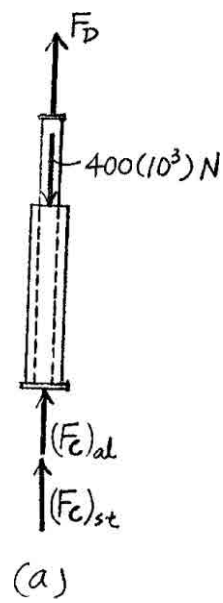

Compatibility Equation: Using the method of superposition, Fig. b,

$$(+\downarrow) \qquad \delta_C = \delta_P - \delta_{FC}$$

$$0.5 = +\frac{400(10^3)(400)}{\pi(0.025^2)(73.1)(10^9)} - \left[\frac{(F_C)_{al}(800)}{\pi(0.025^2)(73.1)(10^9)} + \frac{[(F_C)_{al} + (F_C)_{st}](400)}{\pi(0.025^2)(73.1)(10^9)}\right]$$

$$220.585(10^3) = 3(F_C)_{al} + (F_C)_{st} \qquad (2)$$

Also, since the aluminum rod and steel tube of segment BC are firmly bonded, their deformation must be the same. Thus,

$$(\delta_{BC})_{st} = (\delta_{BC})_{al}$$

$$\frac{(F_C)_{st}(800)}{\pi(0.05^2 - 0.025^2)(200)(10^9)} = \frac{(F_C)_{al}(800)}{\pi(0.025^2)(73.1)(10^9)}$$

$$(F_C)_{st} = 8.2079(F_C)_{al} \qquad (3)$$

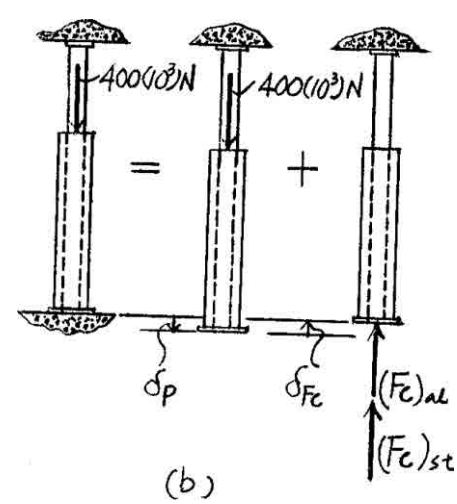

Solving Eqs. (2) and (3),

$$(F_C)_{al} = 19.681 \text{ kN} \qquad (F_C)_{st} = 161.54 \text{ kN}$$

Substituting these results into Eq. (1),

$$F_D = 218.777 \text{ kN} = 219 \text{ kN} \qquad \textbf{Ans.}$$

Also,

$$F_C = (F_C)_{al} + (F_C)_{st}$$

$$= 19.681 + 161.54$$

$$= 181 \text{ kN} \qquad \textbf{Ans.}$$

Ans:
$F_D = 219$ kN, $F_C = 181$ kN

4–43. The assembly consists of two red brass C83400 copper alloy rods AB and CD of diameter 30 mm, a stainless 304 steel alloy rod EF of diameter 40 mm, and a rigid cap G. If the supports at A, C and F are rigid, determine the average normal stress developed in rods AB, CD and EF.

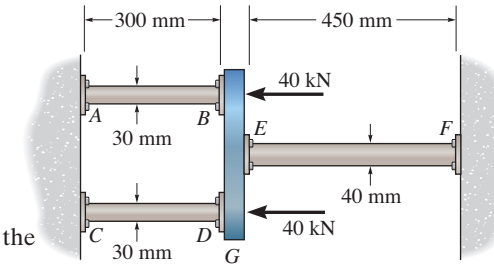

Equation of Equilibrium: Due to symmetry, $F_{AB} = F_{CD} = F$. Referring to the free-body diagram of the assembly shown in Fig. *a*,

$$\overset{+}{\rightarrow} \Sigma F_x = 0; \qquad 2F + F_{EF} - 2\left[40(10^3)\right] = 0 \qquad (1)$$

Compatibility Equation: Using the method of superposition, Fig. *b*,

$$(\overset{+}{\rightarrow}) \quad 0 = -\delta_P + \delta_{EF}$$

$$0 = -\frac{40(10^3)(300)}{\frac{\pi}{4}(0.03^2)(101)(10^9)} + \left[\frac{F_{EF}(450)}{\frac{\pi}{4}(0.04^2)(193)(10^9)} + \frac{\left(F_{EF}/2\right)(300)}{\frac{\pi}{4}(0.03^2)(101)(10^9)}\right]$$

$$F_{EF} = 42\,483.23 \text{ N}$$

Substituting this result into Eq. (1),

$$F = 18\,758.38 \text{ N}$$

Normal Stress: We have,

$$\sigma_{AB} = \sigma_{CD} = \frac{F}{A_{CD}} = \frac{18\,758.38}{\frac{\pi}{4}(0.03^2)} = 26.5 \text{ MPa} \qquad \textbf{Ans.}$$

$$\sigma_{EF} = \frac{F_{EF}}{A_{EF}} = \frac{42\,483.23}{\frac{\pi}{4}(0.04^2)} = 33.8 \text{ MPa} \qquad \textbf{Ans.}$$

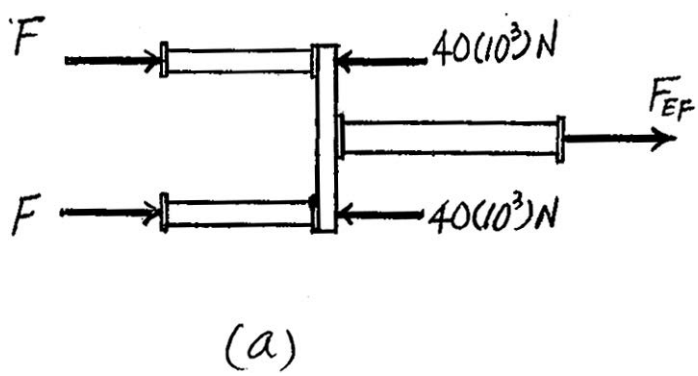

(a)

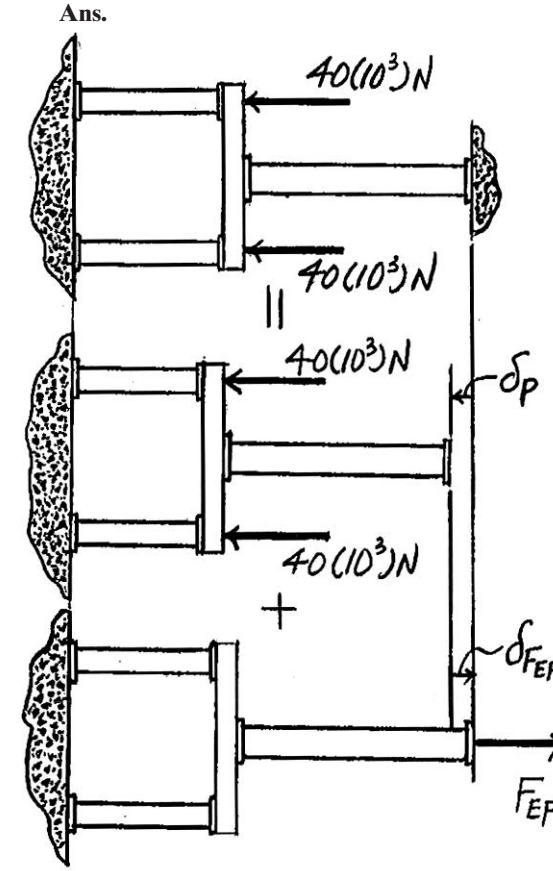

(b)

Ans:
$\sigma_{AB} = \sigma_{CD} = 26.5$ MPa, $\sigma_{EF} = 33.8$ MPa

***4–44.** The assembly consists of two red brass C83400 copper rods AB and CD having a diameter of 30 mm, a 304 stainless steel rod EF having a diameter of 40 mm, and a rigid member G. If the supports at A, C, and F each have a stiffness of $k = 200$ MN/m determine the average normal stress developed in the rods when the load is applied.

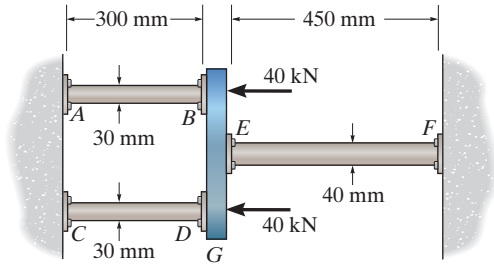

Equation of Equilibrium: Due to symmetry, $F_{AB} = F_{CD} = F$. Referring to the free-body diagram of the assembly shown in Fig. *a*,

$$\overset{+}{\rightarrow} \Sigma F_x = 0, \qquad 2F + F_{EF} - 2[40(10^3)] = 0 \qquad (1)$$

Compatibility Equation: Using the method of superposition, Fig. *b*,

$$(\overset{+}{\leftarrow}) \qquad \delta_F = \delta_P - \delta_{EF} \qquad (2)$$

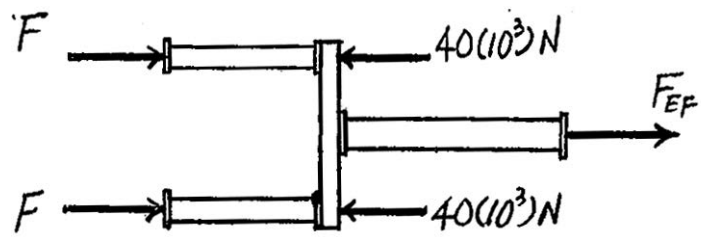

(a)

Where

$$\delta_F = \frac{F_{EF}}{k} = \frac{F_{EF}}{200\,(10^6)}(1000) = 5(10^{-6})F_{EF}\,\text{mm}$$

$$\delta_P = \frac{40(10^3)(300)}{\frac{\pi}{4}(0.03^2)(101)(10^9)} + \frac{40(10^3)}{200(10^6)}(1000) = 0.3681\ \text{mm}$$

$$\delta_{EF} = \frac{F_{EF}(450)}{\frac{\pi}{4}(0.04^2)(193)(10^9)} + \frac{(F_{EF}/2)(300)}{\frac{\pi}{4}(0.03^2)(101)(10^9)} + \frac{(F_{EF}/2)}{200(10^6)}(1000)$$

$$= 6.4565(10^{-6})F_{EF}\,\text{mm}$$

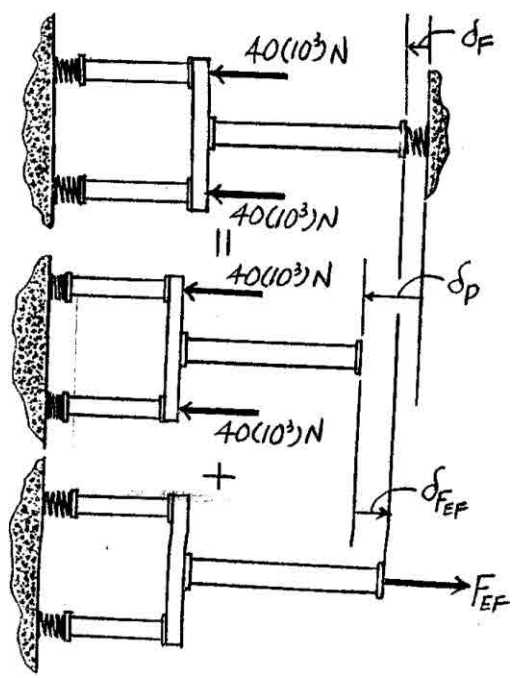

(b)

Thus,

$$5(10^{-6})F_{EF} = 0.3681 - 6.4565(10^{-6})F_{EF}$$

$$F_{EF} = 32.13\ \text{kN}$$

From Eq. (1),

$$2F + 32.13(10^3) - 2[40(10^3)] = 0$$

$$F = 23.93\ \text{kN}$$

$$\sigma_{AB} = \sigma_{CD} = \frac{F}{A_{CD}} = \frac{23.93(10^3)}{\frac{\pi}{4}(0.03^2)} = 33.9\ \text{MPa} \qquad \textbf{Ans.}$$

$$\sigma_{EF} = \frac{F_{EF}}{A_{EF}} = \frac{32.13(10^3)}{\frac{\pi}{4}(0.04^2)} = 25.6\ \text{MPa} \qquad \textbf{Ans.}$$

4–45. The bolt has a diameter of 20 mm and passes through a tube that has an inner diameter of 50 mm and an outer diameter of 60 mm. If the bolt and tube are made of A-36 steel, determine the normal stress in the tube and bolt when a force of 40 kN is applied to the bolt. Assume the end caps are rigid.

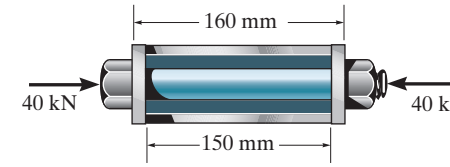

Referring to the *FBD* of left portion of the cut assembly, Fig. *a*

$$\xrightarrow{+} \Sigma F_x = 0; \qquad 40(10^3) - F_b - F_t = 0 \qquad (1)$$

Here, it is required that the bolt and the tube have the same deformation. Thus

$$\delta_t = \delta_b$$

$$\frac{F_t(150)}{\frac{\pi}{4}(0.06^2 - 0.05^2)\cancel{[200(10^9)]}} = \frac{F_b(160)}{\frac{\pi}{4}(0.02^2)\cancel{[200(10^9)]}}$$

$$F_t = 2.9333\, F_b \qquad (2)$$

Solving Eqs (1) and (2) yields

$$F_b = 10.17\,(10^3)\text{ N} \qquad F_t = 29.83\,(10^3)\text{ N}$$

Thus,

$$\sigma_b = \frac{F_b}{A_b} = \frac{10.17(10^3)}{\frac{\pi}{4}(0.02^2)} = 32.4\text{ MPa} \qquad \textbf{Ans.}$$

$$\sigma_t = \frac{F_t}{A_t} = \frac{29.83\,(10^3)}{\frac{\pi}{4}(0.06^2 - 0.05^2)} = 34.5\text{ MPa} \qquad \textbf{Ans.}$$

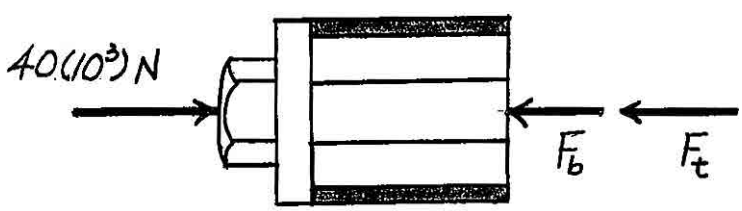

(a)

Ans:

$\sigma_b = 32.4$ MPa, $\sigma_t = 34.5$ MPa

4–46. If the gap between C and the rigid wall at D is initially 0.15 mm, determine the support reactions at A and D when the force $\mathbf{P} = 200$ kN is applied. The assembly is made of A-36 steel.

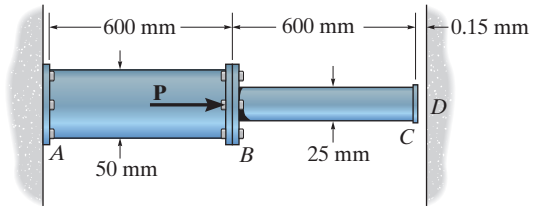

Equation of Equilibrium: Referring to the free-body diagram of the assembly shown in Fig. *a*,

$$\xrightarrow{+} \Sigma F_x = 0; \qquad 200(10^3) - F_D - F_A = 0 \qquad (1)$$

Compatibility Equation: Using the method of superposition, Fig. *b*,

$$(\xrightarrow{+}) \qquad \delta = \delta_P - \delta_{F_D}$$

$$0.15 = \frac{200(10^3)(600)}{\frac{\pi}{4}(0.05^2)(200)(10^9)} - \left[\frac{F_D(600)}{\frac{\pi}{4}(0.05^2)(200)(10^9)} + \frac{F_D(600)}{\frac{\pi}{4}(0.025^2)(200)(10^9)}\right]$$

$$F_D = 20\,365.05 \text{ N} = 20.4 \text{ kN} \qquad \textbf{Ans.}$$

Substituting this result into Eq. (1),

$$F_A = 179\,634.95 \text{ N} = 180 \text{ kN} \qquad \textbf{Ans.}$$

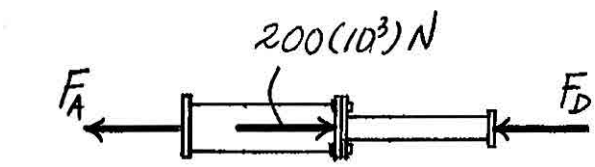

(a)

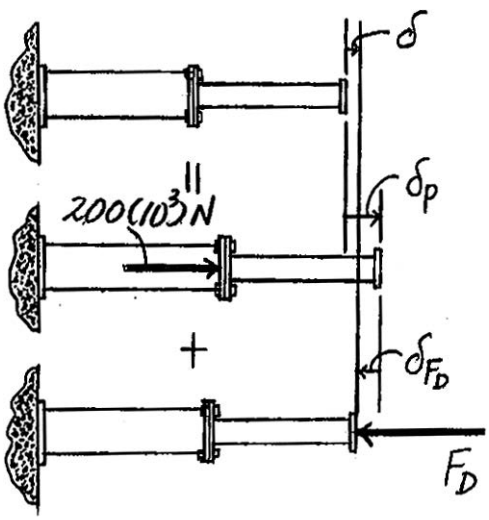

(b)

Ans:

$F_D = 20.4$ kN, $F_A = 180$ kN

4–47. The support consists of a solid red brass C83400 copper post surrounded by a 304 stainless steel tube. Before the load is applied the gap between these two parts is 1 mm. Given the dimensions shown, determine the greatest axial load that can be applied to the rigid cap A without causing yielding of any one of the materials.

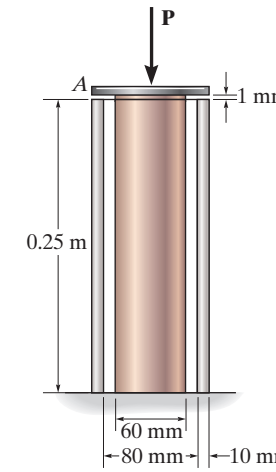

Require,

$$\delta_{st} = \delta_{br} + 0.001$$

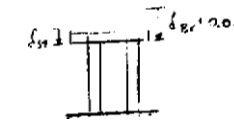

$$\frac{F_{st}(0.25)}{\pi[(0.05)^2 - (0.04)^2]193(10^9)} = \frac{F_{br}(0.25)}{\pi(0.03)^2(101)(10^9)} + 0.001$$

$$0.45813\, F_{st} = 0.87544\, F_{br} + 10^6 \qquad (1)$$

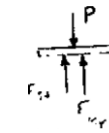

$$+\uparrow \Sigma F_y = 0; \qquad F_{st} + F_{br} - P = 0 \qquad (2)$$

Assume brass yields, then

$$(F_{br})_{max} = \sigma_\gamma A_{br} = 70(10^6)(\pi)(0.03)^2 = 197\,920.3 \text{ N}$$

$$(\epsilon_\gamma)_{br} = \sigma_\gamma / E = \frac{70.0(10^6)}{101(10^9)} = 0.6931(10^{-3}) \text{ mm/mm}$$

$$\delta_{br} = (\varepsilon_\gamma)_{br} L = 0.6931(10^{-3})(0.25) = 0.1733 \text{ mm} < 1 \text{ mm}$$

Thus only the brass is loaded.

$$P = F_{br} = 198 \text{ kN} \qquad \textbf{Ans.}$$

Ans:
$P = 198$ kN

***4–48.** The specimen represents a filament-reinforced matrix system made from plastic (matrix) and glass (fiber). If there are n fibers, each having a cross-sectional area of A_f and modulus of E_f, embedded in a matrix having a cross-sectional area of A_m and modulus of E_m, determine the stress in the matrix and each fiber when the force P is imposed on the specimen.

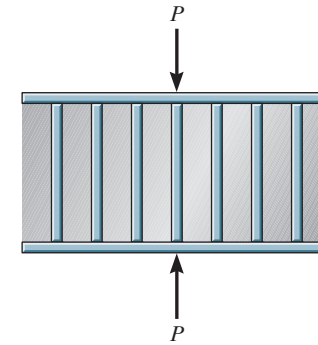

$$+\uparrow \Sigma F_y = 0; \qquad -P + P_m + P_f = 0 \tag{1}$$

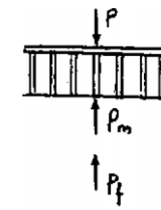

$$\delta_m = \delta_f$$

$$\frac{P_m L}{A_m E_m} = \frac{P_f L}{n A_f E_f}; \qquad P_m = \frac{A_m E_m}{n A_f E_f} P_f \tag{2}$$

Solving Eqs. (1) and (2) yields

$$P_m = \frac{A_m E_m}{n A_f E_f + A_m E_m} P; \qquad P_f = \frac{n A_f E_f}{n A_f E_f + A_m E_m} P$$

Normal stress:

$$\sigma_m = \frac{P_m}{A_m} = \frac{\left(\dfrac{A_m E_m}{n A_f E_f + A_m E_m} - P\right)}{A_m} = \frac{E_m}{n A_f E_f + A_m E_m} P \qquad \textbf{Ans.}$$

$$\sigma_f = \frac{P_f}{n A_f} = \frac{\left(\dfrac{n A_f E_f}{n A_f E_f + A_m E_m} P\right)}{n A_f} = \frac{E_f}{n A_f E_f + A_m E_m} P \qquad \textbf{Ans.}$$

4–49. The tapered member is fixed connected at its ends A and B and is subjected to a load $P = 7$ kip at $x = 30$ in. Determine the reactions at the supports. The material is 2 in. thick and is made from 2014-T6 aluminum.

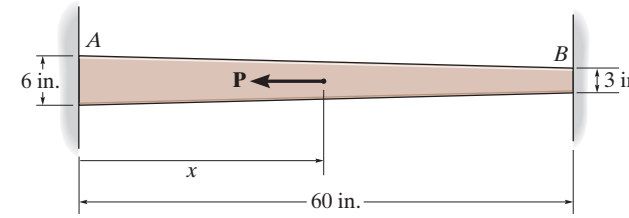

$$\frac{y}{120 - x} = \frac{1.5}{60}$$

$$y = 3 - 0.025\,x$$

$$\xrightarrow{+} \Sigma F_x = 0; \qquad F_A + F_B - 7 = 0 \qquad (1)$$

$$\delta_{A/B} = 0$$

$$-\int_0^{30} \frac{F_A\,dx}{2(3 - 0.025\,x)(2)(E)} + \int_{30}^{60} \frac{F_B dx}{2(3 - 0.025\,x)(2)(E)} = 0$$

$$-F_A \int_0^{30} \frac{dx}{(3 - 0.025\,x)} + F_B \int_{30}^{60} \frac{dx}{(3 - 0.025x)} = 0$$

$$40\,F_A \ln(3 - 0.025\,x)\big|_0^{30} - 40\,F_B \ln(3 - 0.025x)\big|_{30}^{60} = 0$$

$$-F_A(0.2876) + 0.40547\,F_B = 0$$

$$F_A = 1.40942\,F_B$$

Thus, from Eq. (1).

$$F_A = 4.09 \text{ kip} \qquad \textbf{Ans.}$$

$$F_B = 2.91 \text{ kip} \qquad \textbf{Ans.}$$

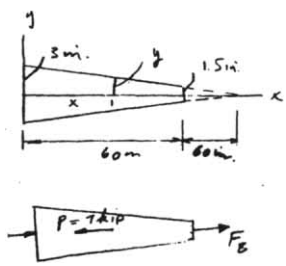

Ans:
$F_A = 4.09$ kip, $F_B = 2.91$ kip

4–50. The tapered member is fixed connected at its ends A and B and is subjected to a load **P**. Determine the greatest possible magnitude for **P** without exceeding an average normal stress of $\sigma_{\text{allow}} = 4$ ksi anywhere in the member, and determine the location x at which **P** would need to be applied. The member is 2 in. thick.

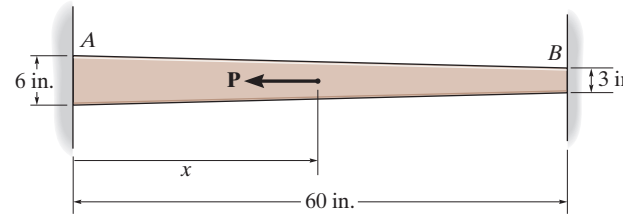

$$\frac{y}{120 - x} = \frac{1.5}{60}$$

$$y = 3 - 0.025\,x$$

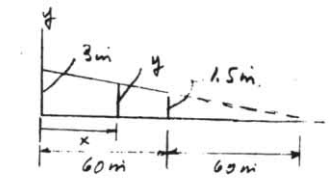

$$\xrightarrow{+} \Sigma F_x = 0; \qquad F_A + F_B - P = 0$$

$$\delta_{A/B} = 0$$

$$-\int_0^x \frac{F_A\,dx}{2(3 - 0.025\,x)(2)(E)} + \int_x^{60} \frac{F_B dx}{2(3 - 0.025\,x)(2)(E)} = 0$$

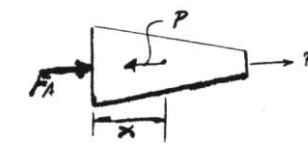

$$-F_A \int_0^x \frac{dx}{(3 - 0.025\,x)} + F_B \int_x^{60} \frac{dx}{(3 - 0.025\,x)} = 0$$

$$F_A(40)\ln(3 - 0.025\,x)\Big|_0^x - F_B(40)\ln(3 - 0.025x)\Big|_x^{60} = 0$$

$$F_A \ln\left(1 - \frac{0.025\,x}{3}\right) = -F_B \ln\left(2 - \frac{0.025x}{1.5}\right)$$

For greatest magnitude of P require,

$$4 = \frac{F_A}{2(3 - 0.025\,x)(2)}; \qquad F_A = 48 - 0.4\,x$$

$$4 = \frac{F_B}{2(3)}; \qquad F_B = 24 \text{ kip}$$

Thus,

$$(48 - 0.4\,x)\ln\left(1 - \frac{0.025\,x}{3}\right) = -24\ln\left(2 - \frac{0.025\,x}{1.5}\right)$$

Solving by trial and error,

$$x = 28.9 \text{ in.} \qquad \textbf{Ans.}$$

Therefore,

$$F_A = 36.4 \text{ kip}$$

$$P = 60.4 \text{ kip} \qquad \textbf{Ans.}$$

Ans:
$x = 28.9$ in., $P = 60.4$ kip

4–51. The rigid bar supports the uniform distributed load of 6 kip/ft. Determine the force in each cable if each cable has a cross-sectional area of 0.05 in^2, and $E = 31(10^3)$ ksi.

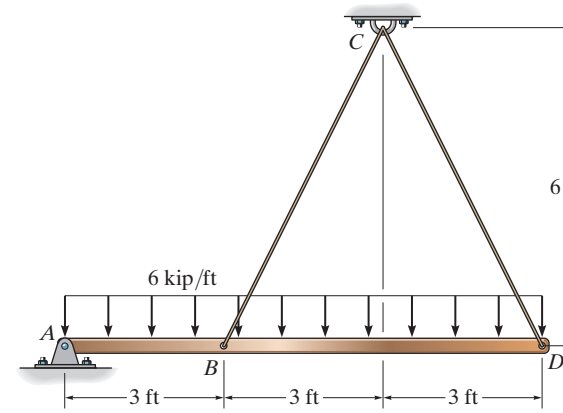

$$\circlearrowleft + \Sigma M_A = 0; \qquad T_{CB}\left(\frac{2}{\sqrt{5}}\right)(3) - 54(4.5) + T_{CD}\left(\frac{2}{\sqrt{5}}\right)9 = 0 \qquad (1)$$

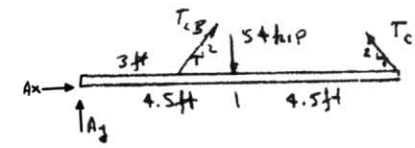

$$\theta = \tan^{-1}\frac{6}{6} = 45°$$

$$L^2_{B'C'} = (3)^2 + (8.4853)^2 - 2(3)(8.4853)\cos\theta'$$

Also,

$$L^2_{D'C'} = (9)^2 + (8.4853)^2 - 2(9)(8.4853)\cos\theta' \qquad (2)$$

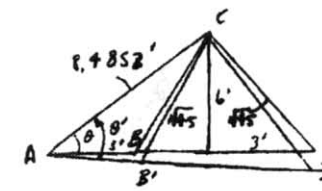

Thus, eliminating $\cos\theta'$.

$$-L^2_{B'C'}(0.019642) + 1.5910 = -L^2_{D'C'}(0.0065473) + 1.001735$$

$$L^2_{B'C'}(0.019642) = 0.0065473\, L^2_{D'C'} + 0.589256$$

$$L^2_{B'C'} = 0.333\, L^2_{D'C'} + 30$$

But,

$$L_{B'C} = \sqrt{45} + \delta_{BC'}, \qquad L_{D'C} = \sqrt{45} + \delta_{DC'}$$

Neglect squares or δ'_B since small strain occurs.

$$L^2_{D'C} = (\sqrt{45} + \delta_{BC})^2 = 45 + 2\sqrt{45}\,\delta_{BC}$$

$$L^2_{D'C} = (\sqrt{45} + \delta_{DC})^2 = 45 + 2\sqrt{45}\,\delta_{DC}$$

$$45 + 2\sqrt{45}\,\delta_{BC} = 0.333(45 + 2\sqrt{45}\,\delta_{DC}) + 30$$

$$2\sqrt{45}\,\delta_{BC} = 0.333(2\sqrt{45}\,\delta_{DC})$$

$$\delta_{DC} = 3\delta_{BC}$$

Thus,

$$\frac{T_{CD}\sqrt{45}}{AE} = 3\,\frac{T_{CB}\sqrt{45}}{AE}$$

$$T_{CD} = 3\,T_{CB}$$

From Eq. (1).

$$T_{CD} = 27.1682 \text{ kip} = 27.2 \text{ kip} \qquad \textbf{Ans.}$$

$$T_{CB} = 9.06 \text{ kip} \qquad \textbf{Ans.}$$

Ans:
$T_{CD} = 27.2$ kip, $T_{CB} = 9.06$ kip

***4–52.** The rigid bar is originally horizontal and is supported by two cables each having a cross-sectional area of $0.05\ \text{in}^2$, and $E = 31(10^3)$ ksi. Determine the slight rotation of the bar when the uniform load is supplied.

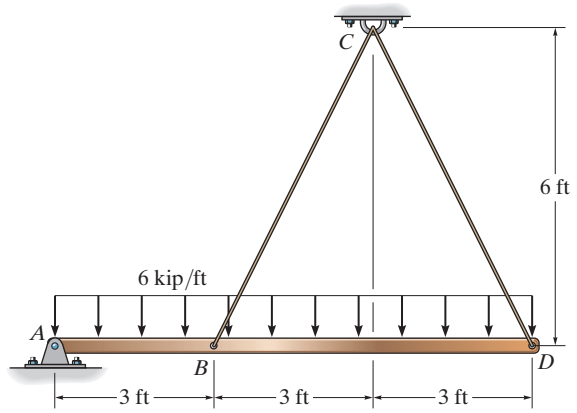

See solution of Prob. 4-51.

$$T_{CD} = 27.1682 \text{ kip}$$

$$\delta_{DC} = \frac{T_{CD}\sqrt{45}}{0.05(31)(10^3)} = \frac{27.1682\sqrt{45}}{0.05(31)(10^3)} = 0.1175806 \text{ ft}$$

Using Eq. (2) of Prob. 4-51,

$$(\sqrt{45} + 0.1175806)^2 = (9)^2 + (8.4852)^2 - 2(9)(8.4852)\cos\theta'$$

$$\theta' = 45.838°$$

Thus,

$$\Delta\theta = 45.838° - 45° = 0.838° \qquad \textbf{Ans.}$$

4–53. Each of the three A-36 steel wires has the same diameter. Determine the force in each wire needed to support the 200-kg load.

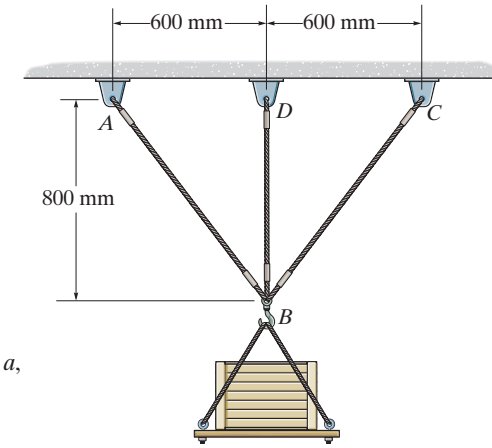

Equation of Equilibrium: Referring to the free-body diagram of joint B shown in Fig. a,

$$\xrightarrow{+} \Sigma F_x = 0, \qquad F_{BC}\left(\frac{3}{5}\right) - F_{AB}\left(\frac{3}{5}\right) = 0 \qquad F_{BC} = F_{AB} = F$$

$$+\uparrow \Sigma F_y = 0; \qquad 2\left[F\left(\frac{4}{5}\right)\right] + F_{BD} - 200(9.81) = 0$$

$$1.6F + F_{BD} = 1962 \qquad (1)$$

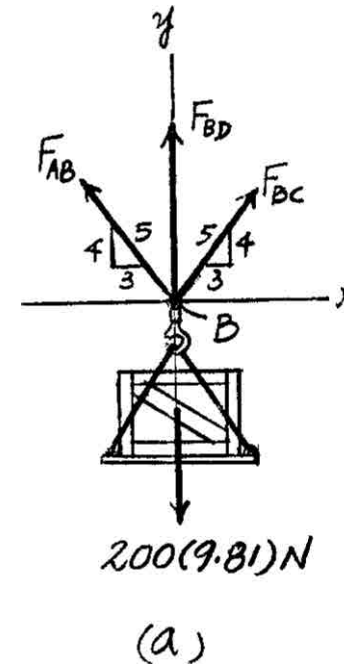

(a)

Compatibility Equation: Due to symmetry, joint B will displace vertically. Referring to the geometry shown in Fig. b, $\theta = \tan^{-1}\left(\frac{600}{800}\right) = 36.87°$. Thus,

$$\delta_{BC} = \delta_{BD} \cos 36.87°$$

$$\delta_{BC} = 0.8\delta_{BD}$$

$$\frac{F(1000)}{\frac{\pi}{4}(0.004^2)(200)(10^9)} = 0.8\left[\frac{F_{BD}(800.25)}{\frac{\pi}{4}(0.004^2)(200)(10^9)}\right]$$

$$F = 0.6402F_{BD} \qquad (2)$$

Solving Eqs. (1) and (2),

$$F_{BD} = 969 \text{ N} \qquad F_{AB} = F_{BC} = 620 \text{ N} \qquad \textbf{Ans.}$$

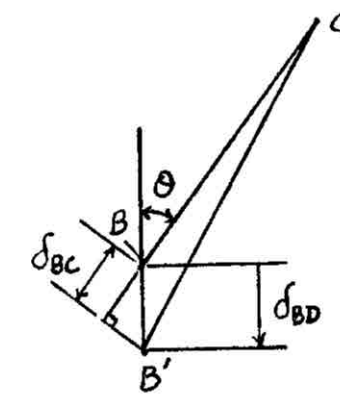

(b)

Ans:
$F_{BD} = 969$ N, $F_{AB} = F_{BC} = 620$ N

4–54. The 200-kg load is suspended from three A-36 steel wires each having a diameter of 4 mm. If wire BD has a length of 800.25 mm before the load is applied, determine the average normal stress developed in each wire.

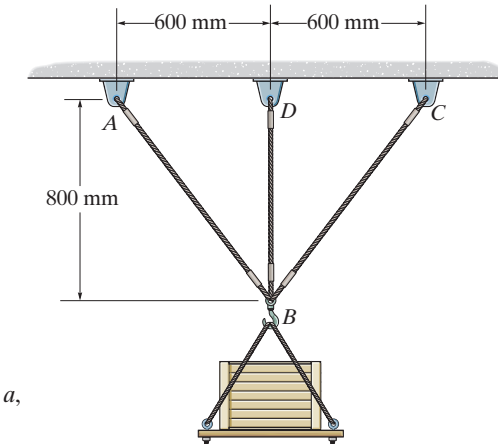

Equation of Equilibrium: Referring to the free-body diagram of joint B shown in Fig. a,

$$\overset{+}{\rightarrow} \Sigma F_x = 0; \qquad F_{BC}\left(\frac{3}{5}\right) - F_{AB}\left(\frac{3}{5}\right) = 0 \qquad F_{BC} = F_{AB} = F$$

$$+\uparrow \Sigma F_y = 0; \qquad 2\left[F\left(\frac{4}{5}\right)\right] + F_{BD} - 200(9.81) = 0$$

$$1.6F + F_{BD} = 1962 \qquad (1)$$

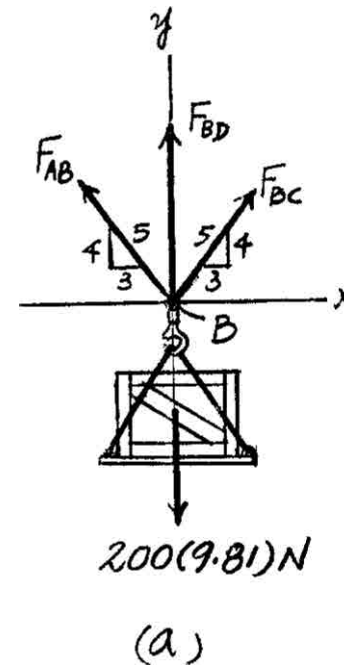

(a)

Compatibility Equation: Due to symmetry, joint B will displace vertically. Referring to the geometry shown in Fig. b, $\theta = \tan^{-1}\left(\frac{600}{800}\right) = 36.87°$. Thus,

$$\delta_{BC} = (\delta_{BD} + 0.25)\cos 36.87°$$

$$\delta_{BC} = 0.8\delta_{BD} + 0.2$$

$$\frac{F(1000)}{\frac{\pi}{4}(0.004^2)(200)(10^9)} = 0.8\left[\frac{F_{BD}(800.25)}{\frac{\pi}{4}(0.004^2)(200)(10^9)}\right] + 0.2$$

$$F = 0.6402F_{BD} + 502.65 \qquad (2)$$

Solving Eqs. (1) and (2),

$$F_{BD} = 571.93 \text{ N} \qquad F_{AB} = F_{BC} = 868.80 \text{ N}$$

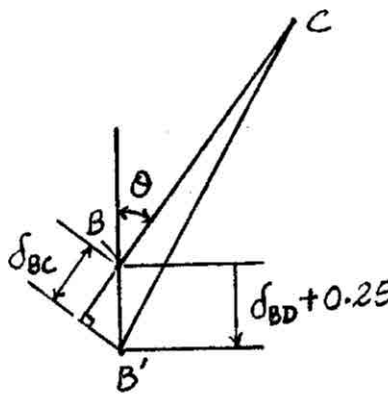

(b)

Normal Stress:

$$\sigma_{BD} = \frac{F_{BD}}{A_{BD}} = \frac{571.93}{\frac{\pi}{4}(0.004^2)} = 45.5 \text{ MPa} \qquad \textbf{Ans.}$$

$$\sigma_{AB} = J_{BC} = \frac{F}{A_{BC}} = \frac{868.80}{\frac{\pi}{4}(0.004^2)} = 69.1 \text{ MPa} \qquad \textbf{Ans.}$$

Ans:
$\sigma_{BD} = 45.5$ MPa, $\sigma_{AB} = 69.1$ MPa

4–55. The three suspender bars are made of A992 steel and have equal cross-sectional areas of 450 mm^2. Determine the average normal stress in each bar if the rigid beam is subjected to the loading shown.

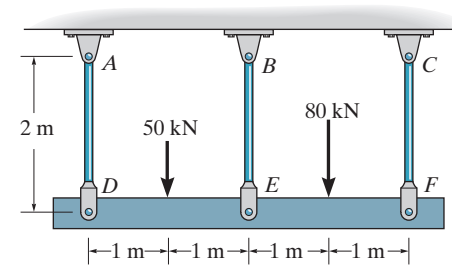

Referring to the *FBD* of the rigid beam, Fig. *a*,

$$+\uparrow \Sigma F_y = 0; \qquad F_{AD} + F_{BE} + F_{CF} - 50(10^3) - 80(10^3) = 0 \qquad (1)$$

$$\circlearrowleft + \Sigma M_D = 0; \qquad F_{BE}(2) + F_{CF}(4) - 50(10^3)(1) - 80(10^3)(3) = 0 \qquad (2)$$

Referring to the geometry shown in Fig. *b*,

$$\delta_{BE} = \delta_{AD} + \left(\frac{\delta_{CF} - \delta_{AD}}{4}\right)(2)$$

$$\delta_{BE} = \frac{1}{2}\left(\delta_{AD} + \delta_{CF}\right)$$

$$\frac{F_{BE}\cancel{L}}{\cancel{AE}} = \frac{1}{2}\left(\frac{F_{AD}\cancel{L}}{\cancel{AE}} + \frac{F_{CF}\cancel{L}}{\cancel{AE}}\right)$$

$$F_{AD} + F_{CF} = 2\,F_{BE} \qquad (3)$$

Solving Eqs. (1), (2), and (3) yields

$$F_{BE} = 43.33(10^3)\text{ N} \qquad F_{AD} = 35.83(10^3)\text{ N} \qquad F_{CF} = 50.83(10^3)\text{ N}$$

Thus,

$$\sigma_{BE} = \frac{F_{BE}}{A} = \frac{43.33(10^3)}{0.45(10^{-3})} = 96.3\text{ MPa} \qquad \textbf{Ans.}$$

$$\sigma_{AD} = \frac{F_{AD}}{A} = \frac{35.83(10^3)}{0.45(10^{-3})} = 79.6\text{ MPa} \qquad \textbf{Ans.}$$

$$\sigma_{CF} = 113\text{ MPa} \qquad \textbf{Ans.}$$

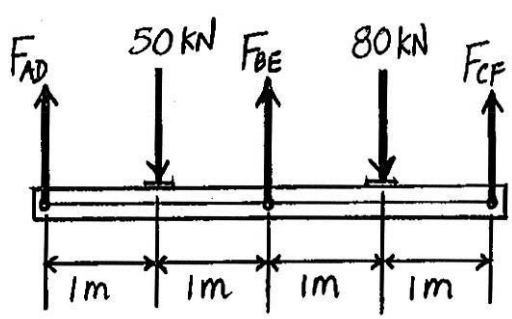

(a)

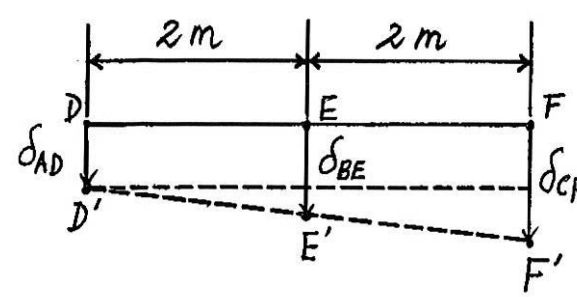

(b)

Ans:
$\sigma_{BE} = 96.3$ MPa, $\sigma_{AD} = 79.6$ MPa,
$\sigma_{CF} = 113$ MPa

***4–56.** The rigid bar supports the 800-lb load. Determine the normal stress in each A-36 steel cable if each cable has a cross-sectional area of 0.04 in^2.

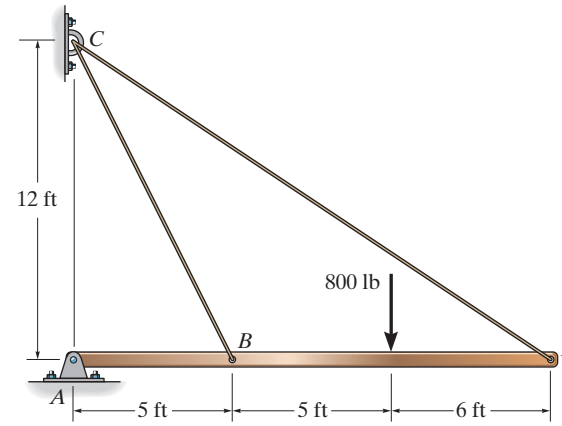

Referring to the *FBD* of the rigid bar, Fig. *a*,

$$\circlearrowleft + \Sigma M_A = 0; \qquad F_{BC}\left(\frac{12}{13}\right)(5) + F_{CD}\left(\frac{3}{5}\right)(16) - 800(10) = 0 \qquad (1)$$

The unstretched lengths of wires BC and CD are $L_{BC} = \sqrt{12^2 + 5^2} = 13$ ft and $L_{CD} = \sqrt{12^2 + 16^2} = 20$ ft. The stretches of wires BC and CD are

$$\delta_{BC} = \frac{F_{BC}\,L_{BC}}{AE} = \frac{F_{BC}\,(13)}{AE} \qquad \delta_{CD} = \frac{F_{CD}\,L_{CD}}{AE} = \frac{F_{CD}(20)}{AE}$$

Referring to the geometry shown in Fig. *b*, the vertical displacement of a point on the rigid bar is $\delta_v = \dfrac{\delta}{\cos\theta}$. For points B and D, $\cos\theta_B = \dfrac{12}{13}$ and $\cos\theta_D = \dfrac{3}{5}$. Thus, the vertical displacements of points B and D are

$$(\delta_B)_v = \frac{\delta_{BC}}{\cos\theta_B} = \frac{F_{BC}\,(13)/AE}{12/13} = \frac{169\,F_{BC}}{12AE}$$

$$(\delta_D)_v = \frac{\delta_{CD}}{\cos\theta_D} = \frac{F_{CD}\,(20)/AE}{3/5} = \frac{100\,F_{CD}}{3\,AE}$$

The similar triangles shown in Fig. *c* give

$$\frac{(\delta_B)_v}{5} = \frac{(\delta_D)_v}{16}$$

$$\frac{1}{5}\left(\frac{169\,F_{BC}}{12\,\cancel{AE}}\right) = \frac{1}{16}\left(\frac{100\,F_{CD}}{3\cancel{AE}}\right)$$

$$F_{BC} = \frac{125}{169}F_{CD} \qquad (2)$$

Solving Eqs. (1) and (2), yields

$$F_{CD} = 614.73 \text{ lb} \qquad F_{BC} = 454.69 \text{ lb}$$

Thus,

$$\sigma_{CD} = \frac{F_{CD}}{A_{CD}} = \frac{614.73}{0.04} = 15.37(10^3) \text{ psi} = 15.4 \text{ ksi} \qquad \textbf{Ans.}$$

$$\sigma_{BC} = \frac{F_{BC}}{A_{BC}} = \frac{454.69}{0.04} = 11.37(10^3) \text{ psi} = 11.4 \text{ ksi} \qquad \textbf{Ans.}$$

4–56. Continued

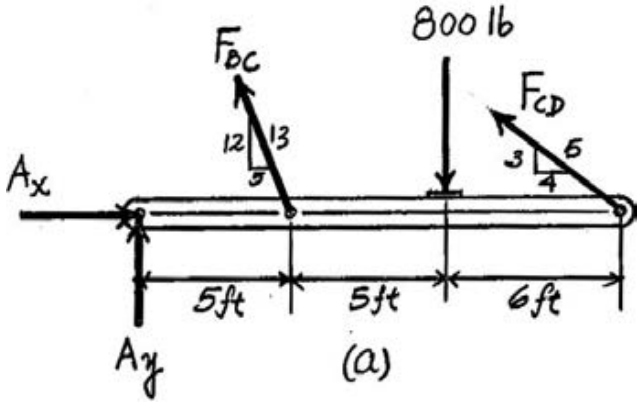

(a)

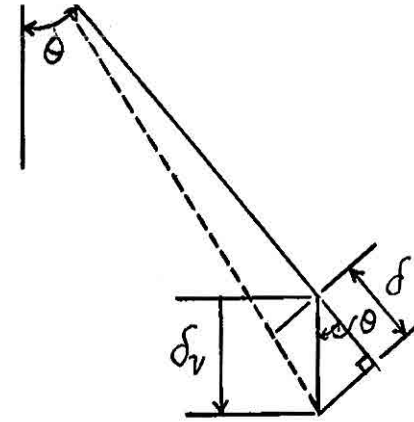

(b)

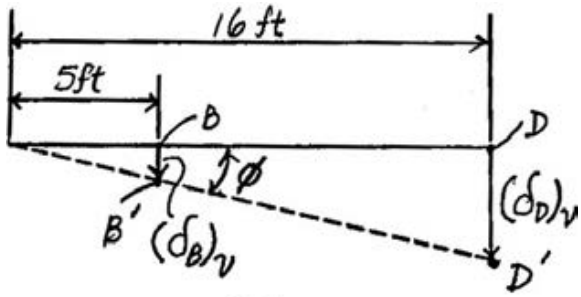

(c)

4–57. The rigid bar is originally horizontal and is supported by two A-36 steel cables each having a cross-sectional area of 0.04 in^2. Determine the rotation of the bar when the 800-lb load is applied.

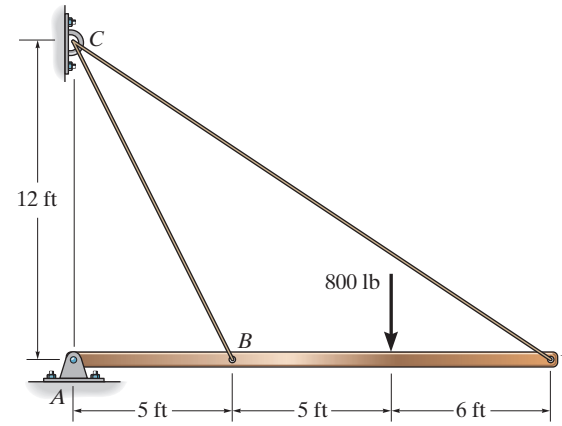

Referring to the *FBD* of the rigid bar Fig. *a*,

$$\circlearrowleft + \Sigma M_A = 0; \qquad F_{BC}\left(\frac{12}{13}\right)(5) + F_{CD}\left(\frac{3}{5}\right)(16) - 800(10) = 0 \qquad (1)$$

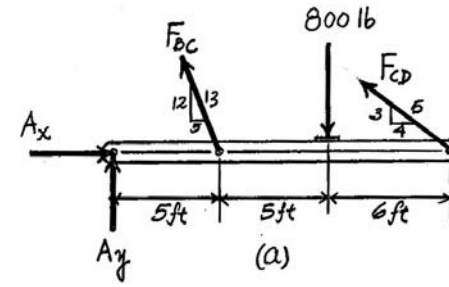

The unstretched lengths of wires *BC* and *CD* are $L_{BC} = \sqrt{12^2 + 5^2} = 13$ ft and $L_{CD} = \sqrt{12^2 + 16^2} = 20$ ft. The stretch of wires *BC* and *CD* are

$$\delta_{BC} = \frac{F_{BC}\,L_{BC}}{A\,E} = \frac{F_{BC}\,(13)}{A\,E} \qquad \delta_{CD} = \frac{F_{CD}\,L_{CD}}{A\,E} = \frac{F_{CD}(20)}{A\,E}$$

Referring to the geometry shown in Fig. *b*, the vertical displacement of a point on the rigid bar is $\delta_v = \dfrac{\delta}{\cos\theta}$. For points *B* and *D*, $\cos\theta_B = \dfrac{12}{13}$ and $\cos\theta_D = \dfrac{3}{5}$. Thus, the vertical displacements of points *B* and *D* are

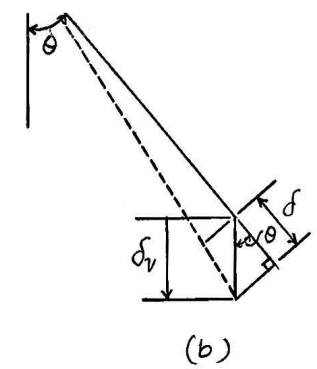

$$(\delta_B)_v = \frac{\delta_{BC}}{\cos\theta_B} = \frac{F_{BC}\,(13)/AE}{12/13} = \frac{169\,F_{BC}}{12AE}$$

$$(\delta_D)_v = \frac{\delta_{CD}}{\cos\theta_D} = \frac{F_{CD}\,(20)/AE}{3/5} = \frac{100\,F_{CD}}{3\,AE}$$

The similar triangles shown in Fig. *c* gives

$$\frac{(\delta_B)_v}{5} = \frac{(\delta_D)_v}{16}$$

$$\frac{1}{5}\left(\frac{169\,F_{BC}}{12\,AE}\right) = \frac{1}{16}\left(\frac{100\,F_{CD}}{3\,AE}\right)$$

$$F_{BC} = \frac{125}{169}F_{CD} \qquad (2)$$

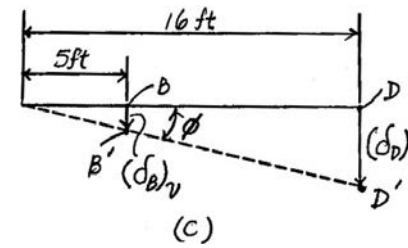

Solving Eqs (1) and (2), yields

$$F_{CD} = 614.73 \text{ lb} \qquad F_{BC} = 454.69 \text{ lb}$$

Thus,

$$(\delta_D)_v = \frac{100(614.73)}{3(0.04)\left[29.0\,(10^6)\right]} = 0.01766 \text{ ft}$$

Then

$$\theta = \left(\frac{0.01766 \text{ ft}}{16 \text{ ft}}\right)\left(\frac{180°}{\pi}\right) = 0.0633° \qquad \textbf{Ans.}$$

Ans:
$\theta = 0.0633°$

4–58. Two identical rods AB and CD each have a length L and diameter d, and are used to support the rigid beam, which is pinned at F. If a vertical force **P** is applied at the end of the beam, determine the normal stress developed in each rod. The rods are made of material that has a modulus of elasticity of E.

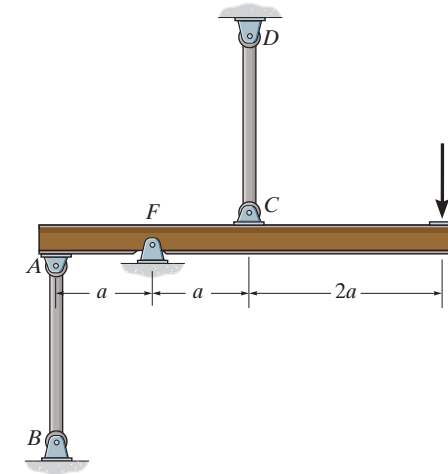

Equation of Equilibrium: Referring to the free-body diagram of the rigid beam shown in Fig. *a*,

$$\circlearrowleft + \Sigma M_F = 0; \qquad F_{AB}(a) + F_{CD}(a) - P(3a) = 0$$

$$F_{AB} + F_{CD} = 3P \qquad (1)$$

Compatibility Equation: Referring to the geometry of the deformation diagram of the rods shown in Fig. *b*,

$$\delta_{AB} = \delta_{CD}$$

$$\frac{F_{AB}L}{AE} = \frac{F_{CD}L}{AE}$$

$$F_{AB} = F_{CD} \qquad (2)$$

Solving Eqs. (1) and (2),

$$F_{AB} = F_{CD} = \frac{3}{2}P$$

Normal Stress:

$$\sigma_{AB} = \sigma_{CD} = \frac{F_{CD}}{A_{CD}} = \frac{\frac{3}{2}P}{\frac{\pi}{4}d^2} = \frac{6P}{\pi d^2} \qquad \textbf{Ans.}$$

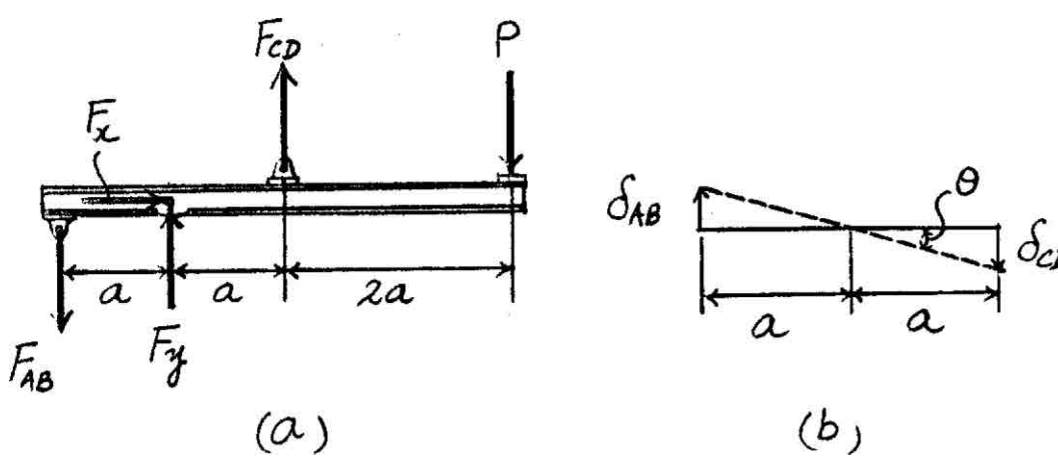

Ans:

$$\sigma_{AB} = \sigma_{CD} = \frac{6P}{\pi d^2}$$

4–59. Two identical rods AB and CD each have a length L and diameter d, and are used to support the rigid beam, which is pinned at F. If a vertical force **P** is applied at the end of the beam, determine the angle of rotation of the beam. The rods are made of material that has a modulus of elasticity of E.

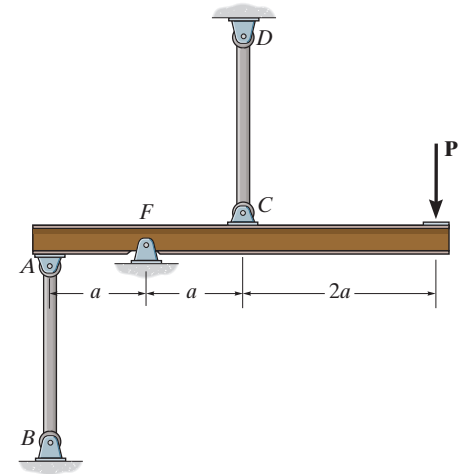

Equation of Equilibrium: Referring to the free-body diagram of the rigid beam shown in Fig. a,

$$\circlearrowleft + \Sigma M_F = 0; \qquad F_{AB}(a) + F_{CD}(a) - P(3a) = 0$$

$$F_{AB} + F_{CD} = 3P \tag{1}$$

Compatibility Equation: Referring to the geometry of the deformation diagram of the rods shown in Fig. b,

$$\delta_{AB} = \delta_{CD}$$

$$\frac{F_{AB}L}{AE} = \frac{F_{CD}L}{AE}$$

$$F_{AB} = F_{CD} \tag{2}$$

Solving Eqs. (1) and (2),

$$F_{AB} = F_{CD} = \frac{3}{2}P$$

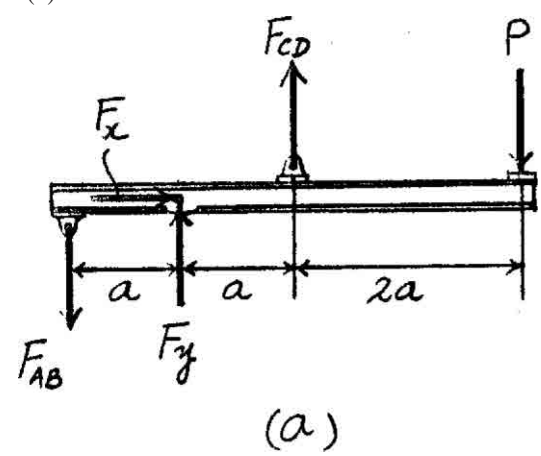

Displacement: Using these results,

$$\delta_{AB} = \frac{F_{AB}L_{AB}}{AE} = \frac{\left(\frac{3}{2}P\right)L}{\left(\frac{\pi}{4}d^2\right)E} = \frac{6PL}{\pi d^2 E}$$

Referring to Fig. b, the angle of tilt θ of the beam is

$$\theta = \frac{\delta_{AB}}{a} = \frac{6PL/\pi d^2 E}{a} = \frac{6PL}{\pi d^2 E a}$$

Ans.

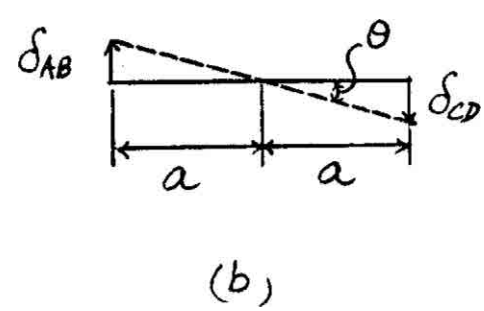

Ans:

$$\theta = \frac{6PL}{\pi d^2 E a}$$

***4–60.** The assembly consists of two posts AD and CF made of A-36 steel and having a cross-sectional area of 1000 mm^2, and a 2014-T6 aluminum post BE having a cross-sectional area of 1500 mm^2. If a central load of 400 kN is applied to the rigid cap, determine the normal stress in each post. There is a small gap of 0.1 mm between the post BE and the rigid member ABC.

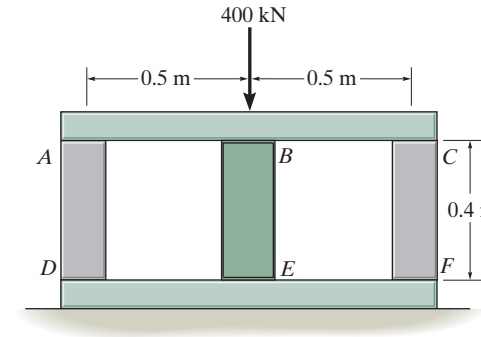

Equation of Equilibrium. Due to symmetry, $\mathbf{F}_{AD} = \mathbf{F}_{CF} = \mathbf{F}$. Referring to the *FBD* of the rigid cap, Fig. *a*,

$$+\uparrow \Sigma F_y = 0; \qquad F_{BE} + 2F - 400(10^3) = 0 \tag{1}$$

Compatibility Equation. Referring to the initial and final positions of rods AD (CF) and BE, Fig. *b*,

$$\delta = 0.1 + \delta_{BE}$$

$$\frac{F(400)}{1(10^{-3})\left[200(10^9)\right]} = 0.1 + \frac{F_{BE}\,(399.9)}{1.5(10^{-3})\left[73.1(10^9)\right]}$$

$$F = 1.8235\,F_{BE} + 50(10^3) \tag{2}$$

Solving Eqs. (1) and (2) yields

$$F_{BE} = 64.56(10^3)\text{ N} \qquad F = 167.72(10^3)\text{ N}$$

Normal Stress.

$$\sigma_{AD} = \sigma_{CF} = \frac{F}{A_{st}} = \frac{167.72(10^3)}{1(10^{-3})} = 168\text{ MPa} \qquad \textbf{Ans.}$$

$$\sigma_{BE} = \frac{F_{BE}}{A_{al}} = \frac{64.56(10^3)}{1.5(10^{-3})} = 43.0\text{ MPa} \qquad \textbf{Ans.}$$

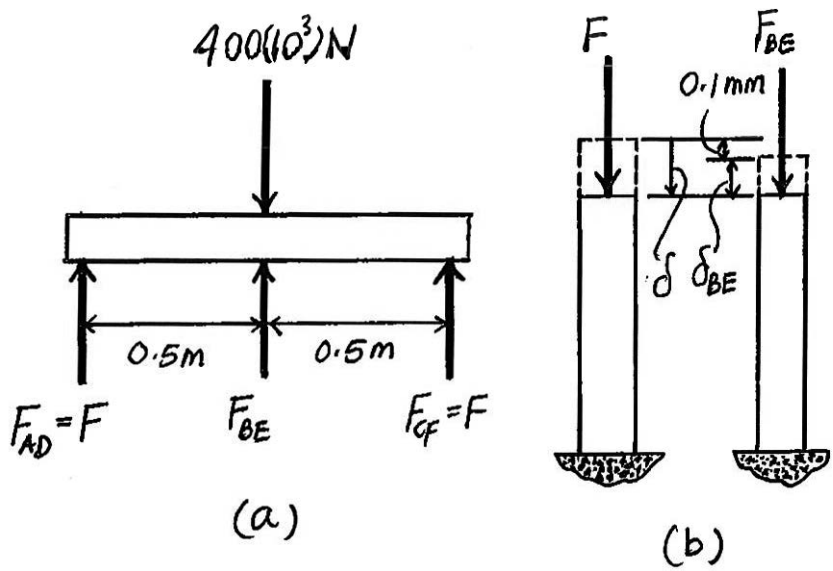

4–61. The three suspender bars are made of the same material and have equal cross-sectional areas A. Determine the average normal stress in each bar if the rigid beam ACE is subjected to the force **P**.

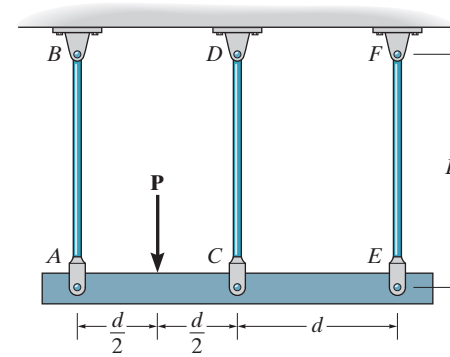

$$\circlearrowleft + \Sigma M_A = 0; \qquad F_{CD}(d) + F_{EF}(2d) - P\left(\frac{d}{2}\right) = 0$$

$$F_{CD} + 2F_{EF} = \frac{P}{2} \qquad (1)$$

$$+\uparrow \Sigma F_y = 0; \qquad F_{AB} + F_{CD} + F_{EF} - P = 0 \qquad (2)$$

$$\frac{\delta_C - \delta_E}{d} = \frac{\delta_A - \delta_E}{2d}$$

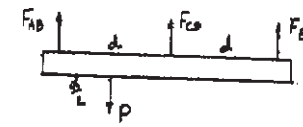

$$2\delta_C = \delta_A + \delta_E$$

$$\frac{2F_{CD}L}{AE} = \frac{F_{AB}L}{AE} + \frac{F_{EF}L}{AE}$$

$$2F_{CD} - F_{AB} - F_{EF} = 0 \qquad (3)$$

Solving Eqs. (1), (2) and (3) yields

$$F_{AB} = \frac{7P}{12} \qquad F_{CD} = \frac{P}{3} \qquad F_{EF} = \frac{P}{12}$$

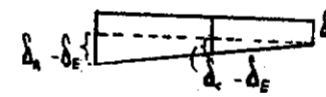

$$\sigma_{AB} = \frac{7P}{12A} \qquad \textbf{Ans.}$$

$$\sigma_{CD} = \frac{P}{3A} \qquad \textbf{Ans.}$$

$$\sigma_{EF} = \frac{P}{12A} \qquad \textbf{Ans.}$$

Ans:
$\sigma_{AB} = \dfrac{7P}{12A}, \sigma_{CD} = \dfrac{P}{3A}, \sigma_{EF} = \dfrac{P}{12A}$

4–62. If the 2-in. diameter supporting rods are made from A992 steel, determine the average normal stress developed in each rod when $P = 100$ kip.

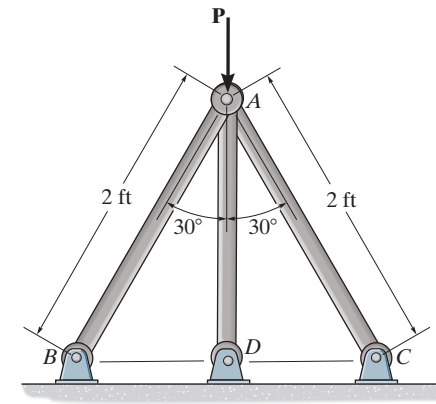

Equation of Equilibrium: Referring to the free-body diagram of joint A shown in Fig. a,

$$\overset{+}{\rightarrow} \Sigma F_x = 0; \qquad F_{AB} \sin 30° - F_{AC} \sin 30° = 0 \qquad F_{AB} = F_{AC} = F$$

$$+\uparrow \Sigma F_y = 0; \qquad 2F \cos 30° + F_{AD} - 100 = 0 \qquad (1)$$

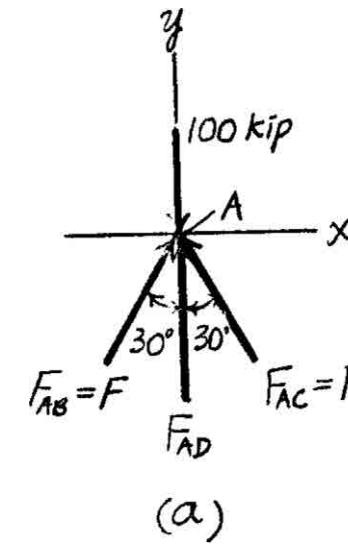

Compatibility Equation: Due to symmetry, joint A will displace vertically. Referring to the geometry shown in Fig. b, we have

$$\delta_F = \delta_{F_{AD}} \cos 30°$$

$$\frac{F(2)(12)}{AE_{st}} = \left\{ \frac{F_{AD}[2 \cos 30°(12)]}{AE_{st}} \right\} \cos 30°$$

$$F = 0.75 F_{AD} \qquad (2)$$

Solving Eqs. (1) and (2),

$$F_{AD} = 43.50 \text{ kip} \qquad F = 32.62 \text{ kip}$$

Normal Stress:

$$\sigma_{AB} = \sigma_{AC} = \frac{F}{A_{AC}} = \frac{32.62}{\frac{\pi}{4}(2^2)} = 10.4 \text{ ksi} \qquad \textbf{Ans.}$$

$$\sigma_{AD} = \frac{F_{AD}}{A_{AD}} = \frac{43.50}{\frac{\pi}{4}(2^2)} = 13.8 \text{ ksi} \qquad \textbf{Ans.}$$

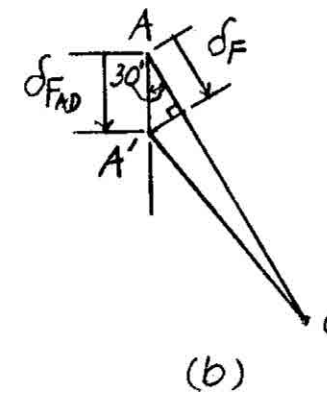

Ans:
$\sigma_{AB} = \sigma_{AC} = 10.4$ ksi, $\sigma_{AD} = 13.8$ ksi

4–63. If the supporting rods of equal diameter are made from A992 steel, determine the required diameter to the nearest $\frac{1}{8}$ in. of each rod when $P = 100$ kip. The allowable normal stress of the steel is $\sigma_{\text{allow}} = 24$ ksi.

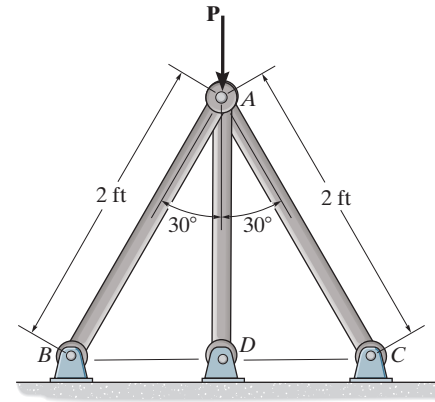

Equation of Equilibrium: Referring to the free-body diagram of joint A shown in Fig. a,

$$\overset{+}{\rightarrow} \Sigma F_x = 0; \qquad F_{AB} \sin 30° - F_{AC} \sin 30° = 0 \qquad F_{AB} = F_{AC} = F$$

$$+\uparrow \Sigma F_y = 0; \qquad 2F \cos 30° + F_{AD} - 100 = 0 \qquad (1)$$

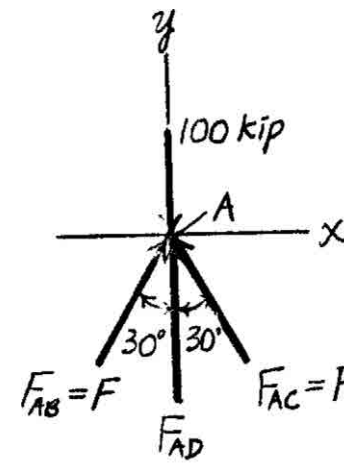

(a)

Compatibility Equation: Due to symmetry, joint A will displace vertically. Referring to the geometry shown in Fig. b, we have

$$\delta_F = \delta_{F_{AD}} \cos 30°$$

$$\frac{F(2)(12)}{AE_{\text{st}}} = \left\{ \frac{F_{AD}[2 \cos 30°(12)]}{AE_{\text{st}}} \right\} \cos 30°$$

$$F = 0.75 F_{AD} \qquad (2)$$

Solving Eqs. (1) and (2),

$$F_{AD} = 43.496 \text{ kip} \qquad F = 32.62 \text{ kip}$$

Normal Stress: Since all of the rods have the same diameter and rod AD is subjected to the greatest load, it is the critical member.

$$\sigma_{\text{allow}} = \frac{F_{AD}}{A_{AD}} \qquad 24 = \frac{43.496}{\frac{\pi}{4} d^2}$$

Use $d = 1.519$ in. $= 1\frac{5}{8}$ in. **Ans.**

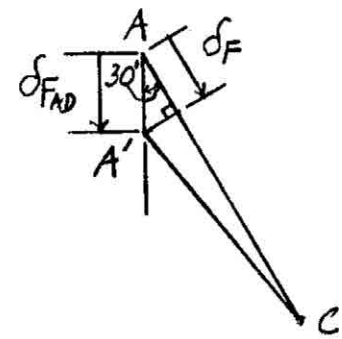

(b)

Ans:

Use $d = 1\frac{5}{8}$ in.

***4–64.** The center post B of the assembly has an original length of 124.7 mm, whereas posts A and C have a length of 125 mm. If the caps on the top and bottom can be considered rigid, determine the average normal stress in each post. The posts are made of aluminum and have a cross-sectional area of 400 mm^2. $E_{al} = 70$ GPa.

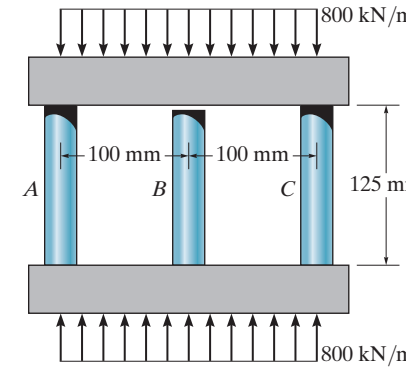

$\circlearrowleft + \Sigma M_B = 0; \qquad -F_A(100) + F_C(100) = 0$

$F_A = F_C = F \qquad (1)$

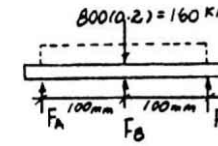

$+\uparrow \Sigma F_y = 0; \qquad 2F + F_B - 160 = 0 \qquad (2)$

$\delta_A = \delta_B + 0.0003$

$$\frac{F\,(0.125)}{400\,(10^{-6})(70)(10^6)} = \frac{F_B\,(0.1247)}{400\,(10^{-6})(70)(10^6)} + 0.0003$$

$0.125\,F - 0.1247 F_B = 8.4 \qquad (3)$

Solving Eqs. (2) and (3)

$F = 75.726$ kN

$F_B = 8.547$ kN

$$\sigma_A = \sigma_C = \frac{75.726\,(10^3)}{400\,(10^{-6})} = 189 \text{ MPa} \qquad \textbf{Ans.}$$

$$\sigma_B = \frac{8.547\,(10^3)}{400\,(10^{-6})} = 21.4 \text{ MPa} \qquad \textbf{Ans.}$$

4–65. Initially the A-36 bolt shank fits snugly against the rigid caps E and F on the 6061-T6 aluminum sleeve. If the thread of the bolt shank has a lead of 1 mm, and the nut is tightened $\frac{3}{4}$ of a turn, determine the average normal stress developed in the bolt shank and the sleeve. The diameter of bolt shank is $d = 60$ mm.

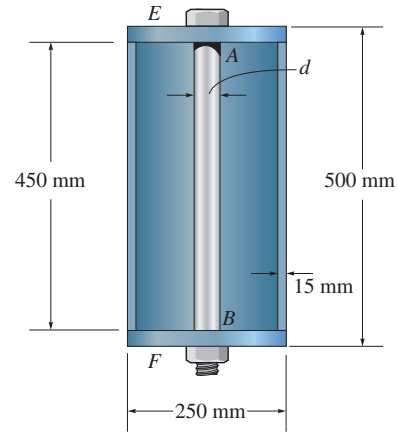

Equation of Equilibrium: Referring to the free-body diagram of the cut part of the assembly shown in Fig. *a*,

$$+\uparrow \Sigma F_y = 0; \qquad F_s - F_b = 0 \tag{1}$$

Compatibility Equation: When the nut is tightened 3/4 of a turn, the unconstrained bolt will be shortened by $\delta_b = \frac{3}{4}(1) = 0.75$ mm.

Referring to the initial and final position of the assembly shown in Fig. *b*,

$$\delta_b - \delta_{F_b} = \delta_{F_s}$$

$$0.75 - \frac{F_b(500)}{\frac{\pi}{4}(0.06^2)(200)(10^9)} = \frac{F_s(450)}{\frac{\pi}{4}(0.25^2 - 0.22^2)(68.9)(10^9)}$$

$$1.4992F_b + F_s = 1\,271\,677.44 \tag{2}$$

Solving Eqs. (1) and (2),

$$F_s = F_b = 508\,831.16 \text{ N}$$

Normal Stress:

$$\sigma_s = \frac{F_s}{A_s} = \frac{508\,831.16}{\frac{\pi}{4}(0.25^2 - 0.22^2)} = 45.9 \text{ MPa} \qquad \textbf{Ans.}$$

$$\sigma_b = \frac{F_b}{A_b} = \frac{508\,831.16}{\frac{\pi}{4}(0.06^2)} = 180 \text{ MPa} \qquad \textbf{Ans.}$$

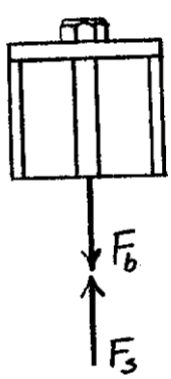

(a)

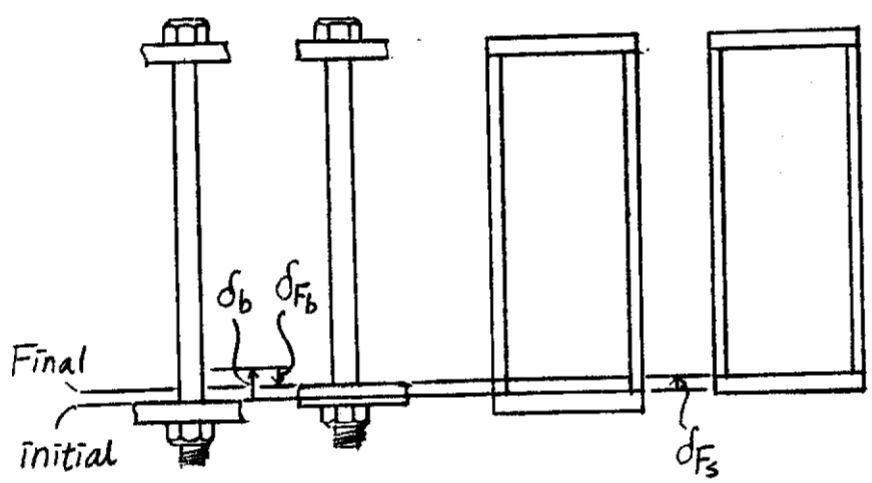

(b)

Ans:

$\sigma_s = 45.9$ MPa, $\sigma_b = 180$ MPa

4–66. Initially the A-36 bolt shank fits snugly against the rigid caps E and F on the 6061-T6 aluminum sleeve. If the thread of the bolt shank has a lead of 1 mm, and the nut is tightened $\frac{3}{4}$ of a turn, determine the required diameter d of the shank and the force developed in the shank and sleeve so that the normal stress developed in the shank is four times that of the sleeve.

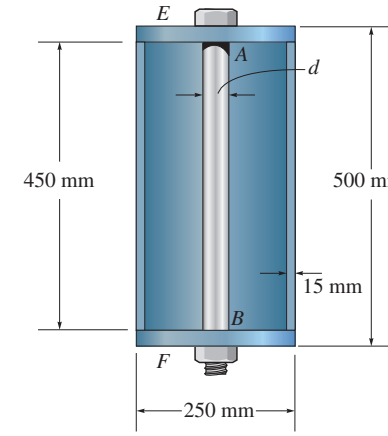

Equation of Equilibrium: Referring to the free-body diagram of the cut part of the assembly shown in Fig. *a*,

$$+\uparrow \Sigma F_y = 0, \qquad F_s - F_b = 0 \qquad\qquad F_s = F_b = F$$

Normal Stress: It is required that $\sigma_b = 4\sigma_s$,

$$\sigma_b = 4\sigma_s$$

$$\frac{F}{\frac{\pi}{4} d_b{}^2} = 4\left[\frac{F}{\frac{\pi}{4}(0.25^2 - 0.22^2)}\right]$$

$$d_b = 0.05937 \text{ m} = 59.4 \text{ mm} \qquad \textbf{Ans.}$$

Compatibility Equation: When the nut is tightened 3/4 of a turn, the unconstrained bolt will be shortened by $\delta_b = \frac{3}{4}(1) = 0.75 \text{ mm}$. Referring to the initial and final position of the assembly shown in Fig. *b*,

$$\delta_b - \delta_{F_b} = \delta_{F_s}$$

$$0.75 - \frac{F_b(500)}{\frac{\pi}{4}(0.05937^2)(200)(10^9)} = \frac{F_s(450)}{\frac{\pi}{4}(0.25^2 - 0.22^2)(68.9)(10^9)}$$

$$F_s = F_b = F = 502\,418.65 \text{ N} = 502 \text{ kN} \qquad \textbf{Ans.}$$

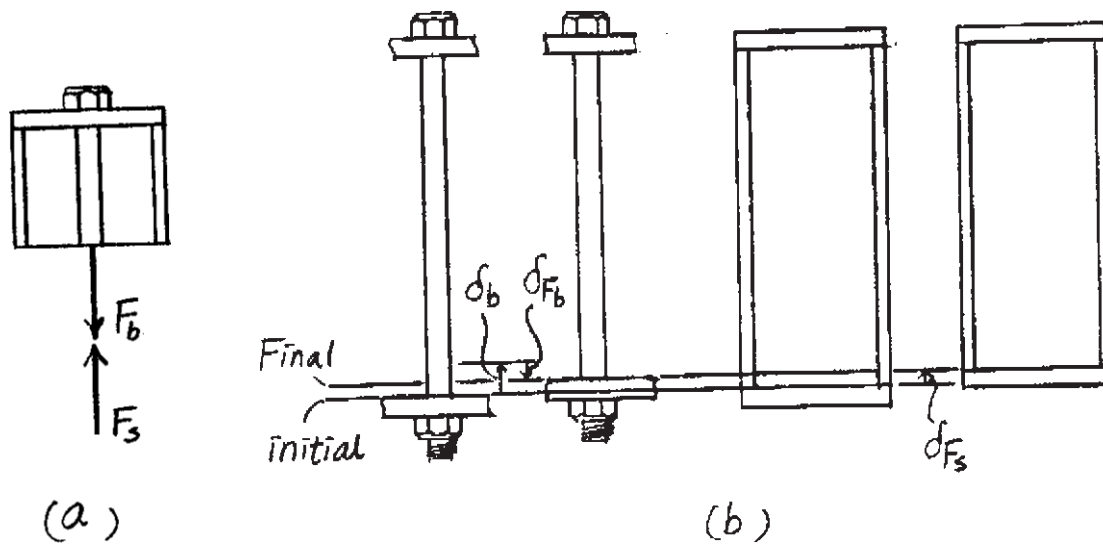

Ans:
$d_b = 59.4$ mm, $F_s = F_b = 502$ kN

4–67. The assembly consists of a 6061-T6-aluminum member and a C83400-red-brass member that rest on the rigid plates. Determine the distance d where the vertical load **P** should be placed on the plates so that the plates remain horizontal when the materials deform. Each member has a width of 8 in. and they are not bonded together.

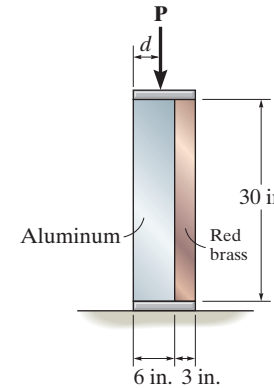

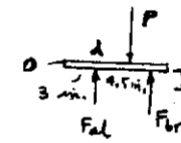

$$+\uparrow \Sigma F_y = 0; \qquad -P + F_{al} + F_{br} = 0$$

$$\circlearrowleft + \Sigma M_O = 0; \qquad 3\,F_{al} + 7.5\,F_{br} - Pd = 0$$

$$\delta = \delta_{br} = \delta_{al}$$

$$\frac{F_{br}\,L}{A_{br}\,E_{br}} = \frac{F_{al}\,L}{A_{al}\,E_{al}}$$

$$F_{br} = F_{al}\left(\frac{A_{br}\,E_{br}}{A_{al}\,E_{al}}\right) = F_{al}\left(\frac{(3)(8)(14.6)(10^3)}{6(8)(10)(10^3)}\right) = 0.730\,F_{al}$$

Thus,

$$P = 1.730\,F_{al}$$
$$3\,F_{al} + 7.5(0.730\,F_{al}) = (1.730\,F_{al})d$$
$$d = 4.90 \text{ in.} \qquad \textbf{Ans.}$$

Ans:
$d = 4.90$ in.

***4–68.** The C83400-red-brass rod AB and 2014-T6-aluminum rod BC are joined at the collar B and fixed connected at their ends. If there is no load in the members when $T_1 = 50°\text{F}$, determine the average normal stress in each member when $T_2 = 120°\text{F}$. Also, how far will the collar be displaced? The cross-sectional area of each member is 1.75 in^2.

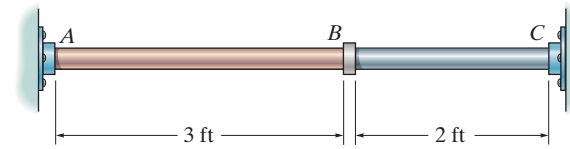

$\Sigma F_x = 0; \qquad F_{br} = F_{al} = F$

$$\delta_{N/C} = 0$$

$$-\frac{F_{br} L_{AB}}{A_{AB} E_{br}} + \alpha_B \Delta T\, L_{AB} - \frac{F_{al} L_{BC}}{A_{BC} E_{al}} + \alpha_{al} \Delta T\, L_{BC} = 0$$

$$-\frac{F(3)(12)}{(1.75)(14.6)(10^6)} + 9.80(10^{-6})(120 - 50)(3)(12)$$

$$-\frac{F(2)(12)}{1.75(10.6)(10^6)} + 12.8(10^{-6})(120 - 50)(2)(12) = 0$$

$$F = 17\,093.4 \text{ lb}$$

$$\sigma_{br} = \sigma_{al} = \frac{17\,093.4}{1.75} = 9.77 \text{ ksi} \qquad \textbf{Ans.}$$

$$9.77 \text{ ksi} < (\sigma\gamma)_{al} \quad \text{and } (\sigma\gamma)_{br} \qquad \textbf{OK}$$

$$\delta_B = -\frac{17\,093.4(3)(12)}{1.75(14.6)(10^6)} + 9.80(10^{-6})(120 - 50)(3)(12)$$

$$\delta_B = 0.611(10^{-3}) \text{ in.} \rightarrow \qquad \textbf{Ans.}$$

4–69. The assembly has the diameters and material makeup indicated. If it fits securely between its fixed supports when the temperature is $T_1 = 70°\text{F}$, determine the average normal stress in each material when the temperature reaches $T_2 = 110°\text{F}$.

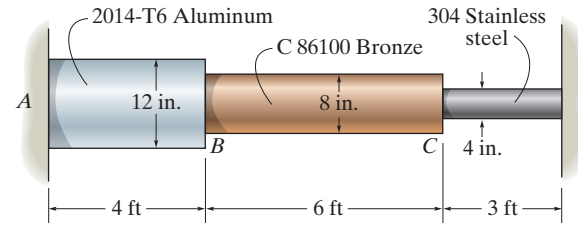

$\Sigma F_x = 0; \qquad F_A = F_B = F$

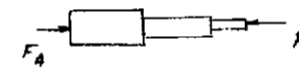

$$\delta_{A/D} = 0; \qquad -\frac{F(4)(12)}{\pi(6)^2(10.6)(10^6)} + 12.8(10^{-6})(110 - 70)(4)(12)$$

$$-\frac{F(6)(12)}{\pi(4)^2(15)(10^6)} + 9.60(10^{-6})(110 - 70)(6)(12)$$

$$-\frac{F(3)(12)}{\pi(2)^2(28)(10^6)} + 9.60(10^{-6})(110 - 70)(3)(12) = 0$$

$$F = 277.69 \text{ kip}$$

$$\sigma_{\text{al}} = \frac{277.69}{\pi(6)^2} = 2.46 \text{ ksi}$$ **Ans.**

$$\sigma_{\text{br}} = \frac{277.69}{\pi(4)^2} = 5.52 \text{ ksi}$$ **Ans.**

$$\sigma_{\text{st}} = \frac{277.69}{\pi(2)^2} = 22.1 \text{ ksi}$$ **Ans.**

Ans:
$\sigma_{\text{al}} = 2.46$ ksi, $\sigma_{\text{br}} = 5.52$ ksi, $\sigma_{\text{st}} = 22.1$ ksi

4–70. The rod is made of A992 steel and has a diameter of 0.25 in. If the rod is 4 ft long when the springs are compressed 0.5 in. and the temperature of the rod is $T = 40°\text{F}$, determine the force in the rod when its temperature is $T = 160°\text{F}$.

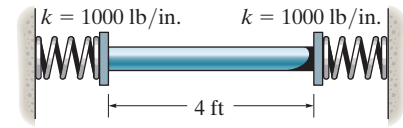

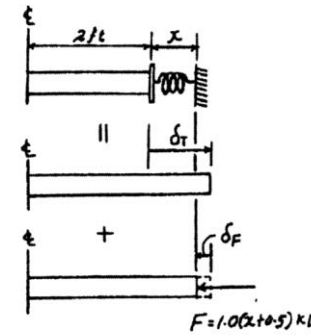

Compatibility:

$(\overset{+}{\rightarrow})$ $\quad x = \delta_T - \delta_F$

$$x = 6.60(10^{-6})(160 - 40)(2)(12) - \frac{1.00(x + 0.5)(2)(12)}{\frac{\pi}{4}(0.25^2)(29.0)(10^3)}$$

$x = 0.01040$ in.

$F = 1.00(0.01040 + 0.5) = 0.510$ kip **Ans.**

Ans:
$F = 0.510$ kip

4–71. If the assembly fits snugly between two rigid supports A and C when the temperature is at T_1, determine the normal stress developed in both rod segments when the temperature rises to T_2. Both segments are made of the same material, having a modulus of elasticity of E and coefficient of thermal expansion of α.

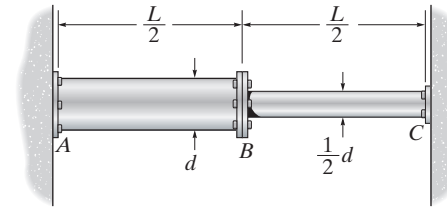

Compatibility Equation: When the assembly is unconstrained, it has a free expansion of $\delta_T = \alpha \Delta T L = \alpha(T_2 - T_1)L$. Using the method of superposition, Fig. *a*,

$$(\overset{+}{\rightarrow}) \qquad 0 = \delta_T - \delta_F$$

$$0 = \alpha(T_2 - T_1)L - \left[\frac{F(L/2)}{\frac{\pi}{4}\left(\frac{d}{2}\right)^2 E} + \frac{F(L/2)}{\left(\frac{\pi}{4}d^2\right)E}\right]$$

$$F = \frac{\alpha(T_2 - T_1)\pi d^2 E}{10}$$

Normal Stress:

$$\sigma_{AB} = \frac{F}{A_{AB}} = \frac{\frac{\alpha(T_2 - T_1)\pi d^2 E}{10}}{\frac{\pi}{4}d^2} = \frac{2}{5}\alpha(T_2 - T_1)E \qquad \textbf{Ans.}$$

$$\sigma_{BC} = \frac{F}{A_{BC}} = \frac{\frac{\alpha(T_2 - T_1)\pi d^2 E}{10}}{\frac{\pi}{4}\left(\frac{d}{2}\right)^2} = \frac{8}{5}\alpha(T_2 - T_1)E \qquad \textbf{Ans.}$$

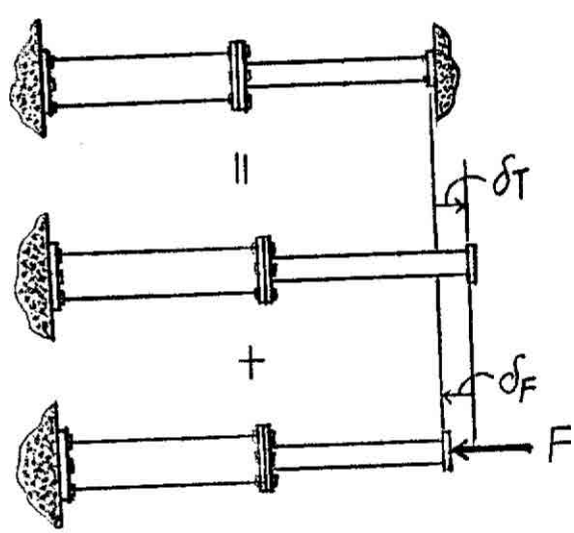

(a)

Ans:

$\sigma_{AB} = \frac{2}{5}\alpha(T_2 - T_1)E, \sigma_{BC} = \frac{8}{5}\alpha(T_2 - T_1)E$

***4–72.** If the assembly fits snugly between the two supports A and C when the temperature is at T_1, determine the normal stress developed in both segments when the temperature rises to T_2. Both segments are made of the same material having a modulus of elasticity of E and coefficient of the thermal expansion of α. The flexible supports at A and C each have a stiffness k.

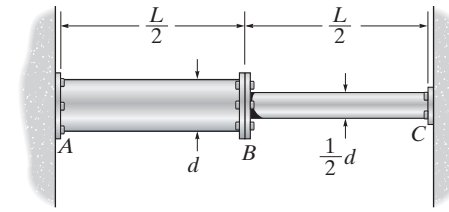

Compatibility Equation: When the assembly is unconstrained, it has a free expansion of $\delta_T = \alpha \Delta T L = \alpha(T_2 - T_1)L$. Using the method of superposition, Fig. *a*,

$$(\overset{+}{\rightarrow}) \quad \delta_C = \delta_T - \delta_F$$

$$\frac{F}{k} = \alpha(T_2 - T_1)L - \left[\frac{F(L/2)}{\frac{\pi}{4}\left(\frac{d}{2}\right)^2 E} + \frac{F(L/2)}{\left(\frac{\pi}{4}d^2\right)E} + \frac{F}{k}\right]$$

$$F = \frac{\alpha(T_2 - T_1)L\pi d^2 Ek}{10kL + 2\pi d^2 E}$$

Normal Stress:

$$\sigma_{AB} = \frac{F}{A_{AB}} = \frac{\dfrac{\alpha(T_2 - T_1)L\pi d^2 Ek}{10kL + 2\pi d^2 E}}{\dfrac{\pi}{4}d^2} = \frac{4Ek\alpha(T_2 - T_1)L}{10kL + 2\pi d^2 E} \qquad \textbf{Ans.}$$

$$\sigma_{BC} = \frac{F}{A_{BC}} = \frac{\dfrac{\alpha(T_2 - T_1)L\pi d^2 Ek}{10kL + 2\pi d^2 E}}{\dfrac{\pi}{4}\left(\dfrac{d}{2}\right)^2} = \frac{16Ek\alpha(T_2 - T_1)L}{10kL + 2\pi d^2 E} \qquad \textbf{Ans.}$$

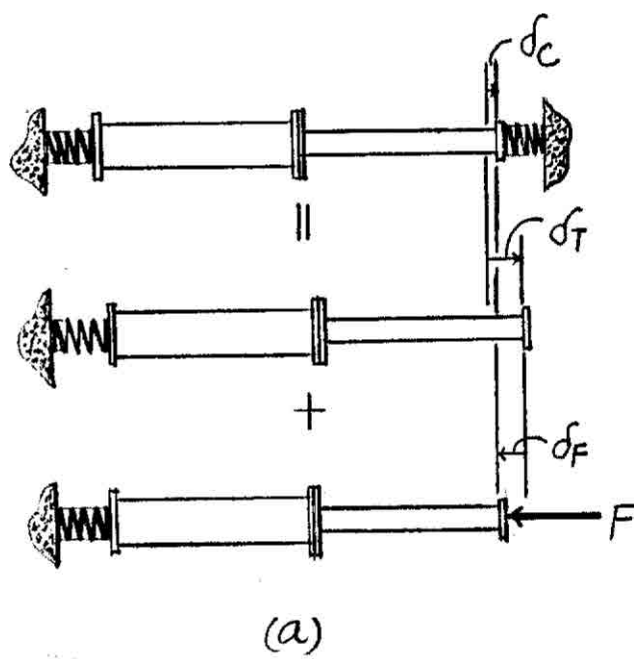

4–73. The pipe is made of A992 steel and is connected to the collars at A and B. When the temperature is 60°F, there is no axial load in the pipe. If hot gas traveling through the pipe causes its temperature to rise by $\Delta T = (40 + 15x)$°F, where x is in feet, determine the average normal stress in the pipe. The inner diameter is 2 in., the wall thickness is 0.15 in.

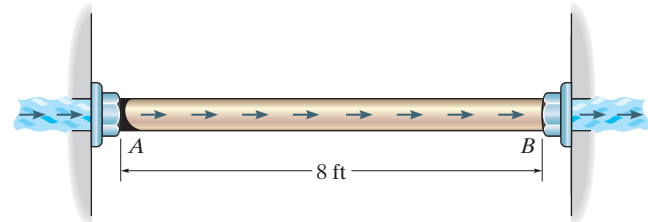

Compatibility:

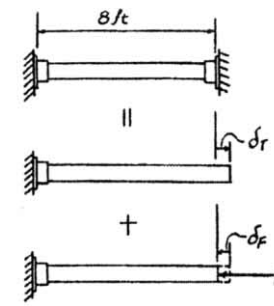

$$0 = \delta_T - \delta_F \qquad \text{Where} \qquad \delta_T = \int_0^L \alpha\, \Delta T\, dx$$

$$0 = 6.60\left(10^{-6}\right)\int_0^{8\text{ ft}} (40 + 15\,x)\, dx - \frac{F(8)}{A(29.0)(10^3)}$$

$$0 = 6.60\left(10^{-6}\right)\left[40(8) + \frac{15(8)^2}{2}\right] - \frac{F(8)}{A(29.0)(10^3)}$$

$$F = 19.14\,A$$

Average Normal Stress:

$$\sigma = \frac{19.14\,A}{A} = 19.1 \text{ ksi}$$ **Ans.**

Ans:
$\sigma = 19.1$ ksi

4–74. The bronze C86100 pipe has an inner radius of 0.5 in. and a wall thickness of 0.2 in. If the gas flowing through it changes the temperature of the pipe uniformly from $T_A = 200°\text{F}$ at A to $T_B = 60°\text{F}$ at B, determine the axial force it exerts on the walls. The pipe was fitted between the walls when $T = 60°\text{F}$.

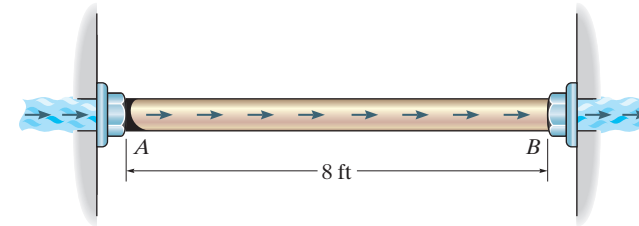

Temperature Gradient:

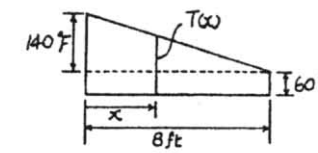

$$T(x) = 60 + \left(\frac{8 - x}{8}\right)140 = 200 - 17.5x$$

Compatibility:

$$0 = \delta_T - \delta_F \qquad \text{Where} \qquad \delta_T = \int \alpha \Delta T dx$$

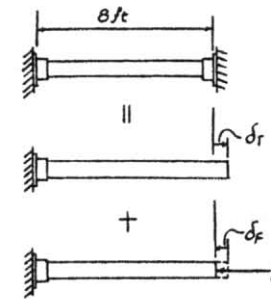

$$0 = 9.60\left(10^{-6}\right)\int_0^{8\text{ ft}} [(200 - 17.5x) - 60]\, dx - \frac{F(8)}{\frac{\pi}{4}(1.4^2 - 1^2)15.0(10^3)}$$

$$0 = 9.60\left(10^{-6}\right)\int_0^{8\text{ ft}} (140 - 17.5x)\, dx - \frac{F(8)}{\frac{\pi}{4}(1.4^2 - 1^2)\, 15.0(10^3)}$$

$F = 7.60$ kip **Ans.**

Ans:
$F = 7.60$ kip

4–75. The 40-ft-long A-36 steel rails on a train track are laid with a small gap between them to allow for thermal expansion. Determine the required gap δ so that the rails just touch one another when the temperature is increased from $T_1 = -20°\text{F}$ to $T_2 = 90°\text{F}$. Using this gap, what would be the axial force in the rails if the temperature were to rise to $T_3 = 110°\text{F}$? The cross-sectional area of each rail is $5.10\ \text{in}^2$.

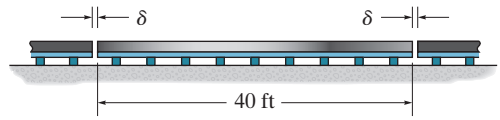

Thermal Expansion: Note that since adjacent rails expand, each rail will be required to expand $\frac{\delta}{2}$ on each end, or δ for the entire rail.

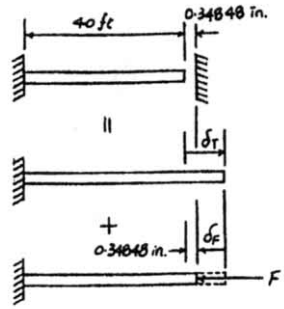

$$\delta = \alpha \Delta T L = 6.60(10^{-6})[90 - (-20)](40)(12)$$

$$= 0.34848\ \text{in.} = 0.348\ \text{in.} \qquad \textbf{Ans.}$$

Compatibility:

$$(\overset{+}{\rightarrow}) \qquad 0.34848 = \delta_T - \delta_F$$

$$0.34848 = 6.60(10^{-6})[110 - (-20)](40)(12) - \frac{F(40)(12)}{5.10(29.0)(10^3)}$$

$$F = 19.5\ \text{kip} \qquad \textbf{Ans.}$$

Ans:
$\delta = 0.348$ in., $F = 19.5$ kip

***4–76.** The device is used to measure a change in temperature. Bars AB and CD are made of A-36 steel and 2014-T6 aluminum alloy respectively. When the temperature is at 75°F, ACE is in the horizontal position. Determine the vertical displacement of the pointer at E when the temperature rises to 150°F.

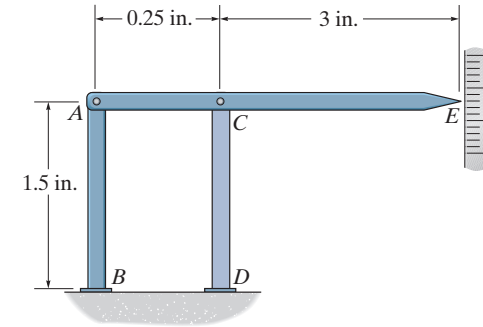

Thermal Expansion:

$$\left(\delta_T\right)_{CD} = \alpha_{\text{al}}\Delta T L_{CD} = 12.8(10^{-6})(150 - 75)(1.5) = 1.44(10^{-3}) \text{ in.}$$

$$\left(\delta_T\right)_{AB} = \alpha_{\text{st}}\Delta T L_{AB} = 6.60(10^{-6})(150 - 75)(1.5) = 0.7425(10^{-3}) \text{ in.}$$

From the geometry of the deflected bar AE shown, Fig. a,

$$\delta_E = \left(\delta_T\right)_{AB} + \left[\frac{\left(\delta_T\right)_{CD} - \left(\delta_T\right)_{AB}}{0.25}\right](3.25)$$

$$= 0.7425(10^{-3}) + \left[\frac{1.44(10^{-3}) - 0.7425(10^{-3})}{0.25}\right](3.25)$$

$$= 0.00981 \text{ in.} \qquad \textbf{Ans.}$$

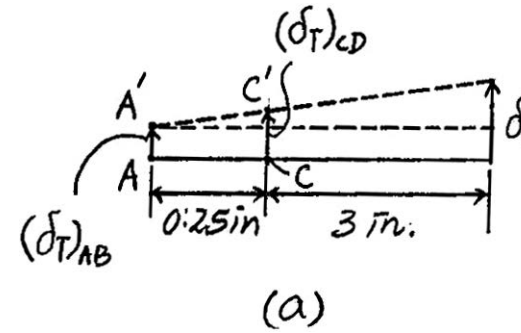

(a)

4–77. The bar has a cross-sectional area A, length L, modulus of elasticity E, and coefficient of thermal expansion a. The temperature of the bar changes uniformly along its length from T_A at A to T_B at B so that at any point x along the bar $T = T_A + x(T_B - T_A)/L$. Determine the force the bar exerts on the rigid walls. Initially no axial force is in the bar and the bar has a temperature of T_A.

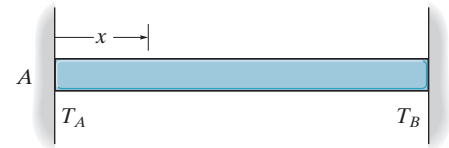

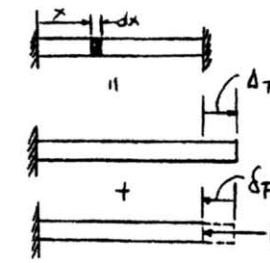

$$\overset{+}{\rightarrow} \quad 0 = \Delta_T - \delta_F \qquad (1)$$

However,

$$d\Delta_T = \alpha\Delta_T\, dx = \alpha\left(T_A + \frac{T_B - T_A}{L}x - T_A\right)dx$$

$$\Delta_T = \alpha\int_0^L \frac{T_B - T_A}{L}x\, dx = \alpha\left[\frac{T_B - T_A}{2L}x^2\right]\Bigg|_0^L$$

$$= \alpha\left[\frac{T_B - T_A}{2}L\right] = \frac{\alpha L}{2}(T_B - T_A)$$

From Eq. (1).

$$0 = \frac{\alpha L}{2}(T_B - T_A) - \frac{FL}{AE}$$

$$F = \frac{\alpha AE}{2}(T_B - T_A) \qquad \textbf{Ans.}$$

Ans:
$F = \dfrac{\alpha AE}{2}(T_B - T_A)$

4–78. When the temperature is at 30°C, the A-36 steel pipe fits snugly between the two fuel tanks. When fuel flows through the pipe, the temperatures at ends A and B rise to 130°C and 80°C, respectively. If the temperature drop along the pipe is linear, determine the average normal stress developed in the pipe. Assume each tank provides a rigid support at A and B.

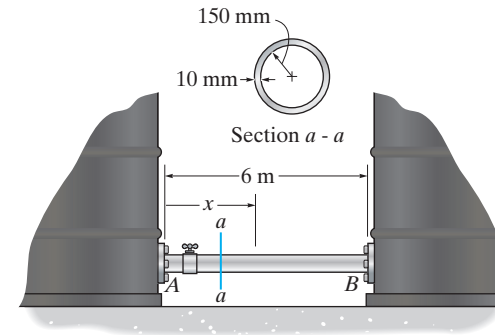

Temperature Gradient: Since the temperature varies linearly along the pipe, Fig. *a*, the temperature gradient can be expressed as a function of x as

$$T(x) = 80 + \frac{50}{6}(6 - x) = \left(130 - \frac{50}{6}x\right)°\text{C}$$

Thus, the change in temperature as a function of x is

$$\Delta T = T(x) - 30° = \left(130 - \frac{50}{6}x\right) - 30 = \left(100 - \frac{50}{6}x\right)°\text{C}$$

Compatibility Equation: If the pipe is unconstrained, it will have a free expansion of

$$\delta_T = \alpha \int \Delta T dx = 12(10^{-6}) \int_0^{6\text{m}} \left(100 - \frac{50}{6}x\right) dx = 0.0054 \text{ m} = 5.40 \text{ mm}$$

Using the method of superposition, Fig. *b*,

$$(\overset{+}{\rightarrow}) \qquad 0 = \delta_T - \delta_F$$

$$0 = 5.40 - \frac{F(6000)}{\pi(0.16^2 - 0.15^2)(200)(10^9)}$$

$$F = 1\,753\,008 \text{ N}$$

Normal Stress:

$$\sigma = \frac{F}{A} = \frac{1\,753\,008}{\pi(0.16^2 - 0.15^2)} = 180 \text{ MPa} \qquad \textbf{Ans.}$$

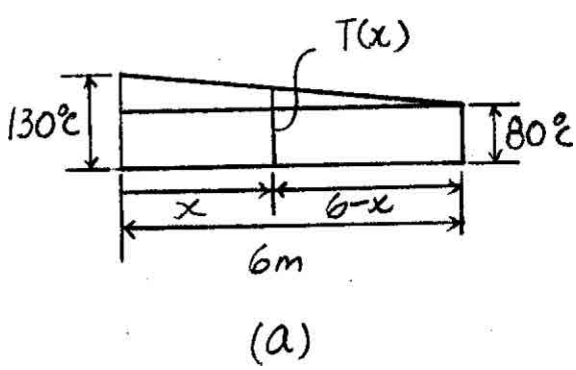

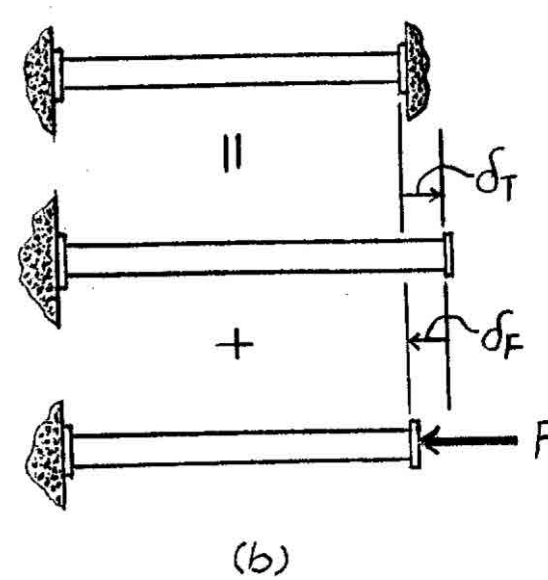

Ans:
$\sigma = 180$ MPa

4–79. When the temperature is at 30°C, the A-36 steel pipe fits snugly between the two fuel tanks. When fuel flows through the pipe, the temperatures at ends A and B rise to 130°C and 80°C, respectively. If the temperature drop along the pipe is linear, determine the average normal stress developed in the pipe. Assume the walls of each tank act as a spring, each having a stiffness of $k = 900\ \text{MN/m}$.

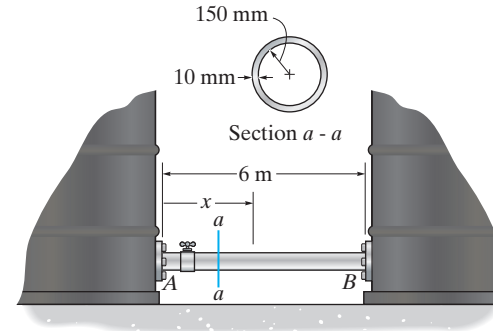

Temperature Gradient: Since the temperature varies linearly along the pipe, Fig. *a*, the temperature gradient can be expressed as a function of x as

$$T(x) = 80 + \frac{50}{6}(6 - x) = \left(130 - \frac{50}{6}x\right)°\text{C}$$

Thus, the change in temperature as a function of x is

$$\Delta T = T(x) - 30° = \left(130 - \frac{50}{6}x\right) - 30 = \left(100 - \frac{50}{6}x\right)°\text{C}$$

Compatibility Equation: If the pipe is unconstrained, it will have a free expansion of

$$\delta_T = \alpha \int \Delta T dx = 12(10^{-6}) \int_0^{6\text{ m}} \left(100 - \frac{50}{6}x\right) dx = 0.0054\text{ m} = 5.40\text{ mm}$$

Using the method of superposition, Fig. *b*,

$$(\overset{+}{\rightarrow}) \quad \delta = \delta_T - \delta_F$$

$$\frac{F}{900(10^6)}(1000) = 5.40 - \left[\frac{F(6000)}{\pi(0.16^2 - 0.15^2)(200)(10^9)} + \frac{F}{900(10^6)}(1000)\right]$$

$$F = 1\,018\,361\text{ N}$$

Normal Stress:

$$\sigma = \frac{F}{A} = \frac{1\,018\,361}{\pi(0.16^2 - 0.15^2)} = 105\text{ MPa} \qquad \textbf{Ans.}$$

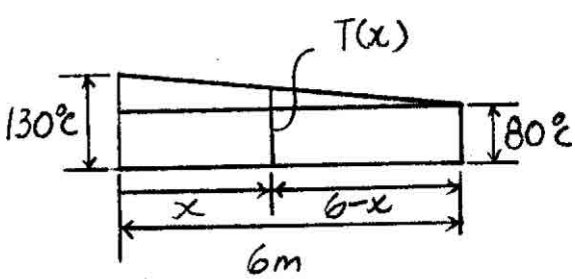

(a)

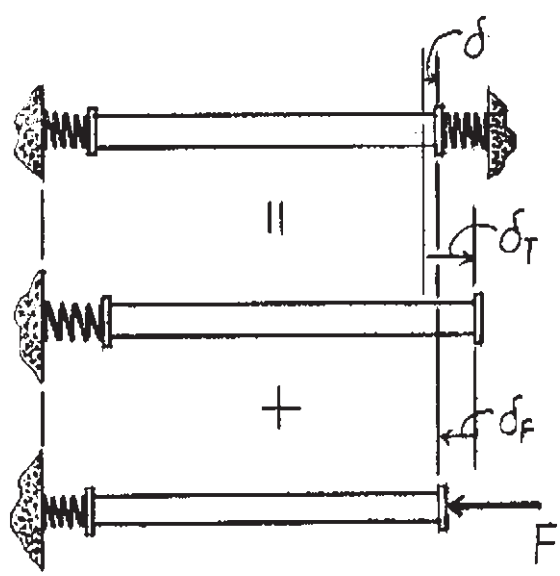

(b)

Ans:
$\sigma = 105\text{ MPa}$

***4–80.** When the temperature is at 30°C, the A-36 steel pipe fits snugly between the two fuel tanks. When fuel flows through the pipe, it causes the temperature to vary along the pipe as $T = (\frac{5}{3}x^2 - 20x + 120)°\text{C}$, where x is in meters. Determine the normal stress developed in the pipe. Assume each tank provides a rigid support at A and B.

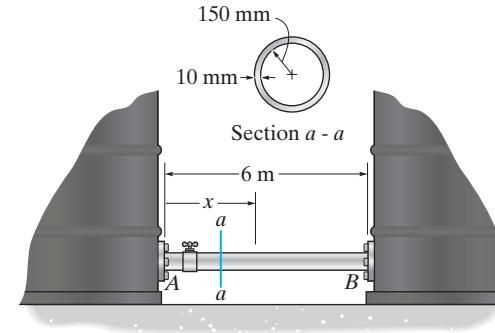

Compatibility Equation: The change in temperature as a function of x is $\Delta T = T - 30° = \left(\frac{5}{3}x^2 - 20x + 120\right) - 30 = \left(\frac{5}{3}x^2 - 20x + 90\right)°\text{C}$. If the pipe is unconstrained, it will have a free expansion of

$$\delta_T = \alpha \int \Delta T dx = 12(10^{-6}) \int_0^{6\text{ m}} \left(\frac{5}{3}x^2 - 20x + 90\right) dx = 0.0036 \text{ m} = 3.60 \text{ mm}$$

Using the method of superposition, Fig. b,

$$(\overset{+}{\rightarrow}) \qquad 0 = \delta_T - \delta_F$$

$$0 = 3.60 - \frac{F(6000)}{\pi(0.16^2 - 0.15^2)(200)(10^9)}$$

$$F = 1\,168\,672.47 \text{ N}$$

Normal Stress:

$$\sigma = \frac{F}{A} = \frac{1\,168\,672.47}{\pi(0.16^2 - 0.15^2)} = 120 \text{ MPa} \qquad \textbf{Ans.}$$

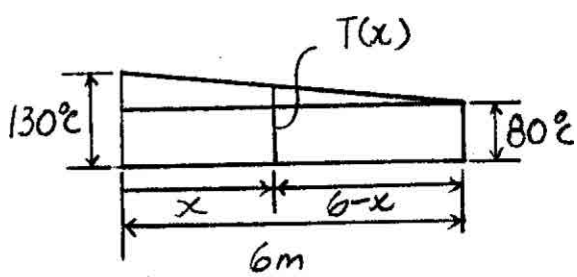

(a)

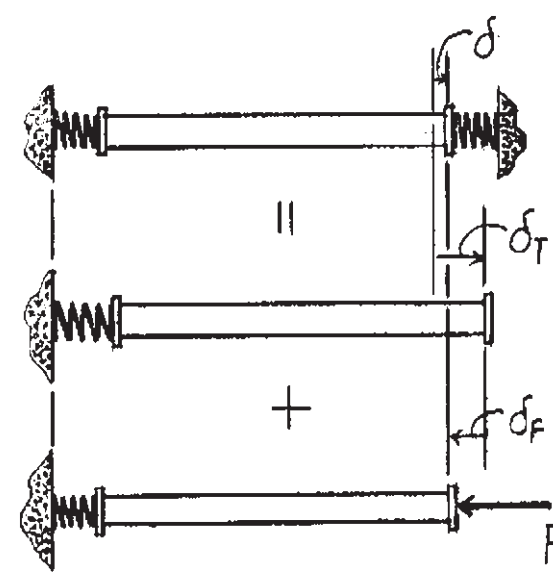

(b)

4–81. The 50-mm-diameter cylinder is made from Am 1004-T61 magnesium and is placed in the clamp when the temperature is $T_1 = 20°$ C. If the 304-stainless-steel carriage bolts of the clamp each have a diameter of 10 mm, and they hold the cylinder snug with negligible force against the rigid jaws, determine the force in the cylinder when the temperature rises to $T_2 = 130°$ C.

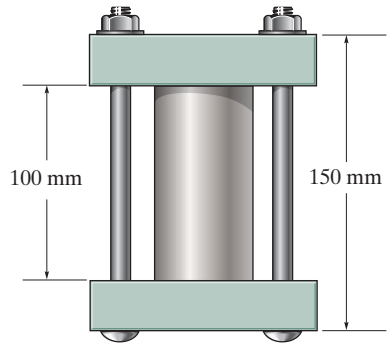

$+\uparrow \Sigma F_y = 0;$ $\qquad F_{st} = F_{mg} = F$

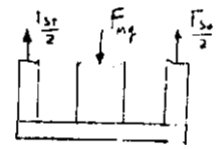

$$\delta_{mg} = \delta_{st}$$

$$\alpha_{mg} L_{mg} \Delta T - \frac{F_{mg} L_{mg}}{E_{mg} A_{mg}} = \alpha_{st} L_{st} \Delta T + \frac{F_{st} L_{st}}{E_{st} A_{st}}$$

$$26(10^{-6})(0.1)(110) - \frac{F(0.1)}{44.7(10^9)\frac{\pi}{4}(0.05)^2} = 17(10^{-6})(0.150)(110) + \frac{F(0.150)}{193(10^9)(2)\frac{\pi}{4}(0.01)^2}$$

$F = 904$ N **Ans.**

Ans:
$F = 904$ N

4–82. The 50-mm-diameter cylinder is made from Am 1004-T61 magnesium and is placed in the clamp when the temperature is $T_1 = 15°C$. If the two 304-stainless-steel carriage bolts of the clamp each have a diameter of 10 mm, and they hold the cylinder snug with negligible force against the rigid jaws, determine the temperature at which the average normal stress in either the magnesium or the steel first becomes 12 MPa.

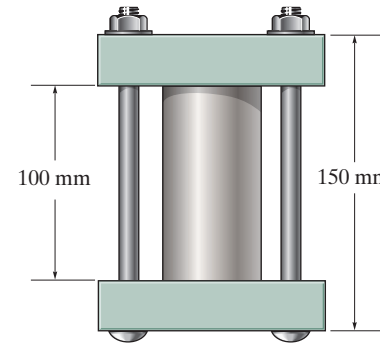

$$+\uparrow \Sigma F_y = 0; \qquad F_{st} = F_{mg} = F$$

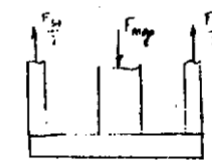

$$\delta_{mg} = \delta_{st}$$

$$\alpha_{mg} L_{mg} \Delta T - \frac{F_{mg} L_{mg}}{E_{mg} A_{mg}} = \alpha_{st} L_{st} \Delta T + \frac{F_{st} L_{st}}{E_{st} A_{st}}$$

$$26(10^{-6})(0.1)(\Delta T) - \frac{F(0.1)}{44.7(10^9)\frac{\pi}{4}(0.05)^2} = 17(10^{-6})(0.150)(\Delta T) + \frac{F(0.150)}{193(10^9)(2)\frac{\pi}{4}(0.01)^2}$$

The steel has the smallest cross-sectional area.

$$F = \sigma A = 12(10^6)(2)(\frac{\pi}{4})(0.01)^2 = 1885.0 \text{ N}$$

Thus,

$$\Delta T = 229°$$

$$T_2 = 229° + 15° = 244° \qquad \textbf{Ans.}$$

Ans:
$T_2 = 244°$

4–83. The wires AB and AC are made of steel, and wire AD is made of copper. Before the 150-lb force is applied, AB and AC are each 60 in. long and AD is 40 in. long. If the temperature is increased by 80°F, determine the force in each wire needed to support the load. Take $E_{st} = 29(10^3)$ ksi, $E_{cu} = 17(10^3)$ ksi, $\alpha_{st} = 8(10^{-6})/°F$, $\alpha_{cu} = 9.60(10^{-6})/°F$. Each wire has a cross-sectional area of $0.0123\ \text{in}^2$.

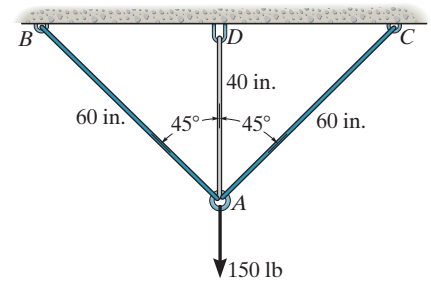

Equations of Equilibrium:

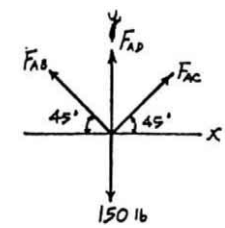

$$\overset{+}{\rightarrow} \Sigma F_x = 0; \qquad F_{AC}\cos 45° - F_{AB}\cos 45° = 0$$
$$F_{AC} = F_{AB} = F$$

$$+\uparrow \Sigma F_y = 0; \qquad 2F\sin 45° + F_{AD} - 150 = 0 \qquad (1)$$

Compatibility:

$$(\delta_{AC})_T = 8.0(10^{-6})(80)(60) = 0.03840 \text{ in.}$$

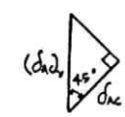

$$(\delta_{AC})_{T_2} = \frac{(\delta_{AC})_T}{\cos 45°} = \frac{0.03840}{\cos 45°} = 0.05431 \text{ in.}$$

$$(\delta_{AD})_T = 9.60(10^{-6})(80)(40) = 0.03072 \text{ in.}$$

$$\delta_0 = (\delta_{AC})_{T_2} - (\delta_{AD})_T = 0.05431 - 0.03072 = 0.02359 \text{ in.}$$

$$(\delta_{AD})_F = (\delta_{AC})_{F_r} + \delta_0$$

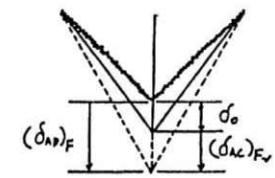

$$\frac{F_{AD}(40)}{0.0123(17.0)(10^6)} = \frac{F(60)}{0.0123(29.0)(10^6)\cos 45°} + 0.02359$$

$$0.1913F_{AD} - 0.2379F = 23.5858 \qquad (2)$$

Solving Eq. (1) and (2) yields:

$$F_{AC} = F_{AB} = F = 10.0 \text{ lb} \qquad \textbf{Ans.}$$

$$F_{AD} = 136 \text{ lb} \qquad \textbf{Ans.}$$

Ans:
$F_{AC} = F_{AB} = 10.0$ lb, $F_{AD} = 136$ lb

***4–84.** The center rod CD of the assembly is heated from $T_1 = 30°C$ to $T_2 = 180°C$ using electrical resistance heating. At the lower temperature T_1 the gap between C and the rigid bar is 0.7 mm. Determine the force in rods AB and EF caused by the increase in temperature. Rods AB and EF are made of steel, and each has a cross-sectional area of 125 mm^2. CD is made of aluminum and has a cross-sectional area of 375 mm^2. $E_{st} = 200$ GPa, $E_{al} = 70$ GPa, and $\alpha_{al} = 23(10^{-6})/°C$.

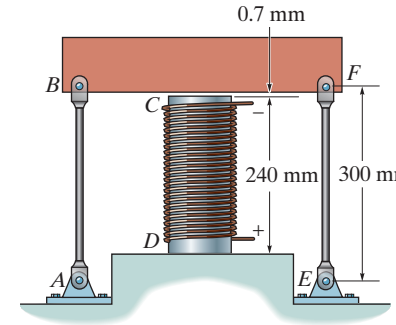

$$\delta_{st} = (\delta_\gamma)_{al} - \delta_{al} - 0.0007$$

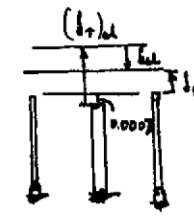

$$\frac{F_{st}(0.3)}{(125)(10^{-6})(200)(10^9)} = 23(10^{-6})(150)(0.24) - \frac{F(0.24)}{(375)(10^{-6})(70)(10^9)} - 0.0007$$

$$12F_{st} = 128\,000 - 9.1428F \qquad (1)$$

$$+\uparrow \Sigma F_y = 0; \qquad F - 2F_{st} = 0 \qquad (2)$$

Solving Eqs. (1) and (2) yields,

$$F_{AB} = F_{EF} = F_{st} = 4.23 \text{ kN}$$

Ans.

$$F_{CD} = F = 8.45 \text{ kN}$$

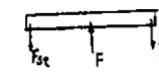

4–85. The center rod CD of the assembly is heated from $T_1 = 30°C$ to $T_2 = 180°C$ using electrical resistance heating. Also, the two end rods AB and EF are heated from $T_1 = 30°C$ to $T_2 = 50°C$. At the lower temperature T_1 the gap between C and the rigid bar is 0.7 mm. Determine the force in rods AB and EF caused by the increase in temperature. Rods AB and EF are made of steel, and each has a cross-sectional area of 125 mm^2. CD is made of aluminum and has a cross-sectional area of 375 mm^2. $E_{st} = 200$ GPa, $E_{al} = 70$ GPa, $\alpha_{st} = 12(10^{-6})/°C$ and $\alpha_{al} = 23(10^{-6})/°C$.

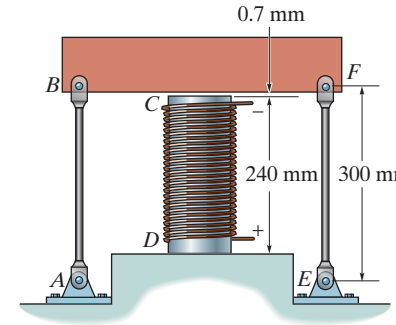

$$\delta_{st} + (\delta_T)_{st} = (\delta_T)_{al} - \delta_{al} - 0.0007$$

$$\frac{F_{st}(0.3)}{(125)(10^{-6})(200)(10^9)} + 12(10^{-6})(50 - 30)(0.3)$$

$$= 23(10^{-6})(180 - 30)(0.24) - \frac{F_{al}(0.24)}{375(10^{-6})(70)(10^9)} - 0.0007$$

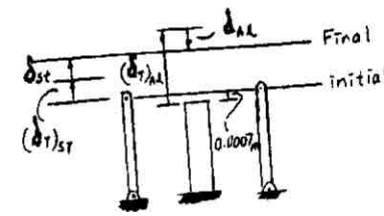

$$12.0F_{st} + 9.14286F_{al} = 56000 \qquad (1)$$

$$+\uparrow \Sigma F_y = 0; \qquad F_{al} - 2F_{st} = 0 \qquad (2)$$

Solving Eqs. (1) and (2) yields:

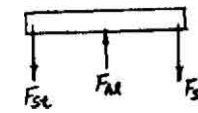

$$F_{AB} = F_{EF} = F_{st} = 1.85 \text{ kN} \qquad \textbf{Ans.}$$

$$F_{CD} = F_{al} = 3.70 \text{ kN}$$

Ans:
$F_{AB} = F_{EF} = 1.85$ kN

4–86. The metal strap has a thickness t and width w and is subjected to a temperature gradient T_1 to T_2 $(T_1 < T_2)$. This causes the modulus of elasticity for the material to vary linearly from E_1 at the top to a smaller amount E_2 at the bottom. As a result, for any vertical position y, $E = [(E_2 - E_1)/w]\,y + E_1$. Determine the position d where the axial force P must be applied so that the bar stretches uniformly over its cross section.

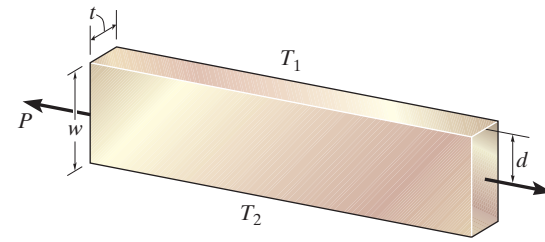

$$\epsilon = \text{constant} = \epsilon_0$$

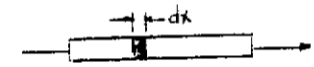

$$\epsilon_0 = \frac{\sigma}{E} = \frac{\sigma}{\left(\left(\frac{E_2 - E_1}{w}\right)y + E_1\right)}$$

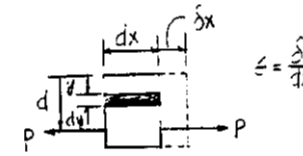

$$\sigma = \epsilon_0\left(\frac{E_2 - E_1}{w}y + E_1\right)$$

$$\overset{+}{\rightarrow} \Sigma F_x = 0: \quad P - \int_A \sigma\, dA = 0$$

$$P = \int_0^w \sigma\, t\, dy = \int_0^m \epsilon_0\left(\frac{E_2 - E_1}{w}y + E_1\right) t\, dy$$

$$P = \epsilon_0\, t\left(\frac{E_2 - E_1}{2} + E_1 w\right) = \epsilon_0\, t\left(\frac{E_2 + E_1}{2}\right) w$$

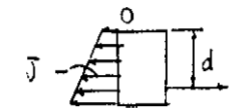

$$\circlearrowleft + \Sigma M_0 = 0: \quad P(d) - \int_A y\, \sigma dA = 0$$

$$\epsilon_0\, t\left(\frac{E_2 + E_1}{2}\right) w d = \int_0^w \epsilon_0\left(\left(\frac{E_2 - E_1}{w}\right)y^2 + E_1 y\right) t\, dy$$

$$\epsilon_0\, t\left(\frac{E_2 + E_1}{2}\right) w d = \epsilon_0\, t\left(\frac{E_2 - E_1}{3}w^2 + \frac{E_1}{2}w^2\right)$$

$$\left(\frac{E_2 + E_1}{2}\right) d = \frac{1}{6}(2E_2 + E_1) w$$

$$d = \left(\frac{2\,E_2 + E}{3(E_2 + E_1)}\right) w \qquad \textbf{Ans.}$$

Ans:

$$d = \left(\frac{2E_2 + E_1}{3(E_2 + E_1)}\right) w$$

4–87. Determine the maximum normal stress developed in the bar when it is subjected to a tension of $P = 8$ kN.

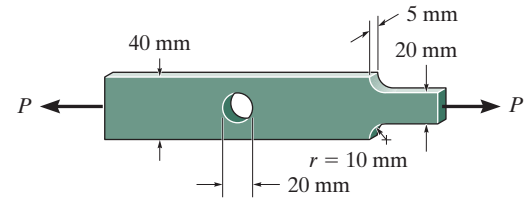

For the fillet:

$$\frac{w}{h} = \frac{40}{20} = 2 \qquad \frac{r}{h} = \frac{10}{20} = 0.5$$

From Fig. 4–23, $K = 1.4$

$$\sigma_{max} = K\sigma_{avg}$$

$$= 1.4\left(\frac{8\,(10^3)}{0.02\,(0.005)}\right)$$

$$= 112 \text{ MPa}$$

For the hole:

$$\frac{2r}{w} = \frac{20}{40} = 0.5$$

From Fig. 4–24, $K = 2.1$

$$\sigma_{max} = K\sigma_{avg}$$

$$= 2.1\left(\frac{8\,(10^3)}{(0.04 - 0.02)(0.005)}\right)$$

$$= 168 \text{ MPa}$$ **Ans.**

Ans:
$\sigma_{max} = 168$ MPa

***4–88.** If the allowable normal stress for the bar is $\sigma_{allow} = 120$ MPa, determine the maximum axial force P that can be applied to the bar.

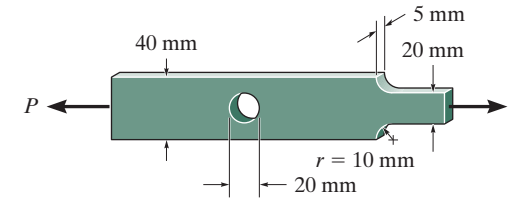

Assume failure of the fillet.

$$\frac{w}{h} = \frac{40}{20} = 2; \qquad \frac{r}{h} = \frac{10}{20} = 0.5$$

From Fig. 4–23. $K = 1.4$

$$\sigma_{allow} = \sigma_{max} = K\sigma_{avg}$$

$$120(10^6) = 1.4\left(\frac{P}{0.02(0.005)}\right)$$

$$P = 8.57 \text{ kN}$$

Assume failure of the hole.

$$\frac{2r}{w} = \frac{20}{40} = 0.5$$

From Fig. 4–24. $K = 2.1$

$$\sigma_{allow} = \sigma_{max} = K\sigma_{avg}$$

$$120(10^4) = 2.1\left(\frac{P}{(0.04 - 0.02)(0.005)}\right)$$

$$P = 5.71 \text{ kN (controls)}$$ **Ans.**

4–89. The steel bar has the dimensions shown. Determine the maximum axial force P that can be applied so as not to exceed an allowable tensile stress of $\sigma_{allow} = 150$ MPa.

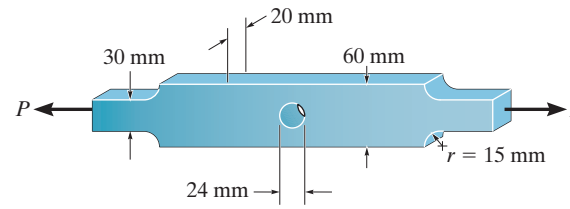

Assume failure occurs at the fillet:

$$\frac{w}{h} = \frac{60}{30} = 2 \quad \text{and} \quad \frac{r}{h} = \frac{15}{30} = 0.5$$

From the text, $K = 1.4$

$$\sigma_{max} = \sigma_{allow} = K\sigma_{avg}$$

$$150(10^6) = 1.4\left[\frac{P}{0.03(0.02)}\right]$$

$$P = 64.3 \text{ kN}$$

Assume failure occurs at the hole:

$$\frac{2r}{w} = \frac{24}{60} = 0.4$$

From the text, $K = 2.2$

$$\sigma_{max} = \sigma_{allow} = K\sigma_{avg}$$

$$150(10^6) = 2.2\left[\frac{P}{(0.06 - 0.024)(0.02)}\right]$$

$$P = 49.1 \text{ kN (controls!)}$$ **Ans.**

Ans:
$P = 49.1$ kN

4–90. Determine the maximum axial force P that can be applied to the steel plate. The allowable stress is $\sigma_{\text{allow}} = 21$ ksi.

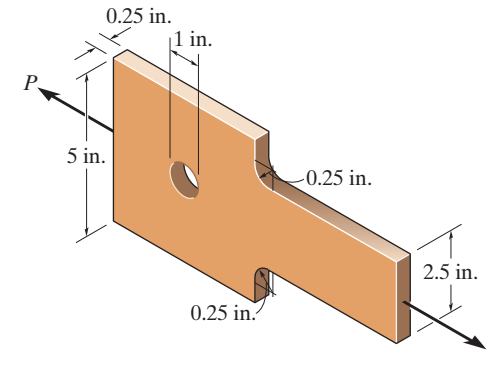

Assume failure at fillet

$$\frac{r}{h} = \frac{0.25}{2.5} = 0.1; \qquad \frac{w}{h} = \frac{5}{2.5} = 2$$

From Fig. 4–23, $K = 2.4$

$$\sigma_{\text{allow}} = \sigma_{\text{max}} = K\sigma_{\text{avg}}$$

$$21 = 2.4\left[\frac{P}{2.5(0.25)}\right]; \qquad P = 5.47 \text{ kip}$$

Assume failure at hole

$$\frac{2r}{w} = \frac{1}{5} = 0.2; \qquad \text{From Fig. 4–24, } K = 2.45$$

$$\sigma_{\text{allow}} = \sigma_{\text{max}} = K\sigma_{\text{avg}}$$

$$21 = 2.45\left[\frac{P}{(5 - 1)(0.25)}\right]$$

$$P = 8.57 \text{ kip}$$

$P = 5.47$ kip (controls) **Ans.**

Ans:
$P = 5.47$ kip

4–91. Determine the maximum axial force P that can be applied to the bar. The bar is made from steel and has an allowable stress of $\sigma_{allow} = 21$ ksi.

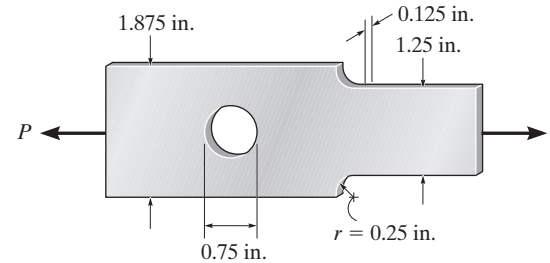

Assume failure of the fillet.

$$\frac{r}{h} = \frac{0.25}{1.25} = 0.2 \qquad \frac{w}{h} = \frac{1.875}{1.25} = 1.5$$

From Fig. 4–23, $K = 1.75$

$$\sigma_{allow} = \sigma_{max} = K\sigma_{avg}$$

$$21 = 1.75\left(\frac{P}{1.25\,(0.125)}\right)$$

$$P = 1.875 \text{ kip}$$

Assume failure of the hole.

$$\frac{2r}{w} = \frac{0.75}{1.875} = 0.40$$

From Fig. 4–24, $K = 2.2$

$$\sigma_{allow} = \sigma_{max} = K\sigma_{avg}$$

$$21 = 2.2\left(\frac{P}{(1.875 - 0.75)(0.125)}\right)$$

$$P = 1.34 \text{ kip} \quad \text{(controls)}$$ **Ans.**

Ans:
$P = 1.34$ kip

***4–92.** Determine the maximum normal stress developed in the bar when it is subjected to a tension of $P = 2$ kip.

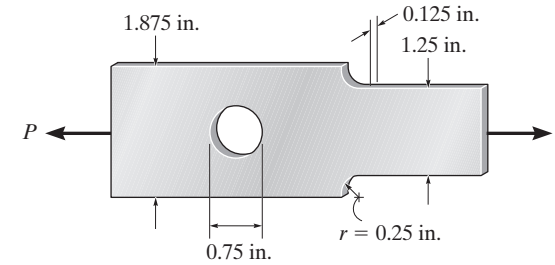

At fillet:

$$\frac{r}{h} = \frac{0.25}{1.25} = 0.2 \qquad \frac{w}{h} = \frac{1.875}{1.25} = 1.5$$

From Fig. 4–23, $K = 1.75$

$$\sigma_{\max} = K\left(\frac{P}{A}\right) = 1.75\left[\frac{2}{1.25(0.125)}\right] = 22.4 \text{ ksi}$$

At hole:

$$\frac{2r}{w} = \frac{0.75}{1.875} = 0.40$$

From Fig. 4–24, $K = 2.2$

$$\sigma_{\max} = 2.2\left[\frac{2}{(1.875 - 0.75)(0.125)}\right] = 31.3 \text{ ksi} \quad \text{(controls)} \qquad \textbf{Ans.}$$

4–93. Determine the maximum normal stress developed in the bar when it is subjected to a tension of $P = 8$ kN.

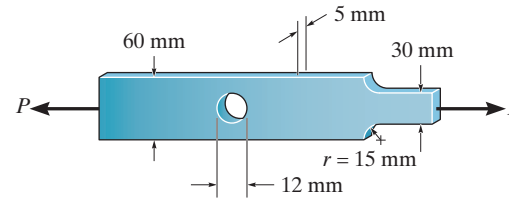

Maximum Normal Stress at fillet:

$$\frac{r}{h} = \frac{15}{30} = 0.5 \qquad \text{and} \qquad \frac{w}{h} = \frac{60}{30} = 2$$

From the text, $K = 1.4$

$$\sigma_{max} = K\sigma_{avg} = K\frac{P}{h\,t}$$

$$= 1.4\left[\frac{8(10^3)}{(0.03)(0.005)}\right] = 74.7 \text{ MPa}$$

Maximum Normal Stress at the hole:

$$\frac{2r}{w} = \frac{12}{60} = 0.2$$

From the text, $K = 2.45$

$$\sigma_{max} = K\sigma_{avg} = K\frac{P}{(w - 2r)\,t}$$

$$= 2.45\left[\frac{8(10^3)}{(0.06 - 0.012)(0.005)}\right]$$

$$= 81.7 \text{ MPa} \quad \text{(controls)}$$ **Ans.**

Ans:
$\sigma_{max} = 81.7$ MPa

4–94. The resulting stress distribution along section AB for the bar is shown. From this distribution, determine the approximate resultant axial force P applied to the bar. Also, what is the stress-concentration factor for this geometry?

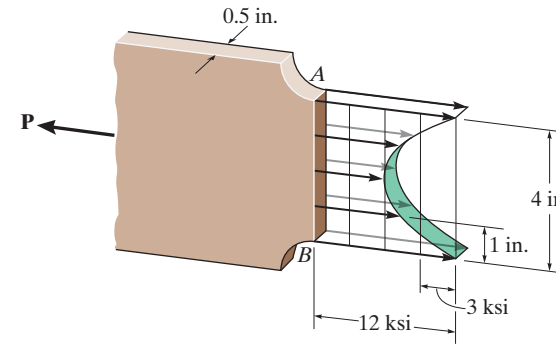

$$P = \int \sigma dA = \text{Volume under curve}$$

Number of squares = 10

$$P = 10(3)(1)(0.5) = 15 \text{ kip}$$ **Ans.**

$$\sigma_{avg} = \frac{P}{A} = \frac{15 \text{ kip}}{(4 \text{ in.})(0.5 \text{ in.})} = 7.5 \text{ ksi}$$

$$K = \frac{\sigma_{max}}{\sigma_{avg}} = \frac{12 \text{ ksi}}{7.5 \text{ ksi}} = 1.60$$ **Ans.**

Ans:
$P = 15$ kip, $K = 1.60$

4–95. The 10-mm-diameter shank of the steel bolt has a bronze sleeve bonded to it. The outer diameter of this sleeve is 20 mm. If the yield stress for the steel is $(\sigma_Y)_{st} = 640$ MPa, and for the bronze $(\sigma_Y)_{br} = 520$ MPa, determine the largest possible value of P that can be applied to the bolt. Assume the materials to be elastic perfectly plastic. $E_{st} = 200$ GPa, $E_{br} = 100$ GPa.

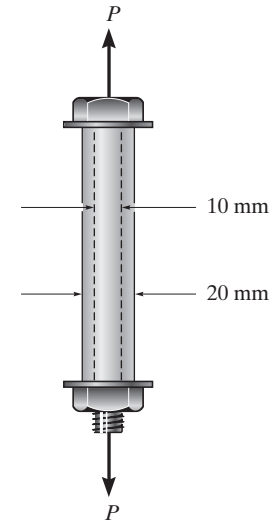

$$+\uparrow \Sigma F_y = 0: \qquad P - P_b - P_s = 0 \qquad (1)$$

The largest possible P that can be applied is when P causes both bolt and sleeve to yield. Hence,

$$P_b = (\sigma_{st})\gamma A_b = 640(10^6)(\frac{\pi}{4})(0.01^2) = 50.265 \text{ kN}$$

$$P_s = (\sigma_{br})\gamma A_s = 520(10^6)(\frac{\pi}{4})(0.02^2 - 0.01^2)$$

$$= 122.52 \text{ kN}$$

From Eq. (1).

$$P = 50.265 + 122.52 = 173 \text{ kN} \qquad \textbf{Ans.}$$

Ans:
$P = 173$ kN

***4–96.** The 10-mm-diameter shank of the steel bolt has a bronze sleeve bonded to it. The outer diameter of this sleeve is 20 mm. If the yield stress for the steel is $(\sigma_Y)_{st} = 640$ MPa and for the bronze $(\sigma_Y)_{br} = 520$ MPa, determine the magnitude of the largest elastic load P that can be applied to the assembly. $E_{st} = 200$ GPa, $E_{br} = 100$ GPa.

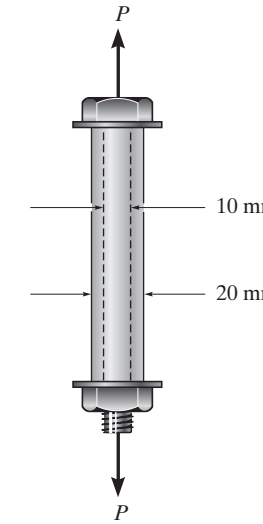

$$+\uparrow \Sigma F_y = 0; \qquad P - P_b - P_s = 0 \qquad (1)$$

$$\Delta_b = \Delta_s; \quad \frac{P_b(L)}{\frac{\pi}{4}(0.01^2)(200)(10^9)} = \frac{P_s(L)}{\frac{\pi}{4}(0.02^2 - 0.01^2)(100)(10^9)}$$

$$P_b = 0.6667\, P_s \qquad (2)$$

Assume yielding of the bolt:

$$P_b = (\sigma_{st})\gamma A_b = 640(10^6)\left(\frac{\pi}{4}\right)(0.01^2) = 50.265 \text{ kN}$$

Using $P_b = 50.265$ kN and solving Eqs. (1) and (2):

$P_s = 75.40$ kN: $\qquad P = 125.66$ kN

Assume yielding of the sleeve:

$$P_s = (\sigma_\gamma)_{br} A_s = 520(10^6)\left(\frac{\pi}{4}\right)(0.02^2 - 0.01^2) = 122.52 \text{ kN}$$

Use $P_s = 122.52$ kN and solving Eqs. (1) and (2):

$P_b = 81.68$ kN $\qquad P = 204.20$ kN

$P = 126$ kN (controls) **Ans.**

4–97. The weight is suspended from steel and aluminum wires, each having the same initial length of 3 m and cross-sectional area of 4 mm^2. If the materials can be assumed to be elastic perfectly plastic, with $(\sigma_Y)_{st} = 120$ MPa and $(\sigma_Y)_{al} = 70$ MPa, determine the force in each wire if the weight is (a) 600 N and (b) 720 N. $E_{al} = 70$ GPa, $E_{st} = 200$ GPa.

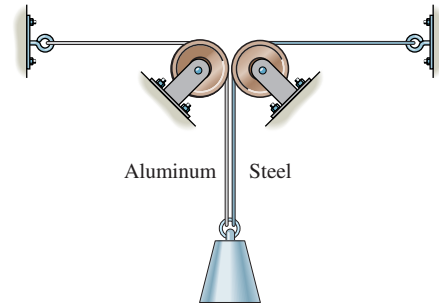

$$+\uparrow \Sigma F_y = 0; \qquad F_{al} + F_{st} - W = 0 \qquad (1)$$

Assume both wires behave elastically.

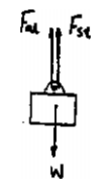

$$\delta_{al} = \delta_{st}; \qquad \frac{F_{al}L}{A(70)} = \frac{F_{st}L}{A(200)}$$

$$F_{al} = 0.35\, F_{st} \qquad (2)$$

(a) When $W = 600$ N. solving Eqs. (1) and (2) yields:

$F_{st} = 444.44$ N $= 444$ N **Ans.**

$F_{al} = 155.55$ N $= 156$ N **Ans.**

$$\sigma_{al} = \frac{F_{al}}{A_{st}} = \frac{155.55}{4(10^{-6})} = 38.88 \text{ MPa} < (\sigma_\gamma)_{al} = 70 \text{ MPa} \qquad \textbf{OK}$$

$$\sigma_{st} = \frac{F_{st}}{A_{st}} = \frac{444.44}{4(10^{-6})} = 111.11 \text{ MPa} < (\sigma_\gamma)_{st} = 120 \text{ MPa} \qquad \textbf{OK}$$

The elastic analysis is valid for both wires.

(b) When $W = 720$ N. solving Eqs. (1) and (2) yields:

$F_{st} = 533.33$ N: $\quad F_{st} = 186.67$ N

$$\sigma_{al} = \frac{F_{al}}{A_{al}} = \frac{186.67}{4(10^{-6})} = 46.67 \text{ MPa} < (\sigma_\gamma)_{al} = 70 \text{ MPa} \qquad \textbf{OK}$$

$$\sigma_{st} = \frac{F_{st}}{A_{st}} = \frac{533.33}{4(10^{-6})} = 133.33 \text{ MPa} > (\sigma_\gamma)_{st} = 120 \text{ MPa}$$

Therefore, the steel wire yields. Hence,

$F_{st} = (\sigma_\gamma)_{st} A_{st} = 120(10^6)(4)(10^{-6}) = 480$ N **Ans.**

From Eq. (1). $F_{al} = 240$ N **Ans.**

$$\sigma_{al} = \frac{240}{4(10^{-6})} = 60 \text{ MPa} < (\sigma_\gamma)_{al} \qquad \textbf{OK}$$

Ans:
(a) $F_{st} = 444$ N, $F_{al} = 156$ N,
(b) $F_{st} = 480$ N, $F_{al} = 240$ N

4–98. The bar has a cross-sectional area of 0.5 in^2 and is made of a material that has a stress–strain diagram that can be approximated by the two line segments shown. Determine the elongation of the bar due to the applied loading.

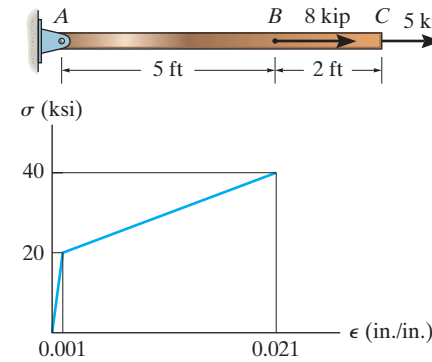

Average Normal Stress and Strain: For segment BC

$$\sigma_{BC} = \frac{P_{BC}}{A_{BC}} = \frac{5}{0.5} = 10.0 \text{ ksi}$$

$$\frac{10.0}{\epsilon_{BC}} = \frac{20}{0.001}; \qquad \epsilon_{BC} = \frac{0.001}{20}(10.0) = 0.00050 \text{ in./in.}$$

Average Normal Stress and Strain: For segment AB

$$\sigma_{AB} = \frac{P_{AB}}{A_{AB}} = \frac{13}{0.5} = 26.0 \text{ ksi}$$

$$\frac{26.0 - 20}{\epsilon_{AB} - 0.001} = \frac{40 - 20}{0.021 - 0.001}$$

$$\epsilon_{AB} = 0.0070 \text{ in./in.}$$

Elongation:

$$\delta_{BC} = \epsilon_{BC} L_{BC} = 0.00050(2)(12) = 0.0120 \text{ in.}$$

$$\delta_{AB} = \epsilon_{AB} L_{AB} = 0.0070(5)(12) = 0.420 \text{ in.}$$

$$\delta_{\text{Tot}} = \delta_{BC} + \delta_{AB} = 0.0120 + 0.420 = 0.432 \text{ in.} \qquad \textbf{Ans.}$$

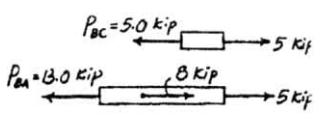

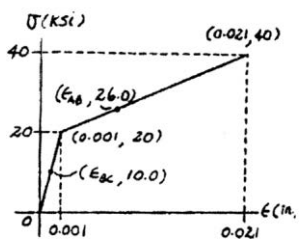

Ans:
$\delta_{\text{Tot}} = 0.432$ in.

4–99. The rigid beam is supported by a pin at A and two steel wires, each having a diameter of 4 mm. If the yield stress for the wires is $\sigma_Y = 530$ MPa, and $E_{st} = 200$ GPa, determine the intensity of the distributed load w that can be placed on the beam and will just cause wire EB to yield. What is the displacement of point G for this case? For the calculation, assume that the steel is elastic perfectly plastic.

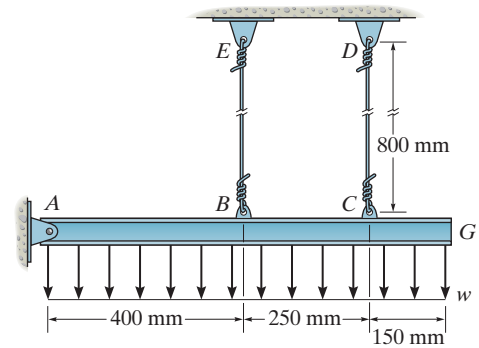

Equations of Equilibrium:

$$\circlearrowleft + \Sigma M_A = 0; \qquad F_{BE}(0.4) + F_{CD}(0.65) - 0.8w\,(0.4) = 0$$

$$0.4\,F_{BE} + 0.65F_{CD} = 0.32w \qquad (1)$$

Plastic Analysis: Wire CD will yield first followed by wire BE. When both wires yield

$$F_{BE} = F_{CD} = (\sigma_\gamma)A$$

$$= 530\left(10^6\right)\left(\frac{\pi}{4}\right)\left(0.004^2\right) = 6.660 \text{ kN}$$

Substituting the results into Eq. (1) yields:

$$w = 21.9 \text{ kN/m} \qquad \textbf{Ans.}$$

Displacement: When wire BE achieves yield stress, the corresponding yield strain is

$$\epsilon_\gamma = \frac{\sigma_\gamma}{E} = \frac{530(10^6)}{200(10^9)} = 0.002650 \text{ mm/mm}$$

$$\delta_{BE} = \epsilon_\gamma L_{BE} = 0.002650(800) = 2.120 \text{ mm}$$

From the geometry

$$\frac{\delta_G}{0.8} = \frac{\delta_{BE}}{0.4}$$

$$\delta_G = 2\delta_{BE} = 2(2.120) = 4.24 \text{ mm} \qquad \textbf{Ans.}$$

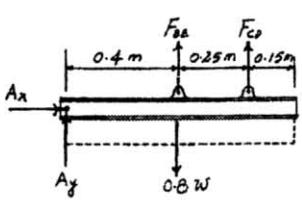

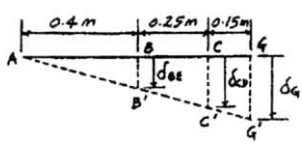

Ans:
$w = 21.9$ kN/m, $\delta_G = 4.24$ mm

***4–100.** The rigid beam is supported by a pin at A and two steel wires, each having a diameter of 4 mm. If the yield stress for the wires is $\sigma_Y = 530$ MPa, and $E_{st} = 200$ GPa, determine (a) the intensity of the distributed load w that can be placed on the beam that will cause only one of the wires to start to yield and (b) the smallest intensity of the distributed load that will cause both wires to yield. For the calculation, assume that the steel is elastic perfectly plastic.

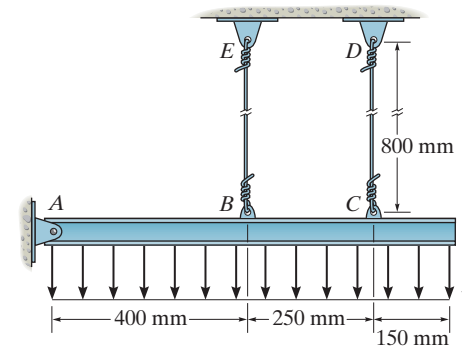

Equations of Equilibrium:

$$\circlearrowleft + \Sigma M_A = 0; \qquad F_{BE}(0.4) + F_{CD}(0.65) - 0.8w\,(0.4) = 0$$

$$0.4\,F_{BE} + 0.65\,F_{CD} = 0.32w \qquad (1)$$

(a) By observation, wire CD will yield first.

Then $F_{CD} = \sigma_\gamma A = 530\left(10^6\right)\left(\frac{\pi}{4}\right)\left(0.004^2\right) = 6.660$ kN.

From the geometry

$$\frac{\delta_{BE}}{0.4} = \frac{\delta_{CD}}{0.65}; \qquad \delta_{CD} = 1.625\delta_{BE}$$

$$\frac{F_{CD}L}{AE} = 1.625\,\frac{F_{BE}L}{AE}$$

$$F_{CD} = 1.625\,F_{BE} \qquad (2)$$

Using $F_{CD} = 6.660$ kN and solving Eqs. (1) and (2) yields:

$$F_{BE} = 4.099 \text{ kN}$$

$$w = 18.7 \text{ kN/m} \qquad \textbf{Ans.}$$

(b) When both wires yield

$$F_{BE} = F_{CD} = (\sigma_\gamma)A$$

$$= 530\left(10^6\right)\left(\frac{\pi}{4}\right)\left(0.004^2\right) = 6.660 \text{ kN}$$

Substituting the results into Eq. (1) yields:

$$w = 21.9 \text{ kN/m} \qquad \textbf{Ans.}$$

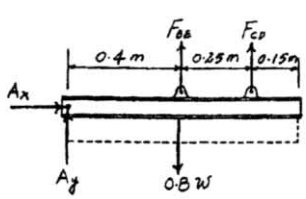

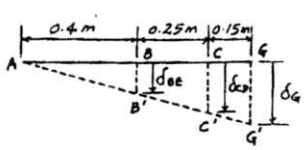

4–101. The rigid lever arm is supported by two A-36 steel wires having the same diameter of 4 mm. If a force of $P = 3$ kN is applied to the handle, determine the force developed in both wires and their corresponding elongations. Consider A-36 steel as an elastic perfectly plastic material.

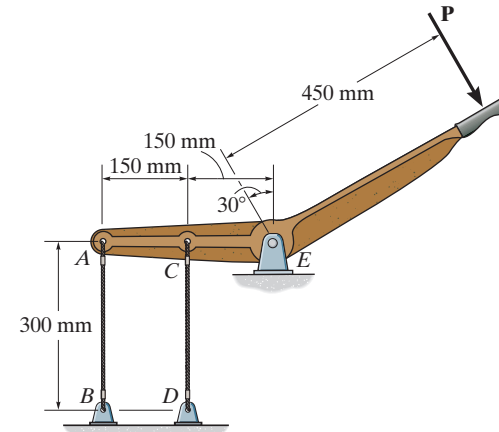

Equation of Equilibrium. Referring to the free-body diagram of the lever shown in Fig. *a*,

$$\circlearrowleft + \Sigma M_E = 0; \qquad F_{AB}(300) + F_{CD}(150) - 3(10^3)(450) = 0$$

$$2F_{AB} + F_{CD} = 9(10^3) \qquad (1)$$

Elastic Analysis. Assuming that both wires AB and CD behave as linearly elastic, the compatibility equation can be written by referring to the geometry of Fig. *b*.

$$\delta_{AB} = \left(\frac{300}{150}\right)\delta_{CD}$$

$$\delta_{AB} = 2\delta_{CD} \qquad (2)$$

$$\frac{F_{AB}L}{AE} = 2\left(\frac{F_{CD}L}{AE}\right)$$

$$F_{AB} = 2F_{CD} \qquad (3)$$

Solving Eqs. (1) and (3),

$$F_{CD} = 1800\,\text{N} \qquad\qquad F_{AB} = 3600\,\text{N}$$

Normal Stress.

$$\sigma_{CD} = \frac{F_{CD}}{A_{CD}} = \frac{1800}{\frac{\pi}{4}(0.004^2)} = 143.24\ \text{MPa} < (\sigma_Y)_{\text{st}} \qquad \textbf{(O.K.)}$$

$$\sigma_{AB} = \frac{F_{AB}}{A_{AB}} = \frac{3600}{\frac{\pi}{4}(0.004^2)} = 286.48\ \text{MPa} > (\sigma_Y)_{\text{st}} \qquad \textbf{(N.G.)}$$

Since wire AB yields, the elastic analysis is not valid. The solution must be reworked using

$$F_{AB} = (\sigma_Y)_{\text{st}}\,A_{AB} = 250(10^6)\left[\frac{\pi}{4}(0.004^2)\right]$$

$$= 3141.59\,\text{N} = 3.14\,\text{kN} \qquad \textbf{Ans.}$$

Substituting this result into Eq. (1),

$$F_{CD} = 2716.81\,\text{N} = 2.72\ \text{kN} \qquad \textbf{Ans.}$$

$$\sigma_{CD} = \frac{F_{CD}}{A_{CD}} = \frac{2716.81}{\frac{\pi}{4}(0.004^2)} = 216.20\ \text{MPa} < (\sigma_Y)_{\text{st}} \qquad \textbf{(O.K.)}$$

4–101. Continued

Since wire CD is linearly elastic, its elongation can be determined by

$$\delta_{CD} = \frac{F_{CD}L_{CD}}{A_{CD}E_{st}} = \frac{2716.81(300)}{\frac{\pi}{4}(0.004^2)(200)(10^9)}$$

$$= 0.3243 \text{ mm} = 0.324 \text{ mm} \qquad \textbf{Ans.}$$

From Eq. (2),

$$\delta_{AB} = 2\delta_{CD} = 2(0.3243) = 0.649 \text{ mm} \qquad \textbf{Ans.}$$

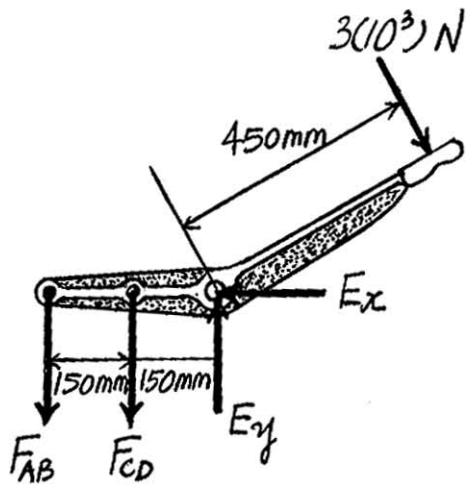

(a)

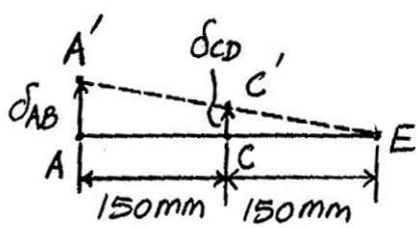

(b)

Ans:
$F_{AB} = 3.14$ kN, $F_{CD} = 2.72$ kN,
$\delta_{CD} = 0.324$ mm, $\delta_{AB} = 0.649$ mm

4–102. The rigid lever arm is supported by two A-36 steel wires having the same diameter of 4 mm. Determine the smallest force **P** that will cause (a) only one of the wires to yield; (b) both wires to yield. Consider A-36 steel as an elastic perfectly plastic material.

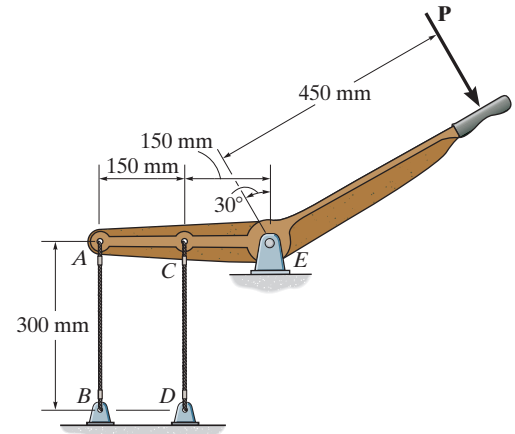

Equation of Equilibrium. Referring to the free-body diagram of the lever arm shown in Fig. *a*,

$$\circlearrowleft + \Sigma M_E = 0; \qquad F_{AB}(300) + F_{CD}(150) - P(450) = 0$$

$$2F_{AB} + F_{CD} = 3P \qquad (1)$$

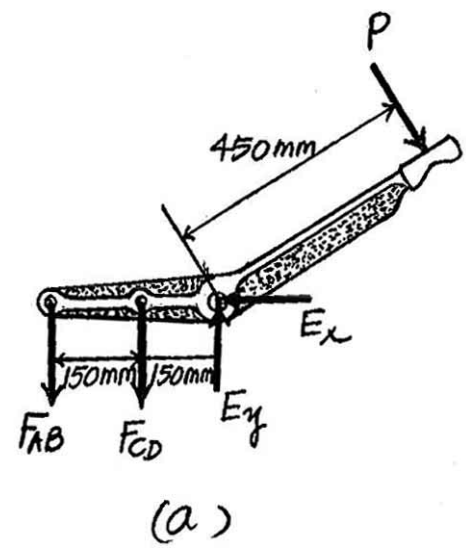

(a) Elastic Analysis. The compatibility equation can be written by referring to the geometry of Fig. *b*.

$$\delta_{AB} = \left(\frac{300}{150}\right)\delta_{CD}$$

$$\delta_{AB} = 2\delta_{CD}$$

$$\frac{F_{AB}L}{AE} = 2\left(\frac{F_{CD}L}{AE}\right)$$

$$F_{CD} = \frac{1}{2}F_{AB} \qquad (2)$$

Assuming that wire AB is about to yield first,

$$F_{AB} = (\sigma_Y)_{st}\, A_{AB} = 250\left(10^6\right)\left[\frac{\pi}{4}\left(0.004^2\right)\right] = 3141.59\,\text{N}$$

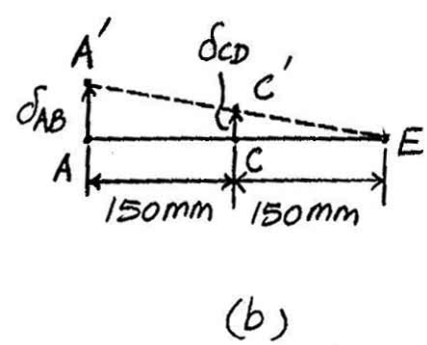

From Eq. (2),

$$F_{CD} = \frac{1}{2}(3141.59) = 1570.80\,\text{N}$$

Substituting the result of F_{AB} and F_{CD} into Eq. (1),

$$P = 2618.00\,\text{N} = 2.62\,\text{kN} \qquad \textbf{Ans.}$$

(b) Plastic Analysis. Since both wires AB and CD are required to yield,

$$F_{AB} = F_{CD} = (\sigma_Y)_{st}\, A = 250\left(10^6\right)\left[\frac{\pi}{4}\left(0.004^2\right)\right] = 3141.59\,\text{N}$$

Substituting this result into Eq. (1),

$$P = 3141.59\ \text{N} = 3.14\ \text{kN} \qquad \textbf{Ans.}$$

Ans:
(a) $P = 2.62\,\text{kN}$, (b) $P = 3.14\ \text{kN}$

4–103. Two steel wires, each having a cross-sectional area of 2 mm^2 are tied to a ring at C, and then stretched and tied between the two pins A and B. The initial tension in the wires is 50 N. If a horizontal force **P** is applied to the ring, determine the force in each wire if $P = 20$ N. What is the smallest force P that must be applied to the ring to reduce the force in wire CB to zero? Take $\sigma_Y = 300$ MPa. $E_{st} = 200$ GPa.

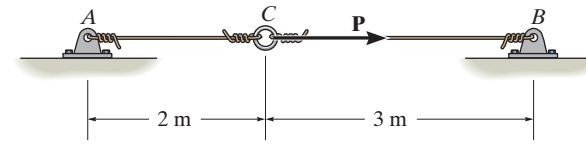

Equilibrium:

$\xrightarrow{+} \Sigma Fx = 0: \quad 20 + (50 - P_2) - (50 + P_1) = 0$

$$P_1 + P_2 = 20 \qquad (1)$$

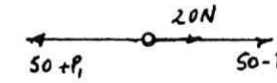

Compatibility Condition:

$$\delta_C = \frac{P_1(2)}{AE} = \frac{P_2(3)}{AE}$$

$$P_1 = 1.5\,P_2 \qquad (2)$$

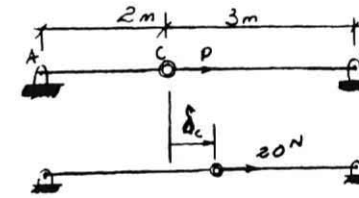

Solving Eqs. (1) and (2) yields:

$P_1 = 12$ N, $\quad P_2 = 8$ N

$F_{AC} = 50 + 12 = 62$ N **Ans.**

$F_{BC} = 50 - 8 = 42$ N **Ans.**

For $F_{CB} = 0$; $\quad 50 - P_2 = 0$

$P_2 = 50$ N

$P_1 = 1.5(50) = 75$ N

$P = 75 + 50 = 125$ N **Ans.**

$F_{At} = 50 + 75 = 125$ N

$$\sigma_{At} = \frac{125}{2(10^{-6})} = 62.5 \text{ MPa}$$

62.5 MPa $< \sigma\gamma$ **OK**

Ans:
$F_{AC} = 62$ N, $F_{BC} = 42$ N, $P = 125$ N

***4–104.** The rigid beam is supported by three 25-mm diameter A-36 steel rods. If the beam supports the force of $P = 230$ kN, determine the force developed in each rod. Consider the steel to be an elastic perfectly plastic material.

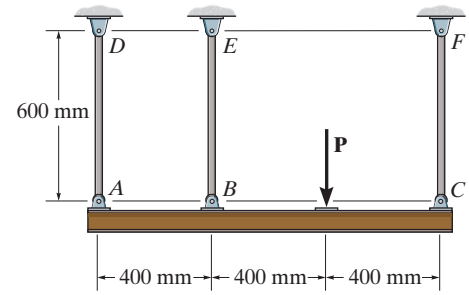

Equation of Equilibrium. Referring to the free-body diagram of the beam shown in Fig. *a*,

$$+\uparrow \Sigma F_y = 0; \qquad F_{AD} + F_{BE} + F_{CF} - 230(10^3) = 0 \qquad (1)$$

$$\circlearrowleft + \Sigma M_A = 0; \qquad F_{BE}(400) + F_{CF}(1200) - 230(10^3)(800) = 0$$

$$F_{BE} + 3F_{CF} = 460(10^3) \qquad (2)$$

Elastic Analysis. Referring to the deflection diagram of the beam shown in Fig. *b*, the compatibility equation can be written as

$$\delta_{BE} = \delta_{AD} + \left(\frac{\delta_{CF} - \delta_{AD}}{1200}\right)(400)$$

$$\delta_{BE} = \frac{2}{3}\delta_{AD} + \frac{1}{3}\delta_{CF}$$

$$\frac{F_{BE}L}{AE} = \frac{2}{3}\left(\frac{F_{AD}L}{AE}\right) + \frac{1}{3}\left(\frac{F_{CF}L}{AE}\right)$$

$$F_{BE} = \frac{2}{3}F_{AD} + \frac{1}{3}F_{CF} \qquad (3)$$

Solving Eqs. (1), (2), and (3)

$$F_{CF} = 131\,428.57 \text{ N} \qquad F_{BE} = 65\,714.29 \text{ N} \quad F_{AD} = 32\,857.14 \text{ N}$$

Normal Stress.

$$\sigma_{CF} = \frac{F_{CF}}{A_{CF}} = \frac{131428.57}{\frac{\pi}{4}(0.025^2)} = 267.74 \text{ MPa} > (\sigma_Y)_{st} \qquad \textbf{(N.G.)}$$

$$\sigma_{BE} = \frac{F_{BE}}{A_{BE}} = \frac{65714.29}{\frac{\pi}{4}(0.025^2)} = 133.87 \text{ MPa} < (\sigma_Y)_{st} \qquad \textbf{(O.K.)}$$

$$\sigma_{AD} = \frac{F_{AD}}{A_{AD}} = \frac{32857.14}{\frac{\pi}{4}(0.025^2)} = 66.94 \text{ MPa} < (\sigma_Y)_{st} \qquad \textbf{(O.K.)}$$

Since rod *CF* yields, the elastic analysis is not valid. The solution must be reworked using

$$F_{CF} = (\sigma_Y)_{st} A_{CF} = 250(10^6)\left[\frac{\pi}{4}(0.025^2)\right] = 122\,718.46 \text{ N} = 123 \text{ kN} \qquad \textbf{Ans.}$$

4–104. Continued

Substituting this result into Eq. (2),

$$F_{BE} = 91844.61 \text{ N} = 91.8 \text{ kN}$$ **Ans.**

Substituting the result for F_{CF} and F_{BE} into Eq. (1),

$$F_{AD} = 15436.93 \text{ N} = 15.4 \text{ kN}$$ **Ans.**

$$\sigma_{BE} = \frac{F_{BE}}{A_{BE}} = \frac{91844.61}{\frac{\pi}{4}(0.025^2)} = 187.10 \text{ MPa} < (\sigma_Y)_{st}$$ **(O.K.)**

$$\sigma_{AD} = \frac{F_{AD}}{A_{AD}} = \frac{15436.93}{\frac{\pi}{4}(0.025^2)} = 31.45 \text{ MPa} < (\sigma_Y)_{st}$$ **(O.K.)**

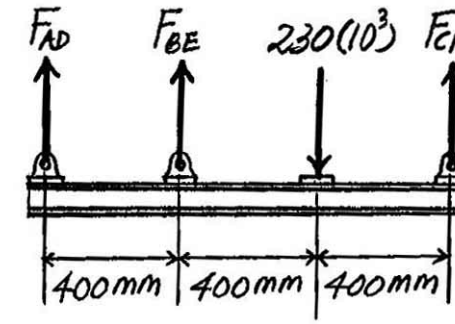

(a)

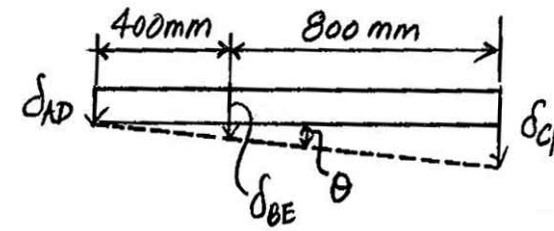

(b)

4–105. The rigid beam is supported by three 25-mm diameter A-36 steel rods. If the force of $P = 230$ kN is applied on the beam and removed, determine the residual stresses in each rod. Consider the steel to be an elastic perfectly plastic material.

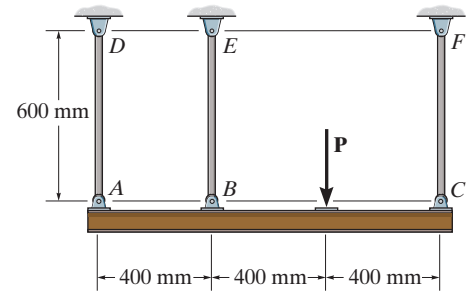

Equation of Equilibrium. Referring to the free-body diagram of the beam shown in Fig. *a*,

$$+\uparrow \Sigma F_y = 0; \qquad F_{AD} + F_{BE} + F_{CF} - 230(10^3) = 0 \tag{1}$$

$$\circlearrowleft + \Sigma M_A = 0; \qquad F_{BE}(400) + F_{CF}(1200) - 230(10^3)(800) = 0$$

$$F_{BE} + 3F_{CF} = 460(10^3) \tag{2}$$

Elastic Analysis. Referring to the deflection diagram of the beam shown in Fig. *b*, the compatibility equation can be written as

$$\delta_{BE} = \delta_{AD} + \left(\frac{\delta_{CF} - \delta_{AD}}{1200}\right)(400)$$

$$\delta_{BE} = \frac{2}{3}\delta_{AD} + \frac{1}{3}\delta_{CF} \tag{3}$$

$$\frac{F_{BE}L}{AE} = \frac{2}{3}\left(\frac{F_{AD}L}{AE}\right) + \frac{1}{3}\left(\frac{F_{CF}L}{AE}\right)$$

$$F_{BE} = \frac{2}{3}F_{AD} + \frac{1}{3}F_{CF} \tag{4}$$

Solving Eqs. (1), (2), and (4)

$$F_{CF} = 131428.57 \text{ N} \qquad F_{BE} = 65714.29 \text{ N} \qquad F_{AD} = 32857.14 \text{ N}$$

Normal Stress.

$$\sigma_{CF} = \frac{F_{CF}}{A_{CF}} = \frac{131428.57}{\frac{\pi}{4}(0.025^2)} = 267.74 \text{ MPa (T)} > (\sigma_Y)_{st} \qquad \textbf{(N.G.)}$$

$$\sigma_{BE} = \frac{F_{BE}}{A_{BE}} = \frac{65714.29}{\frac{\pi}{4}(0.025^2)} = 133.87 \text{ MPa (T)} < (\sigma_Y)_{st} \qquad \textbf{(O.K.)}$$

$$\sigma_{AD} = \frac{F_{AD}}{A_{AD}} = \frac{32857.14}{\frac{\pi}{4}(0.025^2)} = 66.94 \text{ MPa (T)} < (\sigma_Y)_{st} \qquad \textbf{(O.K.)}$$

Since rod *CF* yields, the elastic analysis is not valid. The solution must be reworked using

$$\sigma_{CF} = (\sigma_Y)_{st} = 250 \text{ MPa (T)}$$

$$F_{CF} = \sigma_{CF} A_{CF} = 250(10^6)\left[\frac{\pi}{4}(0.025^2)\right] = 122718.46 \text{ N}$$

4–105. Continued

Substituting this result into Eq. (2),

$$F_{BE} = 91844.61 \text{ N}$$

Substituting the result for F_{CF} and F_{BE} into Eq. (1),

$$F_{AD} = 15436.93 \text{ N}$$

$$\sigma_{BE} = \frac{F_{BE}}{A_{BE}} = \frac{91844.61}{\frac{\pi}{4}(0.025^2)} = 187.10 \text{ MPa (T)} < (\sigma_Y)_{st} \qquad \textbf{(O.K.)}$$

$$\sigma_{AD} = \frac{F_{AD}}{A_{AD}} = \frac{15436.93}{\frac{\pi}{4}(0.025^2)} = 31.45 \text{ MPa (T)} < (\sigma_Y)_{st} \qquad \textbf{(O.K.)}$$

Residual Stresses. The process of removing **P** can be represented by applying the force **P′**, which has a magnitude equal to that of **P** but is opposite in sense. Since the process occurs in a linear manner, the corresponding normal stress must have the same magnitude but opposite sense to that obtained from the elastic analysis. Thus,

$$\sigma'_{CF} = 267.74 \text{ MPa (C)} \qquad \sigma'_{BE} = 133.87 \text{ MPa (C)} \qquad \sigma'_{AD} = 66.94 \text{ MPa (C)}$$

Considering the tensile stress as positive and the compressive stress as negative,

$$(\sigma_{CF})_r = \sigma_{CF} + \sigma'_{CF} = 250 + (-267.74) = -17.7 \text{ MPa} = 17.7 \text{ MPa (C)} \qquad \textbf{Ans.}$$

$$(\sigma_{BE})_r = \sigma_{BE} + \sigma'_{BE} = 187.10 + (-133.87) = 53.2 \text{ MPa (T)} \qquad \textbf{Ans.}$$

$$(\sigma_{AD})_r = \sigma_{AD} + \sigma'_{AD} = 31.45 + (-66.94) = -35.5 \text{ MPa} = 35.5 \text{ MPa (C)} \qquad \textbf{Ans.}$$

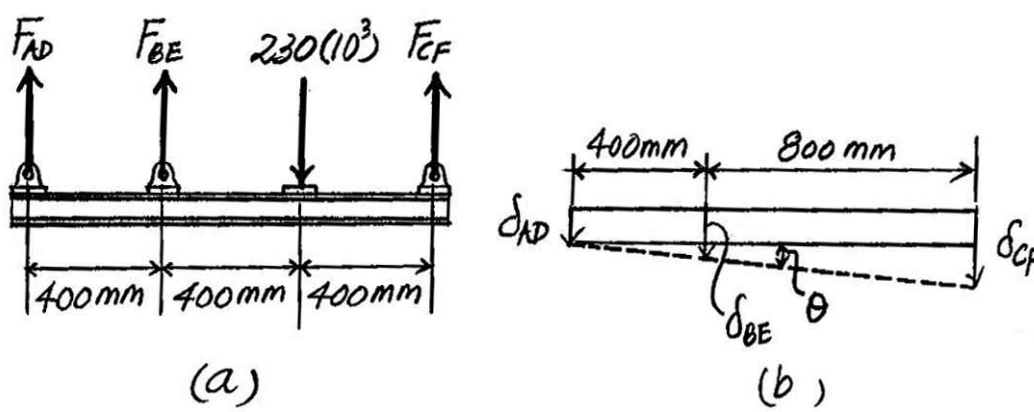

Ans:
$(\sigma_{CF})_r = 17.7$ MPa (C), $(\sigma_{BE})_r = 53.2$ MPa (T), $(\sigma_{AD})_r = 35.5$ MPa (C)

4–106. A material has a stress–strain diagram that can be described by the curve $\sigma = c\epsilon^{1/2}$. Determine the deflection of the end of a rod made from this material if it has a length L, cross-sectional area A, and a specific weight γ.

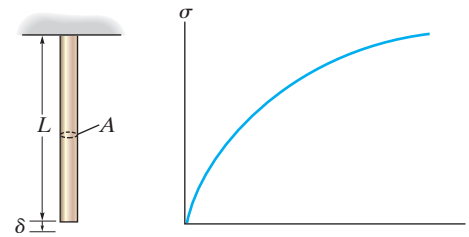

$\sigma = c\epsilon^{\frac{1}{2}}$: $\sigma^2 = c^2\epsilon$

$$\sigma^2(x) = c^2\epsilon(x) \qquad (1)$$

However $\sigma(x) = \dfrac{P(x)}{A}$; $\quad \varepsilon(x) = \dfrac{d\delta}{dx}$

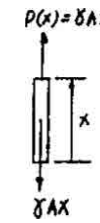

From Eq. (1),

$$\frac{P^2(x)}{A^2} = c^2\frac{d\delta}{dx}; \qquad \frac{d\delta}{dx} = \frac{P^2(x)}{A^2c^2}$$

$$\delta = \frac{1}{A^2c^2}\int P^2(x)\,dx = \frac{1}{A^2c^2}\int_0^L (\gamma Ax)^2 dx$$

$$= \frac{\gamma^2}{c^2}\int_0^L x^2 dx = \frac{\gamma^2}{c^2}\frac{x^3}{3}\bigg|_0^L$$

$$\delta = \frac{\gamma^2 L^3}{3c^2} \qquad \textbf{Ans.}$$

Ans:
$\delta = \dfrac{\gamma^2 L^3}{3c^2}$

4–107. Solve Prob. 4–106 if the stress–strain diagram is defined by $\sigma = c\epsilon^{3/2}$.

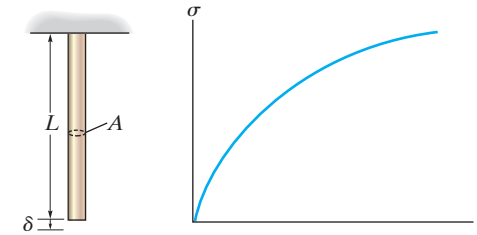

$$\sigma = c\epsilon^{\frac{3}{2}}: \qquad \epsilon = \frac{\sigma^{\frac{2}{3}}}{c^{\frac{2}{3}}} \tag{1}$$

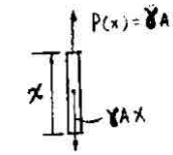

However $\sigma(x) = \dfrac{P(x)}{A}$; $\qquad \epsilon(x) = \dfrac{d\delta}{dx}$

From Eq. (1),

$$\frac{d\delta}{dx} = \frac{1}{c^{\frac{2}{3}}}\frac{P^{\frac{2}{3}}}{A^{\frac{2}{3}}}$$

$$\delta = \frac{1}{c^{\frac{2}{3}}A^{\frac{2}{3}}}\int P^{\frac{2}{3}}\,dx = \frac{1}{(cA)^{\frac{2}{3}}}\int_0^L (\gamma A x)^{\frac{2}{3}}dx$$

$$= \frac{1}{(cA)^{\frac{2}{3}}}(\gamma A)^{\frac{2}{3}}\int_0^L x^{\frac{2}{3}}dx = \left(\frac{\gamma}{c}\right)^{\frac{2}{3}}\left(\frac{3}{5}\right)x^{\frac{5}{3}}\Big|_0^L$$

$$\delta = \frac{3}{5}\left(\frac{\gamma}{c}\right)^{\frac{2}{3}}L^{\frac{5}{3}} \qquad \textbf{Ans.}$$

Ans:
$\delta = \dfrac{3}{5}\left(\dfrac{\gamma}{c}\right)^{\frac{2}{3}}L^{\frac{5}{3}}$

***4–108.** The rigid beam is supported by the three posts A, B, and C of equal length. Posts A and C have a diameter of 75 mm and are made of a material for which $E = 70$ GPa and $\sigma_Y = 20$ MPa. Post B has a diameter of 20 mm and is made of a material for which $E' = 100$ GPa and $\sigma_Y' = 590$ MPa. Determine the smallest magnitude of **P** so that (a) only rods A and C yield and (b) all the posts yield.

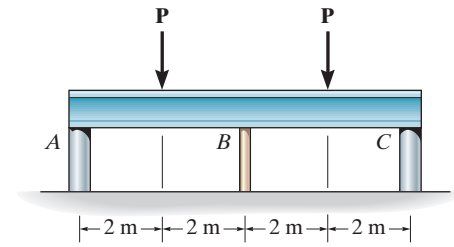

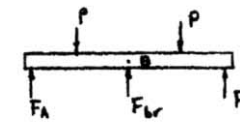

$\Sigma M_B = 0; \qquad F_A = F_C = F_{al}$

$+\uparrow \Sigma F_y = 0; \qquad F_{at} + 2F_{at} - 2P = 0 \qquad (1)$

(a) Post A and C will yield,

$$F_{al} = (\sigma_t)_{al} A$$
$$= 20(10^4)(\tfrac{\pi}{a})(0.075)^2$$
$$= 88.36 \text{ kN}$$

$$(E_{al})_r = \frac{(\sigma_r)_{al}}{E_{al}} = \frac{20(10^4)}{70(10^4)} = 0.0002857$$

Compatibility condition:

$$\delta_{br} = \delta_{al}$$
$$= 0.0002857(L)$$
$$\frac{F_{br}(L)}{\frac{\pi}{4}(0.02)^2(100)(10^4)} = 0.0002857\, L$$
$$F_{br} = 8.976 \text{ kN}$$
$$\sigma_{br} = \frac{8.976(10^3)}{\frac{\pi}{4}(0.02^3)} = 28.6 \text{ MPa} < \sigma_\gamma \qquad \textbf{OK.}$$

From Eq. (1),

$$8.976 + 2(88.36) - 2P = 0$$
$$P = 92.8 \text{ kN} \qquad \textbf{Ans.}$$

(b) All the posts yield:

$$F_{br} = (\sigma_\gamma)_{br} A$$
$$= (590)(10^4)(\tfrac{\pi}{4})(0.02^2)$$
$$= 185.35 \text{ kN}$$
$$F_{al} = 88.36 \text{ kN}$$

From Eq. (1); $185.35 + 2(88.36) - 2P = 0$

$$P = 181 \text{ kN} \qquad \textbf{Ans.}$$

4–109. The rigid beam is supported by the three posts A, B, and C. Posts A and C have a diameter of 60 mm and are made of a material for which $E = 70$ GPa and $\sigma_Y = 20$ MPa. Post B is made of a material for which $E' = 100$ GPa and $\sigma_Y{}' = 590$ MPa. If $P = 130$ kN, determine the diameter of post B so that all three posts are about to yield. (Do not assume that the three posts have equal uncompressed lengths.)

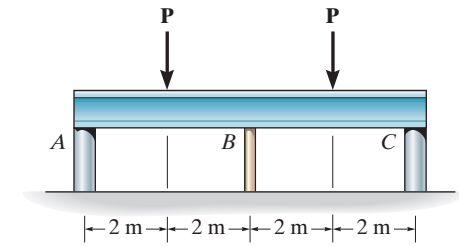

$$+\uparrow \Sigma F_y = 0; \qquad 2(F_\gamma)_{al} + F_{br} - 260 = 0 \qquad (1)$$

$$(F_{al})_\gamma = (\sigma_\gamma)_{al} A$$

$$= 20(10^6)(\tfrac{\pi}{4})(0.06)^2 = 56.55 \text{ kN}$$

From Eq. (1),

$$2(56.55) + F_{br} - 260 = 0$$

$$F_{br} = 146.9 \text{ kN}$$

$$(\sigma_\gamma)_{br} = 590(10^6) = \frac{146.9(10^3)}{\frac{\pi}{4}(d_B)^3}$$

$$d_B = 0.01779 \text{ m} = 17.8 \text{ mm} \qquad \textbf{Ans.}$$

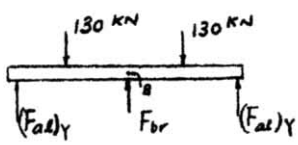

Ans:
$d_B = 17.8$ mm

4–110. The wire BC has a diameter of 0.125 in. and the material has the stress–strain characteristics shown in the figure. Determine the vertical displacement of the handle at D if the pull at the grip is slowly increased and reaches a magnitude of (a) $P = 450$ lb, (b) $P = 600$ lb. Assume the bar is rigid.

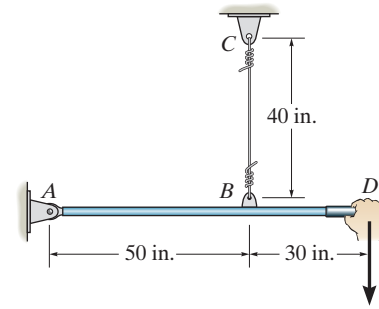

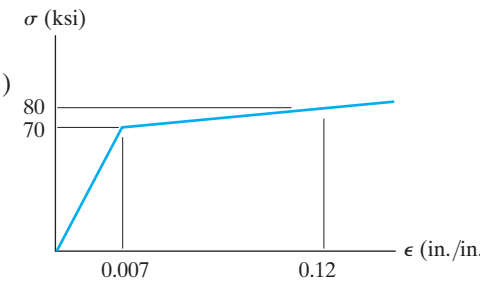

Equations of Equilibrium:

$\circlearrowleft + \Sigma M_A = 0; \qquad F_{BC}(50) - P(80) = 0 \qquad (1)$

(a) From Eq. (1) when $P = 450$ lb, $\qquad F_{BC} = 720$ lb

Average Normal Stress and Strain:

$$\sigma_{BC} = \frac{F_{BC}}{A_{BC}} = \frac{720}{\frac{\pi}{4}(0.125^2)} = 58.67 \text{ ksi}$$

From the Stress–Strain diagram

$$\frac{58.67}{\epsilon_{BC}} = \frac{70}{0.007}; \qquad \epsilon_{BC} = 0.005867 \text{ in./in.}$$

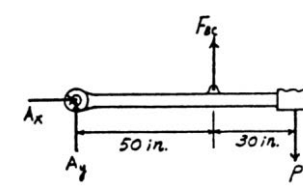

Displacement:

$$\delta_{BC} = \epsilon_{BC} L_{BC} = 0.005867(40) = 0.2347 \text{ in.}$$

$$\frac{\delta_D}{80} = \frac{\delta_{BC}}{50}; \qquad \delta_D = \frac{8}{5}(0.2347) = 0.375 \text{ in.} \qquad \textbf{Ans.}$$

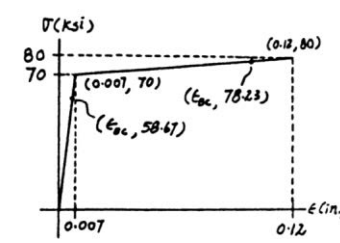

(b) From Eq. (1) when $P = 600$ lb, $\qquad F_{BC} = 960$ lb

Average Normal Stress and Strain:

$$\sigma_{BC} = \frac{F_{BC}}{A_{BC}} = \frac{960}{\frac{\pi}{4}(0.125)^2} = 78.23 \text{ ksi}$$

From Stress–Strain diagram

$$\frac{78.23 - 70}{\epsilon_{BC} - 0.007} = \frac{80 - 70}{0.12 - 0.007} \qquad \epsilon_{BC} = 0.09997 \text{ in./in.}$$

Displacement:

$$\delta_{BC} = \epsilon_{BC} L_{BC} = 0.09997(40) = 3.9990 \text{ in.}$$

$$\frac{\delta_D}{80} = \frac{\delta_{BC}}{50}; \qquad \delta_D = \frac{8}{5}(3.9990) = 6.40 \text{ in.} \qquad \textbf{Ans.}$$

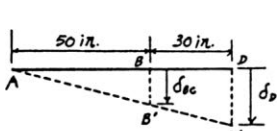

Ans:
(a) $\delta_D = 0.375$ in., (b) $\delta_D = 6.40$ in.

4–111. The bar having a diameter of 2 in. is fixed connected at its ends and supports the axial load **P**. If the material is elastic perfectly plastic as shown by the stress–strain diagram, determine the smallest load P needed to cause segment CB to yield. If this load is released, determine the permanent displacement of point C.

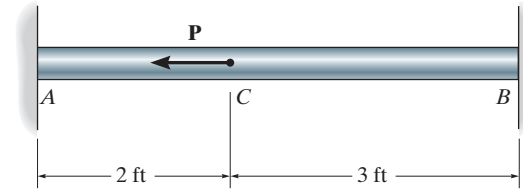

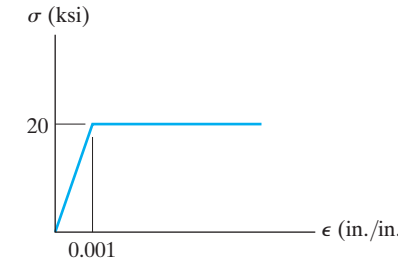

When P is increased, region AC will become plastic first, then CB will become plastic. Thus,

$$F_A = F_B = \sigma A = 20(\pi)(1)^2 = 62.832 \text{ kip}$$

$$\overset{+}{\rightarrow} \Sigma F_x = 0; \qquad F_A + F_B - P = 0 \qquad (1)$$

$$P = 2(62.832) = 125.66 \text{ kip}$$

$$P = 126 \text{ kip} \qquad \textbf{Ans.}$$

The deflection of point C is,

$$\delta_C = \epsilon L = (0.001)(3)(12) = 0.036 \text{ in.} \leftarrow$$

Consider the reverse of P on the bar.

$$\frac{F_A'(2)}{AE} = \frac{F_B'(3)}{AE}$$

$$F_A' = 1.5\, F_B'$$

So that from Eq. (1)

$$F_B' = 0.4P$$

$$F_A' = 0.6P$$

$$\delta_C' = \frac{F_B' L}{AE} = \frac{0.4(P)(3)(12)}{AE} = \frac{0.4(125.66)(3)(12)}{\pi(1)^2(20/0.001)} = 0.02880 \text{ in.} \rightarrow$$

$$\Delta\delta = 0.036 - 0.0288 = 0.00720 \text{ in.} \leftarrow \qquad \textbf{Ans.}$$

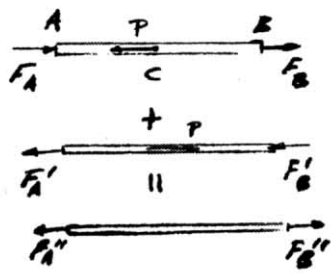

Ans:
$P = 126$ kip, $\Delta\delta = 0.00720$ in.

***4–112.** Determine the elongation of the bar in Prob. 4–111 when both the load **P** and the supports are removed.

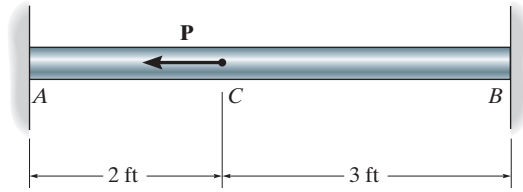

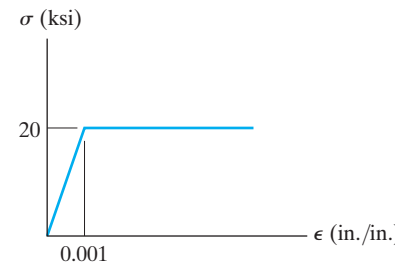

When P is increased, region AC will become plastic first, then CB will become plastic. Thus,

$$F_A = F_B = \sigma A = 20(\pi)(1)^2 = 62.832 \text{ kip}$$

$$\overset{+}{\rightarrow} \Sigma F_x = 0; \qquad F_A + F_B - P = 0 \qquad (1)$$

$$P = 2(62.832) = 125.66 \text{ kip}$$

$$P = 126 \text{ kip} \qquad \textbf{Ans.}$$

The deflection of point C is,

$$\delta_C = \varepsilon L = (0.001)(3)(12) = 0.036 \text{ in.} \leftarrow$$

Consider the reverse of P on the bar.

$$\frac{F_A'(2)}{AE} = \frac{F_B'(3)}{AE}$$

$$F_A' = 1.5\, F_B'$$

So that from Eq. (1)

$$F_B' = 0.4P$$

$$F_A' = 0.6P$$

The resultant reactions are

$$F_A'' = F_B'' = -62.832 + 0.4(125.66) = 62.832 - 0.4(125.66) = 12.566 \text{ kip}$$

When the supports are removed the elongation will be,

$$\delta = \frac{PL}{AE} = \frac{12.566(5)(12)}{\pi(1)^2(20/0.001)} = 0.0120 \text{ in.} \qquad \textbf{Ans.}$$

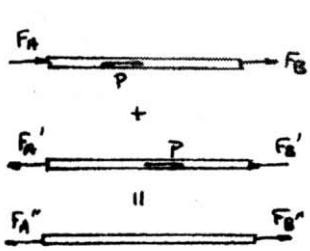

4–113. The three bars are pinned together and subjected to the load **P**. If each bar has a cross-sectional area A, length L, and is made from an elastic perfectly plastic material, for which the yield stress is σ_Y, determine the largest load (ultimate load) that can be supported by the bars, i.e., the load P that causes all the bars to yield. Also, what is the horizontal displacement of point A when the load reaches its ultimate value? The modulus of elasticity is E.

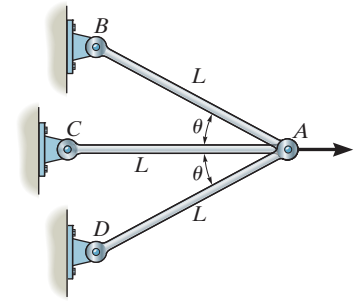

When all bars yield, the force in each bar is, $F\gamma = \sigma\gamma A$

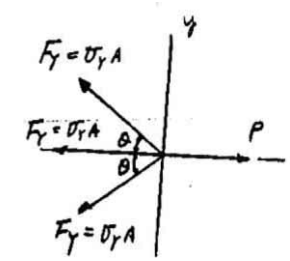

$\xrightarrow{+} \Sigma F_x = 0\,; \qquad P - 2\sigma\gamma A \cos\theta - \sigma\gamma A = 0$

$P = \sigma_y A(2\cos\theta + 1)$ **Ans.**

Bar AC will yield first followed by bars AB and AD.

$$\delta_{AB} = \delta_{AD} = \frac{F\gamma(L)}{AE} = \frac{\sigma\gamma AL}{AE} = \frac{\sigma\gamma L}{E}$$

$$\delta_A = \frac{\delta_{AB}}{\cos\theta} = \frac{\sigma\gamma L}{E\cos\theta}$$ **Ans.**

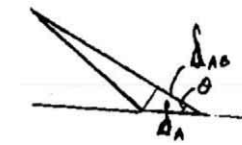

Ans:
$P = \sigma_Y A(2\cos\theta + 1)$, $\delta_A = \dfrac{\sigma_\gamma L}{E\cos\theta}$

4–114. The assembly consists of two A992 steel bolts AB and EF and an 6061-T6 aluminum rod CD. When the temperature is at 30° C, the gap between the rod and rigid member AE is 0.1 mm. Determine the normal stress developed in the bolts and the rod if the temperature rises to 130° C. Assume BF is also rigid.

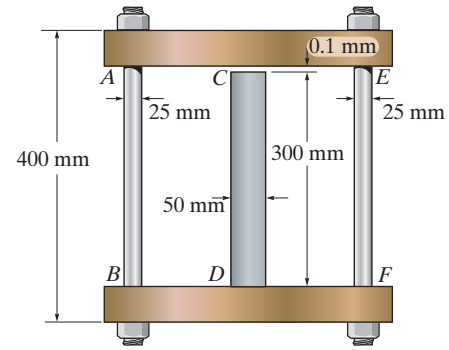

Equation of Equilibrium: Referring to the free-body diagram of the rigid cap shown in Fig. *a*,

$$+\uparrow \Sigma F_y = 0; \qquad F_r - 2F_b = 0 \tag{1}$$

Compatibility Equation: If the bolts and the rod are unconstrained, they will have a free expansion of $(\delta_T)_b = \alpha_{st}\Delta T L_b = 12(10^{-6})(130 - 30)(400) = 0.48$ mm and $(\delta\gamma)_r = \alpha_{al}\Delta T L_r = 24(10^{-6})(130 - 30)(300) = 0.72$ mm. Referring to the initial and final position of the assembly shown in Fig. *b*,

$$(\delta_T)_r - \delta_{Fr} - 0.1 = (\delta_T)_b + \delta_{Fb}$$

$$0.72 - \frac{F_r(300)}{\frac{\pi}{4}(0.05^2)(68.9)(10^9)} - 0.1 = 0.48 + \frac{F_b(400)}{\frac{\pi}{4}(0.025^2)(200)(10^9)}$$

$$F_b + 0.5443F_r = 34361.17 \tag{2}$$

Solving Eqs. (1) and (2).

$$F_b + 16\,452.29 \text{ N} \qquad F_r = 32\,904.58 \text{ N}$$

Normal Stress:

$$\sigma_b = \frac{F_b}{A_b} = \frac{16\,452.29}{\frac{\pi}{4}(0.025^2)} = 33.5 \text{ MPa} \qquad \textbf{Ans.}$$

$$\sigma_r = \frac{F_r}{A_r} = \frac{32\,904.58}{\frac{\pi}{4}(0.05^2)} = 16.8 \text{ MPa} \qquad \textbf{Ans.}$$

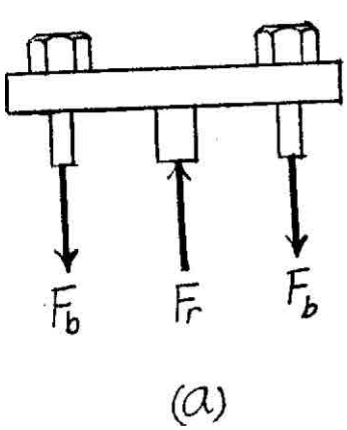

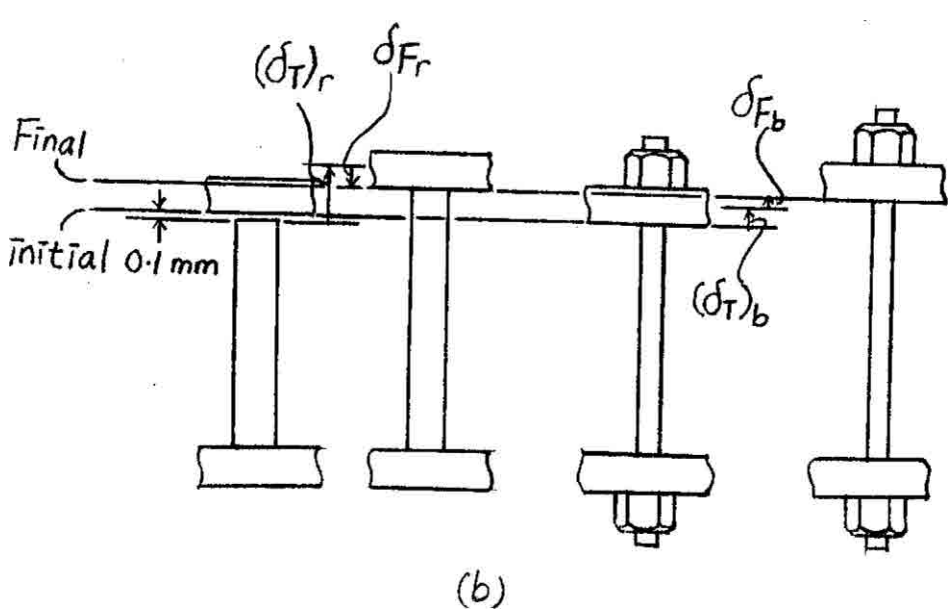

Ans:
$\sigma_b = 33.5$ MPa, $\sigma_r = 16.8$ MPa

4–115. The assembly shown consists of two A992 steel bolts AB and EF and an 6061-T6 aluminum rod CD. When the temperature is at 30° C, the gap between the rod and rigid member AE is 0.1 mm. Determine the highest temperature to which the assembly can be raised without causing yielding either in the rod or the bolts. Assume BF is also rigid.

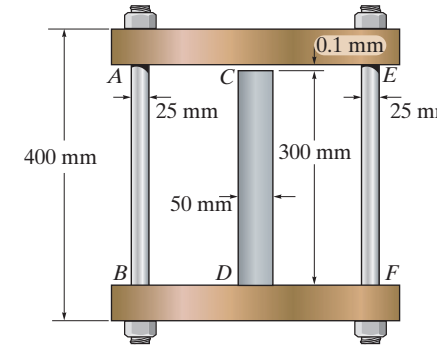

Equation of Equilibrium: Referring to the free-body diagram of the rigid cap shown in Fig. a,

$$+\uparrow \Sigma F_y = 0; \quad F_p - 2F_b = 0 \tag{1}$$

Normal Stress: Assuming that the steel bolts yield first, then

$$F_b = (\sigma\gamma)_{st} A_b = 250(10^6)\left[\frac{\pi}{4}(0.025^2)\right] = 122\,718.46 \text{ N}$$

Substituting this result into Eq. (1),

$$F_p = 245\,436.93 \text{ N}$$

Then,

$$\sigma_p = \frac{F_p}{A_p} = \frac{245\,436.93}{\frac{\pi}{4}(0.05^2)} = 125 \text{ MPa} < (\sigma\gamma)_{al} \qquad \textbf{(O.K!)}$$

Compatibility Equation: If the assembly is unconstrained, the bolts and the post will have free expansion of $(\delta_T)_b = \alpha_{st}\Delta T L_b = 12(10^{-6})(T - 30)(400) = 4.8(10^{-3})(T - 30)$ and $(\delta_T)_p = \alpha_{al}\Delta T L_p = 24(10^{-6})T - 30)(300) = 7.2(10^{-3})(T - 30)$. Referring to the initial and final position of the assembly shown in Fig. b,

$$(\delta_T)_p - \delta_{Fp} - 0.1 = (\delta_T)_b + \delta_{Fb}$$

$$7.2(10^{-3})(T - 30) - \frac{245\,436.93(300)}{\frac{\pi}{4}(0\ .05^2)(68.9)(10^9)} - 0.1 = 4.8(10^{-3})(T - 30) + \frac{122\,718.46(400)}{\frac{\pi}{4}(0.025^2)(200)(10^9)}$$

$$T = 506.78° \text{ C} = 507° \text{ C} \qquad \textbf{Ans.}$$

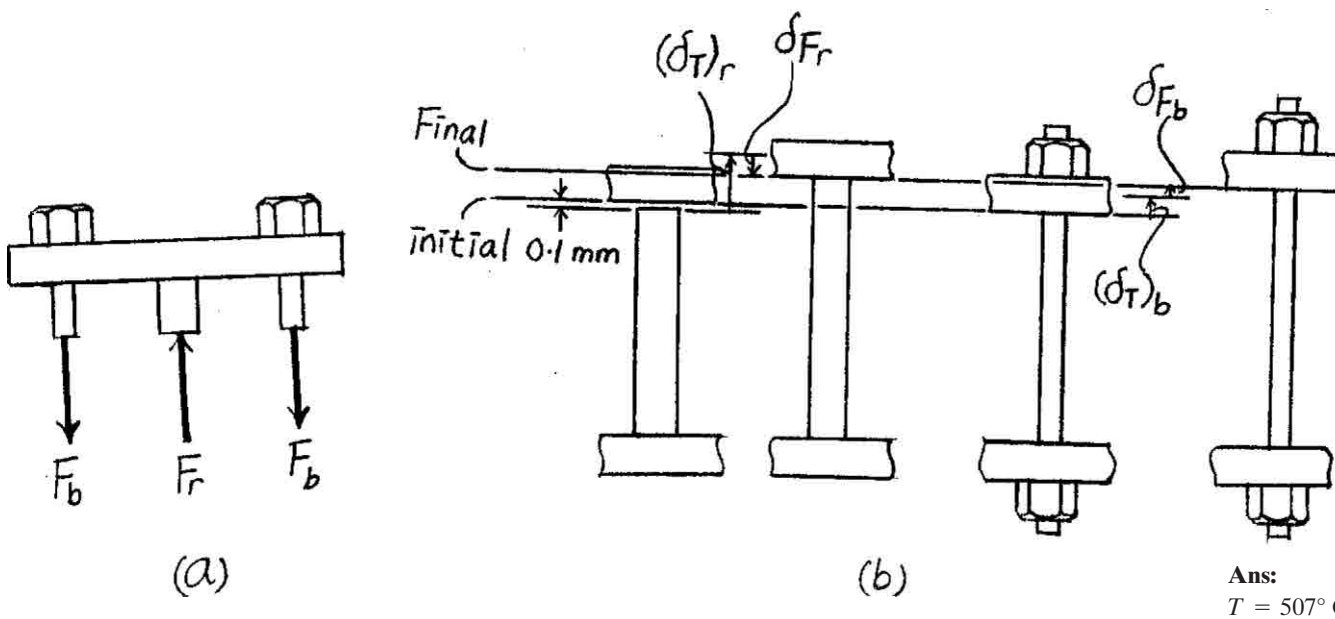

Ans:
$T = 507°$ C

***4–116.** The rods each have the same 25-mm diameter and 600-mm length. If they are made of A992 steel, determine the forces developed in each rod when the temperature increases to 50° C.

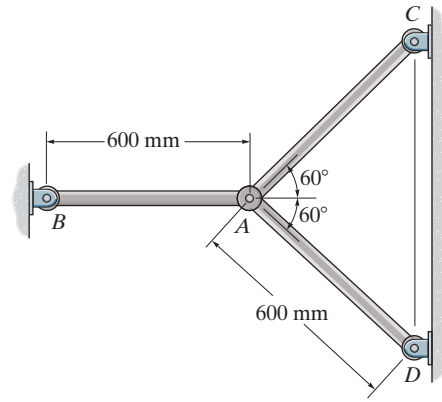

Equation of Equilibrium: Referring to the free-body diagram of joint A shown in Fig. a,

$$+\uparrow \Sigma F_x = 0; \qquad F_{AD}\sin 60° - F_{AC}\sin 60° = 0 \qquad F_{AC} = F_{AD} = F$$

$$\xrightarrow{+} \Sigma F_x = 0; \qquad F_{AB} - 2F\cos 60° = 0$$

$$F_{AB} = F \tag{1}$$

Compatibility Equation: If AB and AC are unconstrained, they will have a free expansion of $(\delta_T)_{AB} = (\delta_T)_{AC} = \alpha_{st}\Delta T L = 12(10^{-6})(50)(600) = 0.36$ mm. Referring to the initial and final position of joint A,

$$\delta_{F_{AB}} - (\delta_T)_{AB} = \left(\delta_T{}'\right)_{AC} - \delta_{F_{AC}}{}'$$

Due to symmetry, joint A **will** displace horizontally, and $\delta_{AC}{}' = \dfrac{\delta_{AC}}{\cos 60°} = 2\delta_{AC}$. Thus, $\left(\delta_T{}'\right)_{AC} = 2(\delta_T)_{AC}$ and $\delta_{F_{AC}}{}' = 2\delta_{F_{AC}}$. Thus, this equation becomes

$$\delta_{F_{AB}} - (\delta_T)_{AB} = 2(\delta_T)_{AC} - 2\delta_{AC}$$

$$\frac{F_{AB}(600)}{\frac{\pi}{4}(0.025^2)(200)(10^9)} - 0.36 = 2(0.36) - 2\left[\frac{F(600)}{\frac{\pi}{4}(0.025^2)(200)(10^9)}\right]$$

$$F_{AB} + 2F = 176\,714.59 \tag{2}$$

Solving Eqs. (1) and (2),

$$F_{AB} = F_{AC} = F_{AD} = 58\,904.86\,\text{N} = 58.9\,\text{kN} \qquad \textbf{Ans.}$$

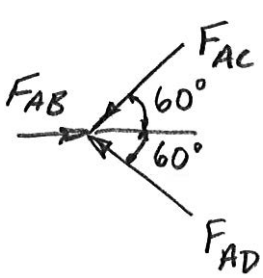

(a)

4–117. Two A992 steel pipes, each having a cross- sectional area of 0.32 in^2, are screwed together using a union at B as shown. Originally the assembly is adjusted so that no load is on the pipe. If the union is then tightened so that its screw, having a lead of 0.15 in., undergoes two full turns, determine the average normal stress developed in the pipe. Assume that the union at B and couplings at A and C are rigid. Neglect the size of the union. *Note:* The lead would cause the pipe, when *unloaded*, to shorten 0.15 in. when the union is rotated one revolution.

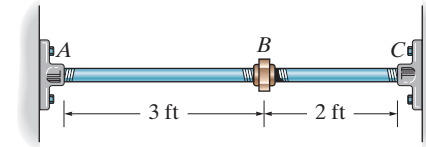

The loads acting on both segments AB and BC are the same since no external load acts on the system.

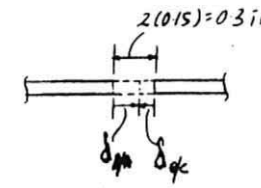

$$0.3 = \delta_{B/A} + \delta_{B/C}$$

$$0.3 = \frac{P(3)(12)}{0.32(29)(10^3)} + \frac{P(2)(12)}{0.32(29)(10^3)}$$

$$P = 46.4 \text{ kip}$$

$$\sigma_{AB} = \sigma_{BC} = \frac{P}{A} = \frac{46.4}{0.32} = 145 \text{ ksi}$$ **Ans.**

Ans:
$\sigma_{AB} = \sigma_{BC} = 145$ ksi

4–118. The force **P** is applied to the bar, which is composed of an elastic perfectly plastic material. Construct a graph to show how the force in each section AB and BC (ordinate) varies as P (abscissa) is increased. The bar has cross-sectional areas of 1 in^2 in region AB and 4 in^2 in region BC, and $\sigma_Y = 30$ ksi.

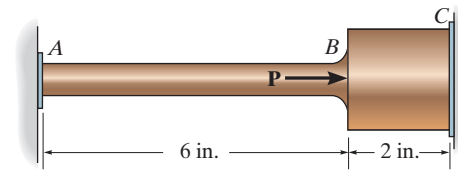

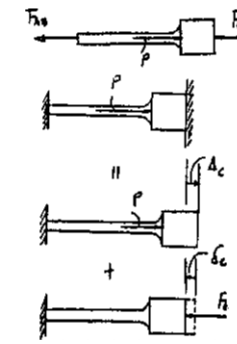

$$\overset{+}{\rightarrow} \Sigma F_x = 0; \quad P - F_{AB} - F_{BC} = 0 \qquad (1)$$

Elastic behavior: $\overset{+}{\rightarrow} 0 = \Delta_C - \delta_C$;

$$0 = \frac{P(6)}{(1)E} - \left[\frac{F_{BC}(2)}{(4)E} + \frac{F_{BC}(6)}{(1)E}\right]$$

$$F_{BC} = 0.9231\,P \qquad (2)$$

Substituting Eq. (2) into (1):

$$F_{AB} = 0.07692\,P \qquad (3)$$

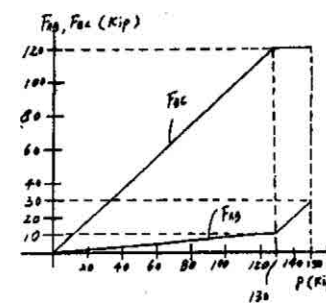

By comparison, segment BC will yield first. Hence,

$$(F_{BC})\gamma = \sigma\gamma A = 30(4) = 120 \text{ kip}$$

From Eq. (1) and (3) using $F_{BC} = (F_{BC})\gamma = 120$ kip

$$P = 130 \text{ kip}; \quad F_{AB} = 10 \text{ kip}$$

When segment AB yields,

$$(F_{AB})\gamma = \sigma\gamma A = 30(1) = 30 \text{ kip}; \quad (F_{BC})_\gamma = 120 \text{ kip}$$

From Eq. (1),

$$P = 150 \text{ kip}$$

4–119. The 2014-T6 aluminum rod has a diameter of 0.5 in. and is lightly attached to the rigid supports at A and B when $T_1 = 70°\text{F}$. If the temperature becomes $T_2 = -10°\text{F}$, and an axial force of $P = 16$ lb is applied to the rigid collar as shown, determine the reactions at A and B.

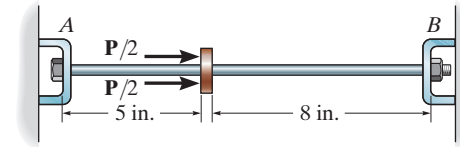

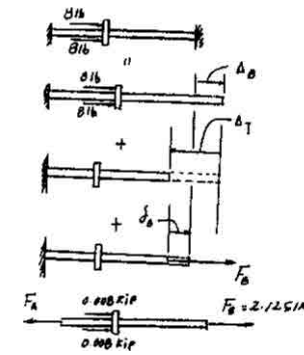

$$\overset{+}{\rightarrow} 0 = \Delta_B - \Delta_T + \delta_B$$

$$0 = \frac{0.016(5)}{\frac{\pi}{4}(0.5^2)(10.6)(10^3)} - 12.8(10^{-6})[70° - (-10°)](13) + \frac{F_B(13)}{\frac{\pi}{4}(0.5^2)(10.6)(10^3)}$$

$F_B = 2.1251 \text{ kip} = 2.13 \text{ kip}$ **Ans.**

$$\overset{+}{\rightarrow} \Sigma F_x = 0; \quad 2(0.008) + 2.1251 - F_A = 0$$

$F_A = 2.14 \text{ kip}$ **Ans.**

Ans:
$F_B = 2.13$ kip, $F_A = 2.14$ kip

***4–120.** The 2014-T6 aluminum rod has a diameter of 0.5 in. and is lightly attached to the rigid supports at A and B when $T_1 = 70°\text{F}$. Determine the force P that must be applied to the collar so that, when $T = 0°\text{F}$, the reaction at B is zero.

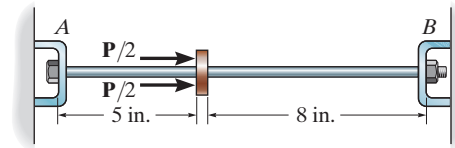

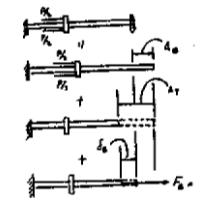

$$\overset{+}{\rightarrow} = \Delta_B - \Delta_T + \delta_B$$

$$0 = \frac{P(5)}{\frac{\pi}{4}(0.5^2)(10.6)(10^3)} - 12.8(10^{-6})[(70)(13)] + 0$$

$P = 4.85$ kip **Ans.**

4–121. The rigid link is supported by a pin at A and two A-36 steel wires, each having an unstretched length of 12 in. and cross-sectional area of 0.0125 in^2. Determine the force developed in the wires when the link supports the vertical load of 350 lb.

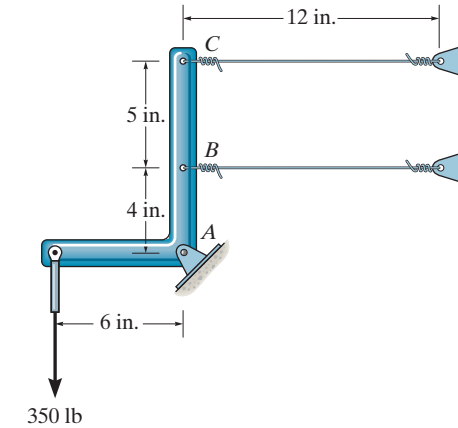

Equations of Equilibrium:

$$\circlearrowleft + \Sigma M_A = 0; \qquad -F_C(9) - F_B(4) + 350(6) = 0 \qquad (1)$$

Compatibility:

$$\frac{\delta_B}{4} = \frac{\delta_C}{9}$$

$$\frac{F_B(L)}{4AE} = \frac{F_C(L)}{9AE}$$

$$9F_B - 4F_C = 0, \qquad (2)$$

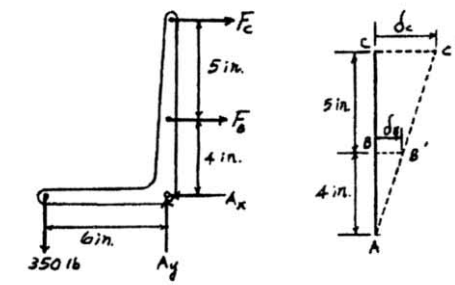

Solving Eqs. (1) and (2) yields:

$$F_B = 86.6 \text{ lb} \qquad \textbf{Ans.}$$

$$F_C = 195 \text{ lb} \qquad \textbf{Ans.}$$

Ans:
$F_B = 86.6$ lb, $F_C = 195$ lb

4–122. The joint is made from three A992 steel plates that are bonded together at their seams. Determine the displacement of end A with respect to end B when the joint is subjected to the axial loads shown. Each plate has a thickness of 5 mm.

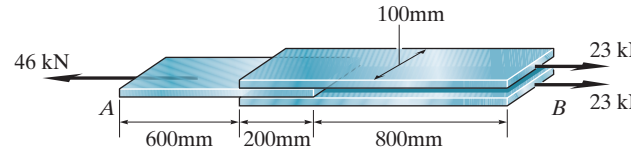

$$\delta_{A/B} = \Sigma \frac{PL}{AE} = \frac{46(10^3)(600)}{(0.005)(0.1)(200)(10^9)} + \frac{46(10^3)(200)}{3(0.005)(0.1)(200)(10^9)} + \frac{23(10^3)(800)}{(0.005)(0.1)(200)(10^9)}$$

$$= 0.491 \text{ mm}$$ **Ans.**

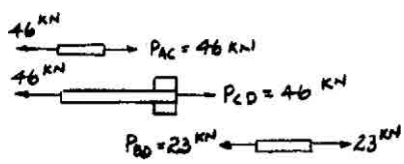

Ans:
$\delta_{A/B} = 0.491$ mm

5–1. The solid shaft of radius r is subjected to a torque **T**. Determine the radius r' of the inner core of the shaft that resists one-half of the applied torque $(T/2)$. Solve the problem two ways: (a) by using the torsion formula, (b) by finding the resultant of the shear-stress distribution.

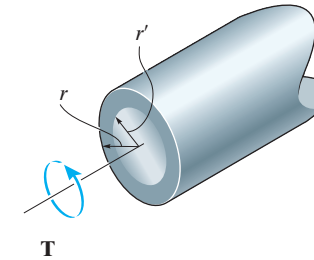

a) $\tau_{\max} = \dfrac{Tc}{J} = \dfrac{Tr}{\frac{\pi}{2}r^4} = \dfrac{2T}{\pi r^3}$

$$\tau = \frac{\left(\frac{T}{2}\right)r'}{\frac{\pi}{2}(r')^4} = \frac{T}{\pi(r')^3}$$

Since $\tau = \dfrac{r'}{r}\tau_{\max}$; $\quad \dfrac{T}{\pi(r')^3} = \dfrac{r'}{r}\left(\dfrac{2T}{\pi r^3}\right)$

$$r' = \frac{r}{2^{\frac{1}{4}}} = 0.841r \qquad \textbf{Ans.}$$

b) $\displaystyle\int_0^{\frac{T}{2}} dT = 2\pi\int_0^{r'} \tau\rho^2\, d\rho$

$$\int_0^{\frac{T}{2}} dT = 2\pi\int_0^{r'} \frac{\rho}{r}\tau_{\max}\rho^2\, d\rho$$

$$\int_0^{\frac{T}{2}} dT = 2\pi\int_0^{r'} \frac{\rho}{r}\left(\frac{2T}{\pi r^3}\right)\rho^2\, d\rho$$

$$\frac{T}{2} = \frac{4T}{r^4}\int_0^{r'} \rho^3\, d\rho$$

$$r' = \frac{r'}{2^{\frac{1}{4}}} = 0.841r \qquad \textbf{Ans.}$$

Ans:
$r' = 0.841r$

5–2. The solid shaft of radius r is subjected to a torque **T**. Determine the radius r' of the inner core of the shaft that resists one-quarter of the applied torque $(T/4)$. Solve the problem two ways: (a) by using the torsion formula, (b) by finding the resultant of the shear-stress distribution.

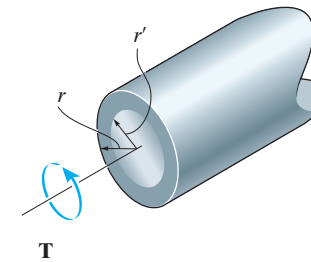

a) $\tau_{\max} = \dfrac{Tc}{J} = \dfrac{T(r)}{\frac{\pi}{2}(r^4)} = \dfrac{2T}{\pi r^3}$

Since $\tau = \dfrac{r'}{r}\tau_{\max} = \dfrac{2Tr'}{\pi r^4}$

$\tau' = \dfrac{T'c'}{J'}; \qquad \dfrac{2Tr'}{\pi r^4} = \dfrac{(\frac{T}{4})r'}{\frac{\pi}{2}(r')^4}$

$r' = \dfrac{r}{4^{\frac{1}{4}}} = 0.707\,r$ **Ans.**

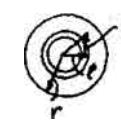

b) $\tau = \dfrac{\rho}{c}\tau_{\max} = \dfrac{\rho}{r}\left(\dfrac{2T}{\pi r^3}\right) = \dfrac{2T}{\pi r^4}\rho; \qquad dA = 2\pi\rho\, d\rho$

$dT = \rho\tau\, dA = \rho\left[\dfrac{2T}{\pi r^4}\rho\right](2\pi\rho\, d\rho) = \dfrac{4T}{r^4}\rho^3 d\rho$

$\displaystyle\int_0^{\frac{T}{4}} dT = \frac{4T}{r^4}\int^{r'} \rho^3 d\rho$

$\dfrac{T}{4} = \dfrac{4T}{r^4}\dfrac{\rho^4}{4}\Big|_0^{r'}; \qquad \dfrac{1}{4} = \dfrac{(r')^4}{r^4}$

$r' = 0.707\,r$ **Ans.**

Ans:
$r' = 0.707\,r$

5–3. The solid shaft is fixed to the support at C and subjected to the torsional loadings shown. Determine the shear stress at points A and B and sketch the shear stress on volume elements located at these points.

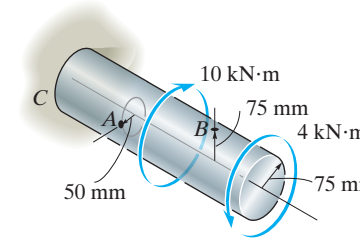

The internal torques developed at cross-sections passing through point B and A are shown in Fig. a and b, respectively.

The polar moment of inertia of the shaft is $J = \frac{\pi}{2}(0.075^4) = 49.70(10^{-6})\ \text{m}^4$. For point B, $\rho_B = C = 0.075$. Thus,

$$\tau_B = \frac{T_B c}{J} = \frac{4(10^3)(0.075)}{49.70(10^{-6})} = 6.036(10^6)\ \text{Pa} = 6.04\ \text{MPa} \qquad \textbf{Ans.}$$

From point A, $\rho_A = 0.05$ m.

$$\tau_A = \frac{T_A \rho_A}{J} = \frac{6(10^3)(0.05)}{49.70\ (10^{-6})} = 6.036(10^6)\ \text{Pa} = 6.04\ \text{MPa}. \qquad \textbf{Ans.}$$

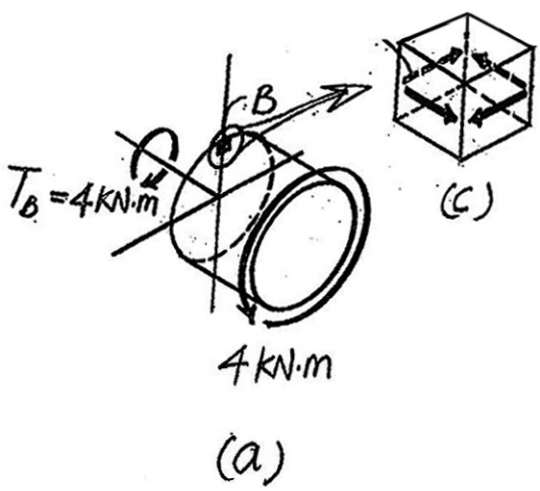

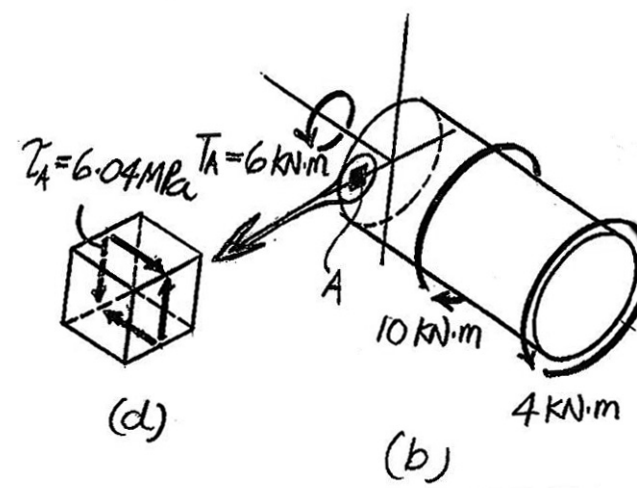

Ans:
$\tau_B = 6.04$ MPa, $\tau_A = 6.04$ MPa

***5–4.** The copper pipe has an outer diameter of 40 mm and an inner diameter of 37 mm. If it is tightly secured to the wall at A and three torques are applied to it as shown, determine the absolute maximum shear stress developed in the pipe.

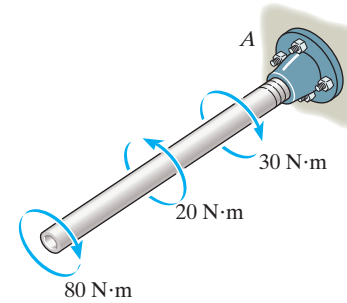

$$\tau_{max} = \frac{T_{max}\,c}{J} = \frac{90(0.02)}{\frac{\pi}{2}(0.02^4 - 0.0185^4)}$$

$$= 26.7 \text{ MPa}$$ **Ans.**

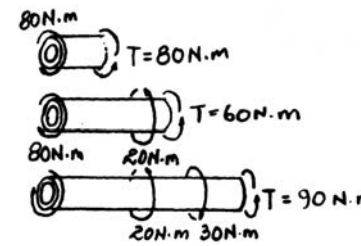

5–5. The copper pipe has an outer diameter of 2.50 in. and an inner diameter of 2.30 in. If it is tightly secured to the wall at C and three torques are applied to it as shown, determine the shear stress developed at points A and B. These points lie on the pipe's outer surface. Sketch the shear stress on volume elements located at A and B.

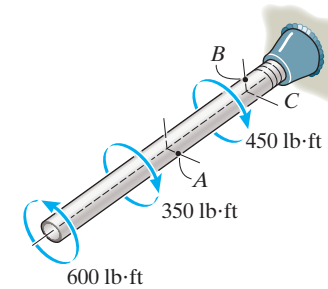

$$\tau_A = \frac{Tc}{J} = \frac{250(12)(1.25)}{\frac{\pi}{2}(1.25^4 - 1.15^4)} = 3.45 \text{ ksi}$$ **Ans.**

$$\tau_B = \frac{Tc}{J} = \frac{200(12)(1.25)}{\frac{\pi}{2}(1.25^4 - 1.15^4)} = 2.76 \text{ ksi}$$ **Ans.**

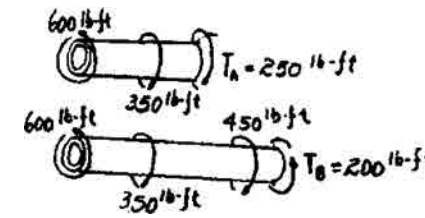

Ans:
$\tau_A = 3.45$ ksi, $\tau_B = 2.16$ ksi

5–6. The solid shaft has a diameter of 0.75 in. If it is subjected to the torques shown, determine the maximum shear stress developed in regions BC and DE of the shaft. The bearings at A and F allow free rotation of the shaft.

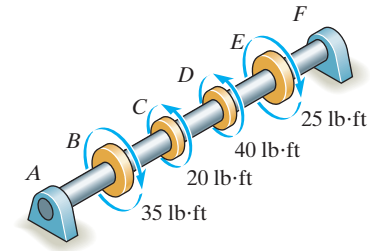

$$(\tau_{BC})_{\max} = \frac{T_{BC}\,c}{J} = \frac{35(12)(0.375)}{\frac{\pi}{2}(0.375)^4} = 5070 \text{ psi} = 5.07 \text{ ksi}$$ **Ans.**

$$(\tau_{DE})_{\max} = \frac{T_{DE}\,c}{J} = \frac{25(12)(0.375)}{\frac{\pi}{2}(0.375)^4} = 3621 \text{ psi} = 3.62 \text{ ksi}$$ **Ans.**

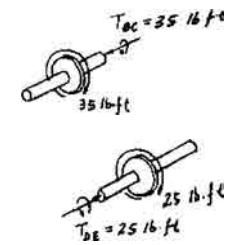

Ans:
$(\tau_{BC})_{\max} = 5.07$ ksi, $(\tau_{DE})_{\max} = 3.62$ ksi

5–7. The solid shaft has a diameter of 0.75 in. If it is subjected to the torques shown, determine the maximum shear stress developed in regions CD and EF of the shaft. The bearings at A and F allow free rotation of the shaft.

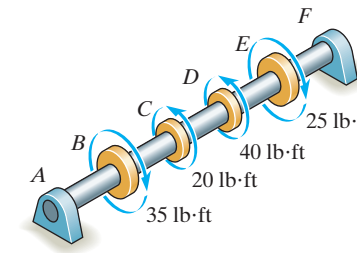

$$(\tau_{EF})_{\max} = \frac{T_{EF}\,c}{J} = 0 \qquad \textbf{Ans.}$$

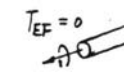

$$(\tau_{CD})_{\max} = \frac{T_{CD}\,c}{J} = \frac{15(12)(0.375)}{\frac{\pi}{2}(0.375)^4}$$

$$= 2173 \text{ psi} = 2.17 \text{ ksi} \qquad \textbf{Ans.}$$

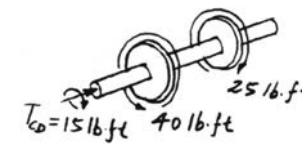

Ans:
$(\tau_{EF})_{\max} = 0$, $(\tau_{CD})_{\max} = 2.17$ ksi

***5–8.** The solid 30-mm-diameter shaft is used to transmit the torques applied to the gears. Determine the absolute maximum shear stress on the shaft.

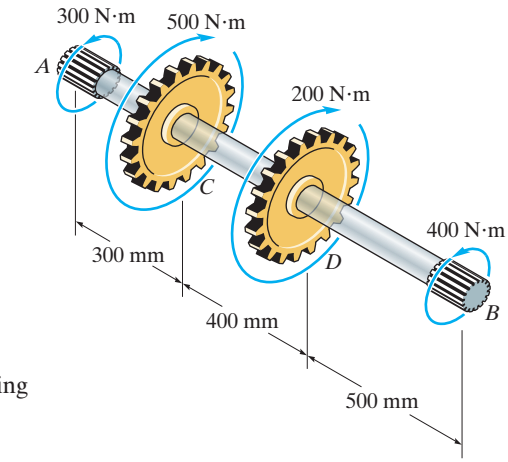

Internal Torque: As shown on torque diagram.

Maximum Shear Stress: From the torque diagram $T_{max} = 400\ \text{N}\cdot\text{m}$. Then, applying torsion Formula.

$$\tau_{\substack{abs\\max}} = \frac{T_{max}\,c}{J}$$

$$= \frac{400(0.015)}{\frac{\pi}{2}(0.015^4)} = 75.5\ \text{MPa} \qquad \textbf{Ans.}$$

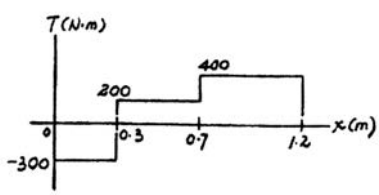

5–9. The solid shaft is fixed to the support at C and subjected to the torsional loadings shown. Determine the shear stress at points A and B on the surface, and sketch the shear stress on volume elements located at these points.

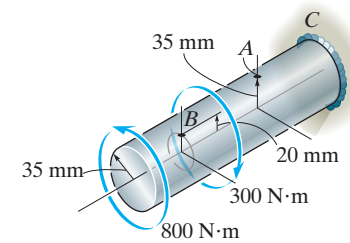

$$\tau_B = \frac{T_B\,\rho}{J} = \frac{800(0.02)}{\frac{\pi}{2}(0.035^4)} = 6.79 \text{ MPa}$$ **Ans.**

$$\tau_A = \frac{T_A\,c}{J} = \frac{500(0.035)}{\frac{\pi}{2}(0.035^4)} = 7.42 \text{ MPa}$$ **Ans.**

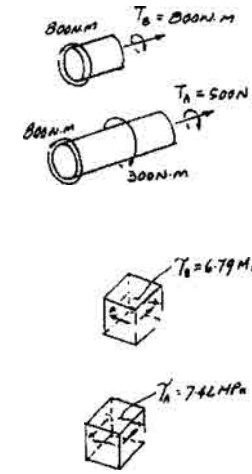

Ans:
$\tau_B = 6.79$ MPa, $\tau_A = 7.42$ MPa

5–10. The coupling is used to connect the two shafts together. Assuming that the shear stress in the bolts is *uniform*, determine the number of bolts necessary to make the maximum shear stress in the shaft equal to the shear stress in the bolts. Each bolt has a diameter d.

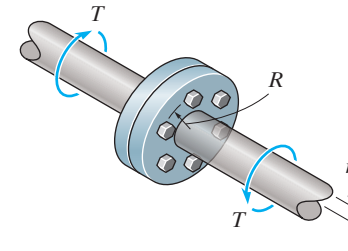

n is the number of bolts and F is the shear force in each bolt.

$$T - nFR = 0; \qquad F = \frac{T}{nR}$$

$$\tau_{avg} = \frac{F}{A} = \frac{\frac{T}{nR}}{(\frac{\pi}{4})d^2} = \frac{4T}{nR\pi d^2}$$

Maximum shear stress for the shaft:

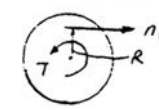

$$\tau_{max} = \frac{Tc}{J} = \frac{Tr}{\frac{\pi}{2}r^4} = \frac{2T}{\pi r^3}$$

$$\tau_{avg} = \tau_{max}; \qquad \frac{4T}{nR\pi d^2} = \frac{2T}{\pi r^3}$$

$$n = \frac{2r^3}{Rd^2}$$ **Ans.**

Ans:

$$n = \frac{2r^3}{Rd^2}$$

5–11. The assembly consists of two sections of galvanized steel pipe connected together using a reducing coupling at B. The smaller pipe has an outer diameter of 0.75 in. and an inner diameter of 0.68 in., whereas the larger pipe has an outer diameter of 1 in. and an inner diameter of 0.86 in. If the pipe is tightly secured to the wall at C, determine the maximum shear stress developed in each section of the pipe when the couple shown is applied to the handles of the wrench.

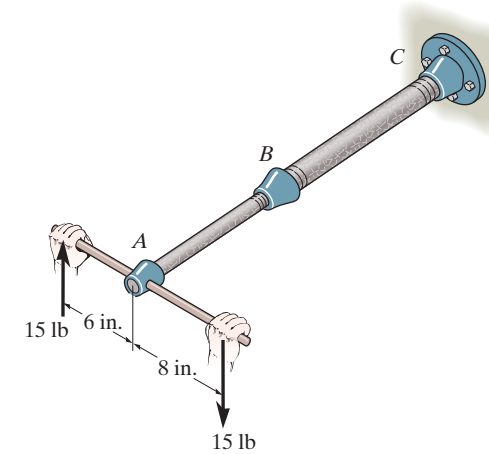

$$\tau_{AB} = \frac{Tc}{J} = \frac{210(0.375)}{\frac{\pi}{2}(0.375^4 - 0.34^4)} = 7.82 \text{ ksi}$$ **Ans.**

$$\tau_{BC} = \frac{Tc}{J} = \frac{210(0.5)}{\frac{\pi}{2}(0.5^4 - 0.43^4)} = 2.36 \text{ ksi}$$ **Ans.**

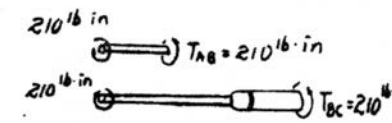

Ans:
$\tau_{AB} = 7.82$ ksi, $\tau_{BC} = 2.36$ ksi

***5–12.** The 150-mm-diameter shaft is supported by a smooth journal bearing at E and a smooth thrust bearing at F. Determine the maximum shear stress developed in each segment of the shaft.

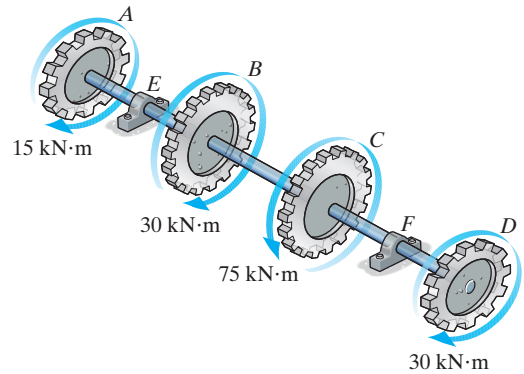

Internal Loadings: The internal torques developed in segments AB, BC, and CD of the assembly are shown in their respective free-body diagrams shown in Figs. a, b, and c.

Allowable Shear Stress: The polar moment of inertia of the shaft is $J = \frac{\pi}{2}(0.075^4) = 49.701(10^{-6})\text{m}^4$.

$$(\tau_{\max})_{AB} = \frac{T_{AB}\,c}{J} = \frac{15(10^3)(0.075)}{49.701(10^{-6})} = 22.6 \text{ MPa} \qquad \textbf{Ans.}$$

$$(\tau_{\max})_{BC} = \frac{T_{BC}\,c}{J} = \frac{45(10^3)(0.075)}{49.701(10^{-6})} = 67.9 \text{ MPa} \qquad \textbf{Ans.}$$

$$(\tau_{\max})_{CD} = \frac{T_{CD}\,c}{J} = \frac{30(10^3)(0.075)}{49.701(10^{-6})} = 45.3 \text{ MPa} \qquad \textbf{Ans.}$$

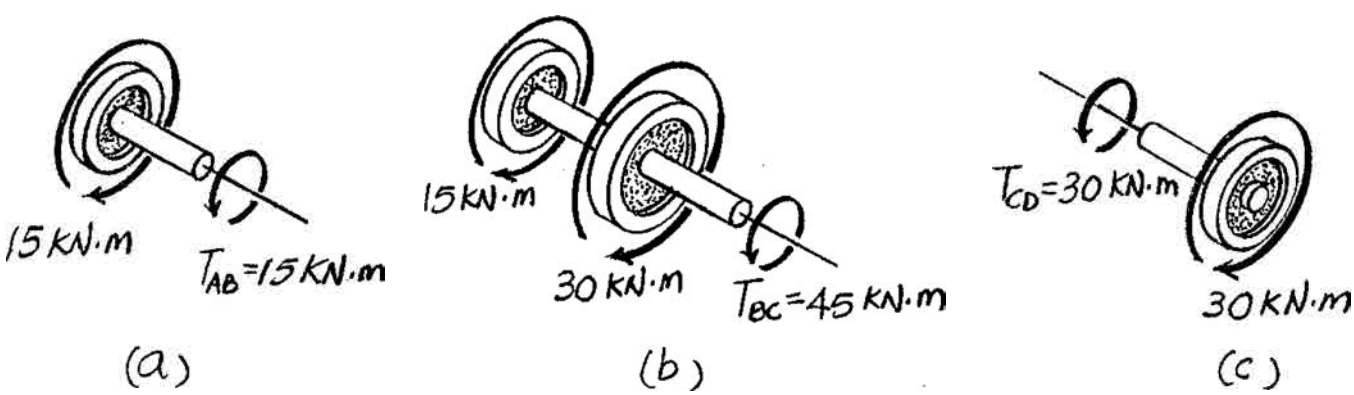

5–13. If the tubular shaft is made from material having an allowable shear stress of $\tau_{\text{allow}} = 85$ MPa, determine the required minimum wall thickness of the shaft to the nearest millimeter. The shaft has an outer diameter of 150 mm.

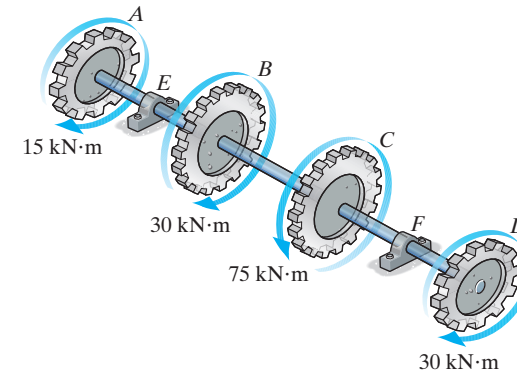

Internal Loadings: The internal torques developed in segments AB, BC, and CD of the assembly are shown in their respective free-body diagrams shown in Figs. a, b, and c.

Allowable Shear Stress: Segment BC is critical since it is subjected to the greatest internal torque. The polar moment of inertia of the shaft is $J = \frac{\pi}{2}(0.075^4 - c_i^4)$.

$$\tau_{\text{allow}} = \frac{T_{BC}\,c}{J}; \qquad 85(10^6) = \frac{45(10^3)(0.075)}{\frac{\pi}{2}(0.075^4 - c_i^4)}$$

$$c_i = 0.05022 \text{ m} = 50.22 \text{ mm}$$

Thus, the minimum wall thickness is

$$t = c_o - c_i = 75 - 50.22 = 24.78 \text{ mm} = 25 \text{ mm} \qquad \textbf{Ans.}$$

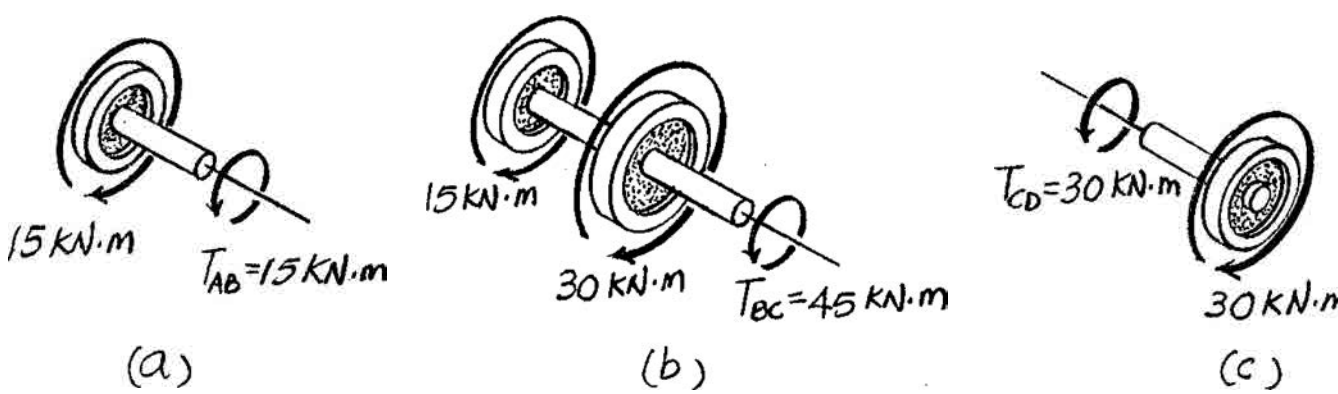

Ans:
Use $t = 25$ mm

5–14. A steel tube having an outer diameter of 2.5 in. is used to transmit 9 hp when turning at 27 rev/min. Determine the inner diameter d of the tube to the nearest $\frac{1}{8}$ in. if the allowable shear stress is $\tau_{\text{allow}} = 10$ ksi.

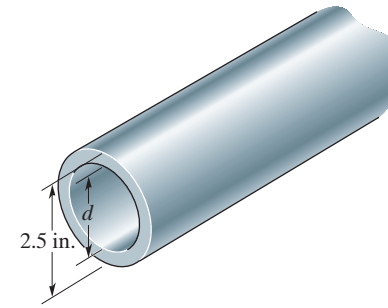

$$\omega = \frac{27(2\pi)}{60} = 2.8274 \text{ rad/s}$$

$$P = T\omega$$

$$9(550) = T(2.8274)$$

$$T = 1750.7 \text{ ft} \cdot \text{lb}$$

$$\tau_{\max} = \tau_{\text{allow}} = \frac{Tc}{J}$$

$$10(10^3) = \frac{1750.7(12)(1.25)}{\frac{\pi}{2}(1.25^4 - c_i^4)}$$

$$c_i = 0.9366 \text{ in.}$$

$$d = 1.873 \text{ in.}$$

Use $d = 1\frac{3}{4}$ in. **Ans.**

Ans:
Use $d = 1\frac{3}{4}$ in.

5–15. The solid shaft is made of material that has an allowable shear stress of $\tau_{\text{allow}} = 10$ MPa. Determine the required diameter of the shaft to the nearest millimeter.

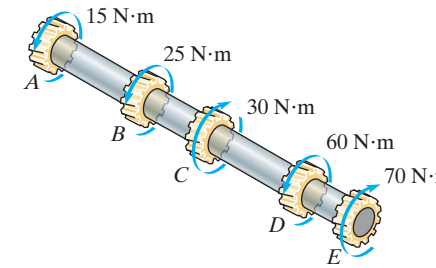

The internal torques developed in each segment of the shaft are shown in the torque diagram, Fig. *a*.

Segment DE is critical since it is subjected to the greatest internal torque. The polar moment of inertia of the shaft is $J = \frac{\pi}{2}\left(\frac{d}{2}\right)^4 = \frac{\pi}{32}d^4$. Thus,

$$\tau_{\text{allow}} = \frac{T_{DE}\,c}{J}; \qquad 10(10^6) = \frac{70\left(\frac{d}{2}\right)}{\frac{\pi}{32}d^4}$$

Use $d = 0.03291$ m $= 32.91$ mm $= 33$ mm **Ans.**

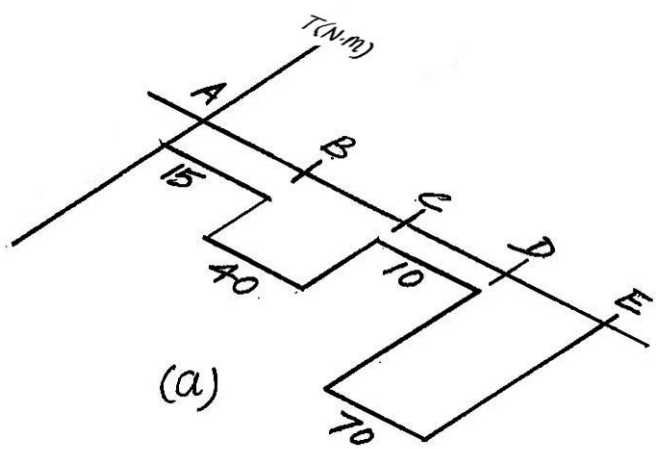

Ans:
Use $d = 33$ mm

***5–16.** The solid shaft has a diameter of 40 mm. Determine the absolute maximum shear stress in the shaft and sketch the shear-stress distribution along a radial line of the shaft where the shear stress is maximum.

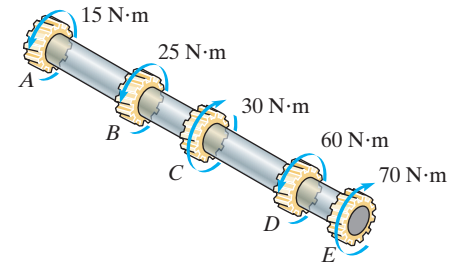

The internal torques developed in each segment of the shaft are shown in the torque diagram, Fig. *a*.

Since segment DE is subjected to the greatest torque, the absolute maximum shear stress occurs here. The polar moment of inertia of the shaft is $J = \frac{\pi}{2}(0.02^4) = 80(10^{-9})\pi \text{ m}^4$. Thus,

$$\tau_{\max} = \frac{T_{DE}\,c}{J} = \frac{70(0.02)}{80(10^{-9})\pi} = 5.57(10^6) \text{ Pa} = 5.57 \text{ MPa} \qquad \textbf{Ans.}$$

The shear stress distribution along the radial line is shown in Fig. *b*.

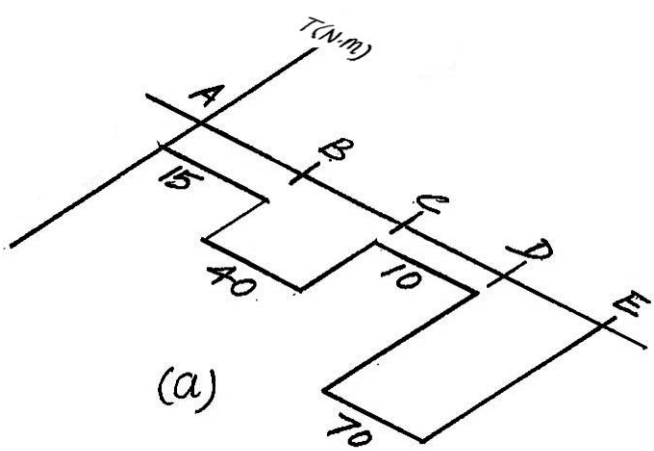

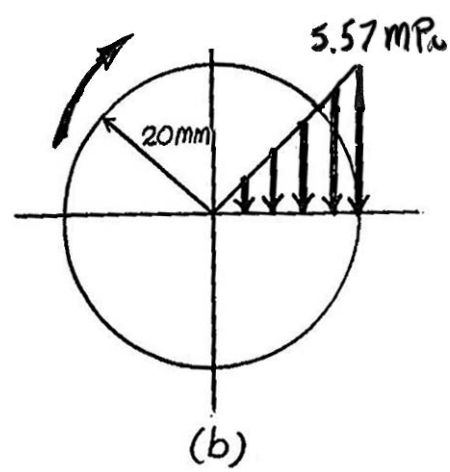

5–17. The rod has a diameter of 1 in. and a weight of 10 lb/ft. Determine the maximum torsional stress in the rod at a section located at A due to the rod's weight.

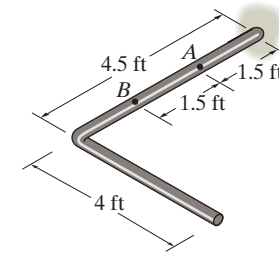

Here, we are only interested in the internal torque. Thus, other components of the internal loading are not indicated in the FBD of the cut segment of the rod, Fig. *a*.

$$\Sigma M_x = 0; \qquad T_A - 10(4)(2) = 0 \qquad T_A = 80\ \text{lb}\cdot\text{ft}\left(\frac{12\ \text{in}}{1\ \text{ft}}\right) = 960\ \text{lb}\cdot\text{in.}$$

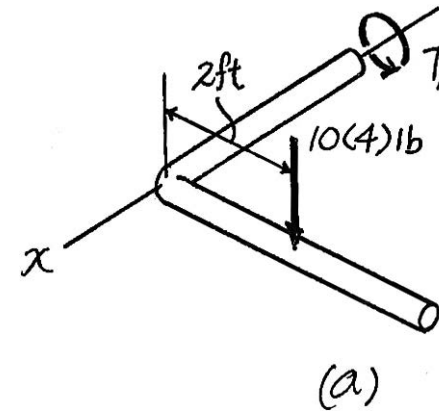

The polar moment of inertia of the cross section at A is $J = \frac{\pi}{2}(0.5^4) = 0.03125\pi\ \text{in}^4$.

Thus

$$\tau_{\max} = \frac{T_A c}{J} = \frac{960\ (0.5)}{0.03125\pi} = 4889.24\ \text{psi} = 4.89\ \text{ksi} \qquad \textbf{Ans.}$$

Ans:
$\tau_{\max} = 4.89$ ksi

5–18. The rod has a diameter of 1 in. and a weight of 15 lb/ft. Determine the maximum torsional stress in the rod at a section located at B due to the rod's weight.

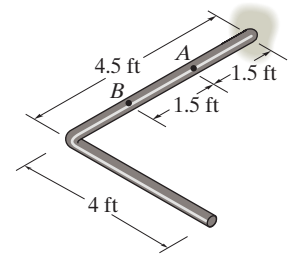

Here, we are only interested in the internal torque. Thus, other components of the internal loading are not indicated in the FBD of the cut segment of the rod, Fig. *a*.

$$\Sigma M_x = 0; \qquad T_B - 15(4)(2) = 0 \qquad T_B = 120\ \text{lb}\cdot\text{ft}\left(\frac{12\ \text{in}}{1\ \text{ft}}\right) = 1440\ \text{lb}\cdot\text{in.}$$

The polar moment of inertia of the cross-section at B is $J = \frac{\pi}{2}(0.5^4) = 0.03125\pi\ \text{in}^4$. Thus,

$$\tau_{max} = \frac{T_B\, c}{J} = \frac{1440(0.5)}{0.03125\pi} = 7333.86\ \text{psi} = 7.33\ \text{ksi} \qquad \textbf{Ans.}$$

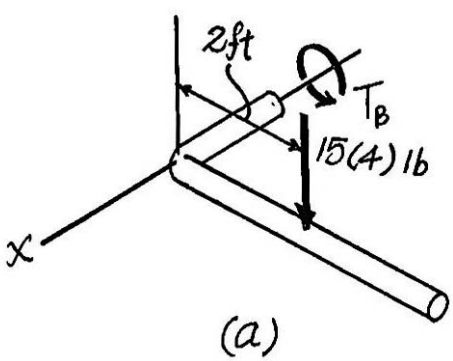

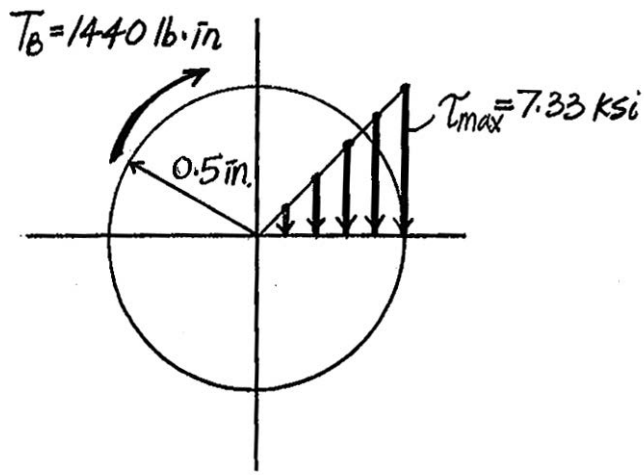

Ans:
$\tau_{max} = 7.33$ ksi

5–19. The shaft consists of solid 80-mm-diameter rod segments AB and CD, and the tubular segment BC which has an outer diameter of 100 mm and inner diameter of 80 mm. If the material has an allowable shear stress of $\tau_{\text{allow}} = 75$ MPa, determine the maximum allowable torque **T** that can be applied to the shaft.

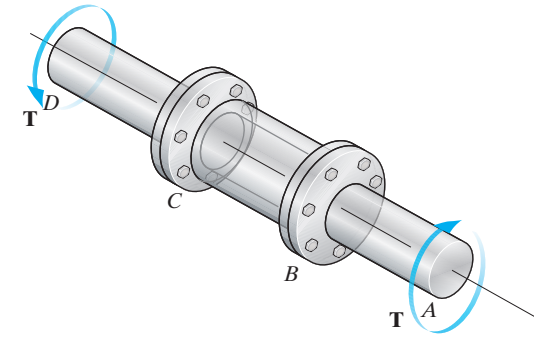

Internal Loadings: The internal torques developed in segments CD and BC are shown in Figs. a and b, respectively.

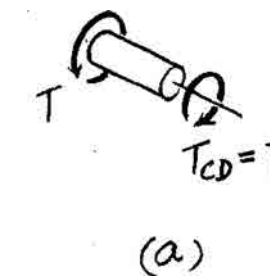

Allowable Shear Stress: The polar moments of inertia of segments CD and BC are $J_{CD} = \frac{\pi}{2}(0.04^4) = 1.28(10^{-6})\pi \text{ m}^4$ and $J_{BC} = \frac{\pi}{2}(0.05^4 - 0.04^4) = 1.845(10^{-6})\pi \text{ m}^4$.

$$\tau_{\text{allow}} = \frac{T_{CD}\, c_{CD}}{J_{CD}}; \quad 75(10^6) = \frac{T(0.04)}{1.28(10^{-6})\pi}$$

$$T = 7539.82 \text{ N} \cdot \text{m} = 7.54 \text{ kN} \cdot \text{m (controls)} \qquad \textbf{Ans.}$$

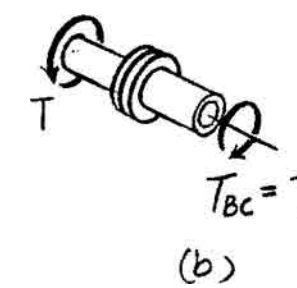

$$\tau_{\text{allow}} = \frac{T_{BC}\, c_{BC}}{J_{BC}}; \quad 75(10^6) = \frac{T(0.05)}{1.845(10^{-6})\pi}$$

$$T = 8694.36 \text{ N} \cdot \text{m} = 8.69 \text{ kN} \cdot \text{m}$$

Ans:
$T = 7.54 \text{ kN} \cdot \text{m}$

***5–20.** The shaft consists of rod segments AB and CD, and the tubular segment BC. If the torque $T = 10\ \text{kN}\cdot\text{m}$ is applied to the shaft, determine the required minimum diameter of the rod and the maximum inner diameter of the tube. The outer diameter of the tube is 120 mm, and the material has an allowable shear stress of $\tau_{\text{allow}} = 75$ MPa.

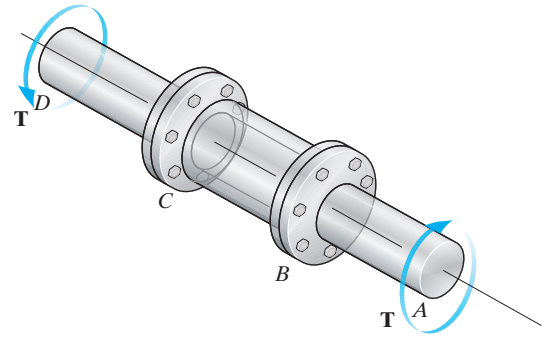

Internal Loadings: The internal torques developed in segments CD and BC are shown in Figs. a and b, respectively.

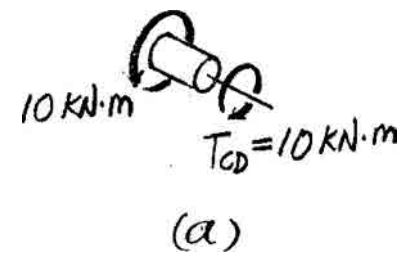

(a)

Allowable Shear Stress: The polar moments of inertia of the segments CD and BC are $J_{CD} = \frac{\pi}{2}\left(\frac{d_{CD}}{2}\right)^4 = \frac{\pi}{32}d_{CD}{}^4$ and $J_{BC} = \frac{\pi}{2}\left\{0.06^4 - \left[\frac{(d_{BC})_i}{2}\right]^4\right\} = \pi\left[6.48(10^{-6}) - \frac{(d_{BC})^4{}_i}{32}\right]$.

$$\tau_{\text{allow}} = \frac{T_{CD}c_{CD}}{J_{CD}};\quad 75(10^6) = \frac{10(10^3)(d_{CD}/2)}{\frac{\pi}{32}d_{CD}{}^4}$$

$$d_{CD} = 0.08790\ \text{m} = 87.9\ \text{mm} \qquad \textbf{Ans.}$$

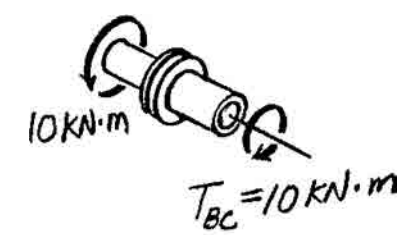

(b)

and

$$\tau_{\text{allow}} = \frac{T_{BC}c_{BC}}{J_{BC}};\quad 75(10^6) = \frac{10(10^3)(0.06)}{\pi\left[6.48(10^{-6}) - \frac{(d_{BC})^4{}_i}{32}\right]}$$

$$(d_{BC})_i = 0.1059\ \text{m} = 106\ \text{mm} \qquad \textbf{Ans.}$$

5–21. If the 40-mm-diameter rod is subjected to a uniform distributed torque of $t_0 = 1.5\ \text{kN}\cdot\text{m/m}$, determine the shear stress developed at point C.

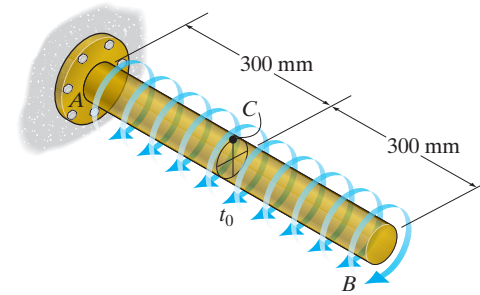

Internal Loadings: The internal torque developed on the cross-section of the shaft passes through point C as shown in Fig. a.

Allowable Shear Stress: The polar moment of inertia of the shaft is $J = \frac{\pi}{2}(0.02^4) = 80(10^{-9})\pi\ \text{m}^4$. We have

$$\tau_C = \frac{T_C c}{J} = \frac{1.5(10^3)(0.3)(0.02)}{80(10^{-9})\pi} = 35.8\ \text{MPa} \qquad \textbf{Ans.}$$

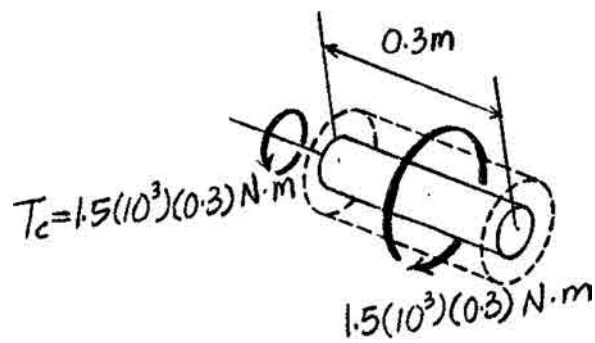

(a)

Ans:
$\tau_C = 35.8\ \text{MPa}$

5–22. If the rod is subjected to a uniform distributed torque of $t_0 = 1.5\ \text{kN}\cdot\text{m/m}$, determine the rod's minimum required diameter d if the material has an allowable shear stress of $\tau_{\text{allow}} = 75\ \text{MPa}$.

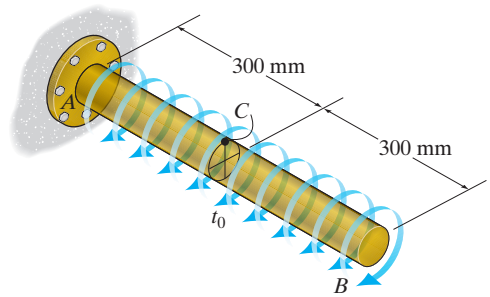

Internal Loadings: The maximum internal torque developed in the shaft, which occurs at A, is shown in Fig. a.

Allowable Shear Stress: The polar moment of inertia of the shaft is $J = \frac{\pi}{2}\left(\frac{d}{2}\right)^4 = \frac{\pi}{32}d^4$. We have

$$\tau_{\text{allow}} = \frac{T_{\max}c}{J}; \qquad 75(10^6) = \frac{1.5(10^3)(0.6)(d/2)}{\frac{\pi}{32}d^4}$$

$$d = 0.03939\ \text{m} = 39.4\ \text{mm} \qquad \textbf{Ans.}$$

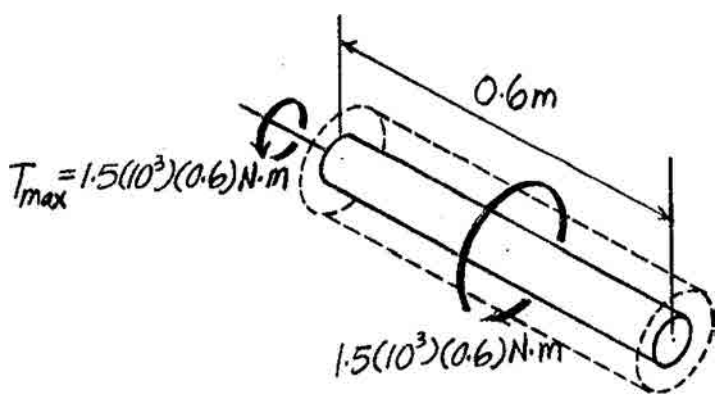

(a)

Ans:
$d = 39.4\ \text{mm}$

5–23. If the 40-mm-diameter rod is made from a material having an allowable shear stress of $\tau_{allow} = 75$ MPa, determine the maximum allowable intensity t_0 of the uniform distributed torque.

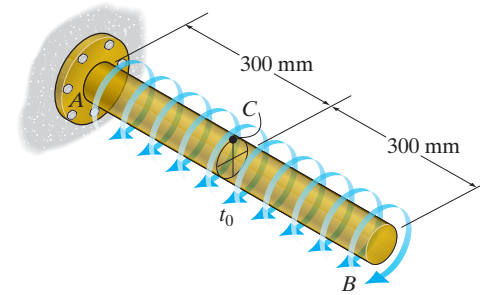

Internal Loadings: The maximum internal torque developed in the shaft, which occurs at A, is shown in Fig. a.

Allowable Shear Stress: The polar moment of inertia of the shaft is $J = \frac{\pi}{2}(0.02^4) = 80(10^{-9})\pi \text{ m}^4$. We have

$$\tau_{allow} = \frac{T_{max}\,c}{J}; \qquad 75(10^6) = \frac{t_0(0.6)(0.02)}{80(10^{-9})\pi}$$

$$t_0 = 1570.80 \text{ N}\cdot\text{m/m} = 1.57 \text{ kN}\cdot\text{m/m} \qquad \textbf{Ans.}$$

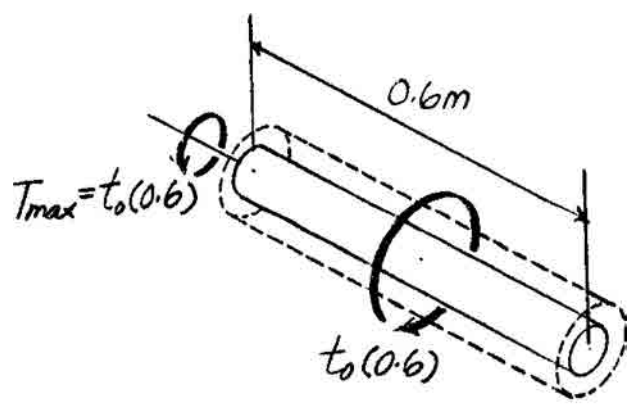

(a)

Ans:
$t_0 = 1.57 \text{ kN}\cdot\text{m/m}$

***5–24.** The copper pipe has an outer diameter of 2.50 in. and an inner diameter of 2.30 in. If it is tightly secured to the wall at C and a uniformly distributed torque is applied to it as shown, determine the shear stress developed at points A and B. These points lie on the pipe's outer surface. Sketch the shear stress on volume elements located at A and B.

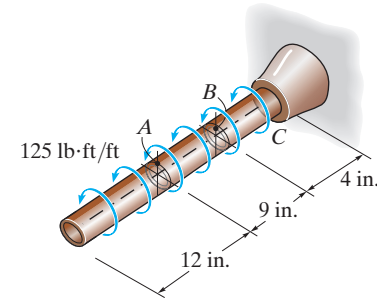

Internal Torque: As shown on FBD.

Maximum Shear Stress: Applying the torsion formula

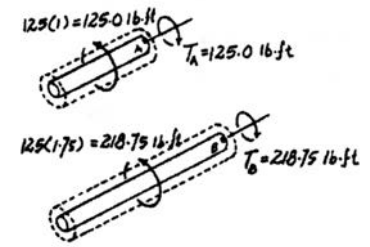

$$\tau_A = \frac{T_A c}{J}$$

$$= \frac{125.0(12)(1.25)}{\frac{\pi}{2}(1.25^4 - 1.15^4)} = 1.72 \text{ ksi} \qquad \textbf{Ans.}$$

$$\tau_B = \frac{T_B c}{J}$$

$$= \frac{218.75(12)(1.25)}{\frac{\pi}{2}(1.25^4 - 1.15^4)} = 3.02 \text{ ksi} \qquad \textbf{Ans.}$$

5–25. The copper pipe has an outer diameter of 2.50 in. and an inner diameter of 2.30 in. If it is tightly secured to the wall at C and it is subjected to the uniformly distributed torque along its entire length, determine the absolute maximum shear stress in the pipe. Discuss the validity of this result.

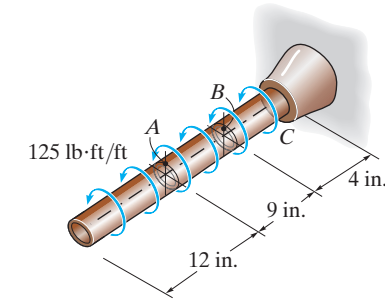

Internal Torque: The maximum torque occurs at the support C.

$$T_{\max} = (125\ \text{lb}\cdot\text{ft/ft})\left(\frac{25\ \text{in.}}{12\ \text{in./ft}}\right) = 260.42\ \text{lb}\cdot\text{ft}$$

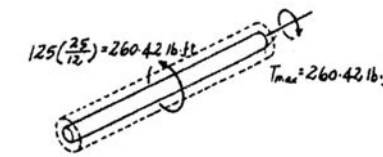

Maximum Shear Stress: Applying the torsion formula

$$\tau_{\substack{\text{abs}\\ \max}} = \frac{T_{\max}\, c}{J}$$

$$= \frac{260.42(12)(1.25)}{\frac{\pi}{2}(1.25^4 - 1.15^4)} = 3.59\ \text{ksi} \qquad \textbf{Ans.}$$

According to Saint-Venant's principle, application of the torsion formula should be as points sufficiently removed from the supports or points of concentrated loading.

Ans:
$\tau_{\substack{\text{abs}\\ \max}} = 3.59$ ksi

5–26. A cylindrical spring consists of a rubber annulus bonded to a rigid ring and shaft. If the ring is held fixed and a torque **T** is applied to the shaft, determine the maximum shear stress in the rubber.

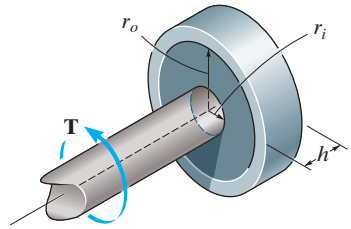

$$\tau = \frac{F}{A} = \frac{\frac{T}{r}}{2\,\pi\, r\, h} = \frac{T}{2\pi\, r^2\, h}$$

Shear stress is maximum when r is the smallest, i.e., $r = r_i$. Hence,

$$\tau_{\max} = \frac{T}{2\pi\, r_i^{\,2} h}$$ **Ans.**

Ans:

$$\tau_{\max} = \frac{T}{2\pi\, r_i^{\,2} h}$$

5–27. The assembly consists of the solid rod AB, tube BC, and the lever arm. If the rod and the tube are made of material having an allowable shear stress of $\tau_{\text{allow}} = 12$ ksi, determine the maximum allowable torque **T** that can be applied to the end of the rod and from there the couple forces P that can be applied to the lever arm. The diameter of the rod is 2 in., and the outer and inner diameters of the tube are 4 in. and 2 in., respectively.

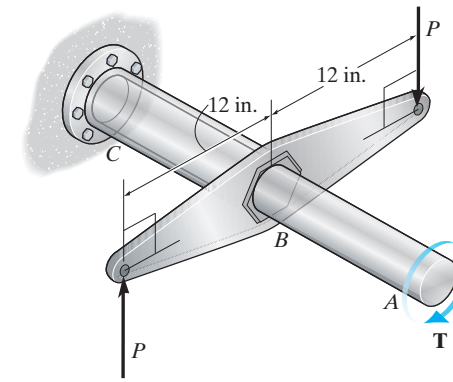

Internal Loadings: The internal torques developed in rod AB and tube BC of the shaft are shown in their respective free-body diagrams in Figs. a and b.

Allowable Shear Stress: The polar moments of inertia of rod AB and tube BC are $J_{AB} = \frac{\pi}{2}(1^4) = 0.5\pi \text{ in}^4$ and $J_{BC} = \frac{\pi}{2}(2^4 - 1^4) = 7.5\pi \text{ in}^4$. We will consider rod AB first.

$$\tau_{\text{allow}} = \frac{T_{AB}\, c_{AB}}{J_{AB}}; \qquad 12 = \frac{T(1)}{0.5\pi}$$

$$T = 18.85 \text{ kip}\cdot\text{in} = 1.57 \text{ kip}\cdot\text{ft} \qquad \textbf{Ans.}$$

Using this result, $T_{BC} = 18.85 + 24P$.

$$\tau_{\text{allow}} = \frac{T_{BC}\, c_{BC}}{J_{BC}}; \qquad 12 = \frac{(18.85 + 24P)(2)}{7.5\pi}$$

$$P = 5.11 \text{ kip} \qquad \textbf{Ans.}$$

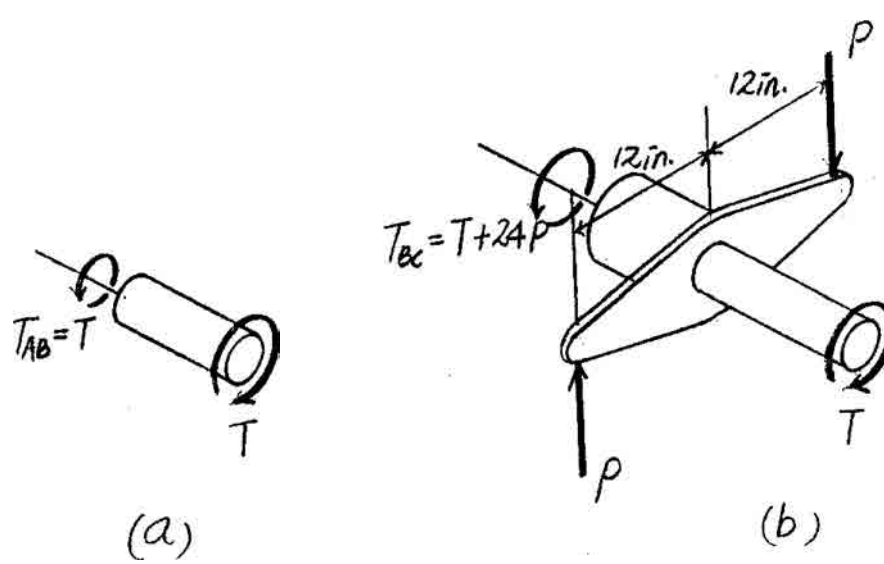

Ans:
$T = 1.57$ kip·ft, $P = 5.11$ kip

***5–28.** The assembly consists of the solid rod AB, tube BC, and the lever arm. If a torque of $T = 20$ kip · n. is applied to the rod and couple forces of $P = 5$ kip are applied to the lever arm, determine the required diameter for the rod, and the outer and inner diameters of the tube, if the ratio of the inner diameter d_i, to outer diameter d_o, is required to be $d_i/d_o = 0.75$. The rod and the tube are made of material having an allowable shear stress of $\tau_{\text{allow}} = 12$ ksi.

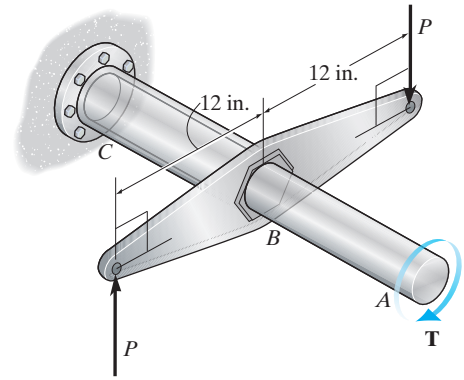

Internal Loadings: The internal torque developed in rod AB and tube BC of the shaft are shown in their respective free-body diagrams in Figs. *a* and *b*.

Allowable Shear Stress: We will consider rod AB first. The polar moment of inertia of rod AB is $J_{AB} = \frac{\pi}{2}\left(\frac{d_{AB}}{2}\right)^4 = \frac{\pi}{32} d_{AB}{}^4$.

$$\tau_{\text{allow}} = \frac{T_{AB}\, c_{AB}}{J_{AB}}; \qquad 12 = \frac{20(d_{AB}/2)}{\frac{\pi}{32} d_{AB}{}^4}$$

$$d_{AB} = 2.04 \text{ in.} = 2.04 \text{ in.} \qquad \textbf{Ans.}$$

The polar moment of inertia of tube BC is $J_{BC} = \frac{\pi}{2}\left[\left(\frac{d_o}{2}\right)^4 - \left(\frac{d_i}{2}\right)^4\right] = \frac{\pi}{2}\left[\frac{d_o{}^4}{16} - \left(\frac{0.75 d_o}{2}\right)^4\right] = 0.06711 d_o{}^4$.

$$\tau_{\text{allow}} = \frac{T_{BC}\, c_{BC}}{J_{BC}}; \qquad 12 = \frac{140(d_o/2)}{0.06711 d_o{}^4}$$

$$d_o = 4.430 \text{ in.} = 4.43 \text{ in.} \qquad \textbf{Ans.}$$

Thus,

$$d_i = 0.75\, d_o = 0.75(4.430) = 3.322 \text{ in.} = 3.32 \text{ in.} \qquad \textbf{Ans.}$$

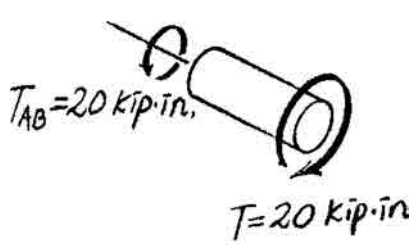

(a)

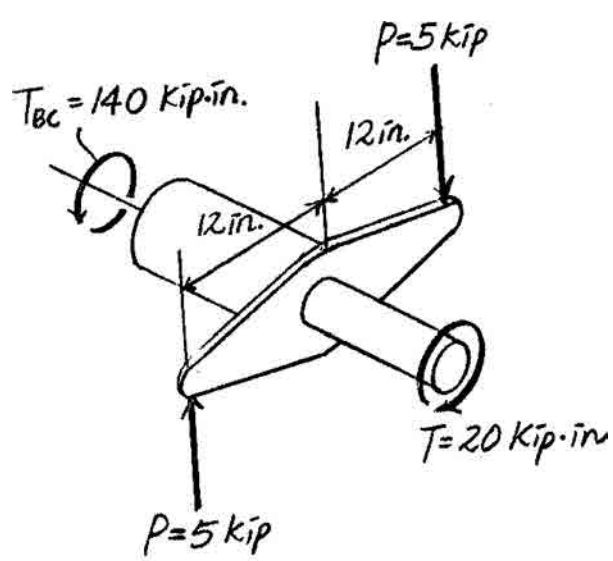

(b)

5–29. The steel shafts are connected together using a fillet weld as shown. Determine the average shear stress in the weld along section *a–a* if the torque applied to the shafts is $T = 60\ \text{N}\cdot\text{m}$. *Note:* The critical section where the weld fails is along section *a–a*.

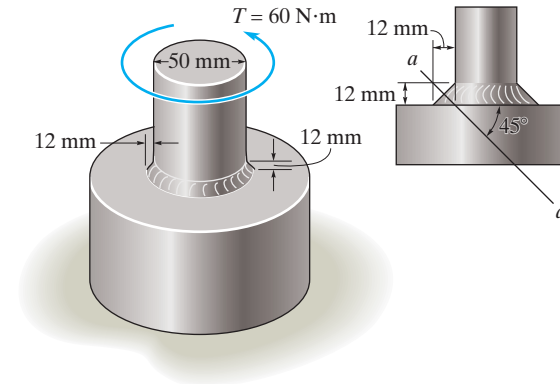

$$\tau_{avg} = \frac{V}{A} = \frac{(60/(0.025 + 0.003))}{2\pi(0.025 + 0.003)(0.012 \sin 45°)}$$

$$\tau_{avg} = 1.44\ \text{MPa}$$ **Ans.**

Ans:
$\tau_{avg} = 1.44\ \text{MPa}$

5–30. The shaft has a diameter of 80 mm. Due to friction at its surface within the hole, it is subjected to a variable torque described by the function $t = (25xe^{x^2})\ \mathrm{N \cdot m/m}$, where x is in meters. Determine the minimum torque T_0 needed to overcome friction and cause it to twist. Also, determine the absolute maximum stress in the shaft.

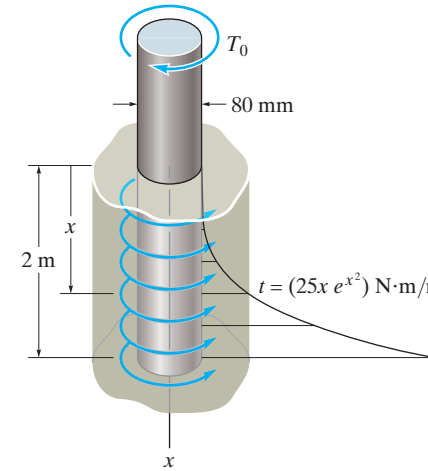

$$t = 25(x\,e^{x^2}); \qquad T_0 = \int_0^2 25(x\,e^{x^2})\,dx$$

Integrating numerically, we get

$$T_0 = 669.98 = 670\ \mathrm{N \cdot m}$$ **Ans.**

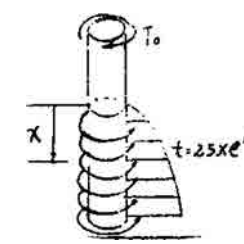

$$\tau_{\substack{\mathrm{abs}\\ \mathrm{max}}} = \frac{T_0\,c}{J} = \frac{(669.98)(0.04)}{\frac{\pi}{2}(0.04)^4} = 6.66\ \mathrm{MPa}$$ **Ans.**

Ans:

$T_0 = 670\ \mathrm{N \cdot m}$, $\tau_{\substack{\mathrm{abs}\\ \mathrm{max}}} = 6.66\ \mathrm{MPa}$

5–31. The solid steel shaft AC has a diameter of 25 mm and is supported by smooth bearings at D and E. It is coupled to a motor at C, which delivers 3 kW of power to the shaft while it is turning at 50 rev/s. If gears A and B remove 1 kW and 2 kW, respectively, determine the maximum shear stress developed in the shaft within regions AB and BC. The shaft is free to turn in its support bearings D and E.

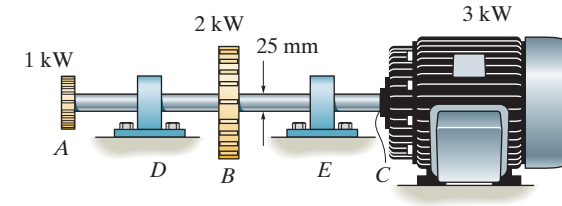

$$T_C = \frac{P}{\omega} = \frac{3(10^3)}{50(2\pi)} = 9.549 \text{ N} \cdot \text{m}$$

$$T_A = \frac{1}{3}T_C = 3.183 \text{ N} \cdot \text{m}$$

$$(\tau_{AB})_{\max} = \frac{T_C}{J} = \frac{3.183\ (0.0125)}{\frac{\pi}{2}(0.0125^4)} = 1.04 \text{ MPa}$$ **Ans.**

$$(\tau_{BC})_{\max} = \frac{T_C}{J} = \frac{9.549\ (0.0125)}{\frac{\pi}{2}(0.0125^4)} = 3.11 \text{ MPa}$$ **Ans.**

Ans:
$(\tau_{AB})_{\max} = 1.04$ MPa, $(\tau_{BC})_{\max} = 3.11$ MPa

***5–32.** The pump operates using the motor that has a power of 85 W. If the impeller at B is turning at 150 rev/min, determine the maximum shear stress developed in the 20-mm-diameter transmission shaft at A.

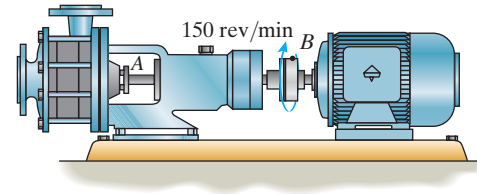

Internal Torque:

$$\omega = 150\,\frac{\text{rev}}{\text{min}}\left(\frac{2\pi\ \text{rad}}{\text{rev}}\right)\frac{1\ \text{min}}{60\ \text{s}} = 5.00\pi\ \text{rad/s}$$

$$P = 85\ \text{W} = 85\ \text{N}\cdot\text{m/s}$$

$$T = \frac{P}{\omega} = \frac{85}{5.00\pi} = 5.411\ \text{N}\cdot\text{m}$$

Maximum Shear Stress: Applying torsion formula

$$\tau_{\max} = \frac{T\,c}{J}$$

$$= \frac{5.411\ (0.01)}{\frac{\pi}{2}(0.01^4)} = 3.44\ \text{MPa} \qquad \textbf{Ans.}$$

5–33. The motor M is connected to the speed reducer C by the tubular shaft and coupling. If the motor supplies 20 hp and rotates the shaft at a rate of 600 rpm, determine the minimum inner and outer diameters d_i and d_o of the shaft if $d_i/d_o = 0.75$. The shaft is made from a material having an allowable shear stress of $\tau_{\text{allow}} = 12$ ksi.

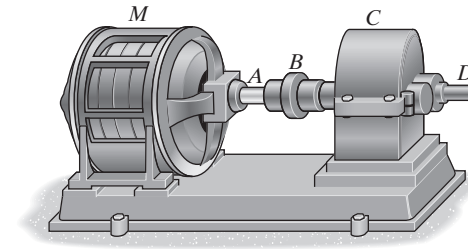

Internal Loading: The angular velocity of the shaft is

$$\omega = \left(600\,\frac{\text{rev}}{\text{min}}\right)\left(\frac{1\text{ min}}{60\text{ s}}\right)\left(\frac{2\pi\text{ rad}}{1\text{ rev}}\right) = 20\pi\text{ rad/s}$$

and the power is

$$P = 20\text{ hp}\left(\frac{550\,\text{ft}\cdot\text{lb/s}}{1\text{ hp}}\right) = 11\,000\,\text{ft}\cdot\text{lb/s}$$

We have

$$T = \frac{P}{\omega} = \frac{11\,000}{20\pi} = 175.07\text{ lb}\cdot\text{ft}\left(\frac{12\text{ in.}}{1\text{ ft}}\right) = 2100.84\text{ lb}\cdot\text{in.}$$

Allowable Shear Stress: The polar moment of inertia of the shaft is

$$J = \frac{\pi}{2}\left[\left(\frac{d_o}{2}\right)^4 - \left(\frac{d_i}{2}\right)^4\right] = \frac{\pi}{2}\left[\frac{d_o^{\,4}}{16} - \left(\frac{0.75d_o}{2}\right)^4\right] = 0.06711d_o^{\,4}.$$

$$\tau_{\text{allow}} = \frac{Tc}{J}; \qquad 12(10^3) = \frac{2100.84(d_o/2)}{0.06711d_o^{\,4}}$$

$$d_o = 1.0926\text{ in.} = 1.09\text{ in.} \qquad \textbf{Ans.}$$

Then

$$d_i = 0.75d_o = 0.75(1.0926) = 0.819\text{ in.} \qquad \textbf{Ans.}$$

Ans:
$d_o = 1.09$ in., $d_i = 0.819$ in.

5–34. The motor M is connected to the speed reducer C by the tubular shaft and coupling. The shaft has an outer and inner diameter of 1 in. and 0.75 in., respectively, and is made from a material having an allowable shear stress of $\tau_{\text{allow}} = 12$ ksi, when the motor supplies 20 hp of power. Determine the smallest allowable angular velocity of the shaft.

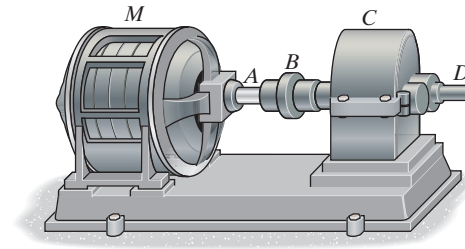

Allowable Shear Stress: The polar moment of inertia of the shaft is $J = \frac{\pi}{2}(0.5^4 - 0.375^4) = 0.06711 \text{ in}^4$. We have

$$\tau_{\text{allow}} = \frac{Tc}{J}; \qquad 12(10^3) = \frac{T(0.5)}{0.06711}$$

$$T = 1610.68 \text{ lb} \cdot \text{in}\left(\frac{1 \text{ ft}}{12 \text{ in.}}\right) = 134.22 \text{ lb} \cdot \text{ft}$$

Internal Loading: The power is

$$P = 20 \text{ hp}\left(\frac{550 \text{ ft} \cdot \text{lb/s}}{1 \text{ hp}}\right) = 11\,000 \text{ ft} \cdot \text{lb/s}$$

We have

$$T = \frac{P}{\omega}; \qquad 134.22 = \frac{11000}{\omega}$$

$$\omega = 82.0 \text{ rad/s} \qquad \textbf{Ans.}$$

Ans:
$\omega = 82.0$ rad/s

5–35. The 25-mm-diameter shaft on the motor is made of a material having an allowable shear stress of $\tau_{allow} = 75$ MPa. If the motor is operating at its maximum power of 5 kW, determine the minimum allowable rotation of the shaft.

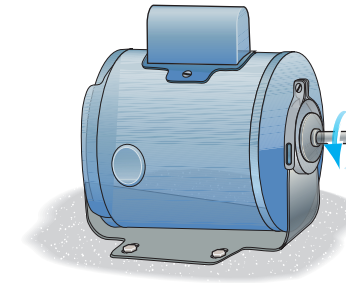

Allowable Shear Stress: The polar moment of inertia of the shaft is $J = \frac{\pi}{2}\left(0.0125^4\right) = 38.3495(10^{-9})\ \text{m}^4$.

$$\tau_{allow} = \frac{Tc}{J}; \qquad 75(10^6) = \frac{T(0.0125)}{38.3495(10^{-9})}$$

$$T = 230.10\ \text{N}\cdot\text{m}$$

Internal Loading:

$$T = \frac{P}{\omega}; \qquad 230.10 = \frac{5(10^3)}{\omega}$$

$$\omega = 21.7\ \text{rad/s} \qquad \textbf{Ans.}$$

Ans:
$\omega = 21.7$ rad/s

***5–36.** The drive shaft of the motor is made of a material having an allowable shear stress of $\tau_{\text{allow}} = 75$ MPa. If the outer diameter of the tubular shaft is 20 mm and the wall thickness is 2.5 mm, determine the maximum allowable power that can be supplied to the motor when the shaft is operating at an angular velocity of 1500 rev/min.

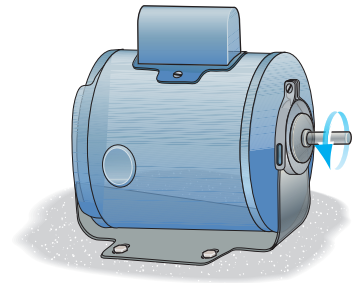

Internal Loading: The angular velocity of the shaft is

$$\omega = \left(1500\,\frac{\text{rev}}{\text{min}}\right)\left(\frac{2\pi\text{ rad}}{1\text{ rev}}\right)\left(\frac{1\text{ min}}{60\text{ s}}\right) = 50\pi\text{ rad/s}$$

We have

$$T = \frac{P}{\omega} = \frac{P}{50\pi}$$

Allowable Shear Stress: The polar moment of inertia of the shaft is $J = \frac{\pi}{2}\left(0.01^4 - 0.0075^4\right) = 10.7379(10^{-9})\text{ m}^4$.

$$\tau_{\text{allow}} = \frac{Tc}{J}; \qquad 75(10^6) = \frac{\left(\frac{P}{50\pi}\right)(0.01)}{10.7379(10^{-9})}$$

$$P = 12\,650.25\text{ W} = 12.7\text{ kW}$$ **Ans.**

5–37. A ship has a propeller drive shaft that is turning at 1500 rev/min while developing 1800 hp. If it is 8 ft long and has a diameter of 4 in., determine the maximum shear stress in the shaft caused by torsion.

Internal Torque:

$$\omega = 1500\,\frac{\text{rev}}{\text{min}}\left(\frac{2\pi\text{ rad}}{1\text{ rev}}\right)\frac{1\text{ min}}{60\text{ s}} = 50.0\,\pi\text{ rad/s}$$

$$P = 1800\text{ hp}\left(\frac{550\text{ ft}\cdot\text{lb/s}}{1\text{ hp}}\right) = 990\,000\text{ ft}\cdot\text{lb/s}$$

$$T = \frac{P}{\omega} = \frac{990\,000}{50.0\pi} = 6302.54\text{ lb}\cdot\text{ft}$$

Maximum Shear Stress: Applying torsion formula

$$\tau_{\max} = \frac{Tc}{J} = \frac{6302.54(12)(2)}{\frac{\pi}{2}(2^4)}$$

$$= 6018\text{ psi} = 6.02\text{ ksi}$$ **Ans.**

Note that the shaft length is irrelevant.

Ans:
$\tau_{\max} = 6.02$ ksi

5–38. The motor A develops a power of 300 W and turns its connected pulley at 90 rev/min. Determine the required diameters of the steel shafts on the pulleys at A and B if the allowable shear stress is $\tau_{\text{allow}} = 85$ MPa.

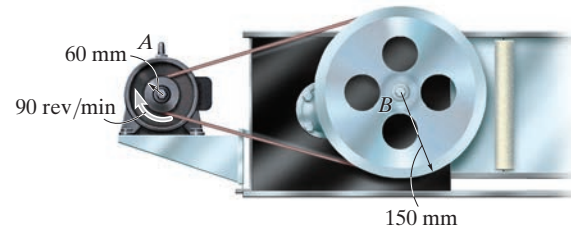

Internal Torque: For shafts A and B

$$\omega_A = 90\,\frac{\text{rev}}{\text{min}}\left(\frac{2\pi\ \text{rad}}{\text{rev}}\right)\frac{1\ \text{min}}{60\ \text{s}} = 3.00\pi\ \text{rad/s}$$

$$P = 300\ \text{W} = 300\ \text{N}\cdot\text{m/s}$$

$$T_A = \frac{P}{\omega_A} = \frac{300}{3.00\pi} = 31.83\ \text{N}\cdot\text{m}$$

$$\omega_B = \omega_A\left(\frac{r_A}{r_B}\right) = 3.00\pi\left(\frac{0.06}{0.15}\right) = 1.20\pi\ \text{rad/s}$$

$$P = 300\ \text{W} = 300\ \text{N}\cdot\text{m/s}$$

$$T_B = \frac{P}{\omega_B} = \frac{300}{1.20\pi} = 79.58\ \text{N}\cdot\text{m}$$

Allowable Shear Stress: For shaft A

$$\tau_{\max} = \tau_{\text{allow}} = \frac{T_A\,c}{J}$$

$$85\left(10^6\right) = \frac{31.83\left(\frac{d_A}{2}\right)}{\frac{\pi}{2}\left(\frac{d_A}{2}\right)^4}$$

$$d_A = 0.01240\ \text{m} = 12.4\ \text{mm}$$ **Ans.**

For shaft B

$$\tau_{\max} = \tau_{\text{allow}} = \frac{T_B\,c}{J}$$

$$85\left(10^6\right) = \frac{79.58\left(\frac{d_B}{2}\right)}{\frac{\pi}{2}\left(\frac{d_B}{2}\right)^4}$$

$$d_B = 0.01683\ \text{m} = 16.8\ \text{mm}$$ **Ans.**

Ans:
$d_A = 12.4$ mm, $d_B = 16.8$ mm

5–39. The solid steel shaft DF has a diameter of 25 mm and is supported by smooth bearings at D and E. It is coupled to a motor at F, which delivers 12 kW of power to the shaft while it is turning at 50 rev/s. If gears A, B, and C remove 3 kW, 4 kW, and 5 kW respectively, determine the maximum shear stress developed in the shaft within regions CF and BC. The shaft is free to turn in its support bearings D and E.

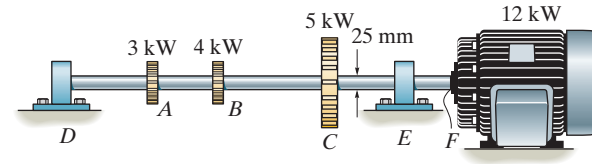

$$\omega = 50\,\frac{\text{rev}}{\text{s}}\left[\frac{2\pi\ \text{rad}}{\text{rev}}\right] = 100\,\pi\ \text{rad/s}$$

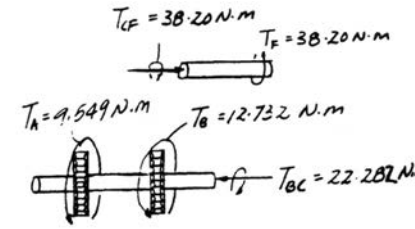

$$T_F = \frac{P}{\omega} = \frac{12(10^3)}{100\,\pi} = 38.20\ \text{N}\cdot\text{m}$$

$$T_A = \frac{P}{\omega} = \frac{3(10^3)}{100\,\pi} = 9.549\ \text{N}\cdot\text{m}$$

$$T_B = \frac{P}{\omega} = \frac{4(10^3)}{100\,\pi} = 12.73\ \text{N}\cdot\text{m}$$

$$(\tau_{\max})_{CF} = \frac{T_{CF}\,c}{J} = \frac{38.20(0.0125)}{\frac{\pi}{2}(0.0125^4)} = 12.5\ \text{MPa}$$ **Ans.**

$$(\tau_{\max})_{BC} = \frac{T_{BC}\,c}{J} = \frac{22.282(0.0125)}{\frac{\pi}{2}(0.0125^4)} = 7.26\ \text{MPa}$$ **Ans.**

Ans:
$(\tau_{\max})_{CF} = 12.5$ MPa, $(\tau_{\max})_{BC} = 7.26$ MPa

***5–40.** Determine the absolute maximum shear stress developed in the shaft in Prob. 5–39.

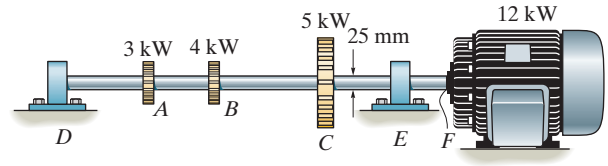

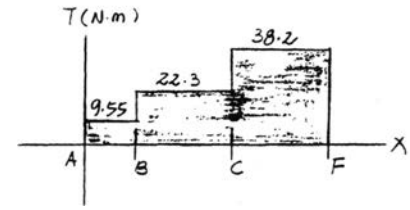

$$\omega = 50\,\frac{\text{rev}}{\text{s}}\left[\frac{2\pi\ \text{rad}}{\text{rev}}\right] = 100\,\pi\ \text{rad/s}$$

$$T_F = \frac{P}{\omega} = \frac{12(10^3)}{100\pi} = 38.20\ \text{N}\cdot\text{m}$$

$$T_A = \frac{P}{\omega} = \frac{3(10^3)}{100\pi} = 9.549\ \text{N}\cdot\text{m}$$

$$T_B = \frac{P}{\omega} = \frac{4(10^3)}{100\pi} = 12.73\ \text{N}\cdot\text{m}$$

From the torque diagram,

$$T_{\max} = 38.2\ \text{N}\cdot\text{m}$$

$$\tau_{\substack{\text{abs}\\ \max}} = \frac{Tc}{J} = \frac{38.2(0.0125)}{\frac{\pi}{2}(0.0125^4)} = 12.5\ \text{MPa}$$ **Ans.**

5–41. The A-36 steel tubular shaft is 2 m long and has an outer diameter of 50 mm. When it is rotating at 40 rad/s, it transmits 25 kW of power from the motor M to the pump P. Determine the smallest thickness of the tube if the allowable shear stress is $\tau_{\text{allow}} = 80$ MPa.

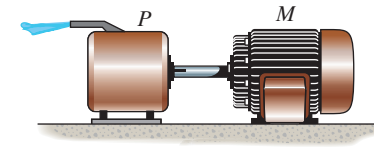

The internal torque in the shaft is

$$T = \frac{P}{\omega} = \frac{25(10^3)}{40} = 625 \text{ N} \cdot \text{m}$$

The polar moment of inertia of the shaft is $J = \frac{\pi}{2}(0.025^4 - c_i^{\,4})$. Thus,

$$\tau_{\text{allow}} = \frac{Tc}{J}; \qquad 80(10^6) = \frac{625(0.025)}{\frac{\pi}{2}(0.025^4 - c_i^{\,4})}$$

$$c_i = 0.02272 \text{ m}$$

So that

$$t = 0.025 - 0.02272$$

$$= 0.002284 \text{ m} = 2.284 \text{ mm} = 2.3 \text{ mm}$$ **Ans.**

Ans:
$t = 2.3$ mm

5–42. The A-36 solid steel shaft is 2 m long and has a diameter of 60 mm. It is required to transmit 60 kW of power from the motor M to the pump P. Determine the smallest angular velocity the shaft can have if the allowable shear stress is $\tau_{\text{allow}} = 80$ MPa.

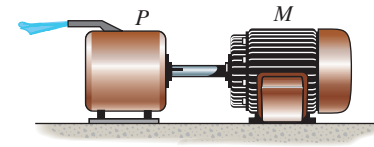

The polar moment of inertia of the shaft is $J = \frac{\pi}{2}(0.03^4) = 0.405(10^{-6})\pi \text{ m}^4$. Thus,

$$\tau_{\text{allow}} = \frac{Tc}{J}; \qquad 80(10^6) = \frac{T(0.03)}{0.405(10^{-6})\pi}$$

$$T = 3392.92 \text{ N} \cdot \text{m}$$

$$P = T\omega; \qquad 60(10^3) = 3392.92\,\omega$$

$$\omega = 17.68 \text{ rad/s} = 17.7 \text{ rad/s} \qquad \textbf{Ans.}$$

Ans:
$\omega = 17.7$ rad/s

5–43. The solid shaft has a linear taper from r_A at one end to r_B at the other. Derive an equation that gives the maximum shear stress in the shaft at a location x along the shaft's axis.

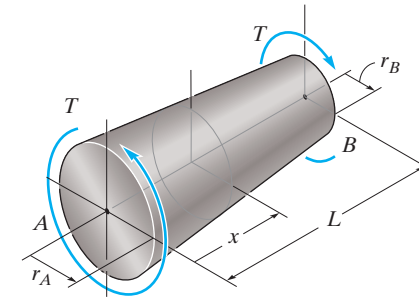

$$r = r_B + \frac{r_A - r_B}{L}(L - x) = \frac{r_B L + (r_A - r_B)(L - x)}{L}$$

$$= \frac{r_A(L - x) + r_B x}{L}$$

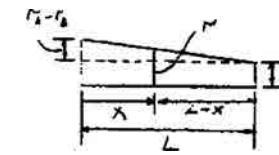

$$\tau_{\max} = \frac{Tc}{J} = \frac{Tr}{\frac{\pi}{2} r^4} = \frac{2T}{\pi r^3}$$

$$= \frac{2T}{\pi\left[\dfrac{r_A(L - x) + r_B x}{L}\right]^3} = \frac{2TL^3}{\pi[r_A(L - x) + r_B x]^3}$$ **Ans.**

Ans:

$$\tau_{\max} = \frac{2TL^3}{\pi[r_A(L - x) + r_B x]^3}$$

***5–44.** The rod has a diameter of 0.5 in. and weight of 5 lb/ft. Determine the maximum torsional stress in the rod at a section located at A due to the rod's weight.

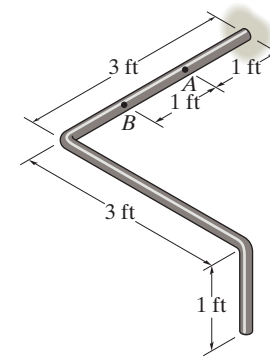

$\Sigma M_x = 0;\qquad T_x - 15(1.5) - 5(3) = 0;$

$T_x = 37.5 \text{ lb} \cdot \text{ft}$

$$(\tau_A)_{\max} = \frac{Tc}{J} = \frac{37.5(12)(0.25)}{\frac{\pi}{2}(0.25)^4}$$

$= 18.3 \text{ ksi}$ **Ans.**

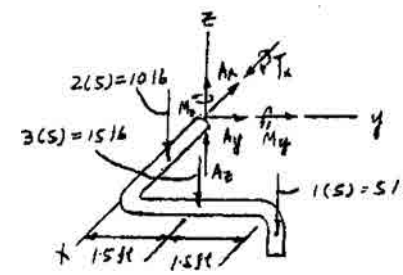

5–45. Solve Prob. 5–44 for the maximum torsional stress at B.

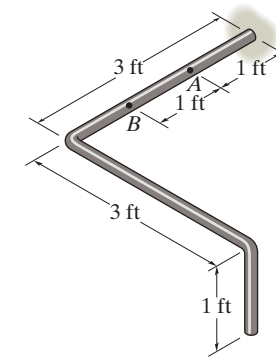

$\Sigma M_x = 0; \qquad -15(1.5) - 5(3) + T_x = 0;$

$$T_x = 37.5 \text{ lb} \cdot \text{ft} = 450 \text{ lb} \cdot \text{in.}$$

$$(\tau_B)_{\max} = \frac{Tc}{J} = \frac{450(0.25)}{\frac{\pi}{2}(0.25)^4} = 18.3 \text{ ksi}$$ **Ans.**

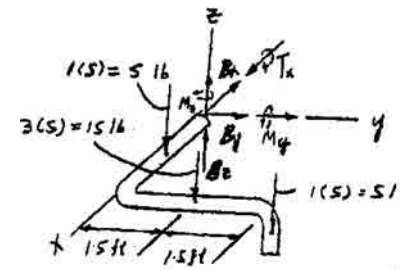

Ans:
$(\tau_B)_{\max} = 18.3$ ksi

5–46. A motor delivers 500 hp to the shaft, which is tubular and has an outer diameter of 2 in. If it is rotating at 200 rad/s, determine its largest inner diameter to the nearest $\frac{1}{8}$ in. if the allowable shear stress for the material is $\tau_{\text{allow}} = 25$ ksi.

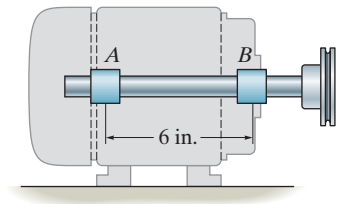

$$P = 500 \text{ hp}\left[\frac{550 \text{ ft}\cdot\text{lb/s}}{1 \text{ hp}}\right] = 275000 \text{ ft}\cdot\text{lb/s}$$

$$T = \frac{P}{\omega} = \frac{275000}{200} = 1375 \text{ lb}\cdot\text{ft}$$

$$\tau_{\max} = \tau_{\text{allow}} = \frac{Tc}{J}$$

$$25(10^3) = \frac{1375(12)(1)}{\frac{\pi}{2}[1^4 - (\frac{d_i}{2})^4]}$$

$$d_i = 1.745 \text{ in.}$$

Use $d_i = 1\frac{5}{8}$ in. **Ans.**

Ans:
Use $d_i = 1\frac{5}{8}$ in.

5–47. The propellers of a ship are connected to an A-36 steel shaft that is 60 m long and has an outer diameter of 340 mm and inner diameter of 260 mm. If the power output is 4.5 MW when the shaft rotates at 20 rad/s, determine the maximum torsional stress in the shaft and its angle of twist.

$$T = \frac{P}{\omega} = \frac{4.5(10^6)}{20} = 225(10^3)\ \text{N}\cdot\text{m}$$

$$\tau_{\max} = \frac{Tc}{J} = \frac{225(10^3)(0.170)}{\frac{\pi}{2}[(0.170)^4 - (0.130)^4]} = 44.3\ \text{MPa}$$ **Ans.**

$$\phi = \frac{TL}{JG} = \frac{225\left(10^3\right)(60)}{\frac{\pi}{2}[(0.170)^4 - (0.130)^4)75(10^9)} = 0.2085\ \text{rad} = 11.9^\circ$$ **Ans.**

Ans:

$\tau_{\max} = 44.3$ MPa, $\phi = 11.9^\circ$

***5–48.** The solid shaft of radius c is subjected to a torque **T** at its ends. Show that the maximum shear strain developed in the shaft is $\gamma_{max} = Tc/JG$. What is the shear strain on an element located at point A, $c/2$ from the center of the shaft? Sketch the strain distortion of this element.

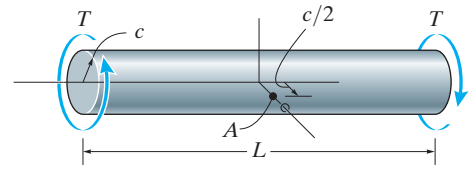

From the geometry:

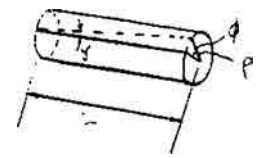

$$\gamma L = \rho\,\phi; \qquad \gamma = \frac{\rho\,\phi}{L}$$

Since $\phi = \dfrac{TL}{JG}$, then

$$\gamma = \frac{T\rho}{JG} \qquad (1)$$

However the maximum shear strain occurs when $\rho = c$

$$\gamma_{max} = \frac{Tc}{JG} \qquad \textbf{QED}$$

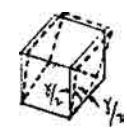

Shear strain when $\rho = \dfrac{c}{2}$ is from Eq. (1),

$$\gamma = \frac{T(c/2)}{JG} = \frac{Tc}{2\,JG} \qquad \textbf{Ans.}$$

5–49. The A-36 steel axle is made from tubes AB and CD and a solid section BC. It is supported on smooth bearings that allow it to rotate freely. If the gears, fixed to its ends, are subjected to 85-N · m torques, determine the angle of twist of gear A relative to gear D. The tubes have an outer diameter of 30 mm and an inner diameter of 20 mm. The solid section has a diameter of 40 mm.

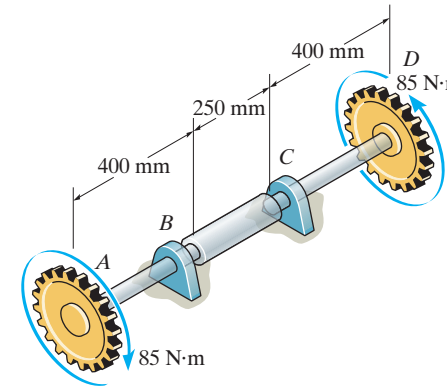

$$\phi_{A/D} = \Sigma \frac{TL}{JG}$$

$$= \frac{2(85)(0.4)}{\frac{\pi}{2}(0.015^4 - 0.01^4)(75)(10^9)} + \frac{(85)(0.25)}{\frac{\pi}{2}(0.02^4)(75)(10^9)}$$

$$= 0.01534 \text{ rad} = 0.879°$$ **Ans.**

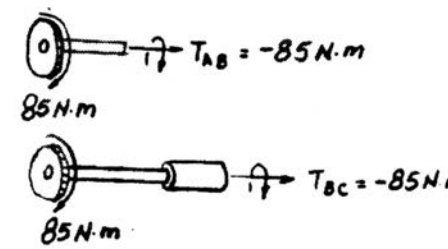

Ans:

$\phi_{A/D} = 0.879°$

5–50. The hydrofoil boat has an A992 steel propeller shaft that is 100 ft long. It is connected to an in-line diesel engine that delivers a maximum power of 2500 hp and causes the shaft to rotate at 1700 rpm. If the outer diameter of the shaft is 8 in. and the wall thickness is $\frac{3}{8}$ in., determine the maximum shear stress developed in the shaft. Also, what is the "wind up," or angle of twist in the shaft at full power?

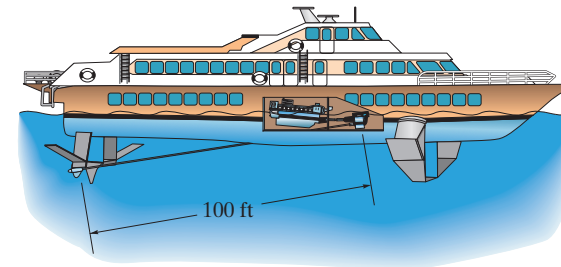

Internal Torque:

$$\omega = 1700\,\frac{\text{rev}}{\text{min}}\left(\frac{2\pi\ \text{rad}}{\text{rev}}\right)\frac{1\ \text{min}}{60\ \text{s}} = 56.67\pi\ \text{rad/s}$$

$$P = 2500\ \text{hp}\left(\frac{550\ \text{ft}\cdot\text{lb/s}}{1\ \text{hp}}\right) = 1\,375\,000\ \text{ft}\cdot\text{lb/s}$$

$$T = \frac{P}{\omega} = \frac{1\,375\,000}{56.67\pi} = 7723.7\ \text{lb}\cdot\text{ft}$$

Maximum Shear Stress: Applying torsion Formula.

$$\tau_{\max} = \frac{T\,c}{J}$$

$$= \frac{7723.7(12)(4)}{\frac{\pi}{2}(4^4 - 3.625^4)} = 2.83\ \text{ksi} \qquad \textbf{Ans.}$$

Angle of Twist:

$$\phi = \frac{TL}{JG} = \frac{7723.7(12)(100)(12)}{\frac{\pi}{2}(4^4 - 3.625^4)11.0(10^6)}$$

$$= 0.07725\ \text{rad} = 4.43^\circ \qquad \textbf{Ans.}$$

Ans:
$\tau_{\max} = 2.83$ ksi, $\phi = 4.43^\circ$

5–51. The 60-mm-diameter shaft is made of 6061-T6 aluminum having an allowable shear stress of $\tau_{\text{allow}} = 80$ MPa. Determine the maximum allowable torque **T**. Also, find the corresponding angle of twist of disk A relative to disk C.

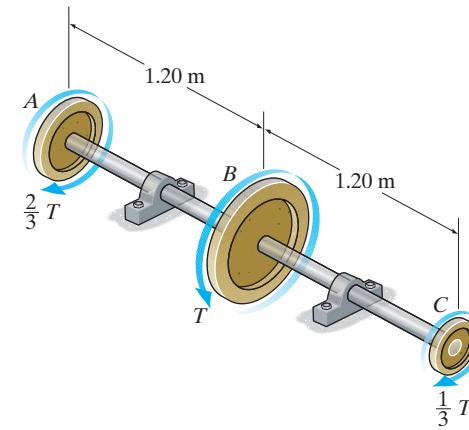

Internal Loading: The internal torques developed in segments AB and BC of the shaft are shown in Figs. a and b, respectively.

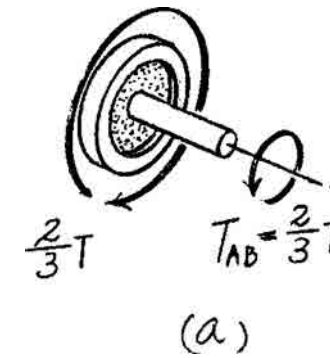

Allowable Shear Stress: Segment AB is critical since it is subjected to a greater internal torque. The polar moment of inertia of the shaft is $J = \frac{\pi}{2}(0.03^4) = 0.405(10^{-6})\pi \text{ m}^4$. We have

$$\tau_{\text{allow}} = \frac{T_{AB}\,c}{J}; \qquad 80(10^6) = \frac{(\frac{2}{3}T)(0.03)}{0.405(10^{-6})\pi}$$

$$T = 5089.38 \text{ N}\cdot\text{m} = 5.09 \text{ kN}\cdot\text{m} \qquad \textbf{Ans.}$$

Angle of Twist: The internal torques developed in segments AB and BC of the shaft are $T_{AB} = \frac{2}{3}(5089.38) = 3392.92 \text{ N}\cdot\text{m}$ and $T_{BC} = -\frac{1}{3}(5089.38) = -1696.46 \text{ N}\cdot\text{m}$. We have

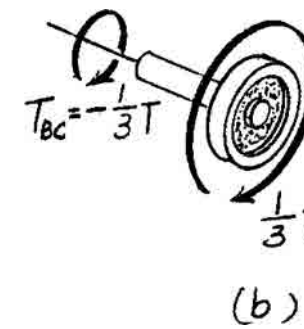

$$\phi_{A/C} = \Sigma\frac{T_i L_i}{J_i G_i} = \frac{T_{AB}L_{AB}}{JG_{al}} + \frac{T_{BC}L_{BC}}{JG_{al}}$$

$$\phi_{A/C} = \frac{3392.92(1.20)}{0.405(10^{-6})\pi(26)(10^9)} + \frac{-1696.46(1.20)}{0.405(10^{-6})\pi(26)(10^9)}$$

$$= 0.06154 \text{ rad} = 3.53^\circ \qquad \textbf{Ans.}$$

Ans:
$T = 5.09 \text{ kN}\cdot\text{m}$, $\phi_{A/C} = 3.53^\circ$

***5–52.** The 60-mm-diameter shaft is made of 6061-T6 aluminum. If the allowable shear stress is $\tau_{\text{allow}} = 80$ MPa, and the angle of twist of disk A relative to disk C is limited so that it does not exceed 0.06 rad, determine the maximum allowable torque **T**.

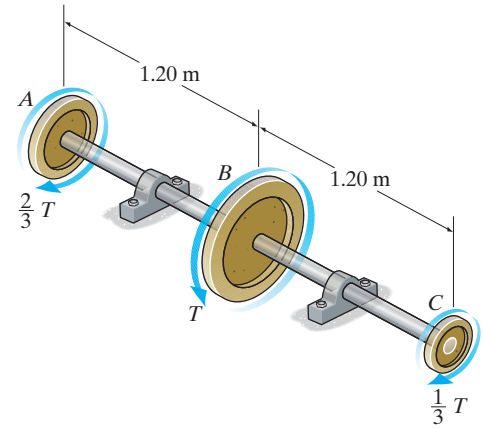

Internal Loading: The internal torques developed in segments AB and BC of the shaft are shown in Figs. a and b, respectively.

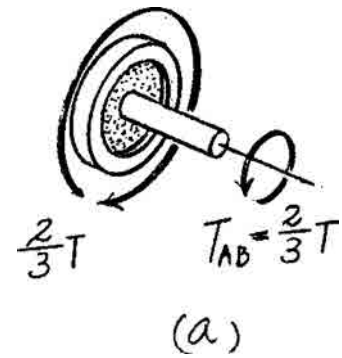

(a)

Allowable Shear Stress: Segment AB is critical since it is subjected to a greater internal torque. The polar moment of inertia of the shaft is $J = \frac{\pi}{2}(0.03^4) = 0.405(10^{-6})\pi \text{ m}^4$. We have

$$\tau_{\text{allow}} = \frac{T_{AB}\,c}{J}; \qquad 80(10^3) = \frac{(\frac{2}{3}T)(0.03)}{0.405(10^{-6})\pi}$$

$$T = 5089.38 \text{ N}\cdot\text{m} = 5.089 \text{ kN}\cdot\text{m}$$

Angle of Twist: It is required that $\phi_{A/C} = 0.06$ rad. We have

$$\phi_{A/C} = \Sigma\frac{T_i L_i}{J_i G_i} = \frac{T_{AB}L_{AB}}{JG_{al}} + \frac{T_{BC}L_{BC}}{JG_{al}}$$

$$0.06 = \frac{(\frac{2}{3}T)(1.2)}{0.405(10^{-6})\pi(26)(10^9)} + \frac{(-\frac{1}{3}T)(1.2)}{0.405(10^{-6})\pi(26)(10^9)}$$

$$T = 4962.14 \text{ N}\cdot\text{m} = 4.96 \text{ kN}\cdot\text{m (controls)} \qquad \textbf{Ans.}$$

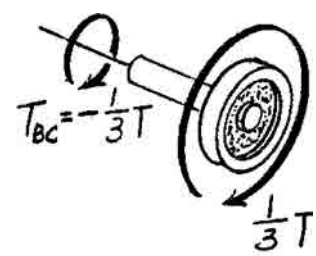

(b)

5–53. The 20-mm-diameter A-36 steel shaft is subjected to the torques shown. Determine the angle of twist of the end B.

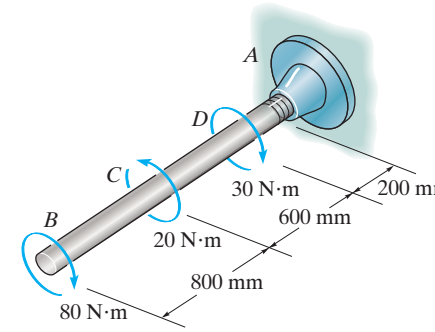

Internal Torque: As shown on FBD.

Angle of Twist:

$$\phi_B = \sum \frac{TL}{JG}$$

$$= \frac{1}{\frac{\pi}{2}(0.01^4)(75.0)(10^9)}[-80.0(0.8) + (-60.0)(0.6) + (-90.0)(0.2)]$$

$$= -0.1002 \text{ rad} = 5.74° \qquad \textbf{Ans.}$$

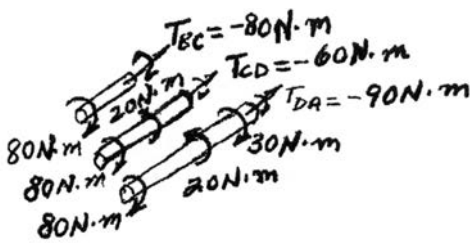

Ans:
$\phi_B = 5.74°$

5–54. The shaft is made of A992 steel with the allowable shear stress of $\tau_{\text{allow}} = 75$ MPa. If gear B supplies 15 kW of power, while gears A, C, and D withdraw 6 kW, 4 kW, and 5 kW, respectively, determine the required minimum diameter d of the shaft to the nearest millimeter. Also, find the corresponding angle of twist of gear A relative to gear D. The shaft is rotating at 600 rpm.

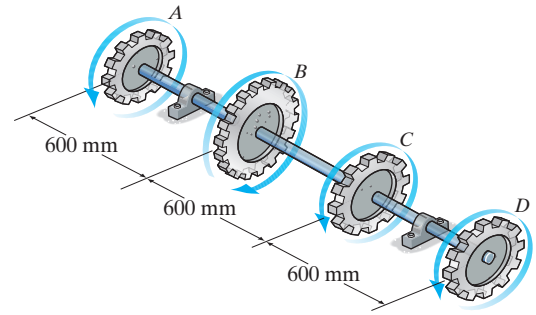

Internal Loading: The angular velocity of the shaft is

$$\omega = \left(600\,\frac{\text{rev}}{\text{min}}\right)\left(\frac{1\text{ min}}{60\text{ s}}\right)\left(\frac{2\pi\text{ rad}}{1\text{ rev}}\right) = 20\pi\text{ rad/s}$$

Thus, the torque exerted on gears A, C, and D are

$$T_A = \frac{P_A}{\omega} = \frac{6(10^3)}{20\pi} = 95.49\,\text{N}\cdot\text{m}$$

$$T_C = \frac{P_C}{\omega} = \frac{4(10^3)}{20\pi} = 63.66\,\text{N}\cdot\text{m}$$

$$T_D = \frac{P_D}{\omega} = \frac{5(10^3)}{20\pi} = 79.58\,\text{N}\cdot\text{m}$$

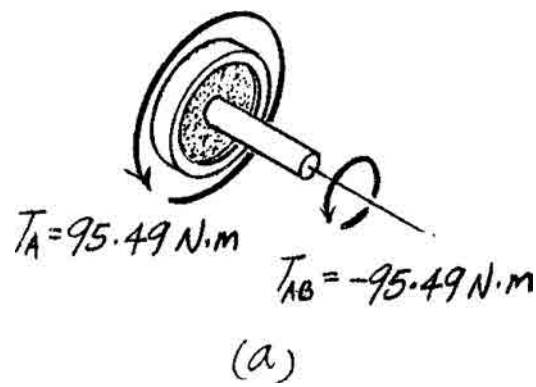

The internal torque developed in segments AB, CD, and BC of the shaft are shown in Figs. a, b, and c, respectively.

Allowable Shear Stress: Segment BC of the shaft is critical since it is subjected to a greater internal torque.

$$\tau_{\text{allow}} = \frac{T_{BC}\,c}{J}; \qquad 75(10^6) = \frac{143.24\left(\frac{d}{2}\right)}{\frac{\pi}{2}\left(\frac{d}{2}\right)^4}$$

$$d = 0.02135\text{ m} = 21.35\text{ mm}$$

Use $\qquad d = 22$ mm **Ans.**

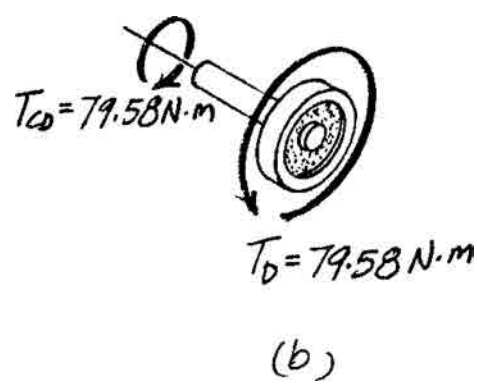

Angle of Twist: The polar moment of inertia of the shaft is $J = \frac{\pi}{2}(0.011^4) = 7.3205(10^{-9})\pi\text{ m}^4$. We have

$$\phi_{A/D} = \Sigma\frac{T_iL_i}{J_iG_i} = \frac{T_{AB}L_{AB}}{JG_{st}} + \frac{T_{BC}L_{BC}}{JG_{st}} + \frac{T_{CD}L_{CD}}{JG_{st}}$$

$$\phi_{A/D} = \frac{0.6}{7.3205(10^{-9})\pi(75)(10^9)}(-95.49 + 143.24 + 79.58)$$

$$= 0.04429\text{ rad} = 2.54^\circ$$ **Ans.**

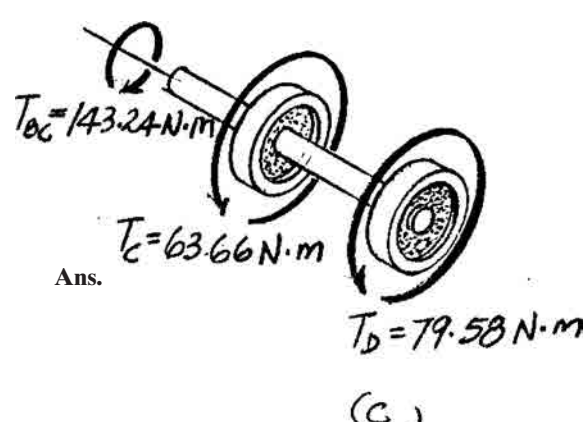

Ans:
Use $d = 22$ mm, $\phi_{A/D} = 2.54^\circ$

5–55. Gear B supplies 15 kW of power, while gears A, C, and D withdraw 6 kW, 4 kW, and 5 kW, respectively. If the shaft is made of steel with the allowable shear stress of $\tau_{\text{allow}} = 75$ MPa, and the relative angle of twist between any two gears cannot exceed 0.05 rad, determine the required minimum diameter d of the shaft to the nearest millimeter. The shaft is rotating at 600 rpm.

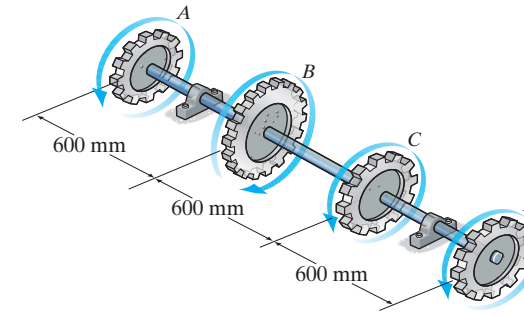

Internal Loading: The angular velocity of the shaft is

$$\omega = \left(600\,\frac{\text{rev}}{\text{min}}\right)\left(\frac{1\text{ min}}{60\text{ s}}\right)\left(\frac{2\pi\text{ rad}}{1\text{ rev}}\right) = 20\pi\text{ rad/s}$$

Thus, the torque exerted on gears A, C, and D are

$$T_A = \frac{P_A}{\omega} = \frac{6(10^3)}{20\pi} = 95.49\,\text{N}\cdot\text{m}$$

$$T_C = \frac{P_C}{\omega} = \frac{4(10^3)}{20\pi} = 63.66\,\text{N}\cdot\text{m}$$

$$T_D = \frac{P_D}{\omega} = \frac{5(10^3)}{20\pi} = 79.58\,\text{N}\cdot\text{m}$$

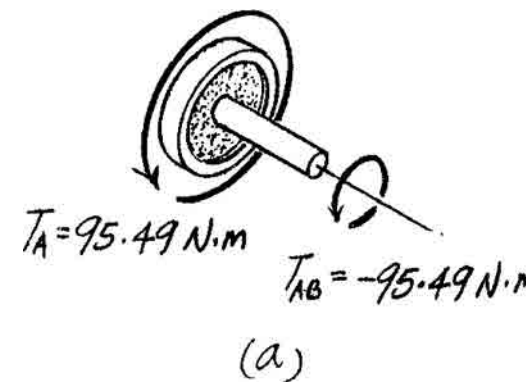

The internal torque developed in segments AB, CD, and BC of the shaft are shown in Figs. a, b, and c, respectively.

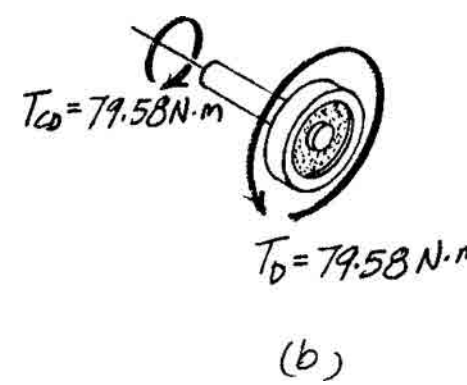

Allowable Shear Stress: Segment BC of the shaft is critical since it is subjected to a greater internal torque.

$$\tau_{\text{allow}} = \frac{T_{BC}\,c}{J}; \qquad 75(10^6) = \frac{143.24\left(\frac{d}{2}\right)}{\frac{\pi}{2}\left(\frac{d}{2}\right)^4}$$

$$d = 0.02135\text{ m} = 21.35\text{ mm}$$

Angle of Twist: By observation, the relative angle of twist of gear D with respect to gear B is the greatest.

Thus, the requirement is $\phi_{D/B} = 0.05$ rad.

$$\phi_{D/B} = \Sigma\frac{T_iL_i}{J_iG_i} = \frac{T_{BC}L_{BC}}{JG_{st}} + \frac{T_{CD}L_{CD}}{JG_{st}} = 0.05$$

$$\frac{0.6}{\frac{\pi}{2}\left(\frac{d}{2}\right)^4(75)(10^9)}(143.24 + 79.58) = 0.05$$

$$d = 0.02455\text{ m} = 24.55\text{ mm} = 25\text{ mm (controls!)}$$

Use $\quad d = 25$ mm **Ans.**

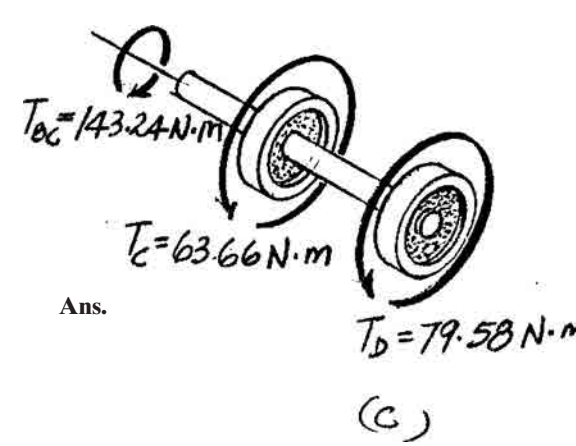

Ans:
Use $d = 25$ mm

***5–56.** The A-36 steel axle is made from tubes AB and CD and a solid section BC. It is supported on smooth bearings that allow it to rotate freely. If the gears, fixed to its ends, are subjected to 85-N · m torques, determine the angle of twist of the end B of the solid section relative to end C. The tubes have an outer diameter of 30 mm and an inner diameter of 20 mm. The solid section has a diameter of 40 mm.

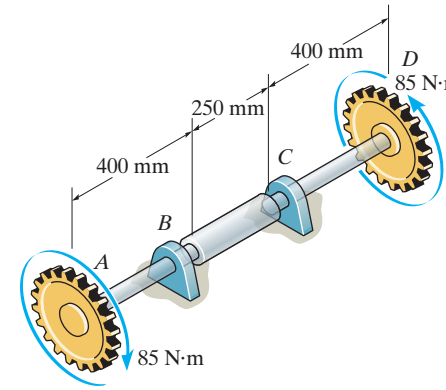

$$\phi_{B/C} = \frac{TL}{JG} = \frac{85(0.250)}{\frac{\pi}{2}(0.020)^4(75)(10^9)} = 0.00113 \text{ rad} = 0.0646^\circ$$ **Ans.**

5–57. The turbine develops 150 kW of power, which is transmitted to the gears such that C receives 70% and D receives 30%. If the rotation of the 100-mm-diameter A-36 steel shaft is $\omega = 800$ rev/min., determine the absolute maximum shear stress in the shaft and the angle of twist of end E of the shaft relative to B. The journal bearing at E allows the shaft to turn freely about its axis.

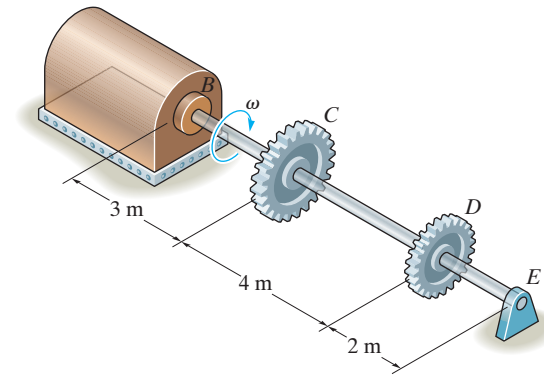

$$P = T\omega; \qquad 150(10^3)\text{ W} = T\left(800\frac{\text{rev}}{\text{min}}\right)\left(\frac{1\text{ min}}{60\text{ sec}}\right)\left(\frac{2\pi\text{ rad}}{1\text{ rev}}\right)$$

$$T = 1790.493\text{ N}\cdot\text{m}$$

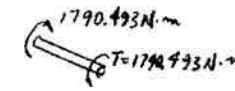

$$T_C = 1790.493(0.7) = 1253.345\text{ N}\cdot\text{m}$$

$$T_D = 1790.493(0.3) = 537.148\text{ N}\cdot\text{m}$$

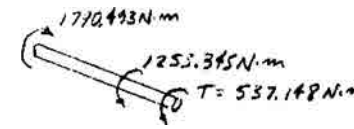

Maximum torque is in region BC.

$$\tau_{\max} = \frac{T_C}{J} = \frac{1790.493(0.05)}{\frac{\pi}{2}(0.05)^4} = 9.12\text{ MPa} \qquad \textbf{Ans.}$$

$$\phi_{E/B} = \Sigma\left(\frac{TL}{JG}\right) = \frac{1}{JG}[1790.493(3) + 537.148(4) + 0]$$

$$= \frac{7520.171}{\frac{\pi}{2}(0.05)^4(75)(10^9)} = 0.0102\text{ rad} = 0.585^\circ \qquad \textbf{Ans.}$$

Ans:
$\tau_{\max} = 9.12$ MPa, $\phi_{E/B} = 0.585^\circ$

5–58. The turbine develops 150 kW of power, which is transmitted to the gears such that both C and D receive an equal amount. If the rotation of the 100-mm-diameter A-36 steel shaft is $\omega = 500$ rev/min., determine the absolute maximum shear stress in the shaft and the rotation of end B of the shaft relative to E. The journal bearing at E allows the shaft to turn freely about its axis.

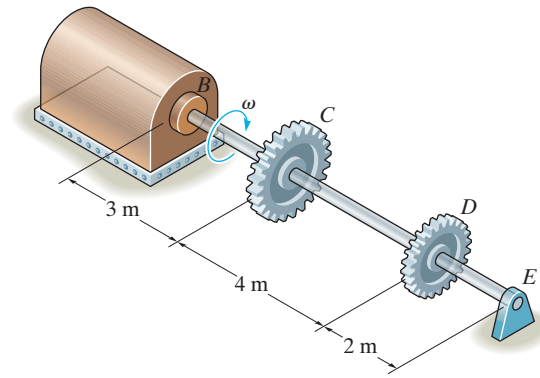

$$P = T\omega; \qquad 150(10^3)\text{ W} = T\left(500\frac{\text{rev}}{\text{min}}\right)\left(\frac{1\text{ min}}{60\text{ sec}}\right)\left(\frac{2\pi\text{ rad}}{1\text{ rev}}\right)$$

$$T = 2864.789\text{ N}\cdot\text{m}$$

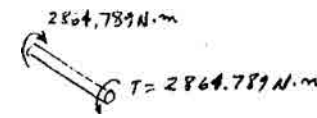

$$T_C = T_D = \frac{T}{2} = 1432.394\text{ N}\cdot\text{m}$$

Maximum torque is in region BC.

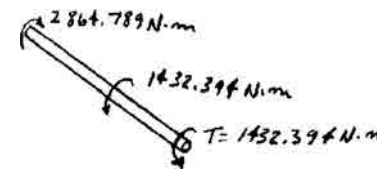

$$\tau_{\max} = \frac{T_C}{J} = \frac{2864.789(0.05)}{\frac{\pi}{2}(0.05)^4} = 14.6\text{ MPa}$$ **Ans.**

$$\phi_{B/E} = \Sigma\left(\frac{TL}{JG}\right) = \frac{1}{JG}[2864.789(3) + 1432.394(4) + 0]$$

$$= \frac{14323.945}{\frac{\pi}{2}(0.05)^4(75)(10^9)} = 0.0195\text{ rad} = 1.11^\circ$$ **Ans.**

Ans:

$\tau_{\max} = 14.6$ MPa, $\phi_{B/E} = 1.11^\circ$

5–59. The shaft is made of A992 steel. It has a diameter of 1 in. and is supported by bearings at A and D, which allow free rotation. Determine the angle of twist of B with respect to D.

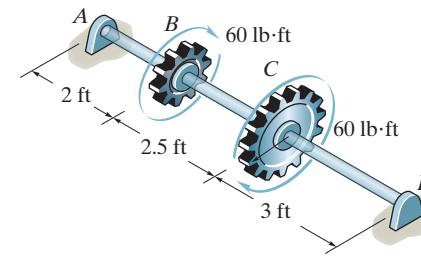

The internal torques developed in segments BC and CD are shown in Figs. a and b.

The polar moment of inertia of the shaft is $J = \frac{\pi}{2}(0.5^4) = 0.03125\pi \text{ in}^4$. Thus,

$$\phi_{B/D} = \sum \frac{T_i L_i}{J_i G_i} = \frac{T_{BC} L_{BC}}{J\, G_{st}} + \frac{T_{CD} L_{CD}}{J\, G_{st}}$$

$$= \frac{-60(12)(2.5)(12)}{(0.03125\pi)[11.0(10^6)]} + 0$$

$$= -0.02000 \text{ rad} = 1.15^\circ \qquad \textbf{Ans.}$$

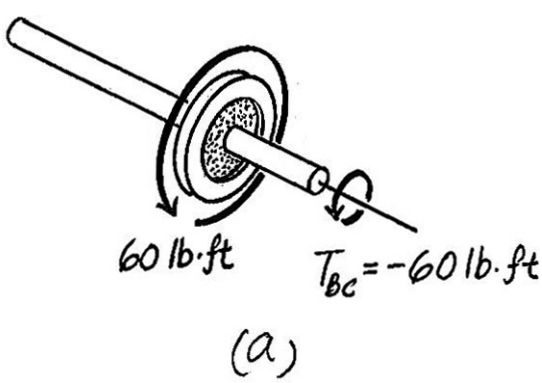

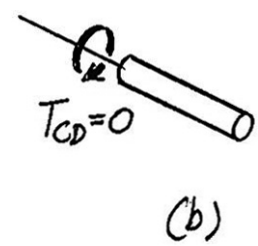

Ans:

$\phi_{B/D} = 1.15^\circ$

***5–60.** The shaft is made of A-36 steel. It has a diameter of 1 in. and is supported by bearings at A and D, which allow free rotation. Determine the angle of twist of gear C with respect to B.

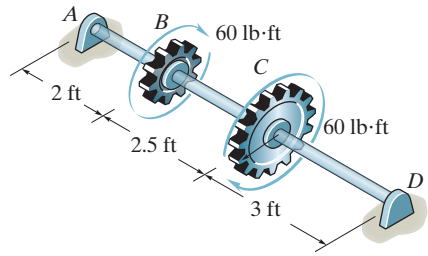

The internal torque developed in segment BC is shown in Fig. a

The polar moment of inertia of the shaft is $J = \frac{\pi}{2}(0.5^4) = 0.03125\pi \text{ in}^4$. Thus,

$$\phi_{C/B} = \frac{T_{BC}\,L_{BC}}{J\,G_{st}} = \frac{-60(12)(2.5)(12)}{(0.03125\pi)[11.0(10^6)]}$$

$$= -0.02000 \text{ rad}$$

$$= 1.15^\circ \qquad \textbf{Ans.}$$

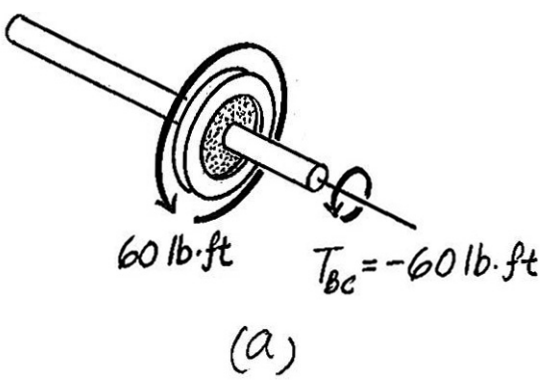

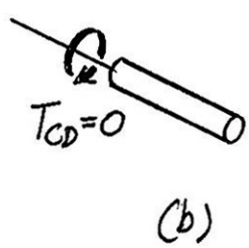

5–61. The two shafts are made of A992 steel. Each has a diameter of 1 in., and they are supported by bearings at A, B, and C, which allow free rotation. If the support at D is fixed, determine the angle of twist of end B when the torques are applied to the assembly as shown.

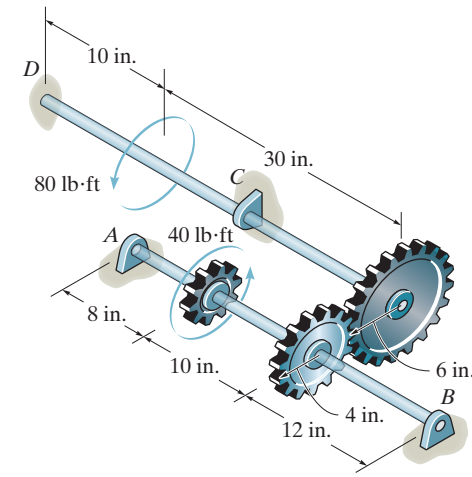

Internal Torque: As shown on FBD.

Angle of Twist:

$$\phi_E = \sum \frac{TL}{JG}$$

$$= \frac{1}{\frac{\pi}{2}(0.5^4)(11.0)(10^6)}[-60.0(12)(30) + 20.0(12)(10)]$$

$$= -0.01778 \text{ rad} = 0.01778 \text{ rad}$$

$$\phi_F = \frac{6}{4}\phi_E = \frac{6}{4}(0.01778) = 0.02667 \text{ rad}$$

Since there is no torque applied between F and B then

$$\phi_B = \phi_F = 0.02667 \text{ rad} = 1.53° \qquad \textbf{Ans.}$$

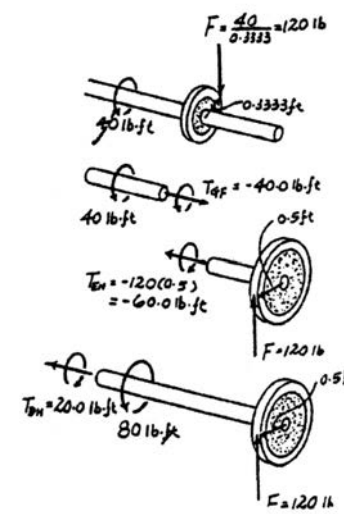

Ans:
$\phi_B = 1.53°$

5–62. The two shafts are made of A992 steel. Each has a diameter of 1 in., and they are supported by bearings at A, B, and C, which allow free rotation. If the support at D is fixed, determine the angle of twist of end A when the torques are applied to the assembly as shown.

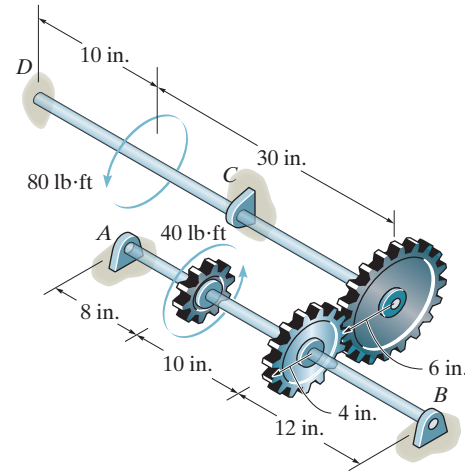

Internal Torque: As shown on FBD.

Angle of Twist:

$$\phi_E = \sum \frac{TL}{JG}$$

$$= \frac{1}{\frac{\pi}{2}(0.5^4)(11.0)(10^6)}[-60.0(12)(30) + 20.0(12)(10)]$$

$$= -0.01778 \text{ rad} = 0.01778 \text{ rad}$$

$$\phi_F = \frac{6}{4}\phi_E = \frac{6}{4}(0.01778) = 0.02667 \text{ rad}$$

$$\phi_{A/F} = \frac{T_{GF}\,L_{GF}}{JG}$$

$$= \frac{-40(12)(10)}{\frac{\pi}{2}(0.5^4)(11.0)(10^6)}$$

$$= -0.004445 \text{ rad} = 0.004445 \text{ rad}$$

$$\phi_A = \phi_F + \phi_{A/F}$$

$$= 0.02667 + 0.004445$$

$$= 0.03111 \text{ rad} = 1.78^\circ$$ **Ans.**

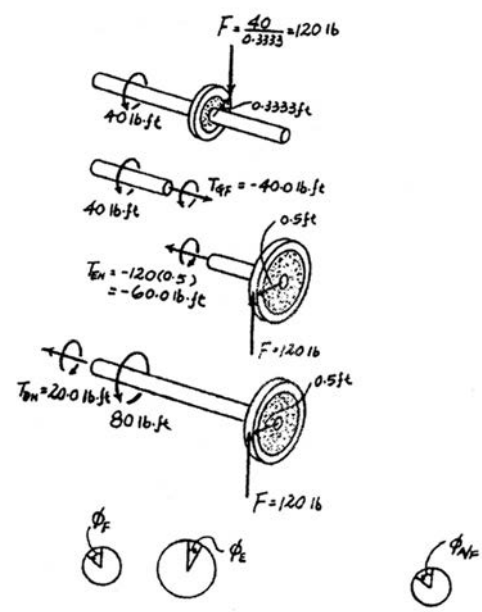

Ans:
$\phi_A = 1.78^\circ$

5–63. If the shaft is made of red brass C83400 copper with an allowable shear stress of $\tau_{\text{allow}} = 20$ MPa, determine the maximum allowable torques T_1 and T_2 that can be applied at A and B. Also, find the corresponding angle of twist of end A. Set $L = 0.75$ m.

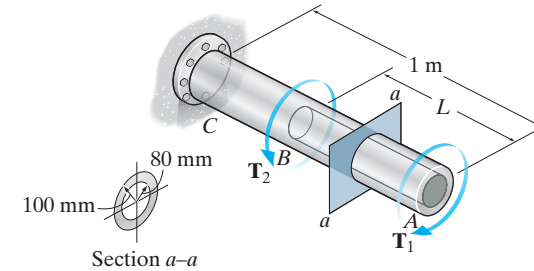

Internal Loading: The internal torques developed in segments AB and BC of the shaft are shown in Figs. a and b, respectively.

Allowable Shear Stress: The polar moments of inertia of segments AB and BC are $J_{AB} = \frac{\pi}{2}(0.1^4 - 0.08^4) = 29.52(10^{-6})\pi \text{ m}^4$ and $J_{BC} = \frac{\pi}{2}(0.1^4) = 50(10^{-6})\pi \text{ m}^4$. We will consider segment AB first.

$$\tau_{\text{allow}} = \frac{T_{AB}\, c_{AB}}{J_{AB}}; \qquad 20(10^6) = \frac{T_1(0.1)}{29.52(10^{-6})\pi}$$

$$T_1 = 18\,547.96 \text{ N}\cdot\text{m} = 18.5 \text{ kN}\cdot\text{m} \qquad \textbf{Ans.}$$

Using this result to consider segment BC, we have

$$\tau_{\text{allow}} = \frac{T_{BC}\, c_{BC}}{J_{BC}}; \qquad 20(10^6) = \frac{(T_2 - 18547.96)(0.1)}{50(10^{-6})\pi}$$

$$T_2 = 49963.89 \text{ N}\cdot\text{m} = 50.0 \text{ kN}\cdot\text{m} \qquad \textbf{Ans.}$$

Angle of Twist: Using the results of $\mathbf{T}_1$ and $\mathbf{T}_2$,

$$\phi_{A/C} = \Sigma \frac{T_i L_i}{J_i G_i} = \frac{T_{AB} L_{AB}}{J_{AB} G_{st}} + \frac{T_{BC} L_{BC}}{J_{BC} G_{st}}$$

$$\phi_{A/C} = \frac{-18547.96(0.75)}{29.52(10^{-6})\pi(37)(10^9)} + \frac{(49963.89 - 18547.96)(0.25)}{50(10^{-6})\pi(37)(10^9)}$$

$$= -0.002703 \text{ rad} = 0.155^\circ \qquad \textbf{Ans.}$$

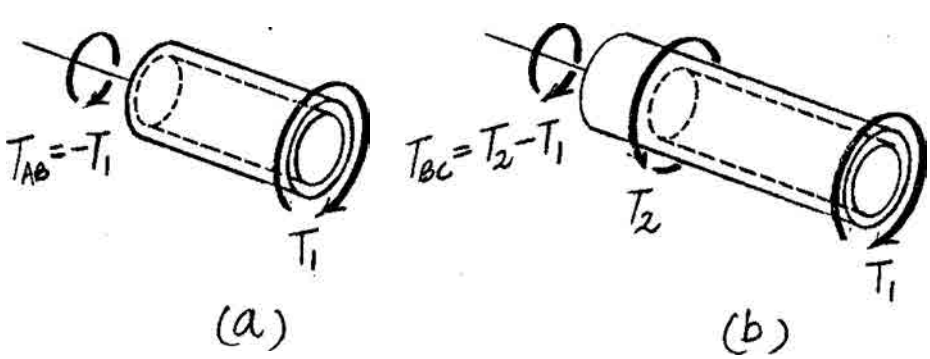

Ans:
$T_1 = 18.5 \text{ kN}\cdot\text{m}$, $T_2 = 50.0 \text{ kN}\cdot\text{m}$,
$\phi_{A/C} = 0.155^\circ$

***5–64.** If the shaft is made of red brass C83400 copper and is subjected to torques $T_1 = 20\ \text{kN}\cdot\text{m}$ and $T_2 = 50\ \text{kN}\cdot\text{m}$, determine the distance L so that the angle of twist at end A is zero.

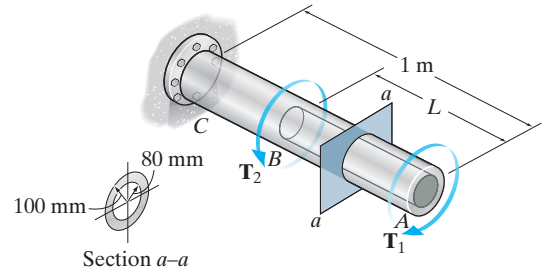

Internal Loading: The internal torques developed in segments AB and BC of the shaft are shown in Figs. a and b, respectively.

Angle of Twist: The polar moments of inertia of segments AB and BC are $J_{AB} = \frac{\pi}{2}(0.1^4 - 0.08^4) = 29.52(10^{-6})\pi\ \text{m}^4$ and $J_{BC} = \frac{\pi}{2}(0.1^4) = 50(10^{-6})\pi\ \text{m}^4$.

Here, it is required that. $\Phi_{A/C} = 0$

$$\phi_{A/C} = \Sigma\frac{T_iL_i}{J_iG_i} = \frac{T_{AB}L_{AB}}{J_{AB}G_{st}} + \frac{T_{BC}L_{BC}}{J_{BC}G_{st}}$$

$$0 = \frac{-20(10^3)(L)}{29.52(10^{-6})\pi(37)(10^9)} + \frac{30(10^3)(1 - L)}{50(10^{-6})\pi(37)(10^9)}$$

$$L = 0.4697\ \text{m} = 470\ \text{mm}$$ **Ans.**

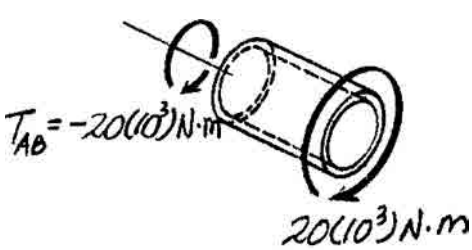

(a)

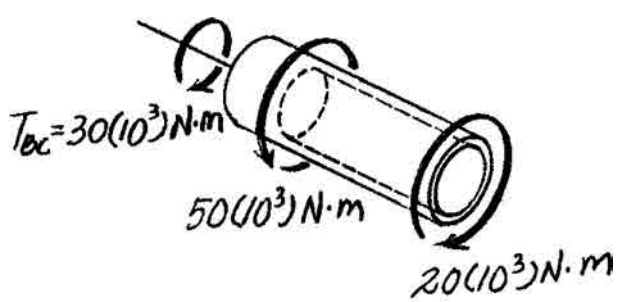

(b)

5–65. The 8-mm-diameter A-36 steel bolt is screwed tightly into a block at A. Determine the couple forces F that should be applied to the wrench so that the maximum shear stress in the bolt becomes 18 MPa. Also, compute the corresponding displacement of each force F needed to cause this stress. Assume that the wrench is rigid.

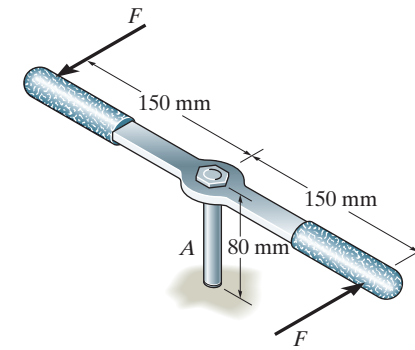

$$T - F(0.3) = 0 \qquad (1)$$

$$\tau_{\max} = \frac{Tc}{J}; \qquad 18(10^6) = \frac{T(0.004)}{\frac{\pi}{2}(0.004^4)}$$

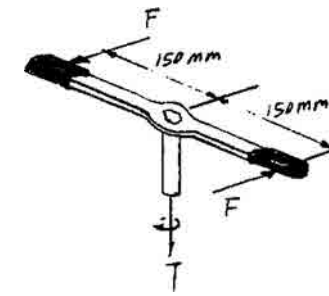

$$T = 1.8096 \text{ N} \cdot \text{m}$$

From Eq. (1),

$$F = 6.03 \text{ N} \qquad \textbf{Ans.}$$

$$\phi = \frac{TL}{JG} = \frac{1.8096(0.08)}{\frac{\pi}{2}[(0.0040)^4]75(10^9)} = 0.00480 \text{ rad}$$

$$s = r\phi = 0.15(0.00480) = 0.00072 \text{ m} = 0.720 \text{ mm} \qquad \textbf{Ans.}$$

Ans:
$F = 6.03$ N, $s = 0.720$ mm

5–66. The A-36 hollow steel shaft is 2 m long and has an outer diameter of 40 mm. When it is rotating at 80 rad/s, it transmits 32 kW of power from the engine E to the generator G. Determine the smallest thickness of the shaft if the allowable shear stress is $\tau_{\text{allow}} = 140$ MPa and the shaft is restricted not to twist more than 0.05 rad.

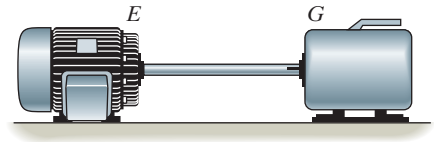

$$P = T\omega$$

$$32(10^3) = T(80)$$

$$T = 400 \text{ N} \cdot \text{m}$$

Shear stress failure

$$\tau = \frac{Tc}{J}$$

$$\tau_{\text{allow}} = 140(10^6) = \frac{400(0.02)}{\frac{\pi}{2}(0.02^4 - r_i^4)}$$

$$r_i = 0.01875 \text{ m}$$

Angle of twist limitation:

$$\phi = \frac{TL}{JG}$$

$$0.05 = \frac{400(2)}{\frac{\pi}{2}(0.02^4 - r_i^4)(75)(10^9)}$$

$$r_i = 0.01247 \text{ m} \qquad \text{(controls)}$$

$$t = r_o - r_i = 0.02 - 0.01247$$

$$= 0.00753 \text{ m}$$

$$= 7.53 \text{ mm}$$ **Ans.**

Ans:
$t = 7.53$ mm

5–67. The A-36 solid steel shaft is 3 m long and has a diameter of 50 mm. It is required to transmit 35 kW of power from the engine E to the generator G. Determine the smallest angular velocity the shaft can have if it is restricted not to twist more than 1°.

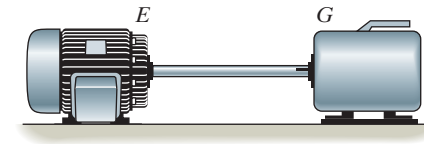

$$\phi = \frac{TL}{JG}$$

$$\frac{1^\circ(\pi)}{180^\circ} = \frac{T(3)}{\frac{\pi}{2}(0.025^4)(75)(10^9)}$$

$$T = 267.73\ \text{N}\cdot\text{m}$$

$$P = T\omega$$

$$35(10^3) = 267.73(\omega)$$

$$\omega = 131\ \text{rad/s}$$ **Ans.**

Ans:
$\omega = 131$ rad/s

***5–68.** If the shaft is subjected to a uniform distributed torque t_0, determine the angle of twist at A. The material has a shear modulus G. The shaft is hollow for exactly half its length.

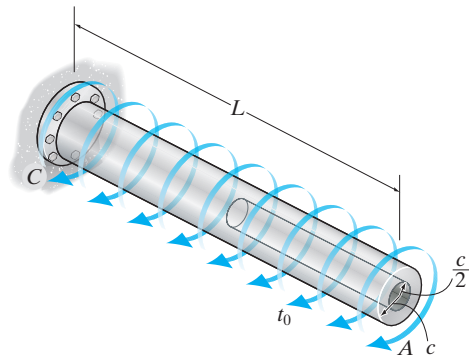

Internal Loading: The internal torques developed in the hollow and solid segments of the shaft are shown in Figs. *a* and *b*, respectively.

Angle of Twist: The polar moments of inertia of the hollow and solid segments of the shaft are $J_h = \frac{\pi}{2}\left[c^4 - \left(\frac{c}{2}\right)^4\right] = \frac{15\pi}{32}c^4$ and $J_s = \frac{\pi}{2}c^4$, respectively. We have

$$\phi_A = \Sigma \int \frac{T(x)\,dx}{JG}$$

$$= -\int_0^{L/2} \frac{tx_1 dx_1}{\left(\frac{15\pi}{32}c^4\right)G} - \int_0^{L/2} \frac{\left(tx_2 + \frac{1}{2}tL\right)dx_2}{\left(\frac{\pi}{2}c^4\right)G}$$

$$= -\left[\frac{32}{15\pi c^4 G}\int_0^{L/2} tx_1 dx_1 + \frac{2}{\pi c^4 G}\int_0^{L/2}\left(tx_2 + \frac{1}{2}tL\right)dx_2\right]$$

$$= -\left[\frac{32}{15\pi c^4 G}\left(\frac{tx_1^2}{2}\right)\Bigg|_0^{L/2} + \frac{2}{\pi c^4 G}\left(\frac{tx_2^2}{2} + \frac{1}{2}tLx_2\right)\Bigg|_0^{L/2}\right]$$

$$= -\frac{61tL^2}{60\pi c^4 G} = \frac{61tL^2}{60\pi c^4 G}$$ **Ans.**

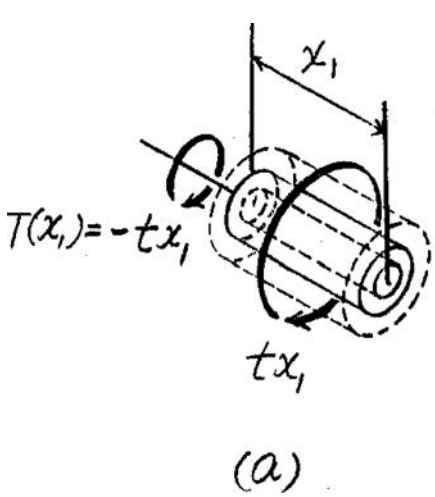

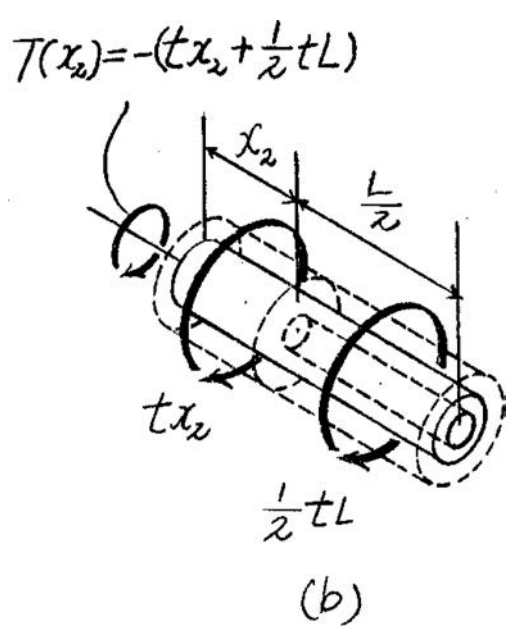

5–69. The A-36 steel bolt is tightened within a hole so that the reactive torque on the shank AB can be expressed by the equation $t = (kx^2)\ \mathrm{N \cdot m/m}$, where x is in meters. If a torque of $T = 50\ \mathrm{N \cdot m}$ is applied to the bolt head, determine the constant k and the amount of twist in the 50-mm length of the shank. Assume the shank has a constant radius of 4 mm.

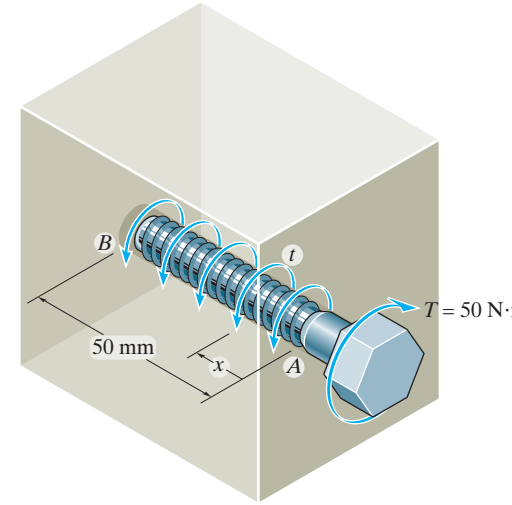

$$dT = t\,dx$$

$$T = \int_0^{0.05\ \mathrm{m}} kx^2 dx = k\frac{x^3}{3}\Big|_0^{0.05} = 41.667(10^{-6})k$$

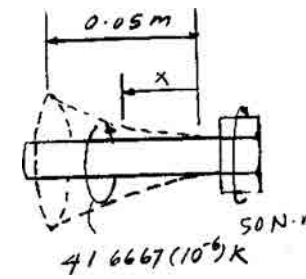

$$50 - 41.6667(10^{-6})\,k = 0$$

$$k = 1.20(10^6)\ \mathrm{N/m^2}$$ **Ans.**

In the general position, $T = \int_0^x 1.20(10^6)x^2 dx = 0.4(10^6)x^3$

$$\phi = \int \frac{T(x)dx}{JG} = \frac{1}{JG}\int_0^{0.05\ \mathrm{m}} [50 - 0.4(10^6)x^3]dx$$

$$= \frac{1}{JG}\left[50x - \frac{0.4(10^6)x^4}{4}\right]\Bigg|_0^{0.05\ \mathrm{m}}$$

$$= \frac{1.875}{JG} = \frac{1.875}{\frac{\pi}{2}(0.004^4)(75)(10^9)}$$

$$= 0.06217\ \mathrm{rad} = 3.56^\circ$$ **Ans.**

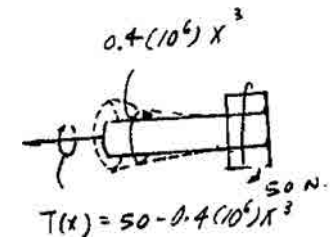

Ans:
$k = 1.20\ (10^6)\ \mathrm{N/m^2}$, $\phi = 3.56^\circ$

5–70. Solve Prob. 5–69 if the distributed torque is $t = (kx^{2/3})\ \mathrm{N \cdot m/m}$.

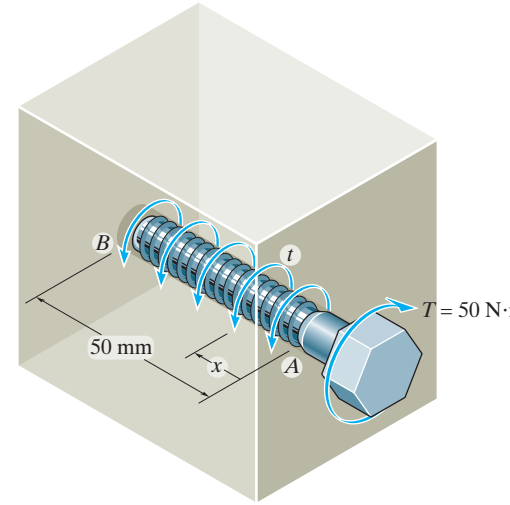

$$dT = t\,dx$$

$$T = \int_0^{0.05} kx^{\frac{2}{3}}\,dx = k\frac{3}{5}x^{\frac{5}{3}}\Big|_0^{0.05} = (4.0716)(10^{-3})\,k$$

$$50 - 4.0716(10^{-3})\,k = 0$$

$$k = 12.28(10^3)\ \mathrm{N/m^{(\frac{2}{3})}}$$ **Ans.**

In the general position,

$$T = \int_0^x 12.28(10^3)x^{\frac{2}{3}}\,dx = 7.368(10^3)\,x^{\frac{5}{3}}$$

Angle of twist:

$$\phi = \int \frac{T(x)\,dx}{JG} = \frac{1}{JG}\int_0^{0.05\ \mathrm{m}} [50 - 7.3681(10^3)x^{\frac{8}{3}}]dx$$

$$= \frac{1}{JG}\left[50x - 7.3681(10^3)\left(\frac{3}{8}\right)x^{\frac{8}{3}}\right]\Big|_0^{0.05\ \mathrm{m}}$$

$$= \frac{1.5625}{\frac{\pi}{2}(0.004^4)(75)(10^9)} = 0.0518\ \mathrm{rad} = 2.97^\circ$$ **Ans.**

Ans:
$k = 12.28(10^3)\ \mathrm{N/m^{2/3}}$, $\phi = 2.97^\circ$

***5–72.** The 80-mm-diameter shaft is made of 6061-T6 aluminum alloy and subjected to the torsional loading shown. Determine the angle of twist at end A.

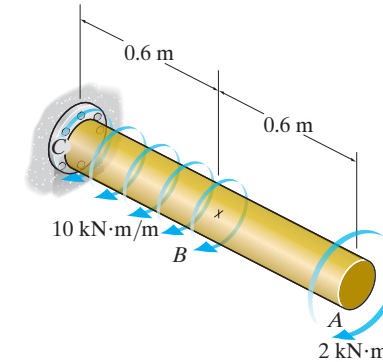

Equilibrium: Referring to the free-body diagram of segment AB shown in Fig. a,

$$\Sigma M_x = 0; \quad -T_{AB} - 2(10^3) = 0 \qquad\qquad T_{AB} = -2(10^3)\,\text{N}\cdot\text{m}$$

And the free-body diagram of segment BC, Fig. b,

$$\Sigma M_x = 0; \quad -T_{BC} - 10(10^3)x - 2(10^3) = 0 \qquad\qquad T_{BC} = -\left[10(10^3)x + 2(10^3)\right]\text{N}\cdot\text{m}$$

Angle of Twist: The polar moment of inertia of the shaft is $J = \frac{\pi}{2}\left(0.04^4\right) = 1.28(10^{-6})\pi\ \text{m}^4$. We have

$$\phi_A = \Sigma\frac{T_i L_i}{J_i G_i} = \frac{T_{AB}L_{AB}}{JG_{al}} + \int_0^{L_{BC}} \frac{T_{BC}\,dx}{JG_{al}}$$

$$= \frac{-2(10^3)(0.6)}{1.28(10^{-6})\pi(26)(10^9)} + \int_0^{0.6\text{ m}} \frac{-\left[10(10^3)x + 2(10^3)\right]dx}{1.28(10^{-6})\pi(26)(10^9)}$$

$$= -\frac{1}{1.28(10^{-6})\pi(26)(10^9)}\left\{1200 + \left[5(10^3)x^2 + 2(10^3)x\right]\Big|_0^{0.6\text{m}}\right\}$$

$$= -0.04017\text{ rad} = 2.30^\circ \qquad \textbf{Ans.}$$

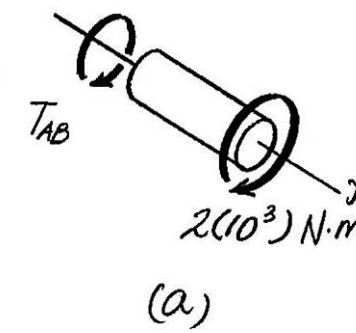

(a)

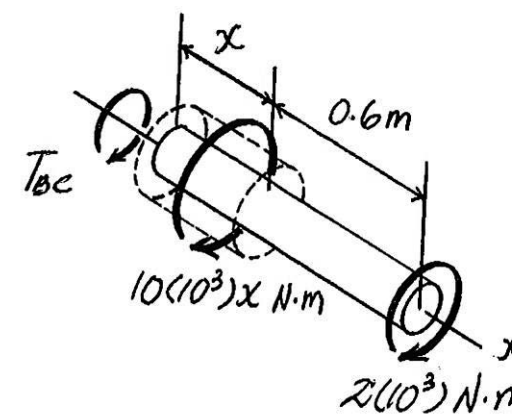

(b)

5–73. The contour of the surface of the shaft is defined by the equation $y = e^{ax}$, where a is a constant. If the shaft is subjected to a torque T at its ends, determine the angle of twist of end A with respect to end B. The shear modulus is G.

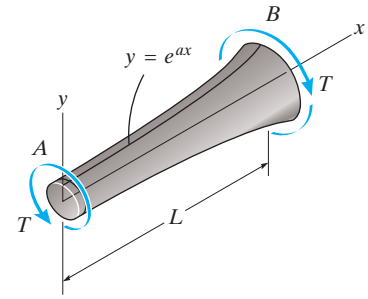

$$\phi = \int \frac{T\,dx}{J(x)G} \qquad \text{where, } J(x) = \frac{\pi}{2}(e^{ax})^4$$

$$= \frac{2T}{\pi G}\int_0^L \frac{dx}{e^{4ax}} = \frac{2T}{\pi G}\left(-\frac{1}{4\,a\,e^{4ax}}\right)\Bigg|_0^L$$

$$= \frac{2T}{\pi G}\left(-\frac{1}{4\,a\,e^{4aL}} + \frac{1}{4a}\right) = \frac{T}{2\,a\,\pi\,G}\left(\frac{e^{4aL}-1}{e^{4aL}}\right)$$

$$= \frac{T}{2\,a\,\pi\,G}(1 - e^{-4aL})$$ **Ans.**

Ans:

$$\phi = \frac{T}{2a\pi G}(1 - e^{-4aL})$$

5–74. The rod ABC of radius c is embedded into a medium where the distributed torque reaction varies linearly from zero at C to t_0 at B. If couple forces P are applied to the lever arm, determine the value of t_0 for equilibrium. Also, find the angle of twist of end A. The rod is made from material having a shear modulus of G.

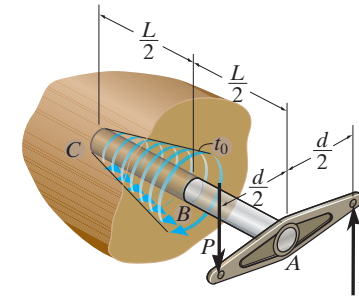

Equilibrium: Referring to the free-body diagram of the entire rod shown in Fig. *a*,

$$\Sigma M_x = 0; \quad Pd - \frac{1}{2}(t_0)\left(\frac{L}{2}\right) = 0$$

$$t_0 = \frac{4Pd}{L} \qquad \textbf{Ans.}$$

Internal Loading: The distributed torque expressed as a function of x, measured from the left end, is $t = \left(\frac{t_0}{L/2}\right)x = \left(\frac{4Pd/L}{L/2}\right)x = \left(\frac{8Pd}{L^2}\right)x$. Thus, the resultant torque within region x of the shaft is

$$T_R = \frac{1}{2}tx = \frac{1}{2}\left[\left(\frac{8Pd}{L^2}\right)x\right]x = \frac{4Pd}{L^2}x^2$$

Referring to the free-body diagram shown in Fig. *b*,

$$\Sigma M_x = 0; \quad T_{BC} - \frac{4Pd}{L^2}x^2 = 0 \qquad\qquad T_{BC} = \frac{4Pd}{L^2}x^2$$

Referring to the free-body diagram shown in Fig. *c*,

$$\Sigma M_x = 0; \quad Pd - T_{AB} = 0 \qquad\qquad T_{AB} = Pd$$

5–74. Continued

Angle of Twist:

$$\phi = \Sigma \frac{T_i L_i}{J_i G_i} = \int_0^{L_{BC}} \frac{T_{BC}\, dx}{JG} + \frac{T_{AB}\, L_{AB}}{JG}$$

$$= \int_0^{L/2} \frac{\frac{4Pd}{L^2} x^2 dx}{\left(\frac{\pi}{2} c^4\right) G} + \frac{Pd(L/2)}{\left(\frac{\pi}{2} c^4\right) G}$$

$$= \frac{8Pd}{\pi c^4 L^2 G} \left(\frac{x^3}{3}\right)\Bigg|_0^{L/2} + \frac{PLd}{\pi c^4 G}$$

$$= \frac{4PLd}{3\pi c^4 G}$$ **Ans.**

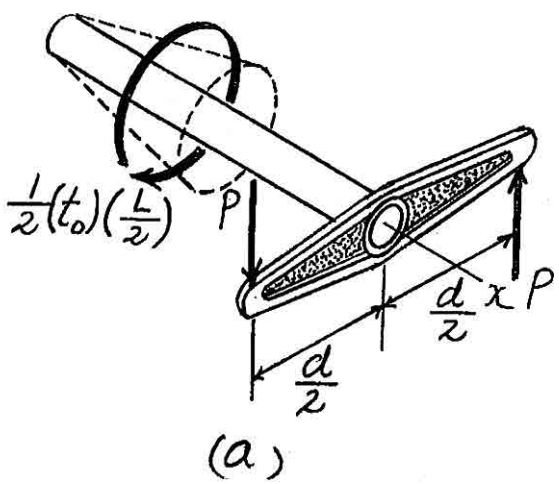

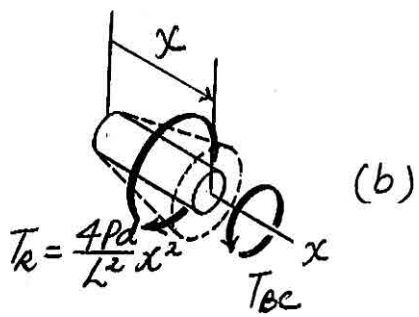

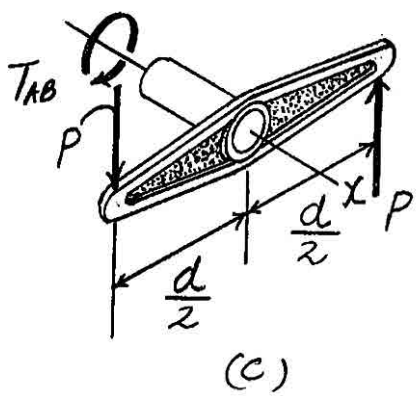

Ans:

$t_0 = \frac{4Pd}{L}, \phi = \frac{4PLd}{3\pi c^4 G}$

5–75. The A992 steel posts are "drilled" at constant angular speed into the soil using the rotary installer. If the post has an inner diameter of 200 mm and an outer diameter of 225 mm, determine the relative angle of twist of end A of the post with respect to end B when the post reaches the depth indicated. Due to soil friction, assume the torque along the post varies linearly as shown, and a concentrated torque of 80 kN · m acts at the bit.

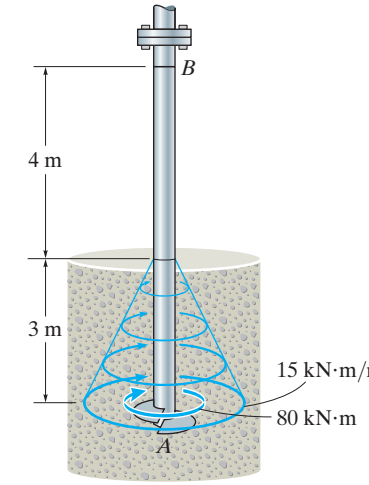

$$\Sigma M_z = 0; \qquad T_B - 80 - \frac{1}{2}(15)(3) = 0$$

$$T_B = 102.5 \text{ kN} \cdot \text{m}$$

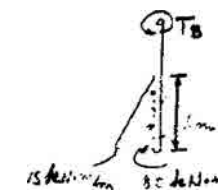

$$\Sigma M_z = 0; \qquad 102.5 - \frac{1}{2}(5z)(z) - T = 0$$

$$T = (102.5 - 2.5z^2) \text{ kN} \cdot \text{m}$$

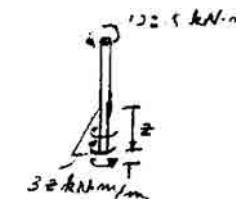

$$\phi_{A/B} = \frac{TL}{JG} + \int \frac{T\,dz}{JG}$$

$$= \frac{102.5(10^3)(4)}{\frac{\pi}{2}((0.1125)^4 - (0.1)^4)(75)(10^9)} + \int_0^3 \frac{(102.5 - 2.5z^2)(10^3)dz}{\frac{\pi}{2}((0.1125)^4 - (0.1)^4)(75)(10^9)}$$

$$= 0.0980 \text{ rad} = 5.62^\circ \qquad \textbf{Ans.}$$

Ans:
$\phi_{A/B} = 5.62^\circ$

***5–76.** A cylindrical spring consists of a rubber annulus bonded to a rigid ring and shaft. If the ring is held fixed and a torque T is applied to the rigid shaft, determine the angle of twist of the shaft. The shear modulus of the rubber is G. *Hint:* As shown in the figure, the deformation of the element at radius r can be determined from $r d\theta = dr\gamma$. Use this expression along with $\tau = T/(2\pi r^2 h)$ from Prob. 5–26, to obtain the result.

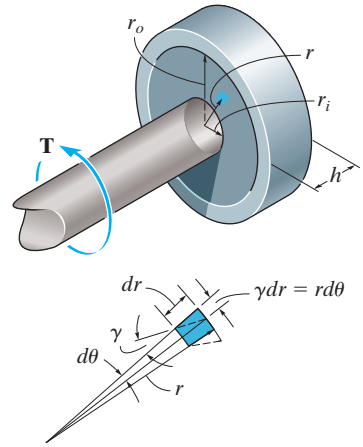

$$r\, d\theta = \gamma\, dr$$

$$d\theta = \frac{\gamma dr}{r} \qquad (1)$$

From Prob. 5-26,

$$\tau = \frac{T}{2\pi\, r^2 h} \qquad \text{and} \qquad \gamma = \frac{\tau}{G}$$

$$\gamma = \frac{T}{2\pi\, r^2 hG}$$

From (1),

$$d\theta = \frac{T}{2\pi\, hG}\frac{dr}{r^3}$$

$$\theta = \frac{T}{2\pi\, hG}\int_{r_i}^{r_o}\frac{dr}{r^3} = \frac{T}{2\pi\, hG}\left[-\frac{1}{2\, r^2}\right]\Bigg|_{r_i}^{r_o}$$

$$= \frac{T}{2\pi\, hG}\left[-\frac{1}{2r_o^2} + \frac{1}{2r_i^2}\right]$$

$$= \frac{T}{4\pi\, hG}\left[\frac{1}{r_i^2} - \frac{1}{r_o^2}\right] \qquad \textbf{Ans.}$$

5–77. The steel shaft has a diameter of 40 mm and is fixed at its ends A and B. If it is subjected to the couple determine the maximum shear stress in regions AC and CB of the shaft. $G_{st} = 75$ Gpa.

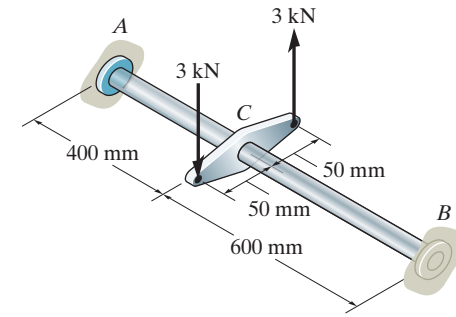

Equilibrium:

$$T_A + T_B - 3000(0.1) = 0 \qquad (1)$$

Compatibility condition:

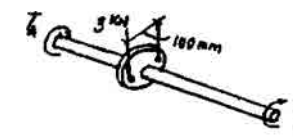

$$\phi_{C/A} = \phi_{C/B}$$

$$\frac{T_A(400)}{JG} = \frac{T_B(600)}{JG}$$

$$T_A = 1.5\,T_B \qquad (2)$$

Solving Eqs (1) and (2) yields:

$$T_B = 120\ \text{N}\cdot\text{m}$$

$$T_A = 180\ \text{N}\cdot\text{m}$$

$$(\tau_{AC})_{max} = \frac{Tc}{J} = \frac{180(0.02)}{\frac{\pi}{2}(0.02^4)} = 14.3\ \text{MPa} \qquad \textbf{Ans.}$$

$$(\tau_{CB})_{max} = \frac{Tc}{J} = \frac{120(0.02)}{\frac{\pi}{2}(0.02^4)} = 9.55\ \text{MPa} \qquad \textbf{Ans.}$$

Ans:

$(\tau_{AC})_{max} = 14.3$ MPa, $(\tau_{CB})_{max} = 9.55$ MPa

5–78. The A992 steel shaft has a diameter of 60 mm and is fixed at its ends A and B. If it is subjected to the torques shown, determine the absolute maximum shear stress in the shaft.

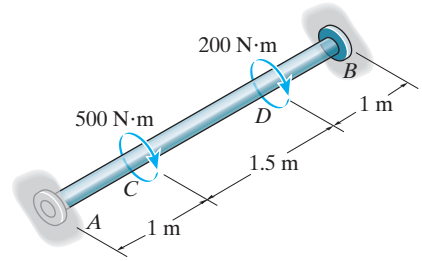

Referring to the FBD of the shaft shown in Fig. a,

$$\Sigma M_x = 0; \qquad T_A + T_B - 500 - 200 = 0 \qquad \textbf{(1)}$$

Using the method of superposition, Fig. b

$$\phi_A = (\phi_A)_{T_A} - (\phi_A)_T$$

$$0 = \frac{T_A(3.5)}{JG} - \left[\frac{500\,(1.5)}{JG} + \frac{700\,(1)}{JG}\right]$$

$$T_A = 414.29 \text{ N}\cdot\text{m}$$

Substitute this result into Eq (1),

$$T_B = 285.71 \text{ N}\cdot\text{m}$$

Referring to the torque diagram shown in Fig. c, segment AC is subjected to maximum internal torque. Thus, the absolute maximum shear stress occurs here.

$$\tau_{\substack{\text{abs}\\\text{max}}} = \frac{T_{AC}\,c}{J} = \frac{414.29\,(0.03)}{\frac{\pi}{2}(0.03)^4} = 9.77 \text{ MPa} \qquad \textbf{Ans.}$$

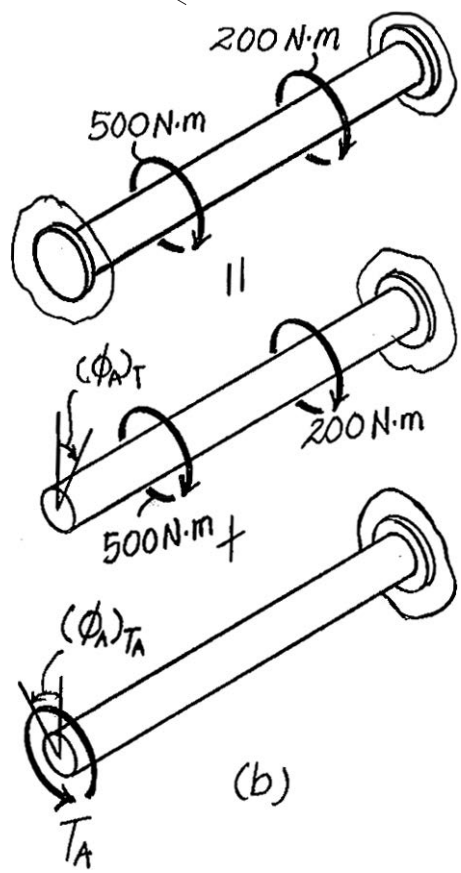

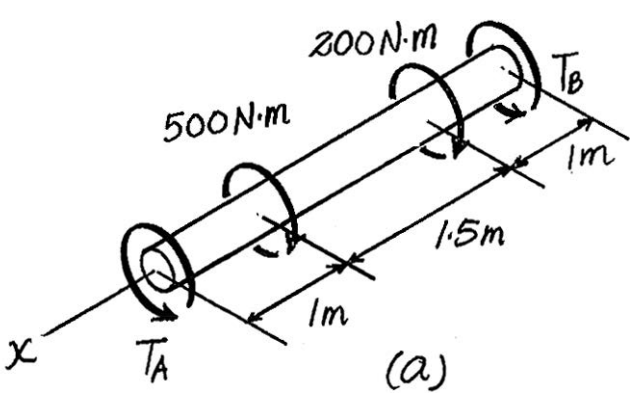

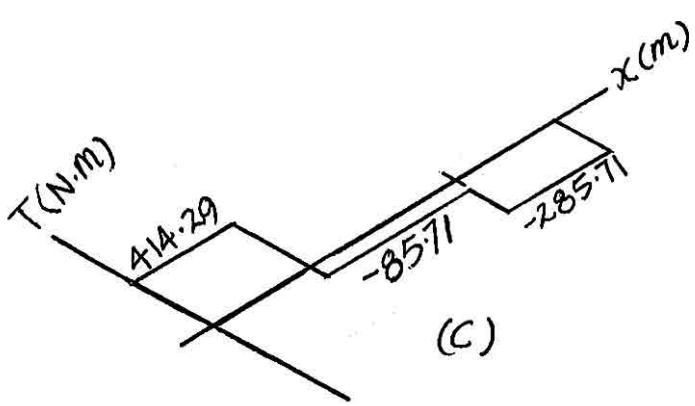

Ans:
$\tau_{\substack{\text{abs}\\\text{max}}} = 9.77$ MPa

5–79. The steel shaft is made from two segments: AC has a diameter of 0.5 in., and CB has a diameter of 1 in. If the shaft is fixed at its ends A and B and subjected to a torque of 500 lb · ft, determine the maximum shear stress in the shaft. $G_{st} = 10.8(10^3)$ ksi.

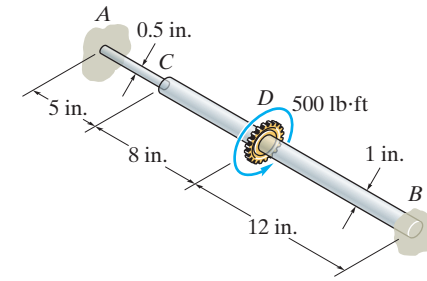

Equilibrium:

$$T_A + T_B - 500 = 0 \qquad (1)$$

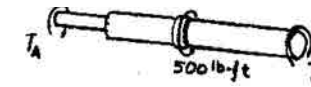

Compatibility condition:

$$\phi_{D/A} = \phi_{D/B}$$

$$\frac{T_A(5)}{\frac{\pi}{2}(0.25^4)G} + \frac{T_A(8)}{\frac{\pi}{2}(0.5^4)G} = \frac{T_B(12)}{\frac{\pi}{2}(0.5^4)G}$$

$$1408\,T_A = 192\,T_B \qquad (2)$$

Solving Eqs. (1) and (2) yields

$$T_A = 60 \text{ lb} \cdot \text{ft} \qquad T_B = 440 \text{ lb} \cdot \text{ft}$$

$$\tau_{AC} = \frac{Tc}{J} = \frac{60(12)(0.25)}{\frac{\pi}{2}(0.25^4)} = 29.3 \text{ ksi} \qquad \text{(max)} \qquad \textbf{Ans.}$$

$$\tau_{DB} = \frac{Tc}{J} = \frac{440(12)(0.5)}{\frac{\pi}{2}(0.5^4)} = 26.9 \text{ ksi}$$

Ans:

$\tau_{max} = 29.3$ ksi

***5–80.** The shaft is made of A-36 steel and is fixed at its ends A and D. Determine the torsional reactions at these supports.

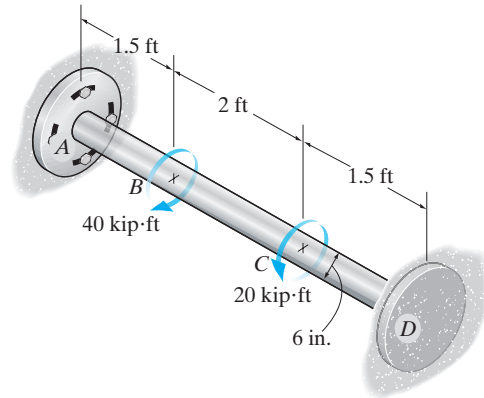

Equilibrium: Referring to the free-body diagram of the shaft shown in Fig. *a*,

$$\Sigma M_x = 0; \quad T_A + T_D + 20 - 40 = 0 \qquad (1)$$

Compatibility Equation: Using the method of superposition, Fig. *b*,

$$\phi_A = (\phi_A)_T - (\phi_A)_{T_A}$$

$$0 = \left[\frac{40(12)(2)(12)}{JG} + \frac{20(12)(1.5)(12)}{JG}\right] - \frac{T_A(12)(5)(12)}{JG}$$

$$T_A = 22 \text{ kip} \cdot \text{ft} \qquad \textbf{Ans.}$$

Substituting this result into Eq. (1),

$$T_D = -2 \text{ kip} \cdot \text{ft} = 2 \text{ kip} \cdot \text{ft} \qquad \textbf{Ans.}$$

The negative sign indicates that T_D acts in the sense opposite to that shown on the free-body diagram.

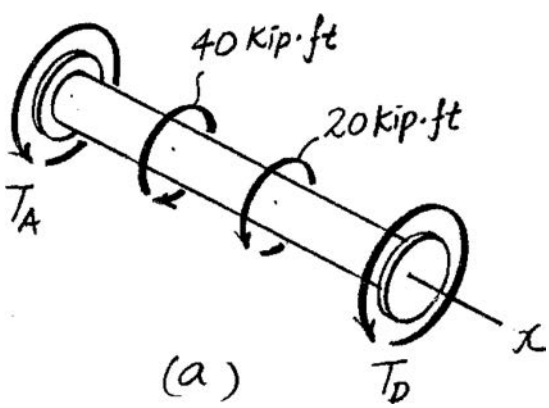

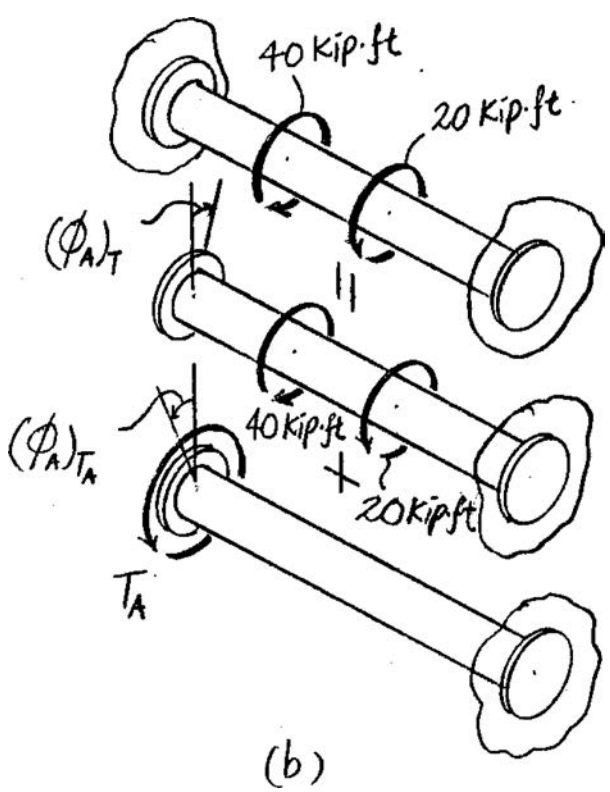

5–81. The shaft is made of A-36 steel and is fixed at end D, while end A is allowed to rotate 0.005 rad when the torque is applied. Determine the torsional reactions at these supports.

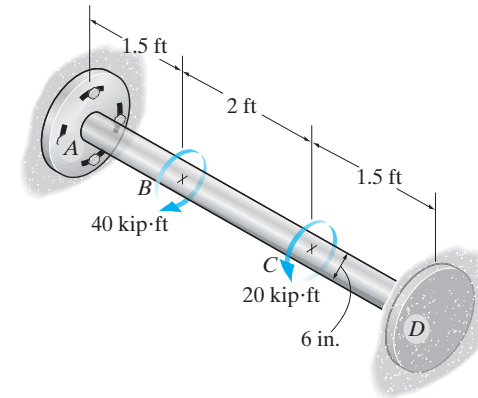

Equilibrium: Referring to the free-body diagram of the shaft shown in Fig. *a*,

$$\Sigma M_x = 0; \quad T_A + T_D + 20 - 40 = 0 \qquad (1)$$

Compatibility Equation: Using the method of superposition, Fig. *b*,

$$\phi_A = (\phi_A)_T - (\phi_A)_{T_A}$$

$$0.005 = \left[\frac{40(12)(2)(12)}{\frac{\pi}{2}(3^4)(11.0)(10^3)} + \frac{20(12)(1.5)(12)}{\frac{\pi}{2}(3^4)(11.0)(10^3)}\right] - \frac{T_A(12)(5)(12)}{\frac{\pi}{2}(3^4)(11.0)(10^3)}$$

$$T_A = 12.28 \text{ kip}\cdot\text{ft} = 12.3 \text{ kip}\cdot\text{ft} \qquad \textbf{Ans.}$$

Substituting this result into Eq. (1),

$$T_D = 7.719 \text{ kip}\cdot\text{ft} = 7.72 \text{ kip}\cdot\text{ft} \qquad \textbf{Ans.}$$

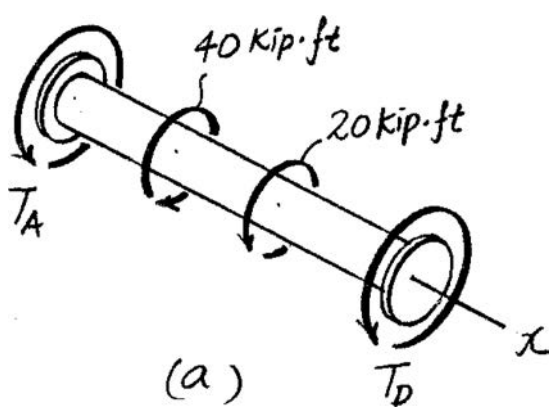

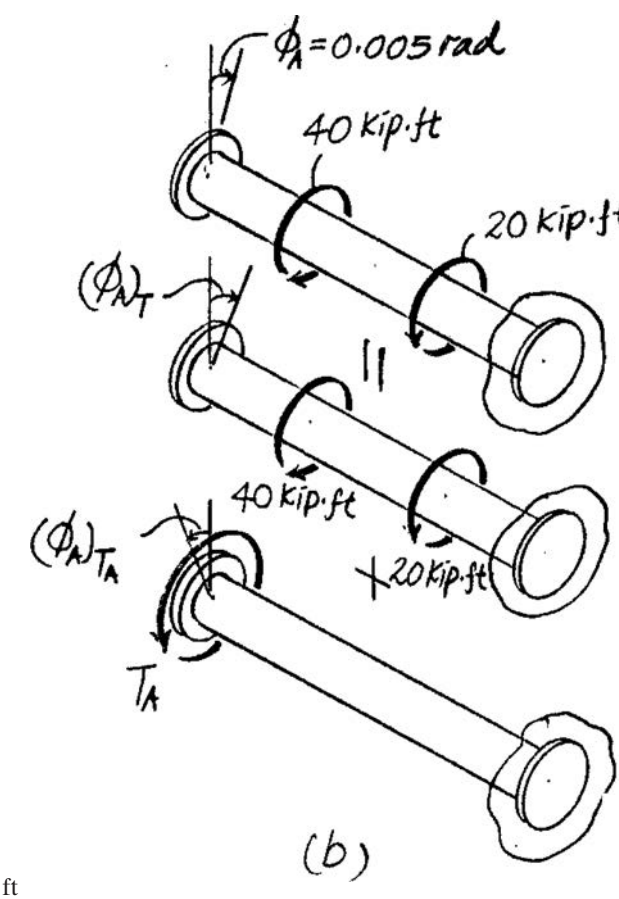

Ans:

$T_A = 12.3$ kip · ft, $T_D = 7.72$ kip · ft

5–82. The shaft is made from a solid steel section AB and a tubular portion made of steel and having a brass core. If it is fixed to a rigid support at A, and a torque of $T = 50\ \text{lb}\cdot\text{ft}$ is applied to it at C, determine the angle of twist that occurs at C and compute the maximum shear stress and maximum shear strain in the brass and steel. Take $G_{st} = 11.5(10^3)$ ksi, $G_{br} = 5.6(10^3)$ ksi.

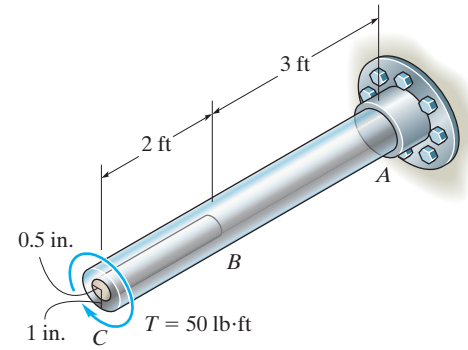

Equilibrium:

$$T_{br} + T_{st} - 50 = 0 \qquad \textbf{(1)}$$

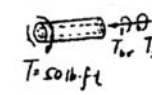

Both the steel tube and brass core undergo the same angle of twist $\phi_{C/B}$

$$\phi_{C/B} = \frac{TL}{JG} = \frac{T_{br}(2)(12)}{\frac{\pi}{2}(0.5^4)(5.6)(10^6)} = \frac{T_{st}(2)(12)}{\frac{\pi}{2}(1^4 - 0.5^4)(11.5)(10^6)}$$

$$T_{br} = 0.032464\, T_{st} \qquad \textbf{(2)}$$

Solving Eqs. (1) and (2) yields:

$$T_{st} = 48.428\ \text{lb}\cdot\text{ft}; \qquad T_{br} = 1.572\ \text{lb}\cdot\text{ft}$$

$$\phi_C = \Sigma\frac{TL}{JG} = \frac{1.572(12)(2)(12)}{\frac{\pi}{2}(0.5^4)(5.6)(10^6)} + \frac{50(12)(3)(12)}{\frac{\pi}{2}(1^4)(11.5)(10^6)}$$

$$= 0.002019\ \text{rad} = 0.116^\circ \qquad \textbf{Ans.}$$

$$(\tau_{st})_{\max AB} = \frac{T_{AB}c}{J} = \frac{50(12)(1)}{\frac{\pi}{2}(1^4)} = 382\ \text{psi}$$

$$(\tau_{st})_{\max BC} = \frac{T_{st}c}{J} = \frac{48.428(12)(1)}{\frac{\pi}{2}(1^4 - 0.5^4)} = 394.63\ \text{psi} = 395\ \text{psi (Max)} \qquad \textbf{Ans.}$$

$$(\gamma_{st})_{\max} = \frac{(\tau_{st})_{\max}}{G} = \frac{394.63}{11.5(10^6)} = 34.3(10^{-6})\ \text{rad} \qquad \textbf{Ans.}$$

$$(\tau_{br})_{\max} = \frac{T_{br}c}{J} = \frac{1.572(12)(0.5)}{\frac{\pi}{2}(0.5^4)} = 96.08\ \text{psi} = 96.1\ \text{psi (Max)} \qquad \textbf{Ans.}$$

$$(\gamma_{br})_{\max} = \frac{(\tau_{br})_{\max}}{G} = \frac{96.08}{5.6(10^6)} = 17.2(10^{-6})\ \text{rad} \qquad \textbf{Ans.}$$

Ans:
$\phi_C = 0.116^\circ$, $(\tau_{st})_{\max} = 395$ psi,
$(\gamma_{st})_{\max} = 34.3\ (10^{-6})$ rad, $(\tau_{br})_{\max} = 96.1$ psi,
$(\tau_{br})_{\max} = 17.2\ (10^{-6})$ rad

5–83. The motor A develops a torque at gear B of 450 lb · ft, which is applied along the axis of the 2-in.-diameter steel shaft CD. This torque is to be transmitted to the pinion gears at E and F. If these gears are temporarily fixed, determine the maximum shear stress in segments CB and BD of the shaft. Also, what is the angle of twist of each of these segments? The bearings at C and D only exert force reactions on the shaft and do not resist torque. $G_{st} = 12(10^3)$ ksi.

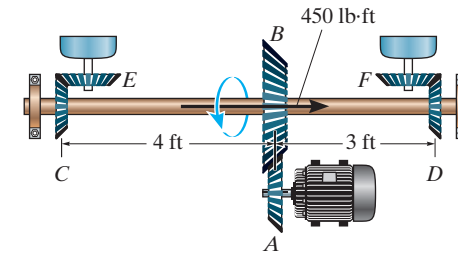

Equilibrium:

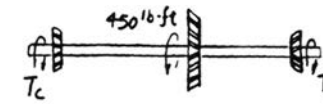

$$T_C + T_D - 450 = 0 \qquad \textbf{(1)}$$

Compatibility condition:

$$\phi_{B/C} = \phi_{B/D}$$

$$\frac{T_C(4)}{JG} = \frac{T_D(3)}{JG}$$

$$T_C = 0.75\,T_D \qquad \textbf{(2)}$$

Solving Eqs. (1) and (2) yields

$$T_D = 257.14 \text{ lb} \cdot \text{ft}$$

$$T_C = 192.86 \text{ lb} \cdot \text{ft}$$

$$(\tau_{BC})_{\max} = \frac{192.86(12)(1)}{\frac{\pi}{2}(1^4)} = 1.47 \text{ ksi} \qquad \textbf{Ans.}$$

$$(\tau_{BD})_{\max} = \frac{257.14(12)(1)}{\frac{\pi}{2}(1^4)} = 1.96 \text{ ksi} \qquad \textbf{Ans.}$$

$$\phi = \frac{192.86(12)(4)(12)}{\frac{\pi}{2}(1^4)(12)(10^6)} = 0.00589 \text{ rad} = 0.338° \qquad \textbf{Ans.}$$

Ans:

$(\tau_{BC})_{\max} = 1.47$ ksi, $(\tau_{BD})_{\max} = 1.96$ ksi,
$\phi_{B/C} = \phi_{B/D} = 0.338°$

***5–84.** The Am1004-T61 magnesium tube is bonded to the A-36 steel rod. If the allowable shear stresses for the magnesium and steel are $(\tau_{allow})_{mg} = 45$ MPa and $(\tau_{allow})_{st} = 75$ MPa, respectively, determine the maximum allowable torque that can be applied at A. Also, find the corresponding angle of twist of end A.

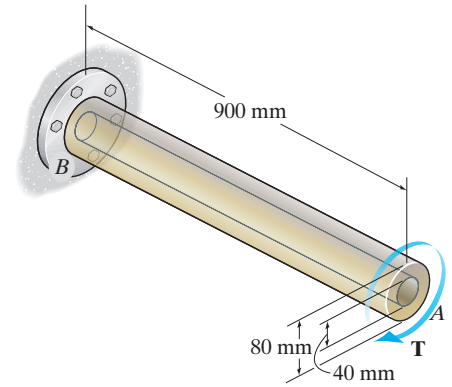

Equilibrium: Referring to the free-body diagram of the cut part of the assembly shown in Fig. *a*,

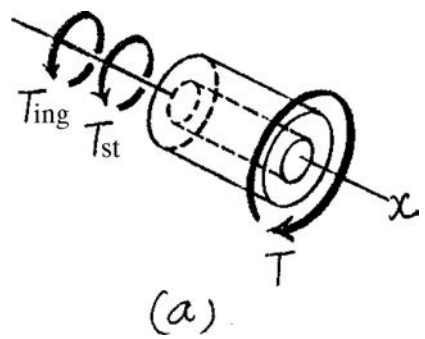

$$\Sigma M_x = 0; \quad T_{mg} + T_{st} - T = 0 \tag{1}$$

Compatibility Equation: Since the steel rod is bonded firmly to the magnesium tube, the angle of twist of the rod and the tube must be the same. Thus,

$$(\phi_{st})_A = (\phi_{mg})_A$$

$$\frac{T_{st}L}{\frac{\pi}{2}(0.02^4)(75)(10^9)} = \frac{T_{mg}L}{\frac{\pi}{2}(0.04^4 - 0.02^4)(18)(10^9)}$$

$$T_{st} = 0.2778T_{mg} \tag{2}$$

Solving Eqs. (1) and (2),

$$T_{mg} = 0.7826T \qquad T_{st} = 0.2174T$$

Allowable Shear Stress:

$$(\tau_{allow})_{mg} = \frac{T_{mg}c}{J}; \quad 45(10^6) = \frac{0.7826T(0.04)}{\frac{\pi}{2}(0.04^4 - 0.02^4)}$$

$$T = 5419.25 \text{ N}\cdot\text{m}$$

$$(\tau_{allow})_{st} = \frac{T_{st}c}{J}; \quad 75(10^6) = \frac{0.2174T(0.02)}{\frac{\pi}{2}(0.02^4)}$$

$$T = 4335.40 \text{ N}\cdot\text{m} = 4.34 \text{ kN}\cdot\text{m (control!)} \qquad \textbf{Ans.}$$

Angle of Twist: Using the result of T, $T_{st} = 942.48$ N · m. We have

$$\phi_A = \frac{T_{st}L}{J_{st}G_{st}} = \frac{942.48(0.9)}{\frac{\pi}{2}(0.02^4)(75)(10^9)} = 0.045 \text{ rad} = 2.58^\circ \qquad \textbf{Ans.}$$

5–85. The Am1004-T61 magnesium tube is bonded to the A-36 steel rod. If a torque of $T = 5\ \text{kN}\cdot\text{m}$ is applied to end A, determine the maximum shear stress in each material. Sketch the shear stress distribution.

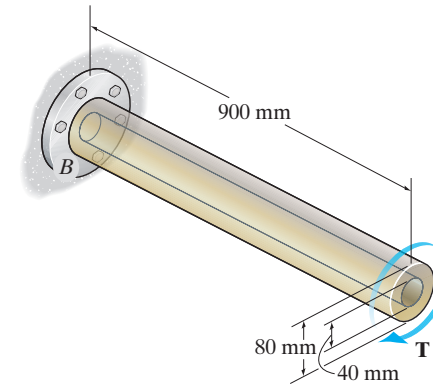

Equilibrium: Referring to the free-body diagram of the cut part of the assembly shown in Fig. *a*,

$$\Sigma M_x = 0; \quad T_{mg} + T_{st} - 5(10^3) = 0 \qquad (1)$$

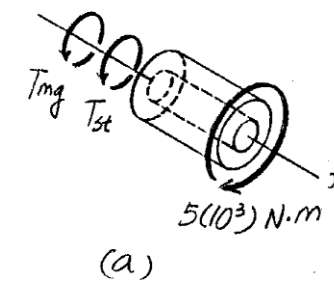

Compatibility Equation: Since the steel rod is bonded firmly to the magnesium tube, the angle of twist of the rod and the tube must be the same. Thus,

$$(\phi_{st})_A = (\phi_{mg})_A$$

$$\frac{T_{st}L}{\frac{\pi}{2}(0.02^4)(75)(10^9)} = \frac{T_{mg}L}{\frac{\pi}{2}(0.04^4 - 0.02^4)(18)(10^9)}$$

$$T_{st} = 0.2778T_{mg} \qquad (2)$$

Solving Eqs. (1) and (2),

$$T_{mg} = 3913.04\ \text{N}\cdot\text{m} \qquad T_{st} = 1086.96\ \text{N}\cdot\text{m}$$

Maximum Shear Stress:

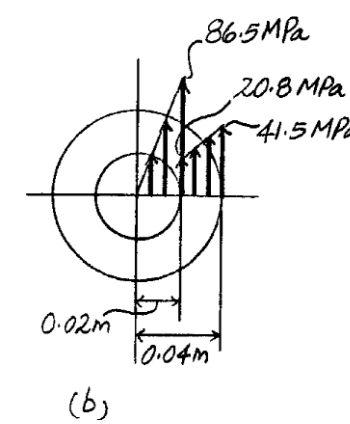

$$(\tau_{st})_{max} = \frac{T_{st}c_{st}}{J_{st}} = \frac{1086.96(0.02)}{\frac{\pi}{2}(0.02^4)} = 86.5\ \text{MPa} \qquad \textbf{Ans.}$$

$$(\tau_{mg})_{max} = \frac{T_{mg}c_{mg}}{J_{mg}} = \frac{3913.04(0.04)}{\frac{\pi}{2}(0.04^4 - 0.02^4)} = 41.5\ \text{MPa} \qquad \textbf{Ans.}$$

$$(\tau_{mg})|_{\rho=0.02\ \text{m}} = \frac{T_{mg}\rho}{J_{mg}} = \frac{3913.04(0.02)}{\frac{\pi}{2}(0.04^4 - 0.02^4)} = 20.8\ \text{MPa} \qquad \textbf{Ans.}$$

Ans:

$(\tau_{st})_{max} = 86.5$ MPa, $(\tau_{mg})_{max} = 41.5$ MPa, $(\tau_{mg})|_{\rho=0.02\text{m}} = 20.8$ MPa

5–86. The two shafts are made of A-36 steel. Each has a diameter of 25 mm and they are connected using the gears fixed to their ends. Their other ends are attached to fixed supports at A and B. They are also supported by journal bearings at C and D, which allow free rotation of the shafts along their axes. If a torque of 500 N · m is applied to the gear at E as shown, determine the reactions at A and B.

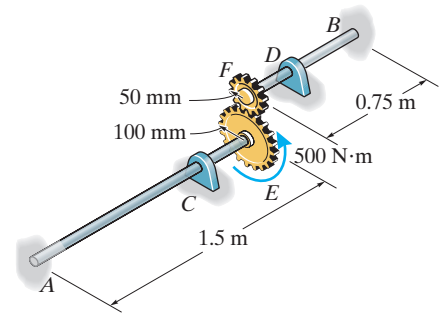

Equilibrium:

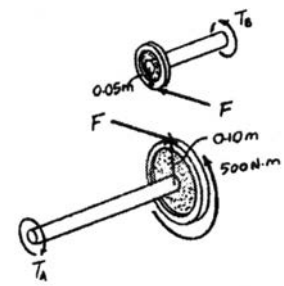

$$T_A + F(0.1) - 500 = 0 \qquad \textbf{[1]}$$

$$T_B - F(0.05) = 0 \qquad \textbf{[2]}$$

From Eqs. [1] and [2]

$$T_A + 2T_B - 500 = 0 \qquad \textbf{[3]}$$

Compatibility:

$$0.1\phi_E = 0.05\phi_F$$

$$\phi_E = 0.5\phi_F$$

$$\frac{T_A(1.5)}{JG} = 0.5\left[\frac{T_B(0.75)}{JG}\right]$$

$$T_A = 0.250T_B \qquad \textbf{[4]}$$

Solving Eqs. [3] and [4] yields:

$$T_B = 222 \text{ N} \cdot \text{m} \qquad \textbf{Ans.}$$

$$T_A = 55.6 \text{ N} \cdot \text{m} \qquad \textbf{Ans.}$$

Ans:

$T_B = 22.2$ N · m, $T_A = 55.6$ N · m

5–87. Determine the rotation of the gear at E in Prob. 5–86.

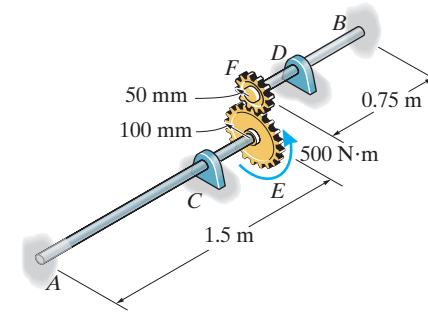

Equilibrium:

$$T_A + F(0.1) - 500 = 0 \qquad \textbf{[1]}$$

$$T_B - F(0.05) = 0 \qquad \textbf{[2]}$$

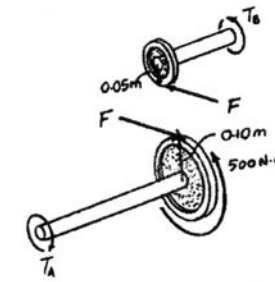

From Eqs. [1] and [2]

$$T_A + 2T_B - 500 = 0 \qquad \textbf{[3]}$$

Compatibility:

$$0.1\phi_E = 0.05\phi_F$$

$$\phi_E = 0.5\phi_F$$

$$\frac{T_A(1.5)}{JG} = 0.5\left[\frac{T_B(0.75)}{JG}\right]$$

$$T_A = 0.250T_B \qquad \textbf{[4]}$$

Solving Eqs. [3] and [4] yields:

$$T_B = 222.22\ \text{N}\cdot\text{m} \qquad T_A = 55.56\ \text{N}\cdot\text{m}$$

Angle of Twist:

$$\phi_E = \frac{T_A L}{JG} = \frac{55.56(1.5)}{\frac{\pi}{2}(0.0125^4)(75.0)(10^9)}$$

$$= 0.02897\ \text{rad} = 1.66^\circ \qquad \textbf{Ans.}$$

Ans:
$\phi_E = 1.66^\circ$

***5–88.** A rod is made from two segments: AB is steel and BC is brass. It is fixed at its ends and subjected to a torque of $T = 680\ \text{N}\cdot\text{m}$. If the steel portion has a diameter of 30 mm, determine the required diameter of the brass portion so the reactions at the walls will be the same. $G_{st} = 75$ GPa, $G_{br} = 39$ GPa.

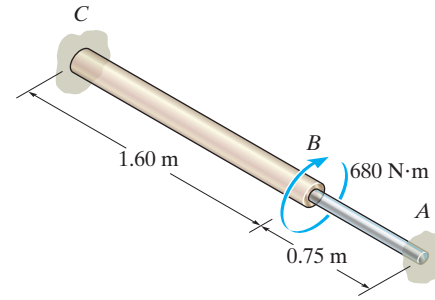

Compatibility Condition:

$$\phi_{B/C} = \phi_{B/A}$$

$$\frac{T(1.60)}{\frac{\pi}{2}(c^4)(39)(10^9)} = \frac{T(0.75)}{\frac{\pi}{2}(0.015^4)(75)(10^9)}$$

$c = 0.02134$ m

$d = 2c = 0.04269$ m $= 42.7$ mm **Ans.**

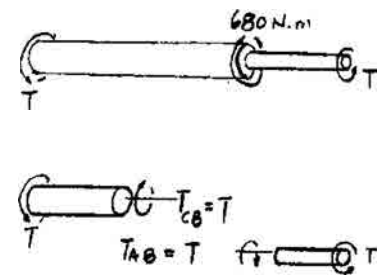

5–89. Determine the absolute maximum shear stress in the shaft of Prob. 5–88.

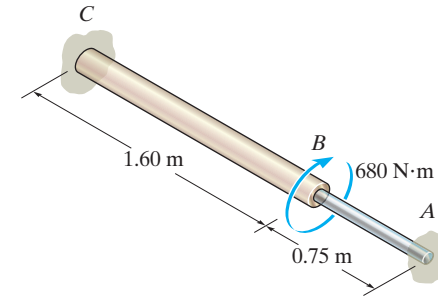

Equilibrium,

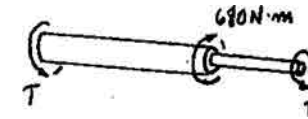

$$2T = 680$$

$$T = 340 \text{ N} \cdot \text{m}$$

$\tau_{\substack{\text{abs}\\\text{max}}}$ occurs in the steel. See solution to Prob. 5–88.

$$\tau_{\substack{\text{abs}\\\text{max}}} = \frac{Tc}{J} = \frac{340(0.015)}{\frac{\pi}{2}(0.015)^4}$$

$$= 64.1 \text{ MPa}$$ **Ans.**

Ans:

$\tau_{\substack{\text{abs}\\\text{max}}} = 64.1$ MPa

5–90. The composite shaft consists of a mid-section that includes the 1-in.-diameter solid shaft and a tube that is welded to the rigid flanges at A and B. Neglect the thickness of the flanges and determine the angle of twist of end C of the shaft relative to end D. The shaft is subjected to a torque of 800 lb · ft. The material is A-36 steel.

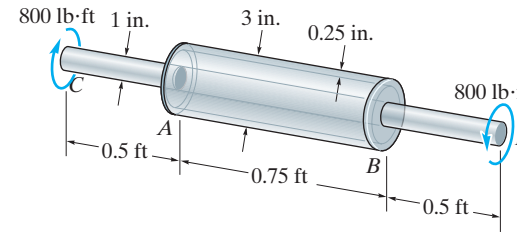

Equilibrium:

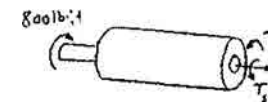

$$800(12) - T_\gamma - T_s = 0$$

Compatibility Condition:

$$\phi_T = \phi_S; \qquad \frac{T_T(0.75)(12)}{\frac{\pi}{2}((1.5)^4 - (1.25)^4)G} = \frac{T_S(0.75)(12)}{\frac{\pi}{2}(0.5)^4 G}$$

$$T_T = 9376.42 \text{ lb} \cdot \text{in.}$$

$$T_S = 223.58 \text{ lb} \cdot \text{in.}$$

$$\phi_{C/D} = \Sigma\frac{TL}{JG} = \frac{800(12)(1)(12)}{\frac{\pi}{2}(0.5)^4(11.0)(10^6)} + \frac{223.58(0.75)(12)}{\frac{\pi}{2}(0.5)^4(11.0)(10^6)} = 0.1085 \text{ rad} = 6.22^\circ \quad \textbf{Ans.}$$

Ans:
$\phi_{C/D} = 6.22^\circ$

5–91. The A992 steel shaft is made from two segments. AC has a diameter of 0.5 in. and CB has a diameter of 1 in. If the shaft is fixed at its ends A and B and subjected to a uniform distributed torque of 60 lb · in./in. along segment CB, determine the absolute maximum shear stress in the shaft.

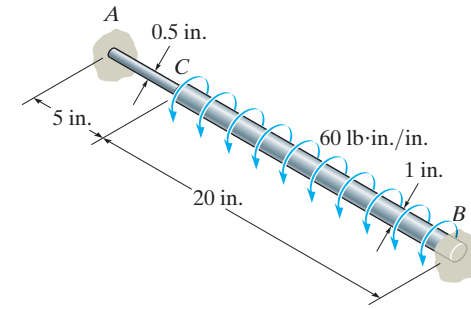

Equilibrium:

$$T_A + T_B - 60(20) = 0 \qquad \textbf{(1)}$$

Compatibility condition:

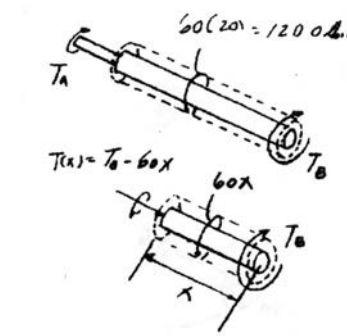

$$\phi_{C/B} = \phi_{C/A}$$

$$\phi_{C/B} = \int \frac{T(x)\,dx}{JG} = \int_0^{20} \frac{(T_B - 60x)\,dx}{\frac{\pi}{2}(0.5^4)(11.0)(10^6)}$$

$$= 18.52(10^{-6})T_B - 0.011112$$

$$18.52(10^{-6})T_B - 0.011112 = \frac{T_A(5)}{\frac{\pi}{2}(0.25^4)(11.0)(10^6)}$$

$$18.52(10^{-6})T_B - 74.08(10^{-6})T_A = 0.011112$$

$$18.52T_B - 74.08T_A = 11112 \qquad \textbf{(2)}$$

Solving Eqs. (1) and (2) yields:

$$T_A = 120.0 \text{ lb} \cdot \text{in.}; \qquad T_B = 1080 \text{ lb} \cdot \text{in.}$$

$$(\tau_{\max})_{BC} = \frac{T_B\,c}{J} = \frac{1080(0.5)}{\frac{\pi}{2}(0.5^4)} = 5.50 \text{ ksi}$$

$$(\tau_{\max})_{AC} = \frac{T_A\,c}{J} = \frac{120.0(0.25)}{\frac{\pi}{2}(0.25^4)} = 4.89 \text{ ksi}$$

$$\tau_{\substack{\text{abs}\\ \text{max}}} = 5.50 \text{ ksi} \qquad \textbf{Ans.}$$

Ans:

$\tau_{\substack{\text{abs}\\ \text{max}}} = 5.50$ ksi

***5–92.** If the shaft is subjected to a uniform distributed torque of $t = 20\ \text{kN}\cdot\text{m/m}$, determine the maximum shear stress developed in the shaft. The shaft is made of 2014-T6 aluminum alloy and is fixed at A and C.

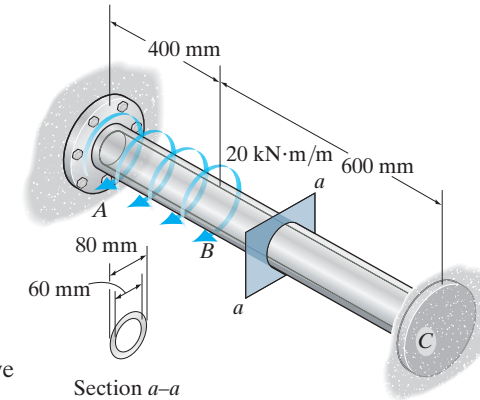

Equilibrium: Referring to the free-body diagram of the shaft shown in Fig. *a*, we have

$$\Sigma M_x = 0; \quad T_A + T_C - 20(10^3)(0.4) = 0 \qquad \textbf{(1)}$$

Compatibility Equation: The resultant torque of the distributed torque within the region x of the shaft is $T_R = 20(10^3)x\ \text{N}\cdot\text{m}$. Thus, the internal torque developed in the shaft as a function of x when end C is free is $T(x) = 20(10^3)x\ \text{N}\cdot\text{m}$, Fig. *b*. Using the method of superposition, Fig. *c*,

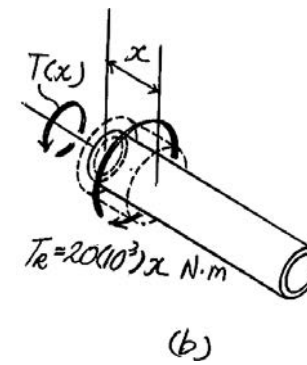

$$\phi_C = (\phi_C)_t - (\phi_C)_{T_C}$$

$$0 = \int_0^{0.4\text{ m}} \frac{T(x)dx}{JG} - \frac{T_C L}{JG}$$

$$0 = \int_0^{0.4\text{ m}} \frac{20(10^3)xdx}{JG} - \frac{T_C(1)}{JG}$$

$$0 = 20(10^3)\left(\frac{x^2}{2}\right)\Bigg|_0^{0.4\text{ m}} - T_C$$

$$T_C = 1600\ \text{N}\cdot\text{m}$$

Substituting this result into Eq. (1),

$$T_A = 6400\ \text{N}\cdot\text{m}$$

Maximum Shear Stress: By inspection, the maximum internal torque occurs at support A. Thus,

$$(\tau_{\max})_{\text{abs}} = \frac{T_A c}{J} = \frac{6400(0.04)}{\frac{\pi}{2}\left(0.04^4 - 0.03^4\right)} = 93.1\ \text{MPa} \qquad \textbf{Ans.}$$

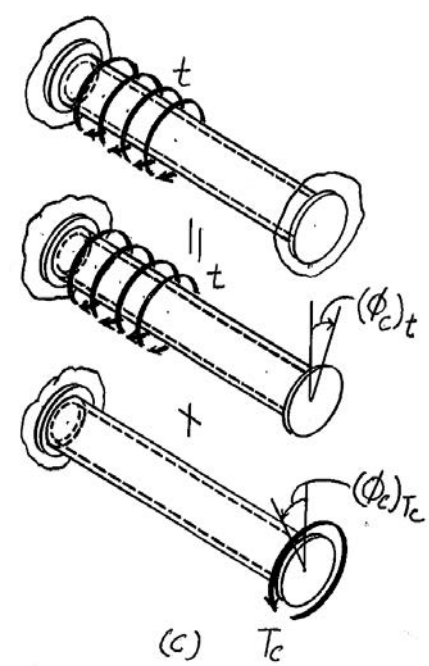

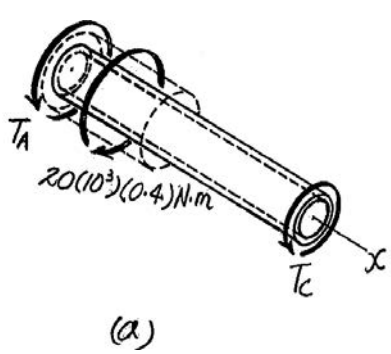

5–93. The tapered shaft is confined by the fixed supports at A and B. If a torque $\mathbf{T}$ is applied at its mid-point, determine the reactions at the supports.

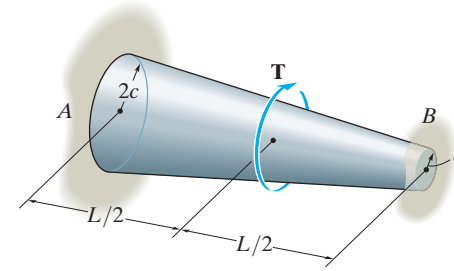

Equilibrium:

$$T_A + T_B - T = 0 \qquad [1]$$

Section Properties:

$$r(x) = c + \frac{c}{L}x = \frac{c}{L}(L + x)$$

$$J(x) = \frac{\pi}{2}\left[\frac{c}{L}(L + x)\right]^4 = \frac{\pi c^4}{2L^4}(L + x)^4$$

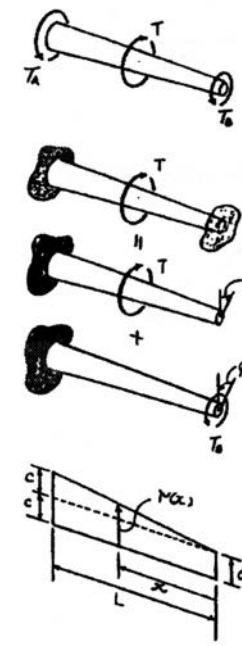

Angle of Twist:

$$\phi_T = \int \frac{T\,dx}{J(x)G} = \int_{\frac{L}{2}}^{L} \frac{T\,dx}{\frac{\pi c^4}{2L^4}(L + x)^4 G}$$

$$= \frac{2TL^4}{\pi c^4 G}\int_{\frac{L}{2}}^{L} \frac{dx}{(L + x)^4}$$

$$= -\frac{2TL^4}{3\pi c^4 G}\left[\frac{1}{(L + x)^3}\right]\Bigg|_{\frac{L}{2}}^{L}$$

$$= \frac{37TL}{324\,\pi c^4 G}$$

$$\phi_B = \int \frac{T\,dx}{J(x)G} = \int_0^L \frac{T_B\,dx}{\frac{\pi c^4}{2L^4}(L + x)^4 G}$$

$$= \frac{2T_B L^4}{\pi c^4 G}\int_0^L \frac{dx}{(L + x)^4}$$

$$= -\frac{2T_B L^4}{3\pi c^4 G}\left[\frac{1}{(L + x)^3}\right]\Bigg|_0^L$$

$$= \frac{7T_B L}{12\pi c^4 G}$$

Compatibility:

$$0 = \phi_T - \phi_B$$

$$0 = \frac{37TL}{324\pi c^4 G} - \frac{7T_B L}{12\pi c^4 G}$$

$$T_B = \frac{37}{189}T \qquad \textbf{Ans.}$$

Substituting the result into Eq. [1] yields:

$$T_A = \frac{152}{189}T \qquad \textbf{Ans.}$$

Ans:

$$T_B = \frac{37}{189}T,\ T_A = \frac{152}{189}T$$

5–94. The shaft of radius c is subjected to a distributed torque t, measured as torque/length of shaft. Determine the reactions at the fixed supports A and B.

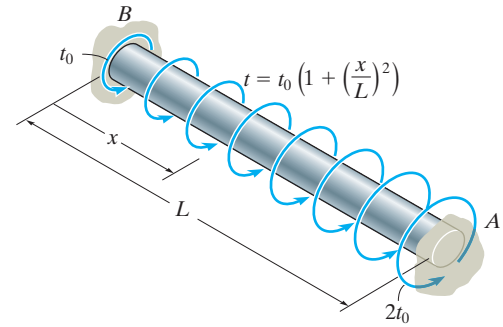

$$T(x) = \int_0^x t_0\left(1 + \frac{x^2}{L^2}\right)dx = t_0\left(x + \frac{x^3}{3L^2}\right) \qquad \textbf{(1)}$$

By superposition:

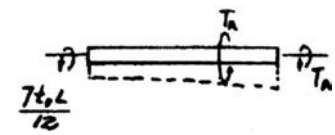

$$0 = \phi - \phi_B$$

$$0 = \int_0^L \frac{t_0\left(x + \frac{x^3}{3L^2}\right)dx}{JG} - \frac{T_B(L)}{JG} = \frac{7t_0L^2}{12} - T_B(L)$$

$$T_B = \frac{7t_0L}{12} \qquad \textbf{Ans.}$$

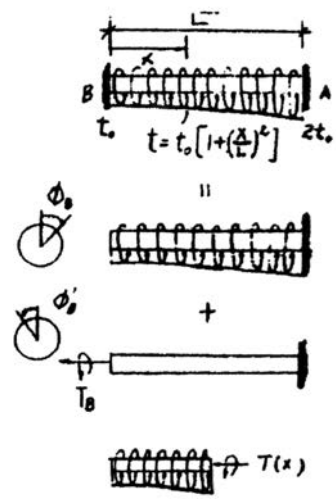

From Eq. (1),

$$T = t_0\left(L + \frac{L^3}{3L^2}\right) = \frac{4t_0L}{3}$$

$$T_A + \frac{7t_0L}{12} - \frac{4t_0L}{3} = 0$$

$$T_A = \frac{3t_0L}{4} \qquad \textbf{Ans.}$$

Ans:

$$T_B = \frac{7t_0L}{12},\ T_A = \frac{3t_0L}{4}$$

5–95. The aluminum rod has a square cross section of 10 mm by 10 mm. If it is 8 m long, determine the torque T that is required to rotate one end relative to the other end by 90°. $G_{al} = 28$ GPa, $(\tau_Y)_{al} = 240$ MPa.

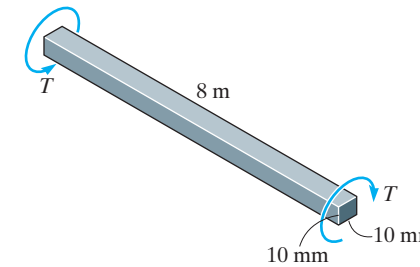

$$\phi = \frac{7.10\,TL}{a^4 G}$$

$$\frac{\pi}{2} = \frac{7.10T(8)}{(0.01)^4(28)(10^9)}$$

$$T = 7.74\ \text{N}\cdot\text{m}$$ **Ans.**

$$\tau_{max} = \frac{4.81T}{a^3}$$

$$= \frac{4.81(7.74)}{0.01^3}$$

$$= 37.2\ \text{MPa} < \tau_Y$$ **OK**

Ans:
$T = 7.74\ \text{N}\cdot\text{m}$

***5–96.** The shafts have elliptical and circular cross sections and are to be made from the same amount of a similar material. Determine the percent of increase in the maximum shear stress and the angle of twist for the elliptical shaft compared to the circular shaft when both shafts are subjected to the same torque and have the same length.

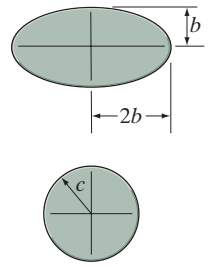

Section Properties: Since the elliptical and circular shaft are made of the same amount of material, their cross-sectional areas must be the same, Thus,

$$\pi(b)(2b) = \pi c^2$$

$$c = \sqrt{2}b$$

Maximum Shear Stress: For the circular shaft,

$$(\tau_{\max})_c = \frac{Tc}{J} = \frac{T(\sqrt{2}b)}{\frac{\pi}{2}(\sqrt{2}b)^4} = \frac{\sqrt{2}T}{2\pi b^3}$$

For the elliptical shaft,

$$(\tau_{\max})_e = \frac{2T}{\pi ab^2} = \frac{2T}{\pi(2b)(b^2)} = \frac{T}{\pi b^3}$$

Thus,

$$\text{\% of increase in shear stress} = \left[\frac{(\tau_{\max})_e - (\tau_{\max})_c}{(\tau_{\max})_c}\right] \times 100$$

$$= \left(\frac{\frac{T}{\pi b^3} - \frac{\sqrt{2}T}{2\pi b^3}}{\frac{\sqrt{2}T}{2\pi b^3}}\right) \times 100$$

$$= 41.4\% \qquad \textbf{Ans.}$$

Angle of Twist: For the circular shaft,

$$\phi_c = \frac{TL}{\frac{\pi}{2}(\sqrt{2}b)^4 G} = \frac{TL}{2\pi b^4 G}$$

For the elliptical shaft,

$$\phi_e = \frac{(a^2 + b^2)TL}{\pi a^3 b^3 G} = \frac{[(2b)^2 + b^2]TL}{\pi(2b)^3 b^3 G} = \frac{5TL}{8\pi b^4 G}$$

Thus,

$$\text{\% of increase in angle of twist} = \left[\frac{\phi_e - \phi_c}{\phi_c}\right] \times 100$$

$$= \left(\frac{\frac{5TL}{8\pi b^4 G} - \frac{TL}{2\pi b^4 G}}{\frac{TL}{2\pi b^4 G}}\right) \times 100$$

$$= 25\% \qquad \textbf{Ans.}$$

5–97. It is intended to manufacture a circular bar to resist torque; however, the bar is made elliptical in the process of manufacturing, with one dimension smaller than the other by a factor k as shown. Determine the factor by which the maximum shear stress is increased.

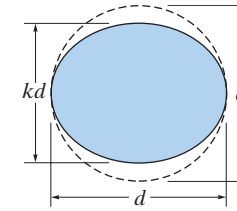

For the circular shaft:

$$(\tau_{\max})_c = \frac{Tc}{J} = \frac{T\left(\frac{d}{2}\right)}{\frac{\pi}{2}\left(\frac{d}{2}\right)^4} = \frac{16T}{\pi\, d^3}$$

For the elliptical shaft:

$$(\tau_{\max})_c = \frac{2T}{\pi\, a\, b^2} = \frac{2T}{\pi\left(\frac{d}{2}\right)\left(\frac{kd}{2}\right)^2} = \frac{16T}{\pi\, k^2\, d^3}$$

$$\text{Factor of increase in maximum shear stress} = \frac{(\tau_{\max})_c}{(\tau_{\max})_c} = \frac{\frac{16T}{\pi\, k^2\, d^3}}{\frac{16T}{\pi\, d^3}}$$

$$= \frac{1}{k^2} \qquad \textbf{Ans.}$$

Ans:
Factor of increase in max. shear stress $= \dfrac{1}{k^2}$

5–98. The shaft is made of red brass C83400 and has an elliptical cross section. If it is subjected to the torsional loading shown, determine the maximum shear stress within regions AC and BC, and the angle of twist ϕ of end B relative to end A.

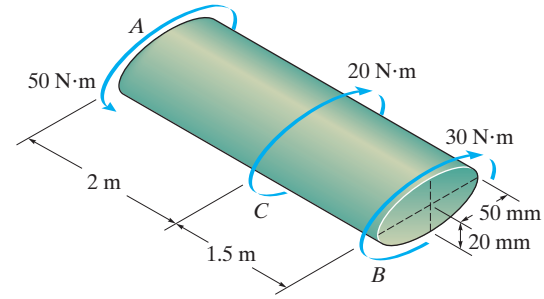

Maximum Shear Stress:

$$(\tau_{BC})_{\max} = \frac{2T_{BC}}{\pi\, a\, b^2} = \frac{2(30.0)}{\pi(0.05)(0.02^2)}$$

$$= 0.955 \text{ MPa} \qquad \textbf{Ans.}$$

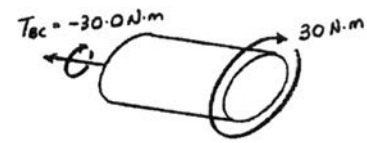

$$(\tau_{AC})_{\max} = \frac{2T_{AC}}{\pi\, a\, b^2} = \frac{2(50.0)}{\pi(0.05)(0.02^2)}$$

$$= 1.59 \text{ MPa} \qquad \textbf{Ans.}$$

Angle of Twist:

$$\phi_{B/A} = \sum \frac{(a^2 + b^2)T\,L}{\pi\, a^3 b^3 G}$$

$$= \frac{(0.05^2 + 0.02^2)}{\pi(0.05^3)(0.02^3)(37.0)(10^9)}[(-30.0)(1.5) + (-50.0)(2)]$$

$$= -0.003618 \text{ rad} = 0.207^\circ \qquad \textbf{Ans.}$$

Ans:

$(\tau_{BC})_{\max} = 0.955$ MPa, $(\tau_{AC})_{\max} = 1.59$ MPa, $\phi_{B/A} = 0.207^\circ$

5–99. Solve Prob. 5–98 for the maximum shear stress within regions AC and BC, and the angle of twist ϕ of end B relative to C.

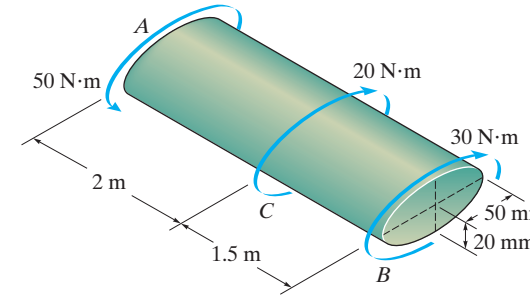

Maximum Shear Stress:

$$(\tau_{BC})_{\max} = \frac{2T_{BC}}{\pi\, a\, b^2} = \frac{2(30.0)}{\pi(0.05)(0.02^2)}$$

$$= 0.955 \text{ MPa}$$ **Ans.**

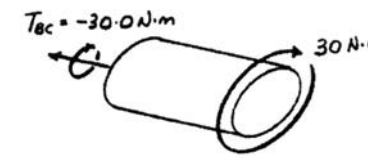

$$(\tau_{AC})_{\max} = \frac{2T_{AC}}{\pi\, a\, b^2} = \frac{2(50.0)}{\pi(0.05)(0.02^2)}$$

$$= 1.59 \text{ MPa}$$ **Ans.**

Angle of Twist:

$$\phi_{B/C} = \frac{(a^2 + b^2)\, T_{BC}\, L}{\pi\, a^3 b^3 G}$$

$$= \frac{(0.05^2 + 0.02^2)(-30.0)(1.5)}{\pi(0.05^3)(0.02^3)(37.0)(10^9)}$$

$$= -0.001123 \text{ rad} = 0.0643°$$ **Ans.**

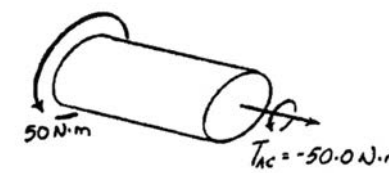

Ans:

$(\tau_{BC})_{\max} = 0.955$ MPa, $(\tau_{AC})_{\max} = 1.59$ MPa, $\phi_{B/C} = 0.0643°$

***5–100.** If end B of the shaft, which has an equilateral triangle cross section, is subjected to a torque of $T = 900\ \text{lb}\cdot\text{ft}$, determine the maximum shear stress developed in the shaft. Also, find the angle of twist of end B. The shaft is made from 6061-T1 aluminum.

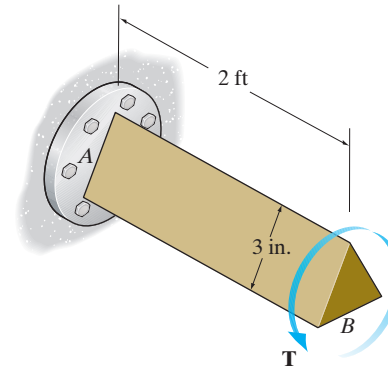

Maximum Shear Stress:

$$\tau_{\max} = \frac{20T}{a^3} = \frac{20(900)(12)}{3^3} = 8000\ \text{psi} = 8\ \text{ksi} \qquad \textbf{Ans.}$$

Angle of Twist:

$$\phi = \frac{46TL}{a^4G}$$

$$= \frac{46(900)(12)(2)(12)}{3^4(3.7)(10^6)}$$

$$= 0.03978\ \text{rad} = 2.28^\circ \qquad \textbf{Ans.}$$

5–101. If the shaft has an equilateral triangle cross section and is made from an alloy that has an allowable shear stress of $\tau_{allow} = 12$ ksi, determine the maximum allowable torque **T** that can be applied to end B. Also, find the corresponding angle of twist of end B.

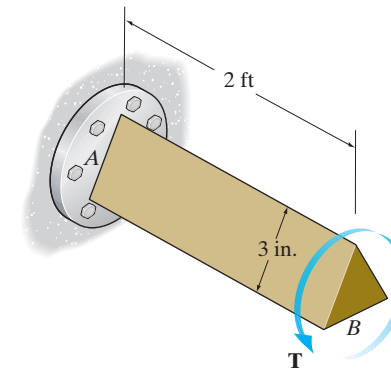

Allowable Shear Stress:

$$\tau_{allow} = \frac{20T}{a^3}; \qquad 12 = \frac{20T}{3^3}$$

$$T = 16.2 \text{ kip} \cdot \text{in}\left(\frac{1 \text{ ft}}{12 \text{ in.}}\right) = 1.35 \text{ kip} \cdot \text{ft}$$ **Ans.**

Angle of Twist:

$$\phi = \frac{46TL}{a^4G}$$

$$= \frac{46(16.2)(10^3)(2)(12)}{3^4(3.7)(10^6)}$$

$$= 0.05968 \text{ rad} = 3.42°$$ **Ans.**

Ans:
$T = 1.35$ kip · ft, $\phi = 3.42°$

5–102. The aluminum strut is fixed between the two walls at A and B. If it has a 2 in. by 2 in. square cross section, and it is subjected to the torque of 80 lb · ft at C, determine the reactions at the fixed supports. Also, what is the angle of twist at C? $G_{al} = 3.8(10^3)$ ksi.

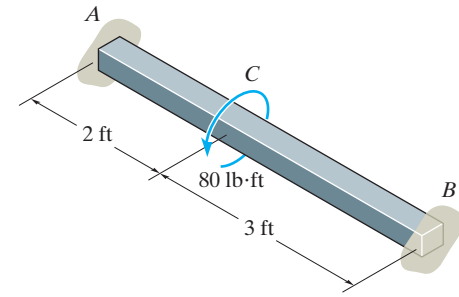

By superposition:

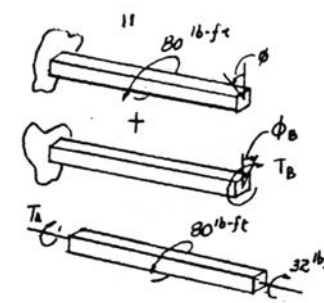

$$0 = \phi - \phi_B$$

$$0 = \frac{7.10(80)(2)}{a^4 G} - \frac{7.10(T_B)(5)}{a^4 G}$$

$$T_B = 32 \text{ lb} \cdot \text{ft}$$ **Ans.**

$$T_A + 32 - 80 = 0$$

$$T_A = 48 \text{ lb} \cdot \text{ft}$$ **Ans.**

$$\phi_C = \frac{7.10(32)(12)(3)(12)}{(2^4)(3.8)(10^6)} = 0.00161 \text{ rad} = 0.0925^\circ$$ **Ans.**

Ans:

$T_B = 32$ lb · ft, $T_A = 48$ lb · ft, $\phi_C = 0.0925^\circ$

5–103. A torque of 2 kip · in. is applied to the tube. If the wall thickness is 0.1 in., determine the average shear stress in the tube.

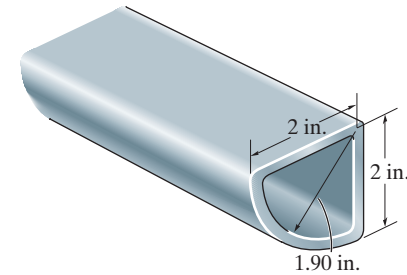

$$A_m = \frac{\pi(1.95^2)}{4} = 2.9865 \text{ in}^2$$

$$\tau_{avg} = \frac{T}{2t\,A_m} = \frac{2(10^3)}{2(0.1)(2.9865)} = 3.35 \text{ ksi}$$ **Ans.**

Ans:
$\tau_{avg} = 3.35$ ksi

***5–104.** The 6061-T6 aluminum bar has a square cross section of 25 mm by 25 mm. If it is 2 m long, determine the maximum shear stress in the bar and the rotation of one end relative to the other end.

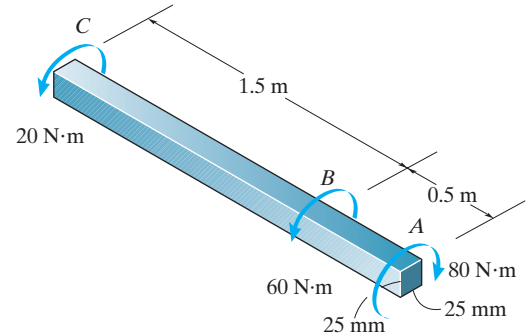

Maximum Shear Stress:

$$\tau_{\max} = \frac{4.81T_{\max}}{a^3} = \frac{4.81(80.0)}{(0.025^3)} = 24.6 \text{ MPa}$$ **Ans.**

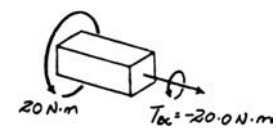

Angle of Twist:

$$\phi_{A/C} = \sum \frac{7.10TL}{a^4G} = \frac{7.10(-20.0)(1.5)}{(0.025^4)(26.0)(10^9)} + \frac{7.10(-80.0)(0.5)}{(0.025^4)(26.0)(10^9)}$$

$$= -0.04894 \text{ rad} = 2.80^\circ$$ **Ans.**

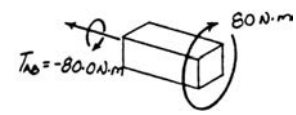

5–105. If the shaft is subjected to the torque of 3 kN · m, determine the maximum shear stress developed in the shaft. Also, find the angle of twist of end B. The shaft is made from A-36 steel. Set $a = 50$ mm.

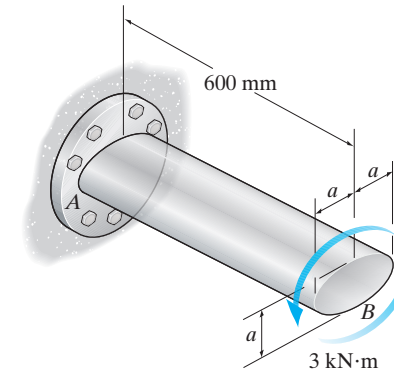

Maximum Shear Stress:

$$\tau_{\max} = \frac{2T}{\pi a b^2} = \frac{2(3)(10^3)}{\pi(0.05)(0.025^2)} = 61.1 \text{ MPa}$$ **Ans.**

Angle of Twist:

$$\phi = \frac{(a^2 + b^2)TL}{\pi a^3 b^3 G}$$

$$= \frac{(0.05^2 + 0.025^2)(3)(10^3)(0.6)}{\pi(0.05^3)(0.025^3)(75)(10^9)}$$

$$= 0.01222 \text{ rad} = 0.700°$$ **Ans.**

Ans:

$\tau_{\max} = 61.1$ MPa, $\phi_B = 0.700°$

5–106. If the shaft is made from A-36 steel having an allowable shear stress of $\tau_{\text{allow}} = 75$ MPa, determine the minimum dimension a for the cross-section to the nearest millimeter. Also, find the corresponding angle of twist at end B.

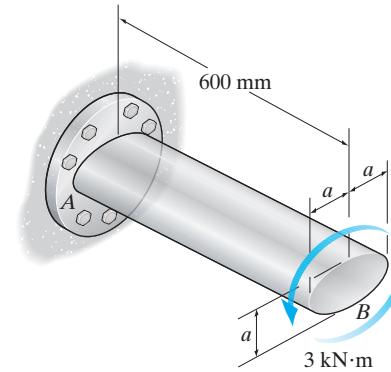

Allowable Shear Stress:

$$\tau_{\text{allow}} = \frac{2T}{\pi a b^2}; \qquad 75(10^6) = \frac{2(3)(10^3)}{\pi(a)(\frac{a}{2})^2}$$

$$a = 0.04670 \text{ m}$$

Use $a = 47$ mm **Ans.**

Angle of Twist:

$$\phi = \frac{(a^2 + b^2)TL}{\pi a^3 b^3 G}$$

$$= \frac{\left[0.047^2 + \left(\frac{0.047}{2}\right)^2\right](3)(10^3)(0.6)}{\pi(0.047^3)\left(\frac{0.047}{2}\right)^3(75)(10^9)}$$

$$= 0.01566 \text{ rad} = 0.897°$$ **Ans.**

Ans:
Use $a = 47$ mm, $\phi_B = 0.897°$

5–107. If the solid shaft is made from red brass C83400 copper having an allowable shear stress of $\tau_{\text{allow}} = 4$ ksi, determine the maximum allowable torque **T** that can be applied at B.

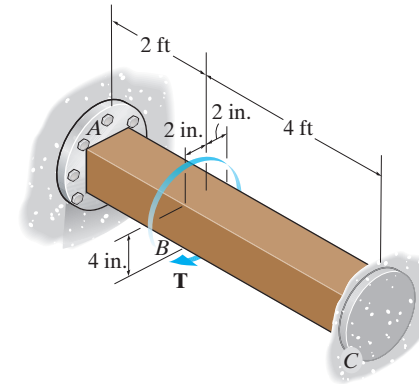

Equilibrium: Referring to the free-body diagram of the square bar shown in Fig. a, we have

$$\Sigma M_x = 0; \quad T_A + T_C - T = 0 \tag{1}$$

Compatibility Equation: Here, it is required that

$$\phi_{B/A} = \phi_{B/C}$$

$$\frac{7.10T_A(2)(12)}{a^4G} = \frac{7.10T_C(4)(12)}{a^4G}$$

$$T_A = 2T_C \tag{2}$$

Solving Eqs. (1) and (2),

$$T_C = \frac{1}{3}T \qquad T_A = \frac{2}{3}T$$

Allowable Shear Stress: Segment AB is critical since it is subjected to the greater internal torque.

$$\tau_{\text{allow}} = \frac{4.81T_A}{a^3}; \qquad 4 = \frac{4.81\left(\frac{2}{3}T\right)}{4^3}$$

$$T = 79.83 \text{ kip}\cdot\text{in}\left(\frac{1 \text{ ft}}{12 \text{ in.}}\right) = 6.65 \text{ kip}\cdot\text{ft} \qquad \textbf{Ans.}$$

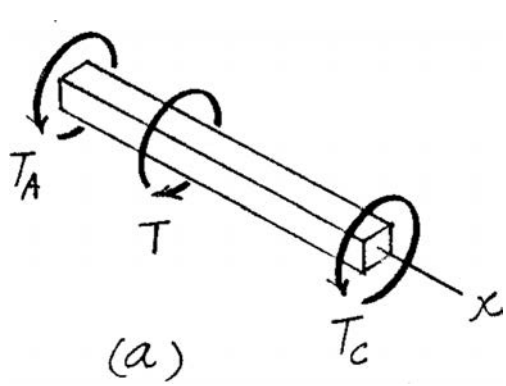

Ans:
$T = 6.65$ kip · ft

***5–108.** If the solid shaft is made from red brass C83400 copper and it is subjected to a torque $T = 6\ \text{kip}\cdot\text{ft}$ at B, determine the maximum shear stress developed in segments AB and BC.

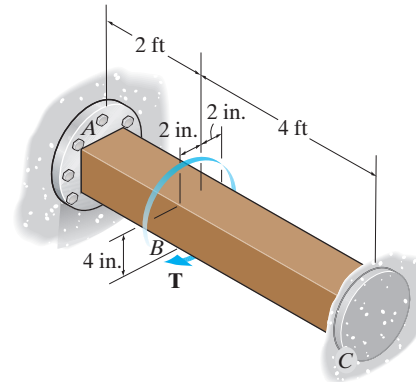

Equilibrium: Referring to the free-body diagram of the square bar shown in Fig. *a*, we have

$$\Sigma M_x = 0; \quad T_A + T_C - 6 = 0 \tag{1}$$

Compatibility Equation: Here, it is required that

$$\phi_{B/A} = \phi_{B/C}$$

$$\frac{7.10\,T_A(2)(12)}{a^4G} = \frac{7.10\,T_C(4)(12)}{a^4G}$$

$$T_A = 2T_C \tag{2}$$

Solving Eqs. (1) and (2),

$$T_C = 2\ \text{kip}\cdot\text{ft} \qquad\qquad T_A = 4\ \text{kip}\cdot\text{ft}$$

Maximum Shear Stress:

$$(\tau_{\max})_{AB} = \frac{4.81T_A}{a^3} = \frac{4.81(4)(12)}{4^3} = 3.61\ \text{ksi} \qquad \textbf{Ans.}$$

$$(\tau_{\max})_{BC} = \frac{4.81T_C}{a^3} = \frac{4.81(2)(12)}{4^3} = 1.80\ \text{ksi} \qquad \textbf{Ans.}$$

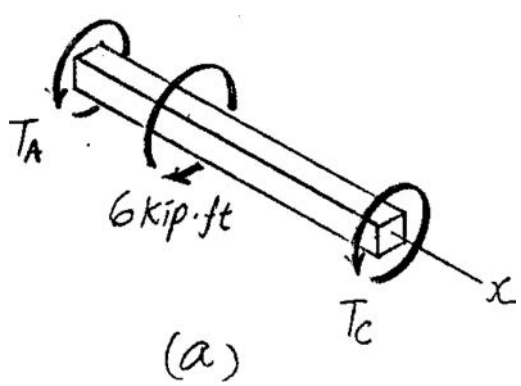

5–109. For a given maximum average stress, determine the factor by which the torque carrying capacity is increased if the half-circular section is reversed from the dashed-line position to the section shown. The tube is 0.1 in. thick.

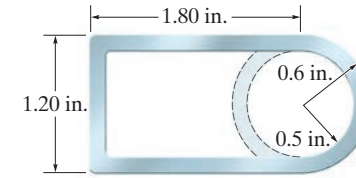

$$A_m = (1.10)(1.75) - \frac{\pi(0.55^2)}{2} = 1.4498 \text{ in}^2$$

$$A_m' = (1.10)(1.75) + \frac{\pi(0.55^2)}{2} = 2.4002 \text{ in}^2$$

$$\tau_{\max} = \frac{T}{2t\,A_m}$$

$$T = 2\,t\,A_m\,\tau_{\max}$$

$$\text{Factor} = \frac{2t\,A_m'\,\tau_{\max}}{2t\,A_m\,\tau_{\max}}$$

$$= \frac{A_m'}{A_m} = \frac{2.4002}{1.4498} = 1.66 \qquad \textbf{Ans.}$$

Ans:
Factor of increase = 1.66

5–110. For a given maximum average shear stress, determine the factor by which the torque-carrying capacity is increased if the half-circular sections are reversed from the dashed-line positions to the section shown. The tube is 0.1 in. thick.

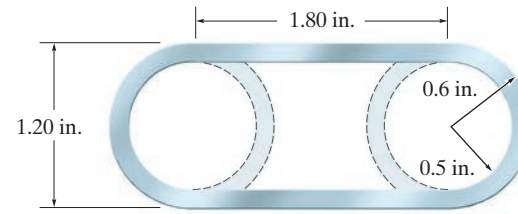

Section Properties:

$$A'_m = (1.1)(1.8) - \left[\frac{\pi\,(0.55^2)}{2}\right](2) = 1.02967 \text{ in}^2$$

$$A_m = (1.1)(1.8) + \left[\frac{\pi\,(0.55^2)}{2}\right](2) = 2.93033 \text{ in}^2$$

Average Shear Stress:

$$\tau_{\text{avg}} = \frac{T}{2\,t\,A_m}; \qquad T = 2\,t\,A_m\,\tau_{\text{avg}}$$

Hence, $$T' = 2\,t\,A'_m\,\tau_{\text{avg}}$$

$$\text{The factor of increase} = \frac{T}{T'} = \frac{A_m}{A'_m} = \frac{2.93033}{1.02967}$$

$$= 2.85 \qquad \textbf{Ans.}$$

Ans:
Factor of increase = 2.85

5–111. A torque T is applied to two tubes having the cross sections shown. Compare the shear flow developed in each tube.

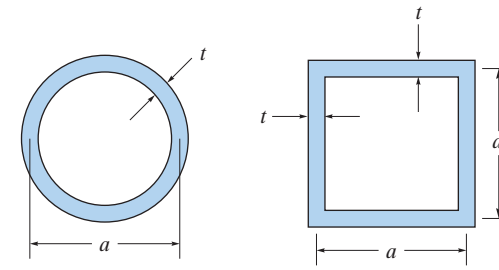

Circular tube:

$$q_{cr} = \frac{T}{2A_m} = \frac{T}{2\pi\,(a/2)^2} = \frac{2T}{\pi\,a^2}$$

Square tube:

$$q_{sq} = \frac{T}{2A_m} = \frac{T}{2a^2}$$

$$\frac{q_{sq}}{q_{cr}} = \frac{T/(2a^2)}{2T/(\pi\,a^2)} = \frac{\pi}{4}$$

Thus;

$$q_{sq} = \frac{\pi}{4}\,q_{cr}$$ **Ans.**

Ans:

$$q_{sq} = \frac{\pi}{4}\,q_{cr}$$

***5–112.** Due to a fabrication error the inner circle of the tube is eccentric with respect to the outer circle. By what percentage is the torsional strength reduced when the eccentricity e is one-fourth of the difference in the radii?

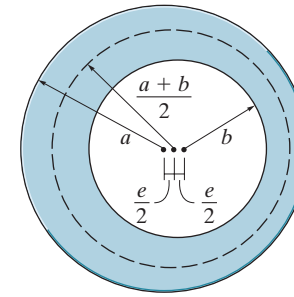

Average Shear Stress:

For the aligned tube

$$\tau_{avg} = \frac{T}{2\,t\,A_m} = \frac{T}{2(a-b)(\pi)\left(\frac{a+b}{2}\right)^2}$$

$$T = \tau_{avg}\,(2)(a-b)(\pi)\left(\frac{a+b}{2}\right)^2$$

For the eccentric tube

$$\tau_{avg} = \frac{T'}{2\,t\,A_m}$$

$$t = a - \frac{e}{2} - \left(\frac{e}{2} + b\right) = a - e - b$$

$$= a - \frac{1}{4}(a-b) - b = \frac{3}{4}(a-b)$$

$$T' = \tau_{avg}\,(2)\left[\frac{3}{4}(a-b)\right](\pi)\left(\frac{a+b}{2}\right)^2$$

$$\text{Factor} = \frac{T'}{T} = \frac{\tau_{avg}\,(2)\left[\frac{3}{4}(a-b)\right](\pi)\left(\frac{a+b}{2}\right)^2}{\tau_{avg}\,(2)(a-b)(\pi)\left(\frac{a+b}{2}\right)^2} = \frac{3}{4}$$

$$\text{Percent reduction in strength} = \left(1 - \frac{3}{4}\right) \times 100\ \% = 25\ \%$$ **Ans.**

5–113. Determine the constant thickness of the rectangular tube if average stress is not to exceed 12 ksi when a torque of $T = 20\ \text{kip}\cdot\text{in.}$ is applied to the tube. Neglect stress concentrations at the corners. The mean dimensions of the tube are shown.

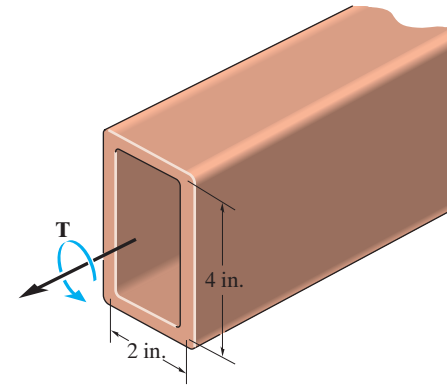

$$A_m = 2(4) = 8\ \text{in}^2$$

$$\tau_{\text{avg}} = \frac{T}{2t\ A_m}$$

$$12 = \frac{20}{2t\,(8)}$$

$$t = 0.104\ \text{in.}$$ **Ans.**

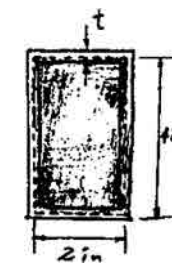

Ans:
$t = 0.104$ in.

5–114. Determine the torque T that can be applied to the rectangular tube if the average shear stress is not to exceed 12 ksi. Neglect stress concentrations at the corners. The mean dimensions of the tube are shown and the tube has a thickness of 0.125 in.

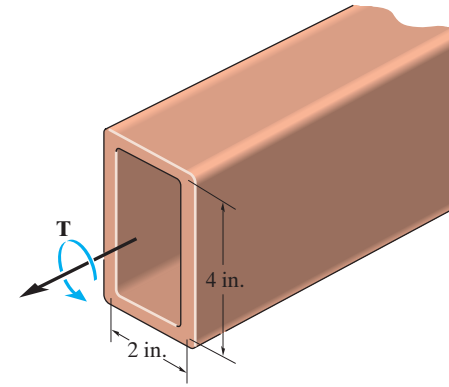

$A_m = 2(4) = 8 \text{ in}^2$

$\tau_{avg} = \dfrac{T}{2t\,A_m}; \qquad 12 = \dfrac{T}{2(0.125)(8)}$

$T = 24 \text{ kip} \cdot \text{in.} = 2 \text{ kip} \cdot \text{ft}$ **Ans.**

Ans:
$T = 2 \text{ kip} \cdot \text{ft}$

5–115. The steel tube has an elliptical cross section of mean dimensions shown and a constant thickness of $t = 0.2$ in. If the allowable shear stress is $\tau_{\text{allow}} = 8$ ksi, and the tube is to resist a torque of $T = 250\ \text{lb}\cdot\text{ft}$, determine the necessary dimension b. The mean area for the ellipse is $A_m = \pi b(0.5b)$.

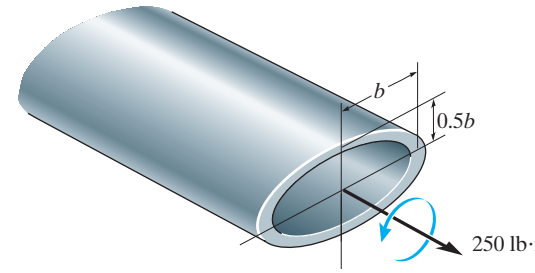

$$\tau_{\text{avg}} = \tau_{\text{allow}} = \frac{T}{2tA_m}$$

$$8(10^3) = \frac{250(12)}{2(0.2)(\pi)(b)(0.5b)}$$

$$b = 0.773 \text{ in.}$$ **Ans.**

Ans:
$b = 0.773$ in.

***5–116.** The tube is made of plastic, is 5 mm thick, and has the mean dimensions shown. Determine the average shear stress at points A and B if the tube is subjected to the torque of $T = 500\ \text{N}\cdot\text{m}$. Show the shear stress on volume elements located at these points. Neglect stress concentrations at the corners.

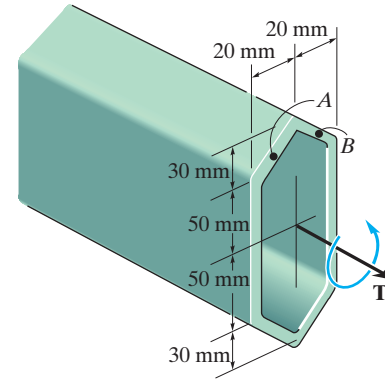

$$A_m = 2\left[\frac{1}{2}(0.04)(0.03)\right] + 0.1(0.04) = 0.0052\ \text{m}^2$$

$$(\tau_{\text{avg}})_A = (\tau_{\text{avg}})_B = \frac{T}{2tA_m}$$

$$= \frac{500}{2(0.005)(0.0052)}$$

$$= 9.62\ \text{MPa} \qquad \textbf{Ans.}$$

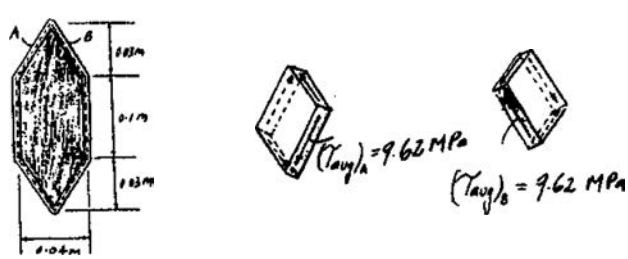

5–117. The mean dimensions of the cross section of the leading edge and torsion box of an airplane wing can be approximated as shown. If the wing is made of 2014-T6 aluminum alloy having an allowable shear stress of $\tau_{\text{allow}} = 125\text{ MPa}$ and the wall thickness is 10 mm, determine the maximum allowable torque and the corresponding angle of twist per meter length of the wing.

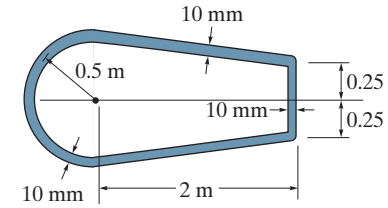

Section Properties: Referring to the geometry shown in Fig. *a*,

$$A_m = \frac{\pi}{2}\left(0.5^2\right) + \frac{1}{2}(1 + 0.5)(2) = 1.8927\text{ m}^2$$

$$\oint ds = \pi(0.5) + 2\sqrt{2^2 + 0.25^2} + 0.5 = 6.1019\text{ m}$$

Allowable Average Shear Stress:

$$\left(\tau_{\text{avg}}\right)_{\text{allow}} = \frac{T}{2tA_m}; \qquad 125(10^6) = \frac{T}{2(0.01)(1.8927)}$$

$$T = 4.7317(10^6)\text{ N}\cdot\text{m} = 4.73\text{ MN}\cdot\text{m} \qquad \textbf{Ans.}$$

Angle of Twist:

$$\phi = \frac{TL}{4A_m{}^2G}\oint\frac{ds}{t}$$

$$= \frac{4.7317(10^6)(1)}{4(1.8927^2)(27)(10^9)}\left(\frac{6.1019}{0.01}\right)$$

$$= 7.463(10^{-3})\text{ rad} = 0.428°/\text{m} \qquad \textbf{Ans.}$$

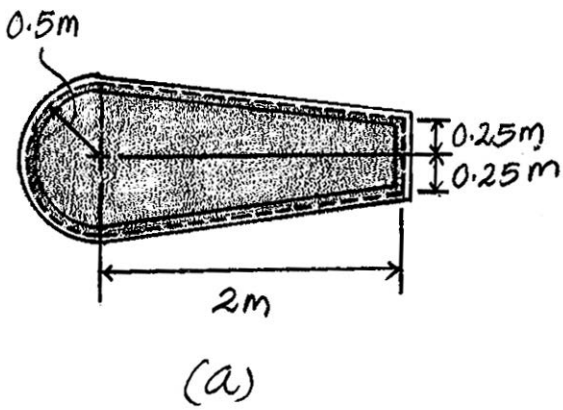

(a)

Ans:

$T = 4.73\text{ MN}\cdot\text{m}, \phi = 0.428°/\text{m}$

5–118. The mean dimensions of the cross section of the leading edge and torsion box of an airplane wing can be approximated as shown. If the wing is subjected to a torque of 4.5 MN · m and the wall thickness is 10 mm, determine the average shear stress developed in the wing and the angle of twist per meter length of the wing. The wing is made of 2014-T6 aluminum alloy.

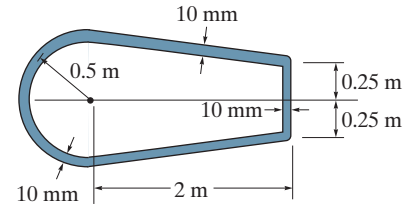

Section Properties: Referring to the geometry shown in Fig. *a*,

$$A_m = \frac{\pi}{2}(0.5^2) + \frac{1}{2}(1 + 0.5)(2) = 1.8927 \text{ m}^2$$

$$\oint ds = \pi(0.5) + 2\sqrt{2^2 + 0.25^2} + 0.5 = 6.1019 \text{ m}$$

Average Shear Stress:

$$\tau_{\text{avg}} = \frac{T}{2tA_m} = \frac{4.5(10^6)}{2(0.01)(1.8927)} = 119 \text{ MPa} \qquad \textbf{Ans.}$$

Angle of Twist:

$$\phi = \frac{TL}{4A_m{}^2G}\oint \frac{ds}{t}$$

$$= \frac{4.5(10^6)(1)}{4(1.8927^2)(27)(10^9)}\left(\frac{6.1019}{0.01}\right)$$

$$= 7.0973(10^{-3}) \text{ rad} = 0.407°/\text{m} \qquad \textbf{Ans.}$$

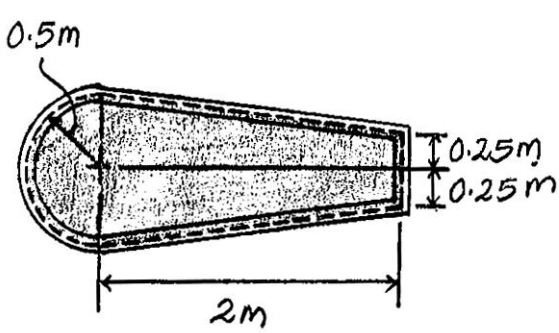

(a)

Ans:

$\tau_{\text{avg}} = 119$ MPa, $\phi = 0.407°/\text{m}$

5–119. The symmetric tube is made from a high-strength steel, having the mean dimensions shown and a thickness of 5 mm. If it is subjected to a torque of $T = 40\ \text{N}\cdot\text{m}$, determine the average shear stress developed at points A and B. Indicate the shear stress on volume elements located at these points.

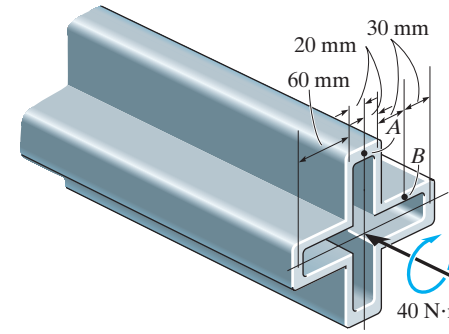

$$A_m = 4(0.04)(0.06) + (0.04)^2 = 0.0112\ \text{m}^2$$

$$\tau_{\text{avg}} = \frac{T}{2\,t\,A_m}$$

$$(\tau_{\text{avg}})_A = (\tau_{\text{avg}})_B = \frac{40}{2(0.005)(0.0112)} = 357\ \text{kPa}$$ **Ans.**

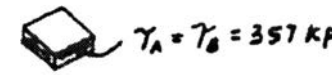

Ans:

$(\tau_{\text{avg}})_A = (\tau_{\text{avg}})_B = 357\ \text{kPa}$

***5–120.** The steel step shaft has an allowable shear stress of $\tau_{allow} = 8\,\text{MPa}$. If the transition between the cross sections has a radius $r = 4\,\text{mm}$, determine the maximum torque T that can be applied.

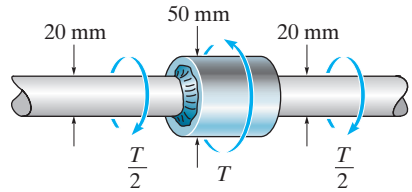

Allowable Shear Stress:

$$\frac{D}{d} = \frac{50}{20} = 2.5 \qquad \text{and} \qquad \frac{r}{d} = \frac{4}{20} = 0.20$$

From the text, $K = 1.25$

$$\tau_{max} = \tau_{allow} = K\frac{Tc}{J}$$

$$8(10^6) = 1.25\left[\frac{\frac{\pi}{2}(0.01)}{\frac{\pi}{2}(0.01^4)}\right]$$

$$T = 20.1\ \text{N}\cdot\text{m}$$ **Ans.**

5–121. The step shaft is to be designed to rotate at 720 rpm while transmitting 30 kW of power. Is this possible? The allowable shear stress is $\tau_{\text{allow}} = 12$ MPa and the radius at the transition on the shaft is 7.5 mm.

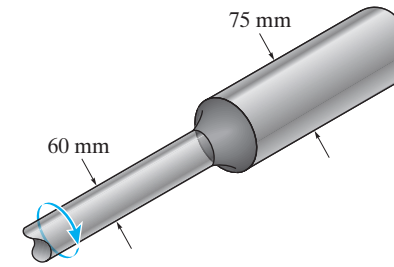

$$\omega = 720\,\frac{\text{rev}}{\text{min}}\left(\frac{2\pi\ \text{rad}}{1\ \text{rev}}\right)\frac{1\ \text{min}}{60\ \text{s}} = 24\,\pi\ \text{rad/s}$$

$$T = \frac{P}{\omega} = \frac{30(10^3)}{24\,\pi} = 397.89\ \text{N}\cdot\text{m}$$

$$\frac{D}{d} = \frac{75}{60} = 1.25 \quad \text{and} \quad \frac{r}{d} = \frac{7.5}{60} = 0.125; \quad K = 1.29$$

$$\tau = K\frac{Tc}{J}$$

$$\tau = 1.29\left[\frac{397.89(0.03)}{\frac{\pi}{2}(.03)^4}\right] = 12.1(10)^6 = 12.1\ \text{MPa} > \tau_{\text{allow}}$$

No, it is not possible. **Ans.**

Ans:
No, it is not possible.

5–122. The built-up shaft is designed to rotate at 540 rpm. If the radius at the transition on the shaft is $r = 7.2$ mm, and the allowable shear stress for the material is $\tau_{allow} = 55$ MPa, determine the maximum power the shaft can transmit.

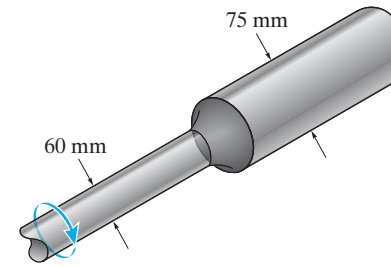

$$\frac{D}{d} = \frac{75}{60} = 1.25; \qquad \frac{r}{d} = \frac{7.2}{60} = 0.12$$

From Fig. 5-32, $K = 1.30$

$$\tau_{max} = K\frac{Tc}{J}; \qquad 55(10^6) = 1.30\left[\frac{T(0.03)}{\frac{\pi}{2}(0.03^4)}\right]; \qquad T = 1794.33\ \text{N}\cdot\text{m}$$

$$\omega = 540\,\frac{\text{rev}}{\text{min}}\left(\frac{2\pi\ \text{rad}}{1\ \text{rev}}\right)\frac{1\ \text{min}}{60\ \text{s}} = 18\,\pi\ \text{rad/s}$$

$$P = T\omega = 1794.33(18\pi) = 101466\ \text{W} = 101\ \text{kW}$$ **Ans.**

Ans:
$P = 101$ kW

5–123. The transition at the cross sections of the step shaft has a radius of 2.8 mm. Determine the maximum shear stress developed in the shaft.

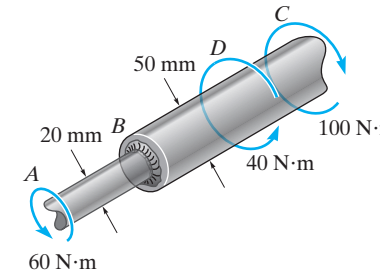

$$(\tau_{\max})_{CD} = \frac{T_{CD}c}{J} = \frac{100(0.025)}{\frac{\pi}{2}(0.025^4)}$$

$$= 4.07 \text{ MPa}$$

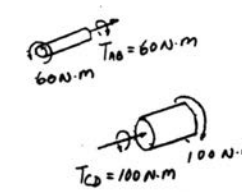

For the fillet:

$$\frac{D}{d} = \frac{50}{20} = 2.5; \qquad \frac{r}{d} = \frac{2.8}{20} = 0.14$$

From Fig. 5-32, $K = 1.325$

$$(\tau_{\max})_f = K\frac{T_{AB}c}{J} = 1.325\left[\frac{60(0.01)}{\frac{\pi}{2}(0.01^4)}\right]$$

$$= 50.6 \text{ MPa (max)} \qquad \textbf{Ans.}$$

Ans:

$\tau_{\max} = 50.6$ MPa

***5–124.** The steel used for the step shaft has an allowable shear stress of $\tau_{allow} = 8$ MPa. If the radius at the transition between the cross sections is $r = 2.25$ mm, determine the maximum torque T that can be applied.

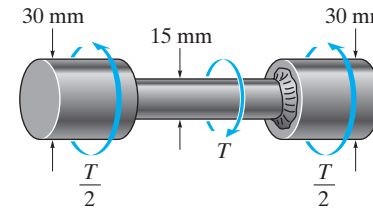

Allowable Shear Stress:

$$\frac{D}{d} = \frac{30}{15} = 2 \qquad \text{and} \qquad \frac{r}{d} = \frac{2.25}{15} = 0.15$$

From the text, $K = 1.30$

$$\tau_{max} = \tau_{allow} = K\frac{Tc}{J}$$

$$8(10^6) = 1.3\left[\frac{\left(\frac{r}{2}\right)(0.0075)}{\frac{\pi}{2}(0.0075^4)}\right]$$

$$T = 8.16 \text{ N}\cdot\text{m} \qquad \textbf{Ans.}$$

5–125. The step shaft is subjected to a torque of 710 lb · in. If the allowable shear stress for the material is $\tau_{allow} = 12$ ksi, determine the smallest radius at the junction between the cross sections that can be used to transmit the torque.

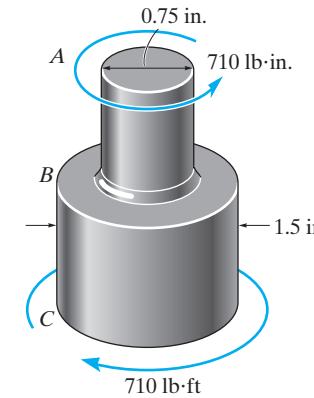

$$\tau_{max} = \tau_{allow} = K\frac{Tc}{J}$$

$$12(10^3) = \frac{K(710)(0.375)}{\frac{\pi}{2}(0.375^4)}$$

$$K = 1.40$$

$$\frac{D}{d} = \frac{1.5}{0.75} = 2$$

From Fig. 5-32,

$$\frac{r}{d} = 0.1; \qquad r = 0.1(0.75) = 0.075 \text{ in.}$$ **Ans.**

Check:

$$\frac{D-d}{2} = \frac{1.5-0.75}{2} = 0.375 > 0.075 \text{ in.}$$ **OK**

Ans:
$r = 0.075$ in.

5–126. A solid shaft has a diameter of 40 mm and length of 1 m. It is made from an elastic-plastic material having a yield stress of $\tau_Y = 100$ MPa. Determine the maximum elastic torque T_Y and the corresponding angle of twist. What is the angle of twist if the torque is increased to $T = 1.2T_Y$? $G = 80$ GPa.

Maximum elastic torque T_Y,

$$\tau_Y = \frac{T_Y c}{J}$$

$$T_Y = \frac{\tau_Y J}{c} = \frac{100(10^6)(\frac{\pi}{2})(0.02^4)}{0.02} = 1256.64 \text{ N} \cdot \text{m} = 1.26 \text{ kN} \cdot \text{m} \qquad \textbf{Ans.}$$

Angle of twist:

$$\gamma_Y = \frac{\tau_Y}{G} = \frac{100(10^6)}{80(10^9)} = 0.00125 \text{ rad}$$

$$\phi = \frac{\gamma_Y}{\rho_Y} L = \frac{0.00125}{0.02}(1) = 0.0625 \text{ rad} = 3.58° \qquad \textbf{Ans.}$$

Also,

$$\phi = \frac{T_Y L}{JG} = \frac{1256.64(1)}{\frac{\pi}{2}(0.02^4)(80)(10^9)} = 0.0625 \text{ rad} = 3.58°$$

From Eq. 5–26 of the text,

$$T = \frac{\pi \tau_Y}{6}(4c^3 - \rho_Y^3); \qquad 1.2(1256.64) = \frac{\pi(100)(10^6)}{6}[4(0.02^3) - \rho_Y^3]$$

$$\rho_Y = 0.01474 \text{ m}$$

$$\phi' = \frac{\gamma_Y}{\rho_Y} L = \frac{0.00125}{0.01474}(1) = 0.0848 \text{ rad} = 4.86° \qquad \textbf{Ans.}$$

Ans:
$T_Y = 1.26 \text{ kN} \cdot \text{m}$, $\phi = 3.58°$, $\phi' = 4.86°$

5–127. Determine the torque needed to twist a short 2-mm-diameter steel wire through several revolutions if it is made from steel assumed to be elastic-plastic and having a yield stress of $\tau_Y = 50$ MPa. Assume that the material becomes fully plastic.

Fully plastic torque is applied. From Eq. 5–27,

$$T_P = \frac{2\pi}{3}\tau_Y c^3 = \frac{2\pi}{3}(50)(10^6)(0.001^3) = 0.105\ \text{N}\cdot\text{m}$$ **Ans.**

Ans:
$T_p = 0.105\ \text{N}\cdot\text{m}$

***5–128.** A bar having a circular cross section of 3 in.-diameter is subjected to a torque of 100 in · kip. If the material is elastic-plastic, with $\tau_Y = 16$ ksi, determine the radius of the elastic core.

Using Eq. 5–26 of the text,

$$T = \frac{\pi \tau_Y}{6}(4c^3 - \rho_Y^3)$$

$$100(10^3) = \frac{\pi(16)(10^3)}{6}(4(1.5^3 - \rho_Y{}^3))$$

$$\rho_Y = 1.16 \text{ in.}$$ **Ans.**

5–129. The solid shaft is made of an elastic-perfectly plastic material as shown. Determine the torque T needed to form an elastic core in the shaft having a radius of $\rho_Y = 20$ mm. If the shaft is 3 m long, through what angle does one end of the shaft twist with respect to the other end? When the torque is removed, determine the residual stress distribution in the shaft and the permanent angle of twist.

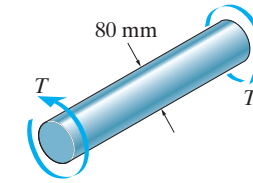

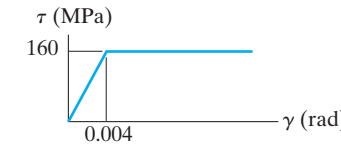

Elastic-Plastic Torque: Applying Eq. 5-26 from the text

$$T = \frac{\pi\,\tau_Y}{6}\left(4c^3 - \rho_Y^3\right)$$

$$= \frac{\pi(160)(10^6)}{6}\left[4\left(0.04^3\right) - 0.02^3\right]$$

$$= 20776.40\ \text{N}\cdot\text{m} = 20.8\ \text{kN}\cdot\text{m} \qquad \textbf{Ans.}$$

Angle of Twist:

$$\phi = \frac{\gamma_Y}{\rho_Y}L = \left(\frac{0.004}{0.02}\right)(3) = 0.600\ \text{rad} = 34.4^\circ \qquad \textbf{Ans.}$$

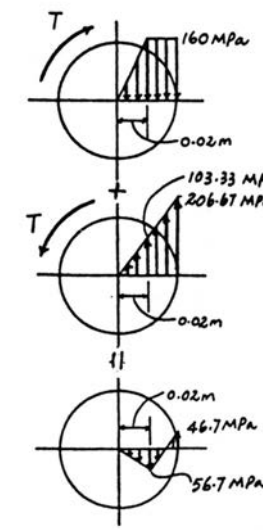

When the reverse $T = 20776.4\ \text{N}\cdot\text{m}$ is applied,

$$G = \frac{160(10^6)}{0.004} = 40\ \text{GPa}$$

$$\phi' = \frac{TL}{JG} = \frac{20776.4(3)}{\frac{\pi}{2}(0.04^4)(40)(10^9)} = 0.3875\ \text{rad}$$

The permanent angle of twist is,

$$\phi_r = \phi - \phi'$$

$$= 0.600 - 0.3875 = 0.2125\ \text{rad} = 12.2^\circ \qquad \textbf{Ans.}$$

Residual Shear Stress:

$$(\tau')_{\rho=c} = \frac{Tc}{J} = \frac{20776.4(0.04)}{\frac{\pi}{2}(0.04^4)} = 206.67\ \text{MPa}$$

$$(\tau')_{\rho=0.02\ \text{m}} = \frac{Tc}{J} = \frac{20776.4(0.02)}{\frac{\pi}{2}(0.04^4)} = 103.33\ \text{MPa}$$

$$(\tau_r)_{\rho=c} = -160 + 206.67 = 46.7\ \text{MPa}$$

$$(\tau_r)_{\rho=0.02\text{m}} = -160 + 103.33 = -56.7\ \text{MPa}$$

Ans:

$T = 20.8\ \text{kN}\cdot\text{m}$, $\phi = 34.4^\circ$, $\phi_r = 12.2^\circ$

5–130. The shaft is subjected to a maximum shear strain of 0.0048 rad. Determine the torque applied to the shaft if the material has strain hardening as shown by the shear stress–strain diagram.

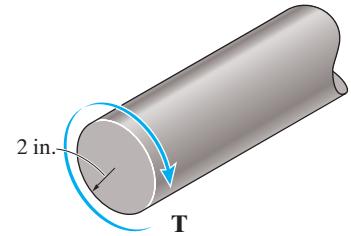

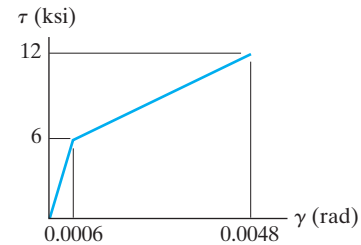

From the shear–strain diagram,

$$\frac{\rho_Y}{0.0006} = \frac{2}{0.0048}; \qquad \rho_Y = 0.25 \text{ in.}$$

From the shear stress–strain diagram,

$$\tau_1 = \frac{6}{0.25}\rho = 24\rho$$

$$\frac{\tau_2 - 6}{\rho - 0.25} = \frac{12 - 6}{2 - 0.25}; \qquad \tau_2 = 3.4286\,\rho + 5.1429$$

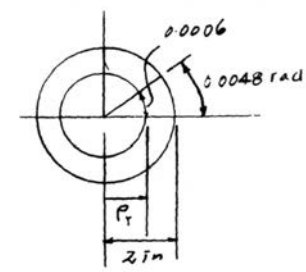

$$T = 2\pi \int_0^c \tau\,\rho^2\,d\rho$$

$$= 2\pi \int_0^{0.25} 24\rho^3\,d\rho + 2\pi \int_{0.25}^{2} (3.4286\rho + 5.1429)\rho^2\,d\rho$$

$$= 2\pi[6\rho^4]\Big|_0^{0.25} + 2\pi\left[\frac{3.4286\rho^4}{4} + \frac{5.1429\rho^3}{3}\right]\Bigg|_{0.25}^{2}$$

$$= 172.30 \text{ kip}\cdot\text{in.} = 14.4 \text{ kip}\cdot\text{ft}$$ **Ans.**

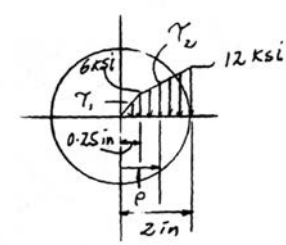

Ans:
$T = 14.4 \text{ kip}\cdot\text{ft}$

5–131. An 80-mm-diameter solid circular shaft is made of an elastic-perfectly plastic material having a yield shear stress of $\tau_Y = 125$ MPa. Determine (a) the maximum elastic torque T_Y; and (b) the plastic torque T_p.

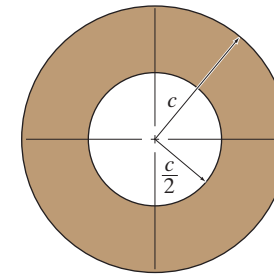

Maximum Elastic Torque.

$$T_Y = \frac{1}{2}\pi c^3 \tau_Y$$

$$= \frac{1}{2}\pi\left(0.04^3\right)\left(125\right)\left(10^6\right)$$

$$= 12\,566.37 \text{ N}\cdot\text{m} = 12.6 \text{ kN}\cdot\text{m}$$ **Ans.**

Plastic Torque.

$$T_p = \frac{2}{3}\pi c^3 \tau_Y$$

$$= \frac{2}{3}\pi\left(0.04^3\right)\left(125\right)\left(10^6\right)$$

$$= 16755.16 \text{ N}\cdot\text{m} = 16.8 \text{ kN}\cdot\text{m}$$ **Ans.**

Ans:
$T_Y = 12.6 \text{ kN}\cdot\text{m}, T_p = 16.8 \text{ kN}\cdot\text{m}$

***5–132.** The hollow shaft has the cross section shown and is made of an elastic-perfectly plastic material having a yield shear stress of T_Y. Determine the ratio of the plastic torque T_p to the maximum elastic torque T_Y.

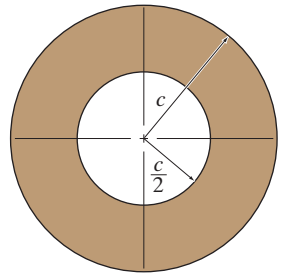

Maximum Elastic Torque. In this case, the torsion formula is still applicable.

$$\tau_Y = \frac{T_Y c}{J}$$

$$T_Y = \frac{J}{c}\tau_Y$$

$$= \frac{\frac{\pi}{2}\left[c^4 - \left(\frac{c}{2}\right)^4\right]\tau_Y}{c}$$

$$= \frac{15}{32}\pi c^3 \tau_Y$$

Plastic Torque. Using the general equation, with $\tau = \tau_Y$,

$$T_P = 2\pi\tau_Y \int_{c/2}^{c} \rho^2 d\rho$$

$$= 2\pi\tau_Y \left(\frac{\rho^3}{3}\right)\Bigg|_{c/2}^{c}$$

$$= \frac{7}{12}\pi c^3 \tau_Y$$

The ratio is

$$\frac{T_P}{T_Y} = \frac{\frac{7}{12}\pi c^3 \tau_Y}{\frac{15}{32}\pi c^3 \tau_Y} = 1.24 \qquad \textbf{Ans.}$$

5–133. If the step shaft is elastic-plastic as shown, determine the largest torque T that can be applied to the shaft. Also, draw the shear-stress distribution over a radial line for each section. Neglect the effect of stress concentration.

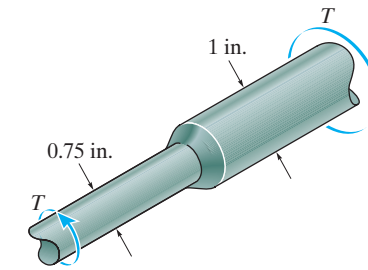

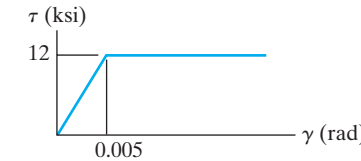

0.75-in.-diameter segment will be fully plastic. From Eq. 5-27 of the text:

$$T = T_p = \frac{2\pi\,\tau_Y}{3}(c^3)$$

$$= \frac{2\pi\,(12)(10^3)}{3}(0.375^3)$$

$$= 1325.36\ \text{lb}\cdot\text{in.} = 110\ \text{lb}\cdot\text{ft}$$ **Ans.**

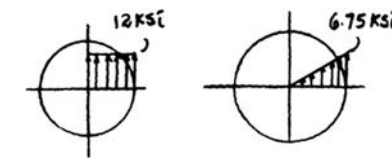

For 1 – in.-diameter segment:

$$\tau_{\max} = \frac{Tc}{J} = \frac{1325.36(0.5)}{\frac{\pi}{2}(0.5)^4}$$

$$= 6.75\ \text{ksi} < \tau_Y$$

Ans:
$T = 110\ \text{lb}\cdot\text{ft}$

5–134. The solid shaft is made from an elastic-plastic material as shown. Determine the torque T needed to form an elastic core in the shaft having a radius of $\rho_Y = 23$ mm. If the shaft is 2 m long, through what angle does one end of the shaft twist with respect to the other end? When the torque is removed, determine the residual stress distribution in the shaft and the permanent angle of twist.

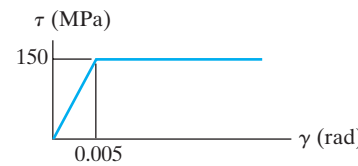

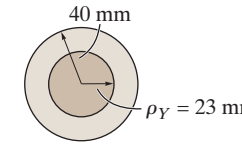

Use Eq. 5–26 of the text,

$$T = \frac{\pi\tau_Y}{6}(4c^3 - \rho_Y^3) = \frac{\pi(150)(10^6)}{6}(4(0.04^3) - 0.023^3)$$

$$= 19\,151 \text{ N}\cdot\text{m} = 19.2 \text{ kN}\cdot\text{m} \qquad \textbf{Ans.}$$

$$\phi = \frac{\gamma L}{\rho} = \frac{\gamma_Y L}{\rho_Y} = \frac{0.005(2)(1000)}{23} = 0.4348 \text{ rad} = 24.9^\circ \qquad \textbf{Ans.}$$

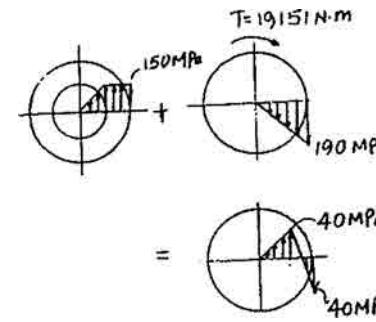

An opposite torque $T = 19\,151$ N · m is applied:

$$\tau_r = \frac{Tc}{J} = \frac{19\,151(0.04)}{\frac{\pi}{2}(0.04^4)} = 190 \text{ MPa}$$

$$G = \frac{150(10^6)}{0.005} = 30 \text{ GPa}$$

$$\phi_P = \frac{TL}{JG} = \frac{19151(2)}{\frac{\pi}{2}(0.04^4)(30)(10^9)} = 0.3175 \text{ rad}$$

$$\phi_r = 0.4348 - 0.3175 = 0.117 \text{ rad} = 6.72^\circ \qquad \textbf{Ans.}$$

Ans:

$T = 19.2$ kN · m, $\phi = 24.9^\circ$, $\phi_r = 6.72^\circ$

5–135. A 1.5-in.-diameter shaft is made from an elastic-plastic material as shown. Determine the radius of its elastic core if it is subjected to a torque of $T = 200\ \text{lb}\cdot\text{ft}$. If the shaft is 10 in. long, determine the angle of twist.

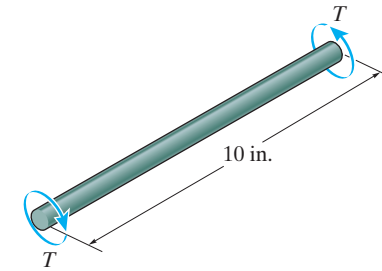

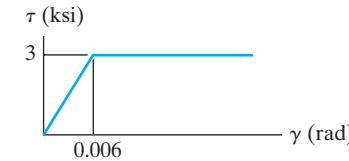

Use Eq. 5–26 from the text:

$$T = \frac{\pi\tau_\gamma}{6}(4\,c^3 - \rho_\gamma^3)$$

$$200(12) = \frac{\pi(3)(10^3)}{6}[4(0.75^3) - \rho_\gamma^3]$$

$\rho_\gamma = 0.542$ in. **Ans.**

$$\phi = \frac{\gamma_Y}{\rho_Y}L = \frac{0.006}{0.542}(10) = 0.111\ \text{rad} = 6.34^\circ$$ **Ans.**

Ans:

$\rho_Y = 0.542$ in., $\phi = 6.34^\circ$

***5–136.** The tubular shaft is made of a strain-hardening material having a $\tau-\gamma$ diagram as shown. Determine the torque T that must be applied to the shaft so that the maximum shear strain is 0.01 rad.

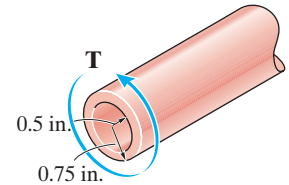

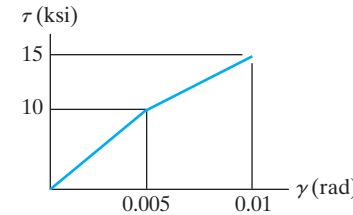

From the shear–strain diagram,

$$\frac{\gamma}{0.5} = \frac{0.01}{0.75}; \qquad \gamma = 0.006667 \text{ rad}$$

From the shear stress–strain diagram,

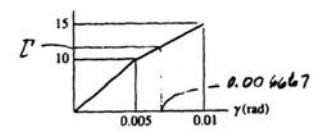

$$\frac{\tau - 10}{0.006667 - 0.005} = \frac{15 - 10}{0.01 - 0.005}; \quad \tau = 11.667 \text{ ksi}$$

$$\frac{\tau - 11.667}{\rho - 0.5} = \frac{15 - 11.667}{0.75 - 0.50}; \qquad \tau = 13.333\,\rho + 5$$

$$T = 2\pi \int_{c_i}^{c_o} \tau\rho^2\, d\rho$$

$$= 2\pi \int_{0.5}^{0.75} (13.333\rho + 5)\,\rho^2\, d\rho$$

$$= 2\pi \int_{0.5}^{0.75} (13.333\rho^3 + 5\rho^2)\, d\rho$$

$$= 2\pi \left[\frac{13.333\rho^4}{4} + \frac{5\rho^3}{3}\right]_{0.5}^{0.75}$$

$$= 8.426 \text{ kip}\cdot\text{in.} = 702 \text{ lb}\cdot\text{ft} \qquad \textbf{Ans.}$$

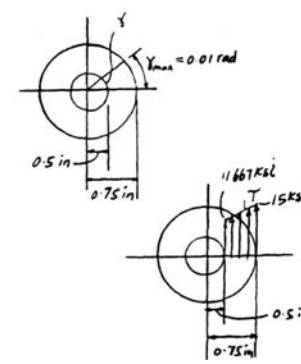

5–137. The shaft is made from a strain-hardening material having a $\tau-\gamma$ diagram as shown. Determine the torque T that must be applied to the shaft in order to create an elastic core in the shaft having a radius of $\rho_c = 0.5$ in.

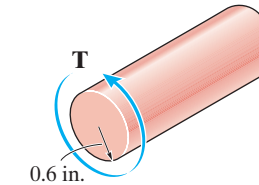

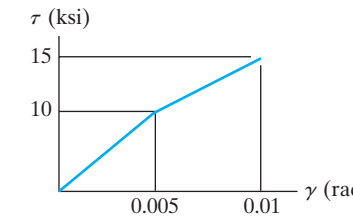

$$\frac{\tau_1}{\gamma} = \frac{10(10^3)}{0.005}$$

$$\tau_1 = 2(10^6)\gamma \qquad (1)$$

$$\frac{\tau_2 - 10(10^3)}{\gamma - 0.005} = \frac{15(10^3) - 10(10^3)}{0.01 - 0.005}$$

$$\tau_2 = 1(10^6)\gamma + 5(10^3) \qquad (2)$$

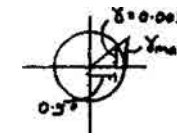

$$\gamma_{max} = \frac{0.6}{0.5}(0.005) = 0.006$$

$$\gamma = \frac{\rho}{c}\gamma_{max} = \frac{\rho}{0.6}(0.006) = 0.01\rho$$

Substituting γ into Eqs. (1) and (2) yields:

$$\tau_1 = 20(10^3)\rho$$

$$\tau_2 = 10(10^3)\rho + 5(10^3)$$

$$T = 2\pi\int_0^c \tau\rho^2\,d\rho$$

$$= 2\pi\int_0^{0.5} 20(10^3)\rho^3\,d\rho + 2\pi\int_{0.5}^{0.6}[10(10^3)\rho + 5(10^3)]\rho^2\,d\rho$$

$$= 3970\ \text{lb}\cdot\text{in.} = 331\ \text{lb}\cdot\text{ft} \qquad \textbf{Ans.}$$

Ans:
$T = 331\ \text{lb}\cdot\text{ft}$

5–138. The tube is made of elastic-perfectly plastic material, which has the $\tau-\gamma$ diagram shown. Determine the torque T that just causes the inner surface of the shaft to yield. Also, find the residual shear-stress distribution in the shaft when the torque is removed.

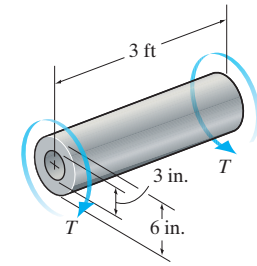

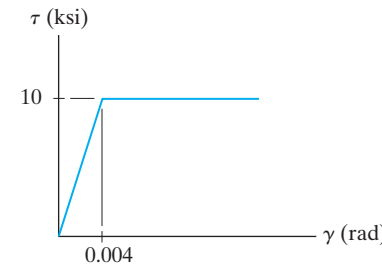

Plastic Torque. When the inner surface of the shaft is about to yield, the shaft is about to become fully plastic.

$$T = 2\pi \int \tau\rho^2 d\rho$$

$$= 2\pi\tau_Y \int_{1.5\text{ in.}}^{3\text{ in.}} \rho^2 d\rho$$

$$= 2\pi(10)\left(\frac{\rho^3}{3}\right)\Bigg|_{1.5\text{ in.}}^{3\text{ in.}}$$

$$= 494.80\text{ kip}\cdot\text{in.} = 41.2\text{ kip}\cdot\text{ft} \qquad \textbf{Ans.}$$

Angle of Twist.

$$\phi = \frac{\gamma_Y}{\rho_Y} L = \frac{0.004}{1.5}(3)(12) = 0.096\text{ rad}$$

The process of removing torque **T** is equivalent to the application of T', which is equal magnitude but opposite in sense to that of **T**. This process occurs in a linear manner.

$$\tau'_{\rho=c_o} = \frac{T'c_o}{J} = \frac{494.80(3)}{\frac{\pi}{2}\left(3^4 - 1.5^4\right)} = 12.44\text{ ksi}$$

$$\tau'_{\rho=c_i} = \frac{T'c_i}{J} = \frac{494.80(1.5)}{\frac{\pi}{2}\left(3^4 - 1.5^4\right)} = 6.222\text{ ksi}$$

5–138. Continued

And the residual stresses are

$$(\tau_r)_{\rho=c_o} = \tau_{\rho=c} + \tau'_{\rho=c} = -10 + 12.44 = 2.44 \text{ ksi} \quad \textbf{Ans.}$$

$$(\tau_r)_{\rho=c_i} = \tau_{\rho=c_i} + \tau'_{\rho=c_i} = -10 + 6.22 = -3.78 \text{ ksi} \quad \textbf{Ans.}$$

The shear stress distribution due to **T** and T' and the residual stress distribution are shown in Fig. *a*.

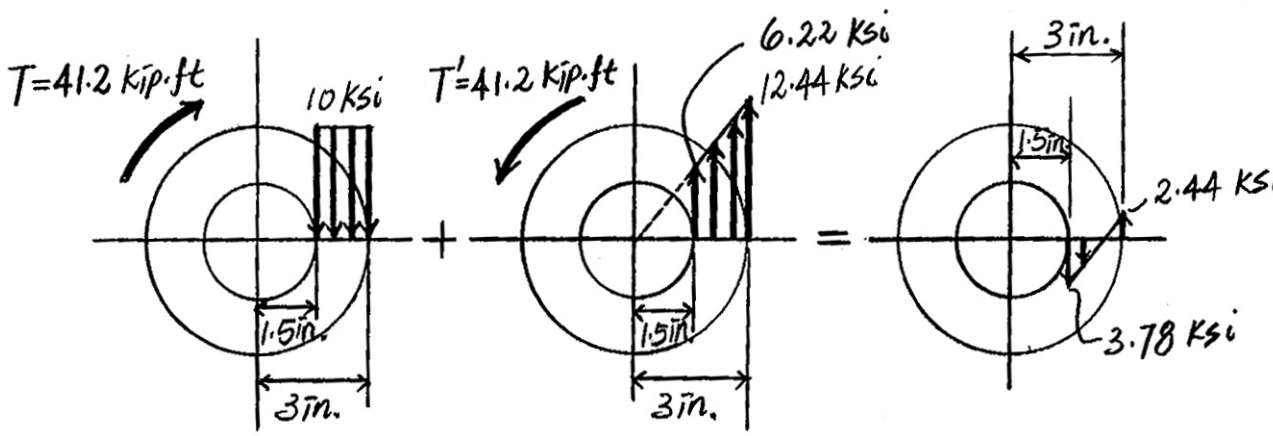

(a)

Ans:

$T = 41.2 \text{ kip} \cdot \text{ft}$, $(\tau_r)_{\rho=c_o} = 2.44$ ksi, $(\tau_r)_{\rho=c_i} = -3.78$ ksi

5–139. The shear stress–strain diagram for a solid 50-mm-diameter shaft can be approximated as shown in the figure. Determine the torque required to cause a maximum shear stress in the shaft of 125 MPa. If the shaft is 3 m long, what is the corresponding angle of twist?

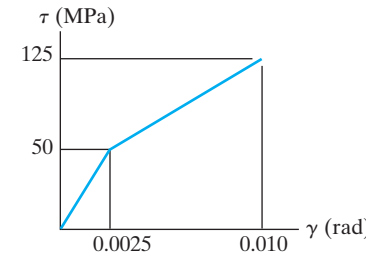

$$\gamma = \frac{\rho}{c}\gamma_{max}$$

$$\gamma_{max} = 0.01$$

When $\gamma = 0.0025$

$$\rho = \frac{c\gamma}{\gamma_{max}}$$

$$= \frac{0.025(0.0025)}{0.010} = 0.00625$$

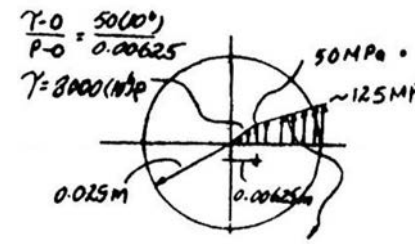

$$\frac{\tau - 0}{\rho - 0} = \frac{50(10^6)}{0.00625}$$

$$\tau = 8000(10^6)(\rho)$$

$$\frac{\tau - 50(10^6)}{\rho - 0.00625} = \frac{125(10^6) - 50(10^6)}{0.025 - 0.00625}$$

$$\tau = 4000(10^6)(\rho) + 25(10^6)$$

$$T = 2\pi\int_0^c \tau\rho^2\,d\rho$$

$$= 2\pi\int_0^{0.00625} 8000(10^6)\rho^3\,d\rho$$

$$+ 2\pi\int_{0.00625}^{0.025}[4000(10^6)\rho + 25(10^6)]\rho^2\,d\rho$$

$$T = 3269\ \text{N}\cdot\text{m} = 3.27\ \text{kN}\cdot\text{m}$$ **Ans.**

$$\phi = \frac{\gamma_{max}}{c}L = \frac{0.01}{0.025}(3)$$

$$= 1.20\ \text{rad} = 68.8^\circ$$ **Ans.**

Ans:
$T = 3.27\ \text{kN}\cdot\text{m}$, $\phi = 68.8^\circ$

***5–140.** The 2-m-long tube is made of an elastic-perfectly plastic material as shown. Determine the applied torque T that subjects the material at the tube's outer edge to a shear strain of $\gamma_{max} = 0.006$ rad. What would be the permanent angle of twist of the tube when this torque is removed? Sketch the residual stress distribution in the tube.

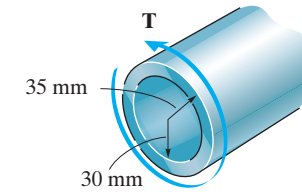

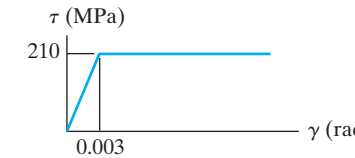

Plastic Torque: The tube is fully plastic if $\gamma_i \geq \gamma_r = 0.003$ rad.

$$\frac{\gamma}{0.03} = \frac{0.006}{0.035}; \qquad \gamma = 0.005143 \text{ rad}$$

Therefore the tube is fully plastic.

$$T_P = 2\pi \int_{c_i}^{c_o} \tau_\gamma \rho^2 \, d\rho$$

$$= \frac{2\pi \tau_Y}{3}\left(c_o^3 - c_i^3\right)$$

$$= \frac{2\pi(210)(10^6)}{3}\left(0.035^3 - 0.03^3\right)$$

$$= 6982.19 \text{ N}\cdot\text{m} = 6.98 \text{ kN}\cdot\text{m} \qquad \textbf{Ans.}$$

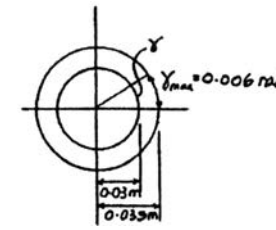

Angle of Twist:

$$\phi_P = \frac{\gamma_{max}}{c_o} L = \left(\frac{0.006}{0.035}\right)(2) = 0.34286 \text{ rad}$$

When a reverse torque of $T_P = 6982.19$ N · m is applied,

$$G = \frac{\tau_Y}{\gamma_Y} = \frac{210(10^6)}{0.003} = 70 \text{ GPa}$$

$$\phi'_P = \frac{T_P L}{JG} = \frac{6982.19(2)}{\frac{\pi}{2}(0.035^4 - 0.03^4)(70)(10^9)} = 0.18389 \text{ rad}$$

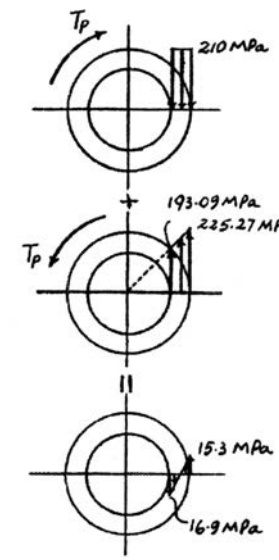

Permanent angle of twist,

$$\phi_r = \phi_P - \phi'_P$$

$$= 0.34286 - 0.18389 = 0.1590 \text{ rad} = 9.11° \qquad \textbf{Ans.}$$

Residual Shear Stress:

$$\tau'_{P_o} = \frac{T_P c}{J} = \frac{6982.19(0.035)}{\frac{\pi}{2}(0.035^4 - 0.03^4)} = 225.27 \text{ MPa}$$

$$\tau'_{P_i} = \frac{T_P \rho}{J} = \frac{6982.19(0.03)}{\frac{\pi}{2}(0.035^4 - 0.03^4)} = 193.09 \text{ MPa}$$

$$(\tau_P)_o = -\tau_\gamma + \tau'_{P_o} = -210 + 225.27 = 15.3 \text{ MPa}$$

$$(\tau_P)_i = -\tau_\gamma + \tau'_{P_i} = -210 + 193.09 = -16.9 \text{ MPa}$$

5–141. A steel alloy core is bonded firmly to the copper alloy tube to form the shaft shown. If the materials have the $\tau-\gamma$ diagrams shown, determine the torque resisted by the core and the tube.

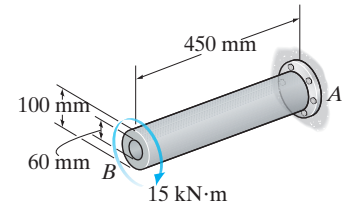

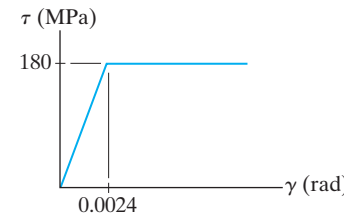

Steel Alloy

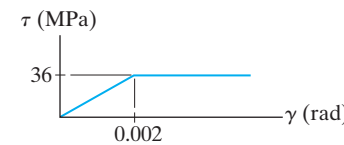

Copper Alloy

Equation of Equilibrium. Referring to the free-body diagram of the cut part of the assembly shown in Fig. *a*,

$$\Sigma M_x = 0; \quad T_c + T_t - 15\left(10^3\right) = 0 \qquad \textbf{(1)}$$

Elastic Analysis. The shear modulus of steel and copper are $G_{st} = \dfrac{180\left(10^6\right)}{0.0024} = 75\text{ GPa}$ and $G_\infty = \dfrac{36\left(10^6\right)}{0.002} = 18\text{ GPa}$. Compatibility requires that

$$\phi_C = \phi_t$$

$$\frac{T_c L}{J_c G_{st}} = \frac{T_t L}{J_t G_\infty}$$

$$\frac{T_c}{\frac{\pi}{2}\left(0.03^4\right)(75)\left(10^9\right)} = \frac{T_t}{\frac{\pi}{2}\left(0.05^4 - 0.03^4\right)(18)\left(10^9\right)}$$

$$T_c = 0.6204 T_t \qquad \textbf{(2)}$$

Solving Eqs. (1) and (2),

$$T_t = 9256.95\text{ N}\cdot\text{m} \qquad\qquad T_c = 5743.05\text{ N}\cdot\text{m}$$

The maximum elastic torque and plastic torque of the core and the tube are

$$(T_Y)_c = \frac{1}{2}\pi c^3 (\tau_Y)_{st} = \frac{1}{2}\pi\left(0.03^3\right)(180)\left(10^6\right) = 7634.07\text{ N}\cdot\text{m}$$

$$(T_P)_c = \frac{2}{3}\pi c^3 (\tau_Y)_{st} = \frac{2}{3}\pi\left(0.03^3\right)(180)\left(10^6\right) = 10\,178.76\text{ N}\cdot\text{m}$$

and

$$(T_Y)_t = \frac{J}{c}\tau_Y = \left[\frac{\frac{\pi}{2}\left(0.05^4 - 0.03^4\right)}{0.05}\right]\left[(36)\left(10^6\right)\right] = 6152.49\text{ N}\cdot\text{m}$$

$$(T_P)_t = 2\pi(\tau_Y)_\infty \int_{c_i}^{c_o} \rho^2 d\rho = 2\pi(36)\left(10^6\right)\left(\frac{\rho^3}{3}\right)\Bigg|_{0.03\text{ m}}^{0.05\text{ m}} = 7389.03\text{ N}\cdot\text{m}$$

Since $T_t > (T_Y)_t$, the results obtained using the elastic analysis are not valid.

Plastic Analysis. Assuming that the tube is fully plastic,

$$T_t = (T_P)_t = 7389.03 \text{ N} \cdot \text{m} = 7.39 \text{ kN} \cdot \text{m} \qquad \textbf{Ans.}$$

Substituting this result into Eq. (1),

$$T_c = 7610.97 \text{ N} \cdot \text{m} = 7.61 \text{ kN} \cdot \text{m} \qquad \textbf{Ans.}$$

Since $T_c < (T_Y)_c$, the core is still linearly elastic. Thus,

$$\phi_t = \phi_{tc} = \frac{T_c L}{J_c G_{st}} = \frac{7610.97(0.45)}{\frac{\pi}{2}(0.03^4)(75)(10^9)} = 0.03589 \text{ rad}$$

$$\phi_t = \frac{\gamma_i}{c_i} L; \qquad 0.3589 = \frac{\gamma_i}{0.03}(0.45)$$

$$\gamma_i = 0.002393 \text{ rad}$$

Since $\gamma_i > (\gamma_Y)_\infty = 0.002$ rad, the tube is indeed fully plastic.

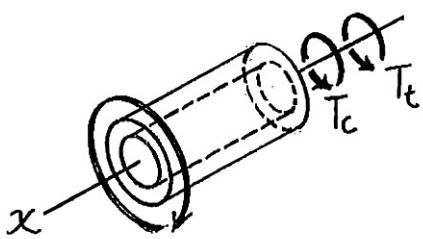

(a)

Ans:
$T_t = 7.39 \text{ kN} \cdot \text{m}, T_c = 7.61 \text{ kN} \cdot \text{m}$

5–142. The 2-m-long tube is made from an elastic-plastic material as shown. Determine the applied torque T, which subjects the material of the tube's outer edge to a shearing strain, of $\gamma_{max} = 0.008$ rad. What would be the permanent angle of twist of the tube when the torque is removed? Sketch the residual stress distribution of the tube.

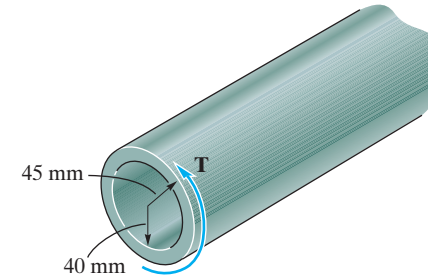

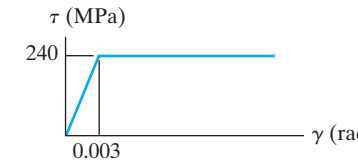

$$\phi = \frac{\gamma_{max} L}{c} = \frac{0.008(2)}{0.045}$$

$$\phi = 0.3556 \text{ rad}$$

However,

$$\phi = \frac{\gamma_Y}{\rho_Y} L$$

$$0.3556 = \frac{0.003}{\rho_Y}(2)$$

$$\rho_Y = 0.016875 \text{ m} < 0.04 \text{ m}$$

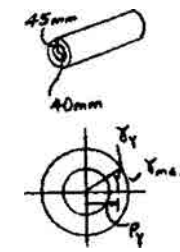

Therefore the tube is fully plastic.

Also,

$$\frac{0.008}{45} = \frac{r}{40}$$

$$r = 0.00711 > 0.003$$

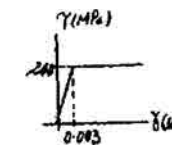

Again, the tube is fully plastic,

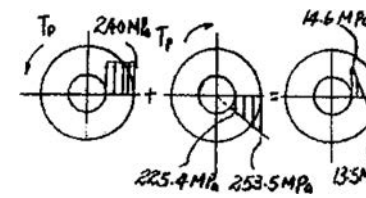

$$T_P = 2\pi \int_{c_i}^{c_o} \tau_Y \rho^2 \, d\rho$$

$$= \frac{2\pi\tau_Y}{3}(c_o^3 - c_i^3)$$

$$= \frac{2\pi(240)(10^6)}{3}(0.045^3 - 0.04^3)$$

$$= 13634.5 \text{ N}\cdot\text{m} = 13.6 \text{ kN}\cdot\text{m}$$ **Ans.**

The torque is removed and the opposite torque of $T_P = 13634.5 \text{ N}\cdot\text{m}$ is applied,

$$\phi' = \frac{T_P L}{JG} \qquad G = \frac{240(10^6)}{0.003} = 80 \text{ GPa}$$

$$= \frac{13634.5(2)}{\frac{\pi}{2}(0.045^4 - 0.04^4)(80)(10^6)}$$

$$= 0.14085 \text{ rad}$$

5–142. Continued

$$\phi_r = \phi - \phi' = 0.35555 - 0.14085$$

$$= 0.215 \text{ rad} = 12.3^\circ$$ **Ans.**

$$\tau'_{p_o} = \frac{T_P c}{J} = \frac{13634.5(0.045)}{\frac{\pi}{2}(0.045^6 - 0.04^4)} = 253.5 \text{ MPa}$$

$$\tau'_{p_i} = \frac{0.04}{0.045}(253.5) = 225.4 \text{ MPa}$$

Ans:
$T_p = 13.6 \text{ kN} \cdot \text{m}, \phi_r = 12.3^\circ$

5–143. The shaft is made of A992 steel and has an allowable shear stress of $\tau_{\text{allow}} = 75$ MPa. When the shaft is rotating at 300 rpm, the motor supplies 8 kW of power, while gears A and B withdraw 5 kW and 3 kW, respectively. Determine the required minimum diameter of the shaft to the nearest millimeter. Also, find the rotation of gear A relative to C.

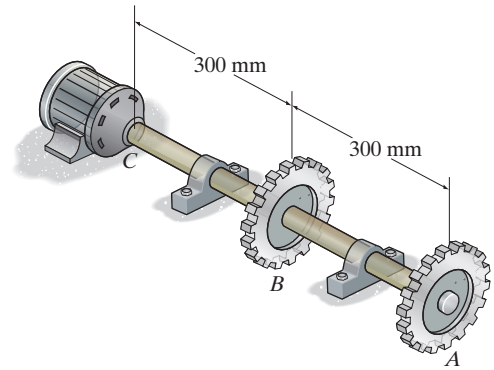

Applied Torque: The angular velocity of the shaft is

$$\omega = \left(300\frac{\text{rev}}{\text{min}}\right)\left(\frac{1\text{ min}}{60\text{ s}}\right)\left(\frac{2\pi\text{rad}}{1\text{ rev}}\right) = 10\pi\text{ rad/s}$$

Thus, the torque at C and gear A are

$$T_C = \frac{P_C}{\omega} = \frac{8(10^3)}{10\pi} = 254.65\text{ N}\cdot\text{m}$$

$$T_A = \frac{P_A}{\omega} = \frac{5(10^3)}{10\pi} = 159.15\text{ N}\cdot\text{m}$$

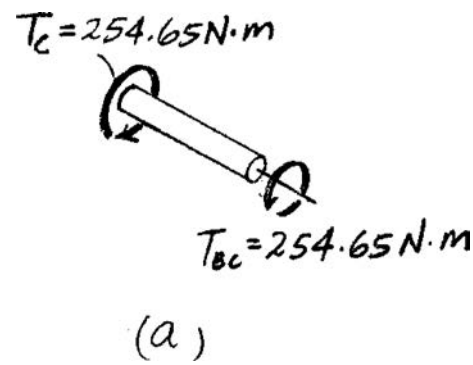

Internal Loading: The internal torque developed in segment BC and AB of the shaft are shown in Figs. a and b, respectively.

Allowable Shear Stress: By inspection, segment BC is critical.

$$\tau_{\text{allow}} = \frac{T_{BC}c}{J}; \qquad 75(10^6) = \frac{254.65(\frac{d}{2})}{\frac{\pi}{2}(\frac{d}{2})^4}$$

$$d = 0.02586\text{ m}$$

Use $\quad d = 26$ mm **Ans.**

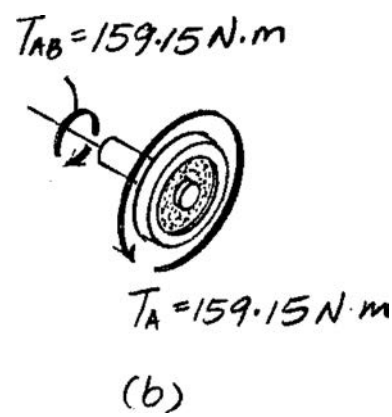

Angle of Twist: Using $d = 26$ mm,

$$\phi_{A/C} = \Sigma\frac{T_iL_i}{J_iG_i} = \frac{T_{AB}L_{AB}}{JG} + \frac{T_{BC}L_{BC}}{JG}$$

$$= \frac{0.3}{\frac{\pi}{2}(0.013^4)(75)(10^9)}(159.15 + 254.65)$$

$$= 0.03689\text{ rad} = 2.11°$$ **Ans.**

Ans:
Use $d = 26$ mm, $\phi_{A/C} = 2.11°$

***5–144.** The shaft is made of A992 steel and has an allowable shear stress of $\tau_{\text{allow}} = 75$ MPa. When the shaft is rotating at 300 rpm, the motor supplies 8 kW of power, while gears A and B withdraw 5 kW and 3 kW, respectively. If the angle of twist of gear A relative to C is not allowed to exceed 0.03 rad, determine the required minimum diameter of the shaft to the nearest millimeter.

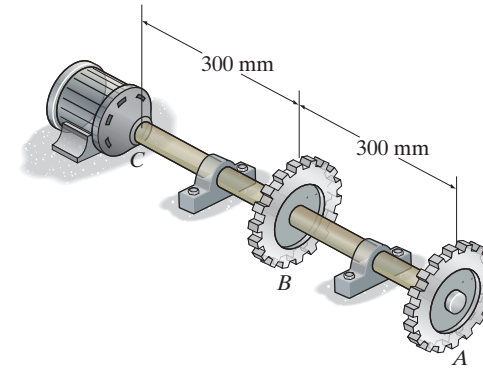

Applied Torque: The angular velocity of the shaft is

$$\omega = \left(300\frac{\text{rev}}{\text{min}}\right)\left(\frac{1\text{ min}}{60\text{ s}}\right)\left(\frac{2\pi\text{rad}}{1\text{ rev}}\right) = 10\pi\text{ rad/s}$$

Thus, the torque at C and gear A are

$$T_C = \frac{P_C}{\omega} = \frac{8(10^3)}{10\pi} = 254.65\text{ N}\cdot\text{m}$$

$$T_A = \frac{P_A}{\omega} = \frac{5(10^3)}{10\pi} = 159.15\text{ N}\cdot\text{m}$$

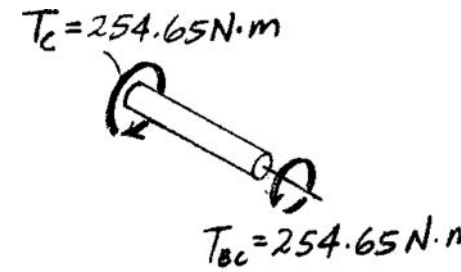

(a)

Internal Loading: The internal torque developed in segment BC and AB of the shaft are shown in Figs. a and b, respectively.

Allowable Shear Stress: By inspection, segment BC is critical.

$$\tau_{\text{allow}} = \frac{T_{BC}\,c}{J}; \qquad 75(10^3) = \frac{254.65(\frac{d}{2})}{\frac{\pi}{2}(\frac{d}{2})^4}$$

$$d = 0.02586$$

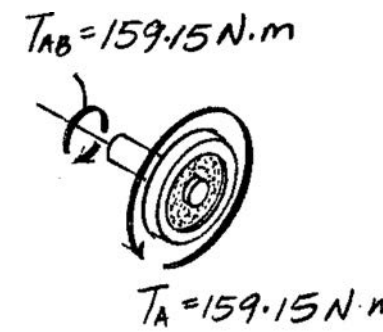

(b)

Angle of Twist:

$$\phi_{A/C} = \Sigma\frac{T_i L_i}{J_i G_i} = \frac{T_{AB}\,L_{AB}}{JG} + \frac{T_{BC}\,L_{BC}}{JG}$$

$$0.03 = \frac{0.3}{\frac{\pi}{2}(\frac{d}{2})^4(75)(10^9)}(159.15 + 254.65)$$

$$d = 0.02738\text{ m} = 28\text{ mm (controls)}$$ **Ans.**

5–145. The A-36 steel circular tube is subjected to a torque of 10 kN · m. Determine the shear stress at the mean radius $\rho = 60$ mm and compute the angle of twist of the tube if it is 4 m long and fixed at its far end. Solve the problem using Eqs. 5–7 and 5–15 and by using Eqs. 5–18 and 5–20.

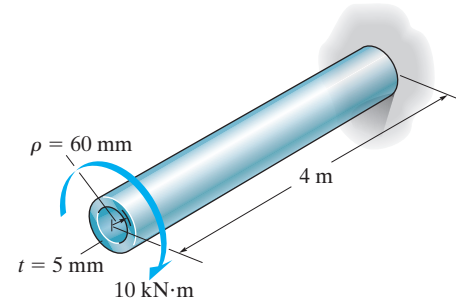

We show that two different methods give similar results:

Shear Stress:

Applying Eq. 5-7,

$$r_o = 0.06 + \frac{0.005}{2} = 0.0625 \text{ m} \qquad r_i = 0.06 - \frac{0.005}{2} = 0.0575 \text{ m}$$

$$\tau_{\rho=0.06\text{ m}} = \frac{T\rho}{J} = \frac{10(10^3)(0.06)}{\frac{\pi}{2}(0.0625^4 - 0.0575^4)} = 88.27 \text{ MPa}$$

Applying Eq. 5-18,

$$\tau_{\text{avg}} = \frac{T}{2\,t\,A_m} = \frac{10(10^3)}{2(0.005)(\pi)(0.06^2)} = 88.42 \text{ MPa}$$

Angle of Twist:

Applying Eq. 5-15,

$$\phi = \frac{TL}{JG}$$

$$= \frac{10(10^3)(4)}{\frac{\pi}{2}(0.0625^4 - 0.0575^4)(75.0)(10^9)}$$

$$= 0.0785 \text{ rad} = 4.495°$$

Applying Eq. 5-20,

$$\phi = \frac{TL}{4A_m^2 G}\int \frac{ds}{t}$$

$$= \frac{TL}{4A_m^2 G\,t}\int ds \qquad \text{Where} \qquad \int ds = 2\pi\rho$$

$$= \frac{2\pi TL\rho}{4A_m^2 G\,t}$$

$$= \frac{2\pi(10)(10^3)(4)(0.06)}{4[(\pi)(0.06^2)]^2(75.0)(10^9)(0.005)}$$

$$= 0.0786 \text{ rad} = 4.503°$$

Rounding to three significant figures, we find

$\tau = 88.3$ MPa **Ans.**

$\phi = 4.50°$ **Ans.**

Ans:
$\tau = 88.3$ MPa, $\phi = 4.50°$

5–146. A portion of an airplane fuselage can be approximated by the cross section shown. If the thickness of its 2014-T6-aluminum skin is 10 mm, determine the maximum wing torque **T** that can be applied if $\tau_{\text{allow}} = 4$ MPa. Also, in a 4-m-long section, determine the angle of twist.

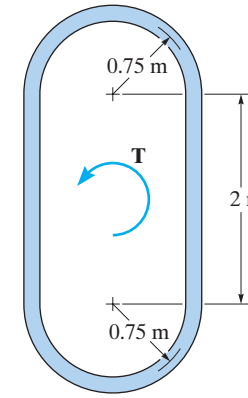

$$\tau_{\text{avg}} = \frac{T}{2tA_m}$$

$$4(10^6) = \frac{T}{2(0.01)[(\pi)(0.75)^2 + 2(1.5)]}$$

$$T = 381.37(10^3) = 381 \text{ kN} \cdot \text{m}$$ **Ans.**

$$\phi = \frac{TL}{4A_m^2 G}\int \frac{ds}{t}$$

$$\phi = \frac{381.37(10^3)(4)}{4[(\pi(0.75)^2 + 2(1.5))^2 27(10^9)]}\left[\frac{4 + 2\pi(0.75)}{0.010}\right]$$

$$\phi = 0.542(10^{-3}) \text{ rad} = 0.0310°$$ **Ans.**

Ans:
$T = 381 \text{ kN} \cdot \text{m}$, $\phi = 0.0310°$

5–147. The material of which each of three shafts is made has a yield stress of τ_Y and a shear modulus of G. Determine which shaft geometry will resist the largest torque without yielding. What percentage of this torque can be carried by the other two shafts? Assume that each shaft is made of the same amount of material and that it has the same cross sectional area A.

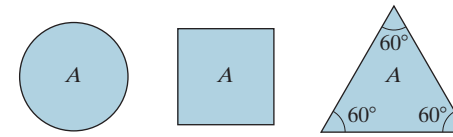

For circular shaft:

$$A = \pi c^2; \qquad c = \left(\frac{A}{\pi}\right)^{\frac{1}{2}}$$

$$\tau_{\max} = \frac{T\,c}{J}, \qquad \tau_Y = \frac{T\,c}{\frac{a}{2}c^4}$$

$$T = \frac{\pi c^3}{2}\tau_Y = \frac{\pi\left(\frac{A}{\pi}\right)^{\frac{3}{2}}}{2}\tau_Y$$

$$T_{cir} = 0.2821\,A^{\frac{1}{2}}\,\tau_Y$$

For the square shaft:

$$A = a^2; \qquad a = A^{\frac{1}{2}}$$

$$\tau_{\max} = \frac{4.81\,T}{a^3}; \qquad \tau_Y = \frac{4.81\,T}{A^{\frac{3}{2}}}$$

$$T = 0.2079\,A^{\frac{3}{2}}\,\tau_Y$$

For the triangular shaft:

$$A = \frac{1}{2}(a)(a\sin 60°); \qquad a = 1.5197A^{\frac{1}{2}}$$

$$\tau_{\max} = \frac{20\,T}{a^3}; \qquad \tau_Y = \frac{20\,T}{(1.5197)^3 A^{\frac{3}{2}}}$$

$$T = 0.1755A^{\frac{3}{2}}\,\tau_Y$$

The circular shaft will carry the largest torque **Ans.**

For the square shaft:

$$\% = \frac{0.2079}{0.2821}(100\%) = 73.7\%$$ **Ans.**

For the triangular shaft:

$$\% = \frac{0.1755}{0.2821}(100\%) = 62.2\ \%$$ **Ans.**

Ans:
The circular shaft will resist the largest torque.
For the square shaft: 73.7%,
For the triangular shaft: 62.2%

***5–148.** Segments AB and BC of the assembly are made from 6061-T6 aluminum and A992 steel, respectively. If couple forces $P = 3$ kip are applied to the lever arm, determine the maximum shear stress developed in each segment. The assembly is fixed at A and C.

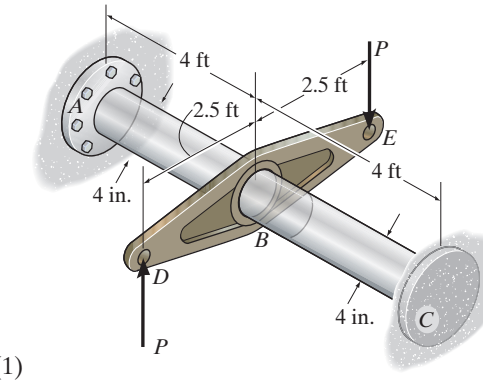

Equilibrium: Referring to the free-body diagram of the assembly shown in Fig. *a*,

$$\Sigma M_x = 0; \qquad T_A + T_C - 3(5) = 0 \qquad (1)$$

Compatibility Equation: It is required that

$$\phi_{B/A} = \phi_{B/C}$$

$$\frac{T_A L_{AB}}{JG_{al}} = \frac{T_C L_{BC}}{JG_{st}}$$

$$\frac{T_A L}{J(3.7)(10^3)} = \frac{T_C L}{J(11)(10^3)}$$

$$T_A = 0.3364\, T_C \qquad (2)$$

Solving Eqs. (1) and (2),

$$T_C = 11.224 \text{ kip} \cdot \text{ft} \qquad T_A = 3.775 \text{ kip} \cdot \text{ft}$$

Maximum Shear Stress:

$$(\tau_{\max})_{AB} = \frac{T_A c}{J} = \frac{3.775(12)(2)}{\frac{\pi}{2}(2^4)} = 3.60 \text{ ksi} \qquad \textbf{Ans.}$$

$$(\tau_{\max})_{BC} = \frac{T_C c}{J} = \frac{11.224(12)(2)}{\frac{\pi}{2}(2^4)} = 10.7 \text{ ksi} \qquad \textbf{Ans.}$$

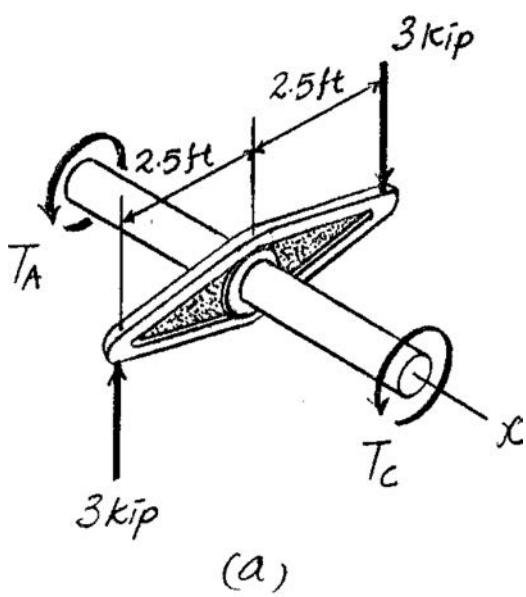

5–149. Segments AB and BC of the assembly are made from 6061-T6 aluminum and A992 steel, respectively. If the allowable shear stress for the aluminum is $(\tau_{\text{allow}})_{\text{al}} = 12$ ksi and for the steel $(\tau_{\text{allow}})_{\text{st}} = 10$ ksi, determine the maximum allowable couple forces P that can be applied to the lever arm. The assembly is fixed at A and C.

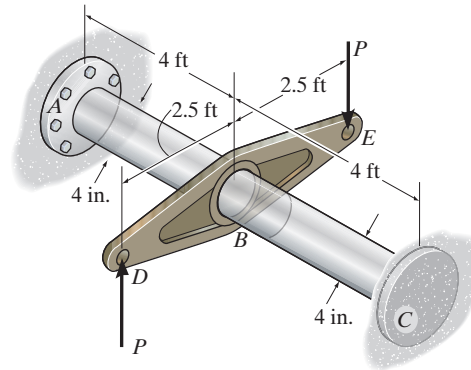

Equilibrium: Referring to the free-body diagram of the assembly shown in Fig. *a*,

$$\Sigma M_x = 0; \qquad T_A + T_C - P(5) = 0 \qquad (1)$$

Compatibility Equation: It is required that

$$\phi_{B/A} = \phi_{B/C}$$

$$\frac{T_A L_{AB}}{JG_{\text{al}}} = \frac{T_C L_{BC}}{JG_{\text{st}}}$$

$$\frac{T_A L}{J(3.7)(10^3)} = \frac{T_C L}{J(11)(10^3)}$$

$$T_A = 0.3364\, T_C \qquad (2)$$

Solving Eqs. (1) and (2),

$$T_C = 3.7415P \qquad\qquad T_A = 1.259P$$

Allowable Shear Stress:

$$(\tau_{\text{allow}})_{AB} = \frac{T_A c}{J}; \qquad 12 = \frac{1.259P(12)(2)}{\frac{\pi}{2}(2^4)}$$

$$P = 9.98 \text{ kip}$$

$$(\tau_{\text{allow}})_{BC} = \frac{T_C c}{J}; \qquad 10 = \frac{3.7415P(12)(2)}{\frac{\pi}{2}(2^4)}$$

$$P = 2.80 \text{ kip (controls)} \qquad \textbf{Ans.}$$

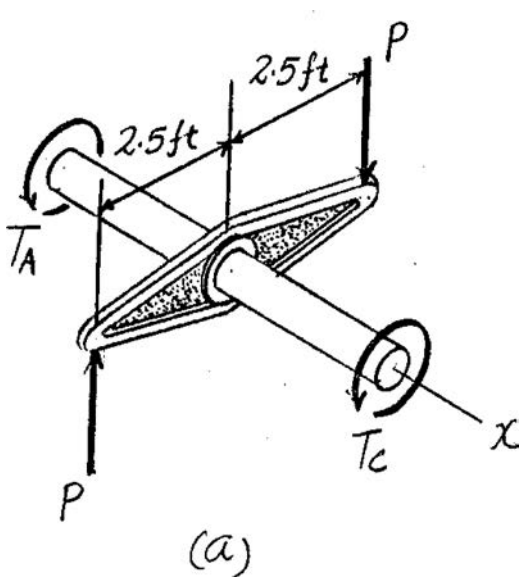

Ans:
$P = 2.80$ kip

5–150. The tapered shaft is made from 2014-T6 aluminum alloy, and has a radius which can be described by the function $r = 0.02(1 + x^{3/2})$ m, where x is in meters. Determine the angle of twist of its end A if it is subjected to a torque of 450 N · m.

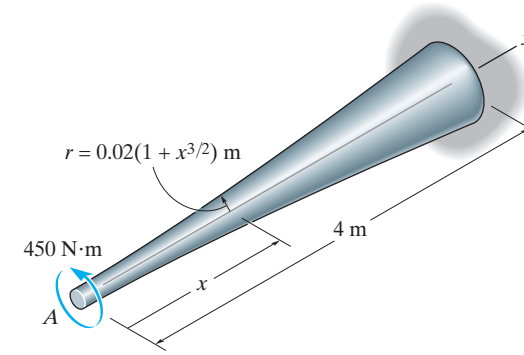

$T = 450 \text{ N} \cdot \text{m}$

$$\phi_A = \int \frac{T\,dx}{JG} = \int_0^4 \frac{450\,dx}{\frac{\pi}{2}(0.02)^4(1 + x^{\frac{3}{2}})^4\,(27)(10^9)} = 0.066315 \int_0^4 \frac{dx}{(1 + x^{\frac{3}{2}})^4}$$

Evaluating the integral numerically, we have

$\phi_A = 0.066315\,[0.4179]$ rad

$= 0.0277 \text{ rad} = 1.59°$ **Ans.**

Ans:

$\phi_A = 1.59°$

5–151. The 60-mm-diameter shaft rotates at 300 rev/min. This motion is caused by the unequal belt tensions on the pulley of 800 N and 450 N. Determine the power transmitted and the maximum shear stress developed in the shaft.

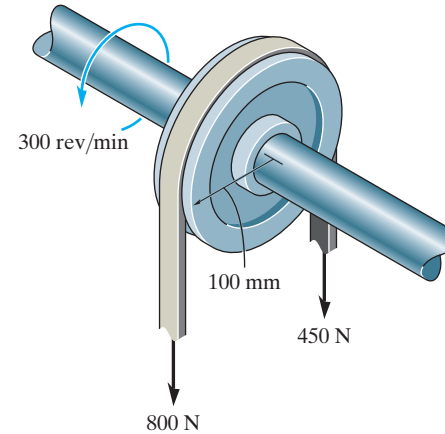

$$\omega = 300\frac{\text{rev}}{\text{min}}\left[\frac{2\pi \text{ rad}}{1 \text{ rev}}\right]\frac{1 \text{ min}}{60 \text{ s}} = 10\,\pi \text{ rad/s}$$

$$T + 450(0.1) - 800(0.1) = 0$$

$$T = 35.0 \text{ N}\cdot\text{m}$$

$$P = T\omega = 35.0(10\pi) = 1100 \text{ W} = 1.10 \text{ kW}$$ **Ans.**

$$\tau_{\max} = \frac{Tc}{J} = \frac{35.0(0.03)}{\frac{\pi}{2}(0.03^4)} = 825 \text{ kPa}$$ **Ans.**

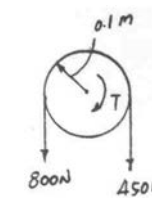

Ans:

$P = 1.10$ kW, $\tau_{\max} = 825$ kPa

6–1. The load binder is used to support a load. If the force applied to the handle is 50 lb, determine the tensions T_1 and T_2 in each end of the chain and then draw the shear and moment diagrams for the arm ABC.

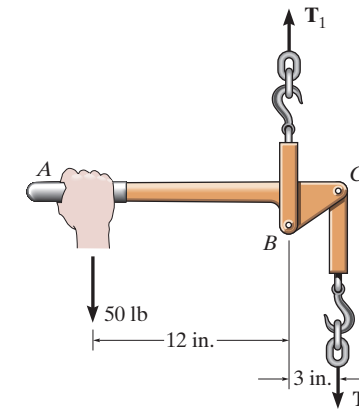

$\circlearrowleft + \Sigma M_C = 0;$ $\quad 50(15) - T_1(3) = 0$

$T_1 = 250 \text{ lb}$ **Ans.**

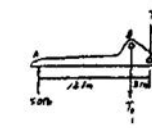

$+\downarrow \Sigma F_y = 0;$ $\quad 50 - 250 + T_2 = 0$

$T_2 = 200 \text{ lb}$ **Ans.**

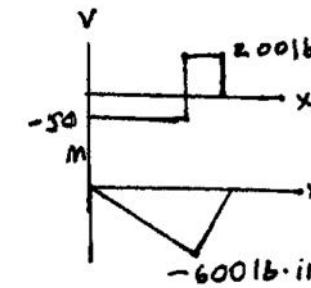

Ans:
$T_1 = 250 \text{ lb}, \; T_2 = 200 \text{ lb}$

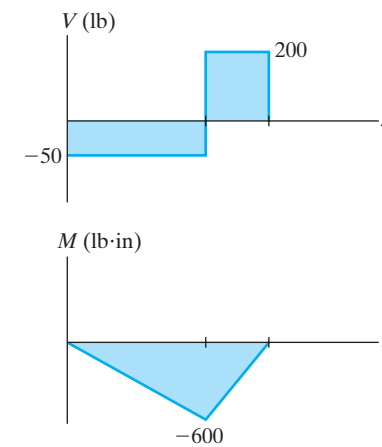

6–2. Draw the shear and moment diagrams for the shaft. The bearings at A and D exert only vertical reaction on the shaft. The loading is applied to the pulleys at B and C and E.

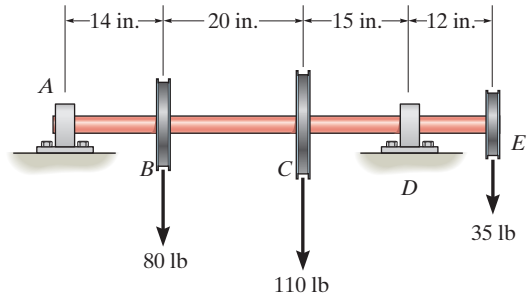

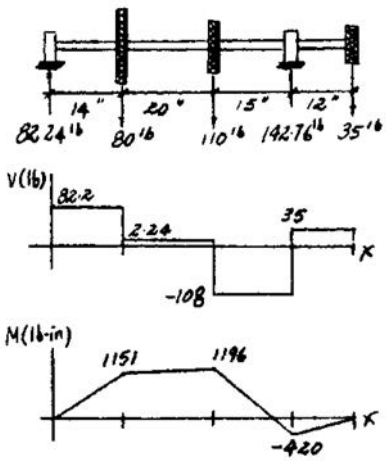

Ans:

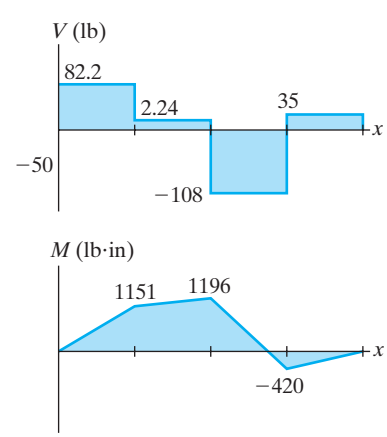

6–3. The engine crane is used to support the engine, which has a weight of 1200 lb. Draw the shear and moment diagrams of the boom ABC when it is in the horizontal position shown.

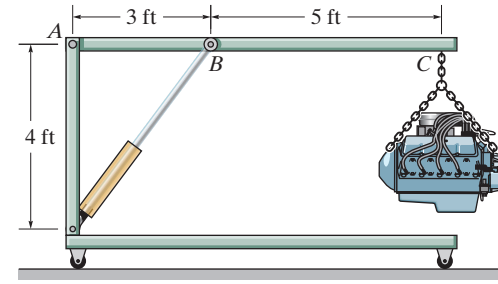

$$\circlearrowleft + \Sigma M_A = 0; \qquad \frac{4}{5} F_B(3) - 1200(8) = 0; \qquad F_B = 4000 \text{ lb}$$

$$+\uparrow \Sigma F_y = 0; \qquad -A_y + \frac{4}{5}(4000) - 1200 = 0; \qquad A_y = 2000 \text{ lb}$$

$$\overset{+}{\leftarrow} \Sigma F_x = 0; \qquad A_x - \frac{3}{5}(4000) = 0; \qquad A_x = 2400 \text{ lb}$$

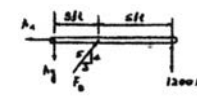

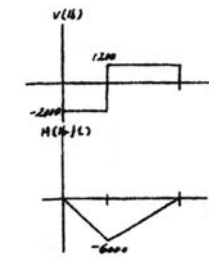

Ans:

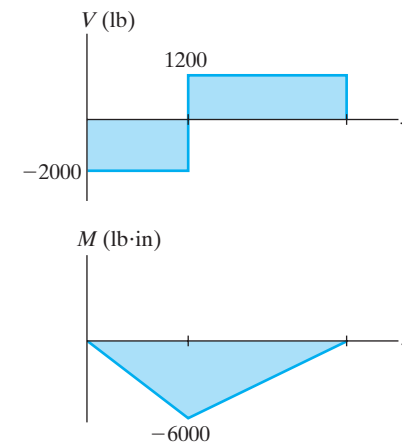

***6–4.** Draw the shear and moment diagrams for the beam.

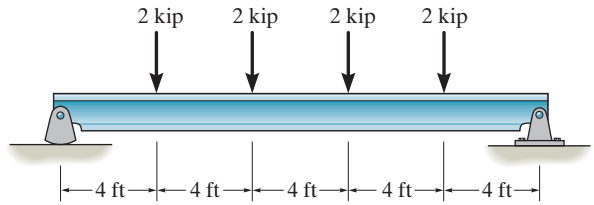

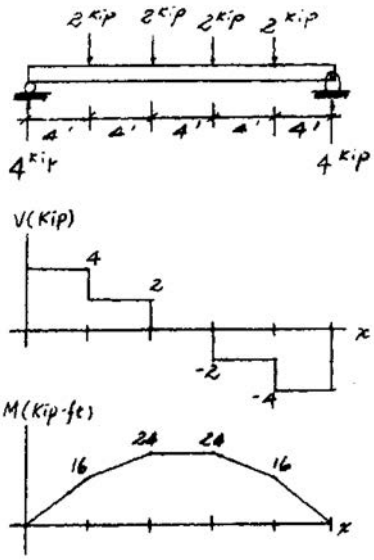

6–5. Draw the shear and moment diagrams for the beam.

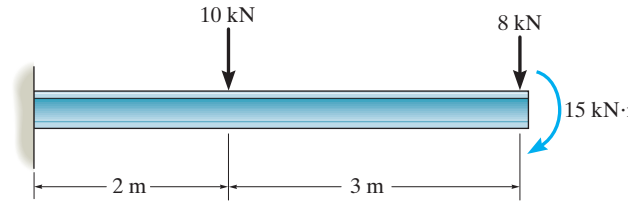

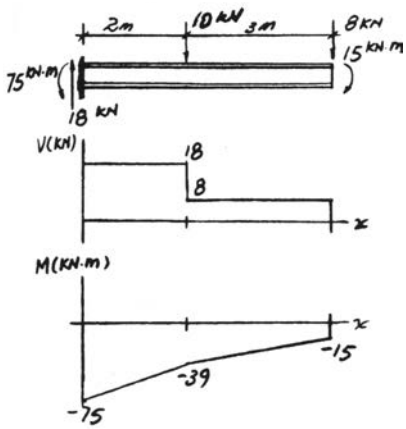

Ans:

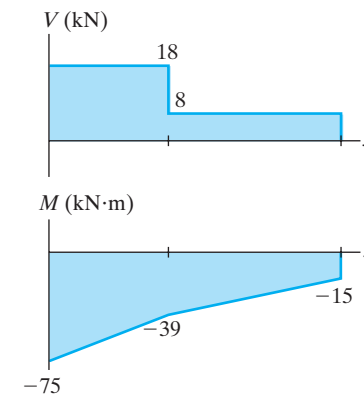

6–6. Express the internal shear and moment in terms of x and then draw the shear and moment diagrams.

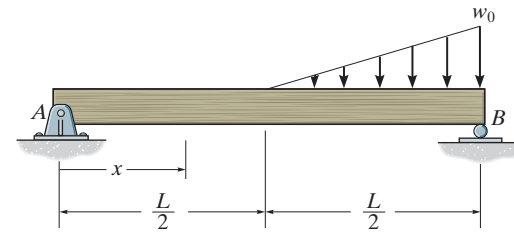

Support Reactions: Referring to the free-body diagram of the entire beam shown in Fig. *a*,

$$\circlearrowleft + \Sigma M_A = 0; \qquad B_y(L) - \frac{1}{2}w_0\left(\frac{L}{2}\right)\left(\frac{5}{6}L\right) = 0$$

$$B_y = \frac{5}{24}w_0L$$

$$+\uparrow \Sigma F_y = 0; \qquad A_y + \frac{5}{24}w_0L - \frac{1}{2}w_0\left(\frac{L}{2}\right) = 0$$

$$A_y = \frac{w_0L}{24}$$

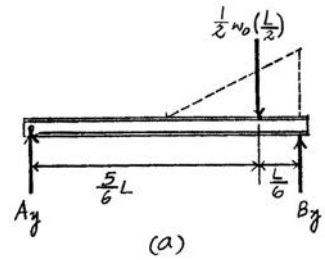

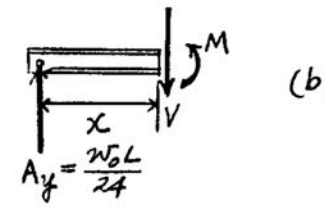

Shear and Moment Function: For $0 \le x < \frac{L}{2}$, we refer to the free-body diagram of the beam segment shown in Fig. *b*.

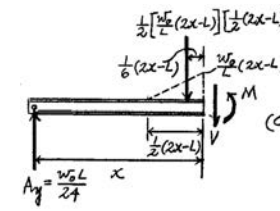

$$+\uparrow \Sigma F_y = 0; \qquad \frac{w_0L}{24} - V = 0$$

$$V = \frac{w_0L}{24} \qquad \textbf{Ans.}$$

$$\circlearrowleft + \Sigma M = 0; \; M - \frac{w_0L}{24}x = 0$$

$$M = \frac{w_0L}{24}x \qquad \textbf{Ans.}$$

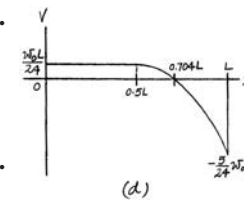

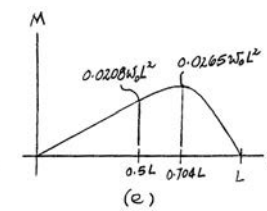

For $\frac{L}{2} < x \le L$, we refer to the free-body diagram of the beam segment shown in Fig. *c*.

$$+\uparrow \Sigma F_y = 0; \qquad \frac{w_0L}{24} - \frac{1}{2}\left[\frac{w_0}{L}(2x - L)\right]\left[\frac{1}{2}(2x - L)\right] - V = 0$$

$$V = \frac{w_0}{24L}\left[L^2 - 6(2x - L)^2\right] \qquad \textbf{Ans.}$$

$$\circlearrowleft + \Sigma M = 0; \; M + \frac{1}{2}\left[\frac{w_0}{L}(2x - L)\right]\left[\frac{1}{2}(2x - L)\right]\left[\frac{1}{6}(2x - L)\right] - \frac{w_0}{24L}x = 0$$

$$M = \frac{w_0}{24L}\left[L^2x - (2x - L)^3\right] \qquad \textbf{Ans.}$$

Ans:

For $0 \le x < \frac{L}{2}$: $V = \frac{w_0L}{24}$, $M = \frac{w_0L}{24}x$,

For $\frac{L}{2} < x \le L$: $V = \frac{w_0}{24L}[L^2 - 6(2x - L)^2]$,

$M = \frac{w_0}{24L}[L^2x - (2x - L)^3]$

When $V = 0$, the shear function gives

$$0 = L^2 - 6(2x - L)^2 \qquad x = 0.7041L$$

Substituting this result into the moment equation,

$$M|_{x=0.7041L} = 0.0265w_0L^2$$

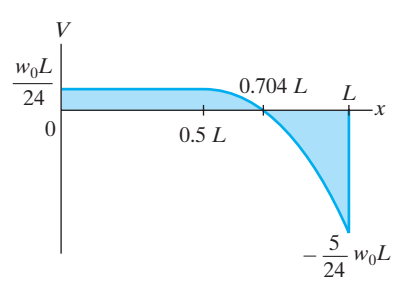

Shear and Moment Diagrams: As shown in Figs. *d* and *e*.

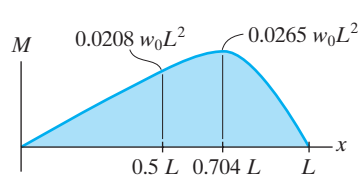

6–7. Draw the shear and moment diagrams for the compound beam which is pin connected at B. (This structure is not fully stable. But with the given loading, it is balanced and will remain as shown if not disturbed.)

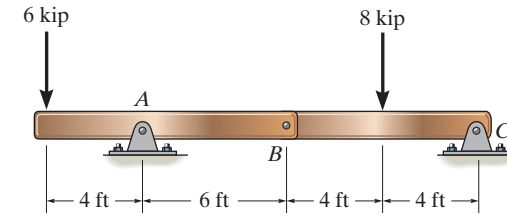

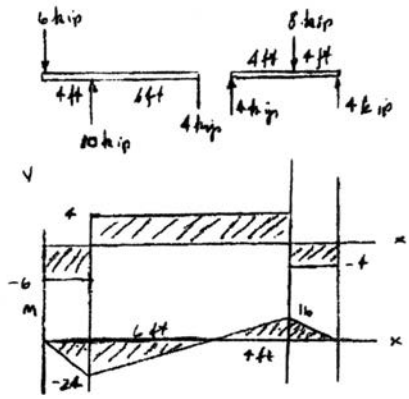

Ans:

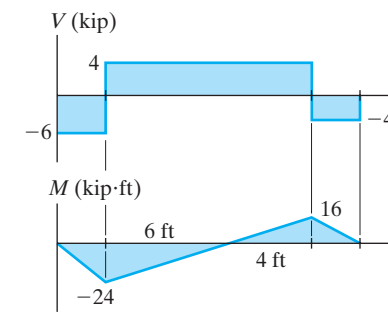

***6–8.** Express the internal shear and moment in terms of x and then draw the shear and moment diagrams for the beam.

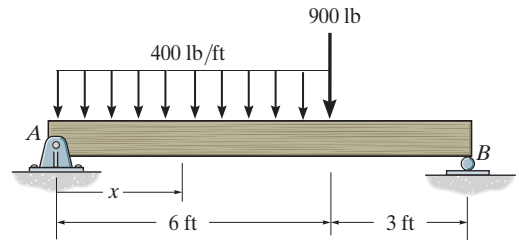

Support Reactions: Referring to the free-body diagram of the entire beam shown in Fig. *a*,

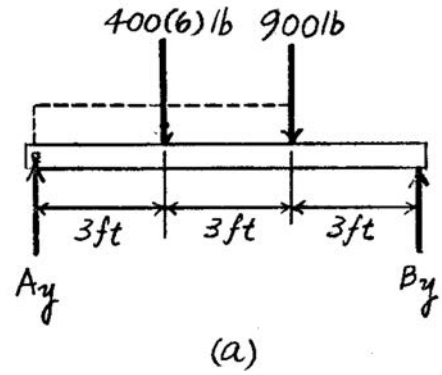

$\circlearrowleft + \Sigma M_A = 0;$ $\quad B_y(9) - 400(6)(3) - 900(6) = 0$

$B_y = 1400 \text{ lb}$

$+\uparrow \Sigma F_y = 0;$ $\quad A_y + 1400 - 400(6) - 900 = 0$

$A_y = 1900 \text{ lb}$

Shear and Moment Function: For $0 \leq x < 6$ ft, we refer to the free-body diagram of the beam segment shown in Fig. *b*.

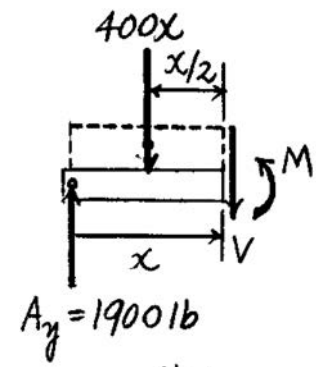

$+\uparrow \Sigma F_y = 0;$ $\quad 1900 - 400x - V = 0$

$V = \{1900 - 400x\} \text{ lb}$ **Ans.**

$\circlearrowleft + \Sigma M = 0;$ $\quad M + 400x\left(\frac{x}{2}\right) - 1900x = 0$

$M = \{1900x - 200x^2\} \text{ lb} \cdot \text{ft}$ **Ans.**

For 6 ft $< x \leq 9$ ft, we refer to the free-body diagram of the beam segment shown in Fig. *c*.

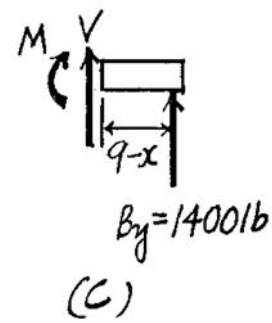

$+\uparrow \Sigma F_y = 0;$ $\quad V + 1400 = 0$

$V = -1400 \text{ lb}$ **Ans.**

$\circlearrowleft + \Sigma M = 0;$ $\quad 1400(9 - x) - M = 0$

$M = \{1400(9 - x)\} \text{ lb} \cdot \text{ft}$ **Ans.**

Shear and Moment Diagrams: As shown in Figs. *d* and *e*.

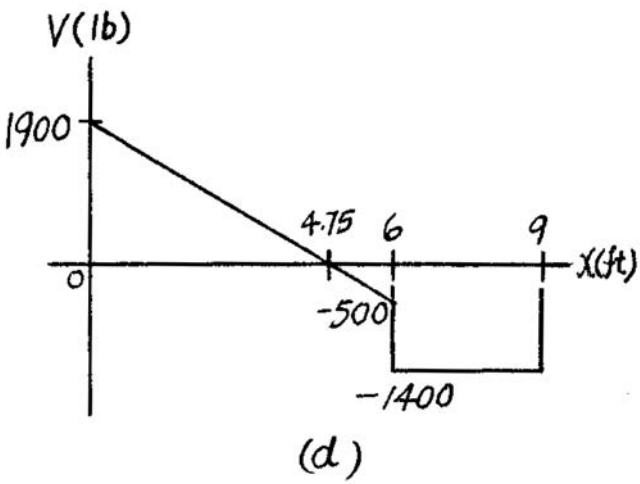

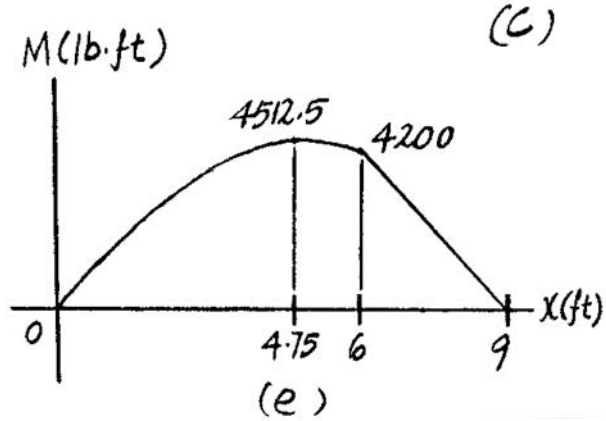

6–9. Express the internal shear and moment in terms of x and then draw the shear and moment diagrams for the overhanging beam.

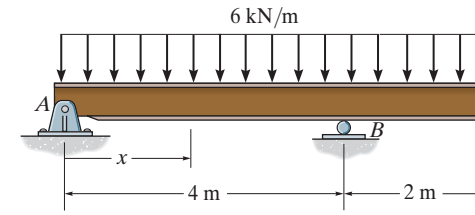

Support Reactions: Referring to the free-body diagram of the entire beam shown in Fig. *a*,

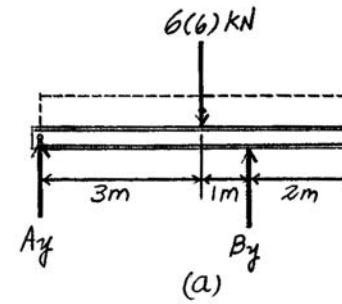

$$\circlearrowleft + \Sigma M_A = 0; \qquad B_y(4) - 6(6)(3) = 0$$
$$B_y = 27 \text{ kN}$$

$$+\uparrow \Sigma F_y = 0; \qquad A_y + 27 - 6(6) = 0$$
$$A_y = 9 \text{ kN}$$

Shear and Moment Function: For $0 \le x < 4$ m, we refer to the free-body diagram of the beam segment shown in Fig. *b*.

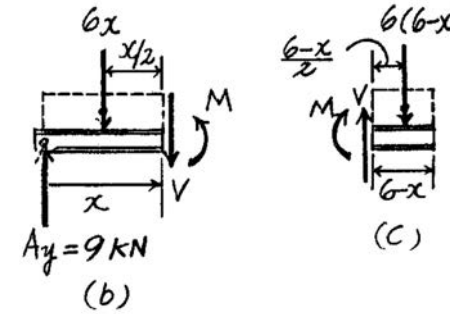

$$+\uparrow \Sigma F_y = 0; \qquad 9 - 6x - V = 0$$
$$V = \{9 - 6x\} \text{ kN} \qquad \textbf{Ans.}$$

$$\circlearrowleft + \Sigma M = 0; \qquad M + 6x\left(\frac{x}{2}\right) - 9x = 0$$
$$M = \{9x - 3x^2\} \text{ kN}\cdot\text{m} \qquad \textbf{Ans.}$$

For $4 \text{ m} < x \le 6$ m, we refer to the free-body diagram of the beam segment shown in Fig. *c*.

$$+\uparrow \Sigma F_y = 0; \qquad V - 6(6 - x) = 0$$
$$V = \{6(6 - x)\} \text{ kN} \qquad \textbf{Ans.}$$

$$\circlearrowleft + \Sigma M = 0; \qquad -M - 6(6 - x)\left(\frac{6 - x}{2}\right) = 0$$
$$M = -\{3(6 - x)^2\} \text{ kN}\cdot\text{m} \qquad \textbf{Ans.}$$

Ans:
For $0 \le x < 4$ m: $V = \{9 - 6x\}$ kN,
$M = \{9x - 3x^2\}$ kN·m,
For $4 \text{ m} < x \le 6$ m: $V = \{6(6 - x)\}$ kN·m,
$M = -\{3(6 - x)^2\}$ kN·m

Shear and Moment Diagrams: As shown in Figs. *d* and *e*.

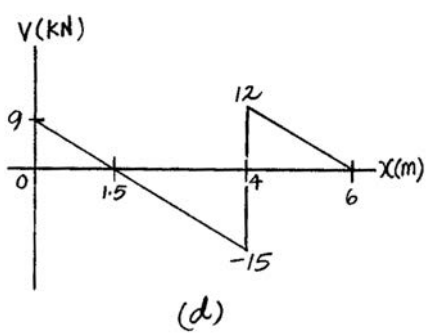

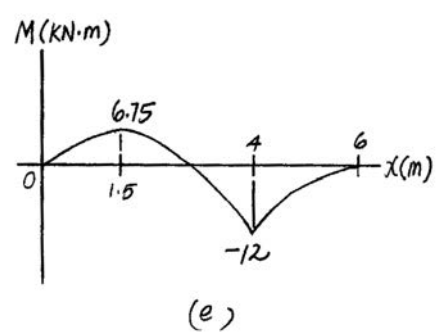

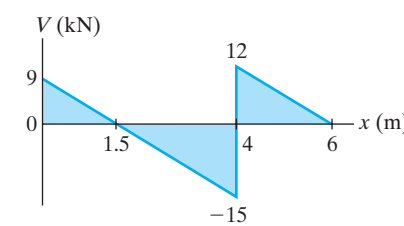

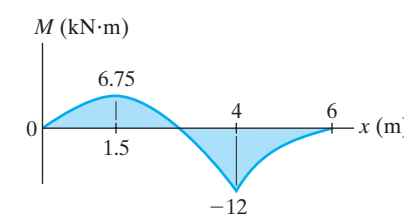

6–10. Members ABC and BD of the counter chair are rigidly connected at B and the smooth collar at D is allowed to move freely along the vertical slot. Draw the shear and moment diagrams for member ABC.

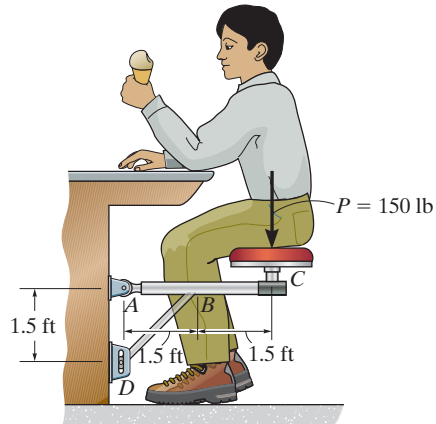

Equations of Equilibrium: Referring to the free-body diagram of the frame shown in Fig. *a*,

$+\uparrow \Sigma F_y = 0;$ $\quad A_y - 150 = 0$

$A_y = 150 \text{ lb}$

$\circlearrowleft + \Sigma M_A = 0;$ $\quad N_D(1.5) - 150(3) = 0$

$N_D = 300 \text{ lb}$

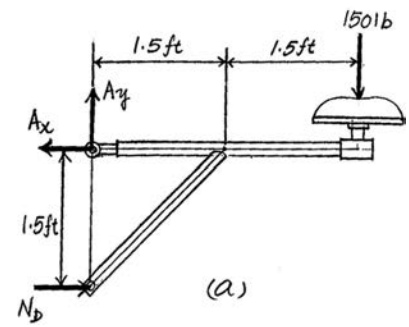

Shear and Moment Diagram: The couple moment acting on B due to N_D is $M_B = 300(1.5) = 450 \text{ lb} \cdot \text{ft}$. The loading acting on member ABC is shown in Fig. *b* and the shear and moment diagrams are shown in Figs. *c* and *d*.

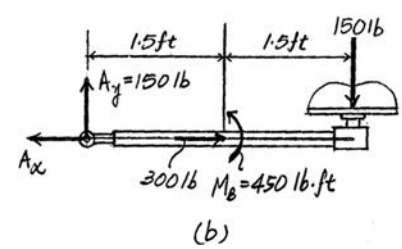

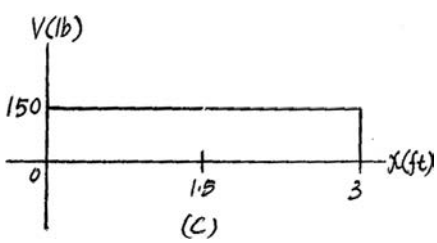

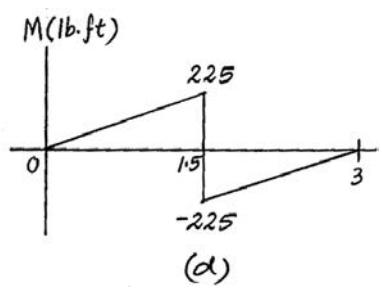

Ans:

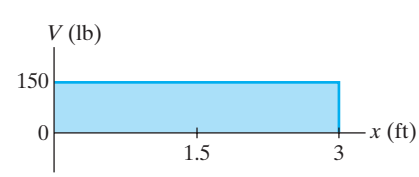

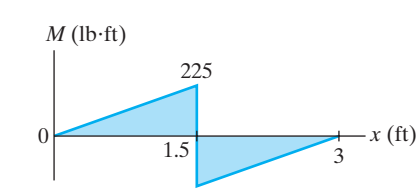

6–11. Draw the shear and moment diagrams for the pipe. The end screw is subjected to a horizontal force of 5 kN. *Hint:* The reactions at the pin C must be replaced by an equivalent loading at point B on the axis of the pipe.

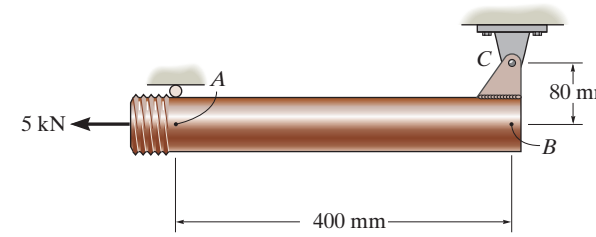

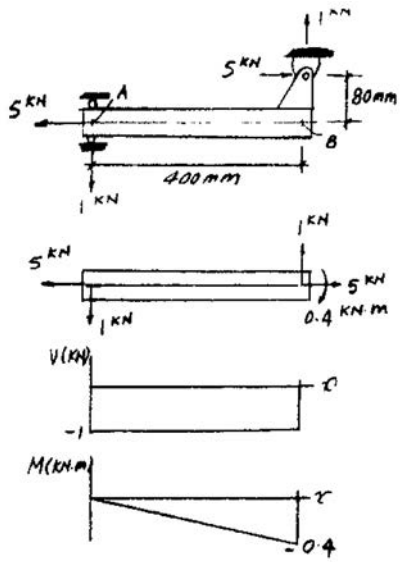

Ans:

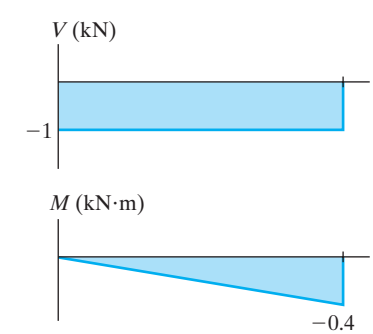

***6–12.** A reinforced concrete pier is used to support the stringers for a bridge deck. Draw the shear and moment diagrams for the pier when it is subjected to the stringer loads shown. Assume the columns at A and B exert only vertical reactions on the pier.

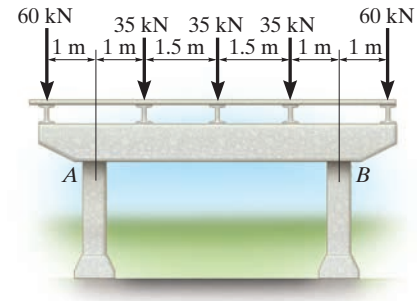

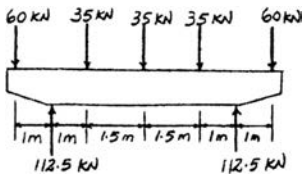

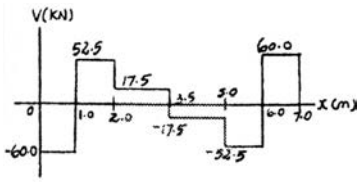

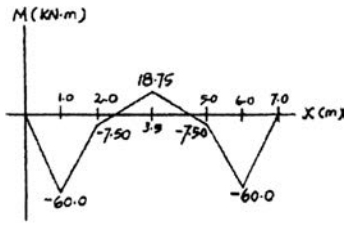

6–13. Draw the shear and moment diagrams for the rod. It is supported by a pin at A and a smooth plate at B. The plate slides within the groove and so it cannot support a vertical force, although it can support a moment.

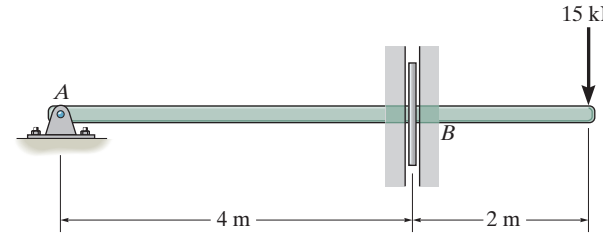

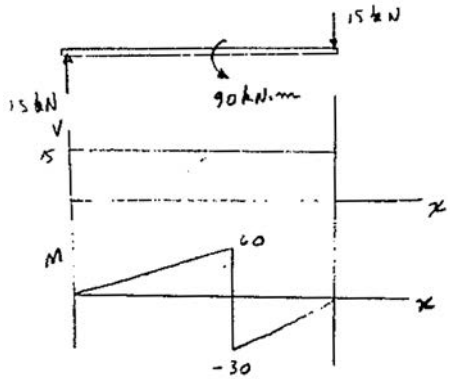

Ans:

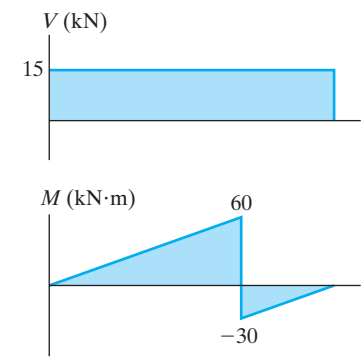

6–14. The industrial robot is held in the stationary position shown. Draw the shear and moment diagrams of the arm *ABC* if it is pin connected at *A* and connected to a hydraulic cylinder (two-force member) *BD*. Assume the arm and grip have a uniform weight of 1.5 lb/in. and support the load of 40 lb at *C*.

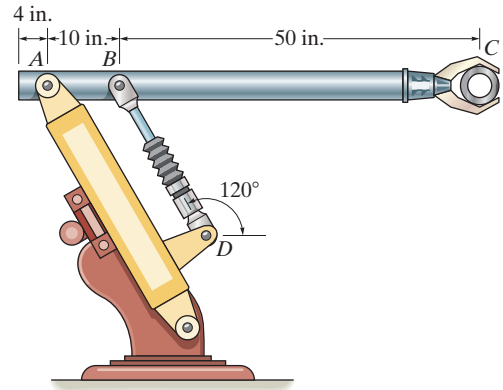

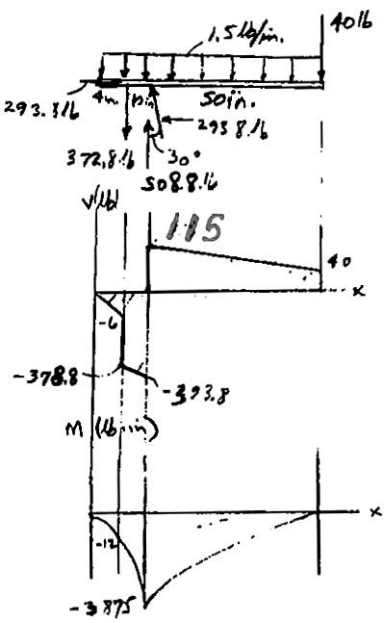

Ans:

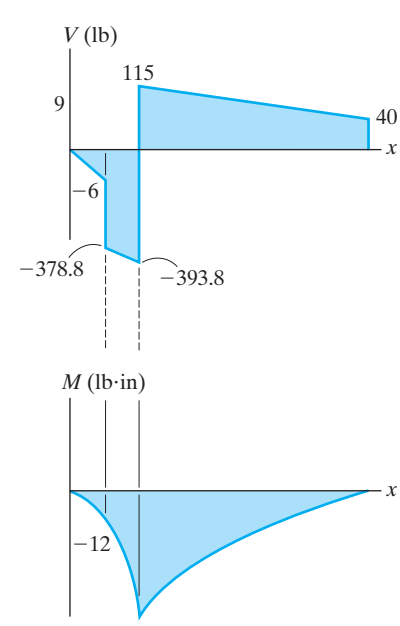

***6–16.** Determine the placement distance a of the roller support so that the largest absolute value of the moment is a minimum. Draw the shear and moment diagrams for this condition.

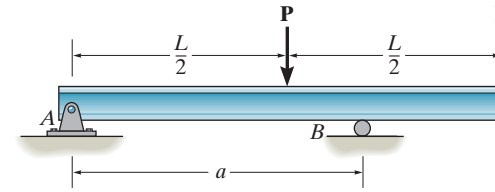

Support Reactions: As shown on FBD.

Absolute Minimum Moment: In order to get the absolute minimum moment, the maximum positive and maximum negative moment must be equal that is $M_{\max(+)} = M_{\max(-)}$.

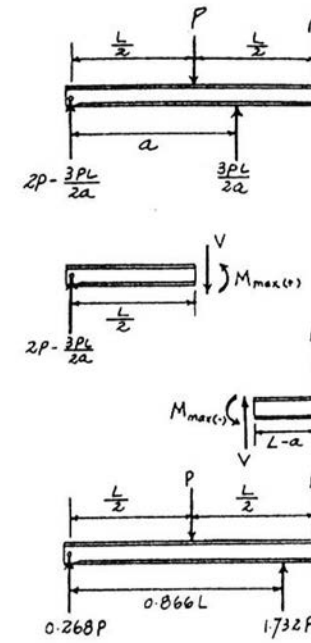

For the positive moment:

$$\circlearrowleft + \Sigma M_{NA} = 0; \qquad M_{\max(+)} - \left(2P - \frac{3PL}{2a}\right)\left(\frac{L}{2}\right) = 0$$

$$M_{\max(+)} = PL - \frac{3PL^2}{4a}$$

For the negative moment:

$$\circlearrowleft + \Sigma M_{NA} = 0; \qquad M_{\max(-)} - P(L - a) = 0$$

$$M_{\max(-)} = P(L - a)$$

$$M_{\max(+)} = M_{\max(-)}$$

$$PL - \frac{3PL^2}{4a} = P(L - a)$$

$$4a\,L - 3L^2 = 4a\,L - 4a^2$$

$$a = \frac{\sqrt{3}}{2}L = 0.866L \qquad \textbf{Ans.}$$

Shear and Moment Diagram:

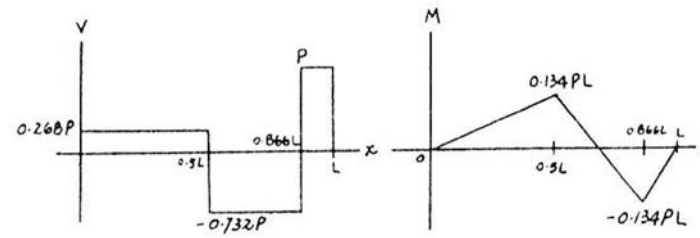

6–17. Express the internal shear and moment in the cantilevered beam as a function of x and then draw the shear and moment diagrams.

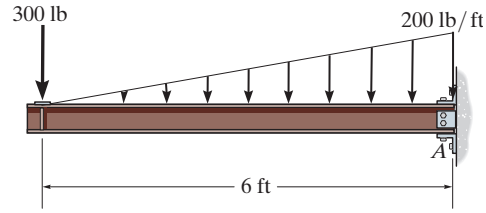

The free-body diagram of the beam's left segment sectioned through an arbitrary point shown in Fig. b will be used to write the shear and moment equations. The intensity of the triangular distributed load at the point of sectioning is

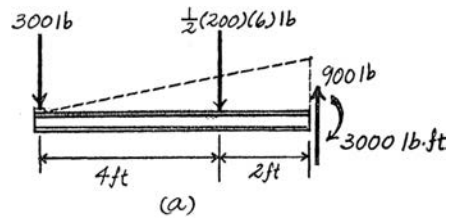

$$w = 200\left(\frac{x}{6}\right) = 33.33x$$

Referring to Fig. b,

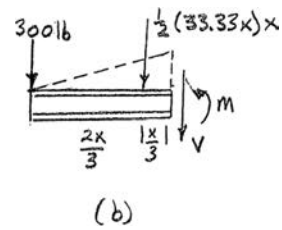

$$+\uparrow \Sigma F_y = 0; \qquad -300 - \frac{1}{2}(33.33x)(x) - V = 0 \qquad V = \{-300 - 16.67x^2\}\ \text{lb} \quad (1) \quad \textbf{Ans.}$$

$$\circlearrowleft + \Sigma M = 0;\ M + \frac{1}{2}(33.33x)(x)\left(\frac{x}{3}\right) + 300x = 0 \qquad M = \{-300x - 5.556x^3\}\ \text{lb}\cdot\text{ft} \quad (2) \quad \textbf{Ans.}$$

The shear and moment diagrams shown in Figs. c and d are plotted using Eqs. (1) and (2), respectively.

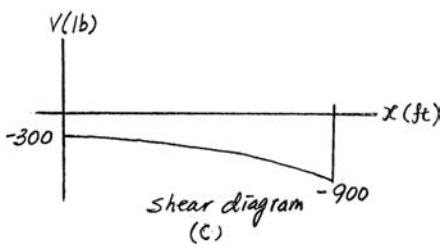

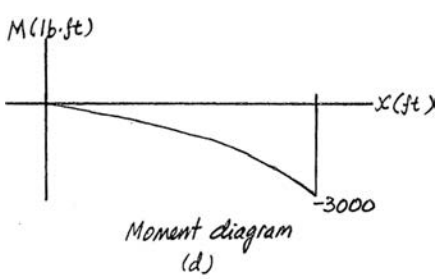

Ans:
$V = \{-300 - 16.67x^2\}$ lb,
$M = \{-300x - 5.556x^3\}$ lb · ft

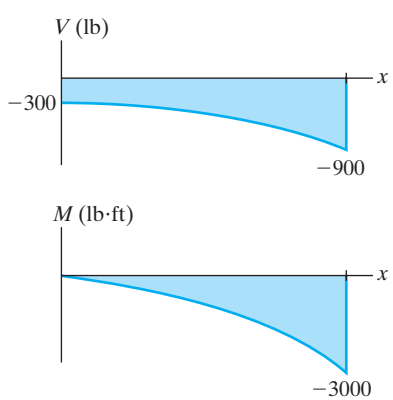

6–18. Draw the shear and moment diagrams for the beam, and determine the shear and moment throughout the beam as functions of x.

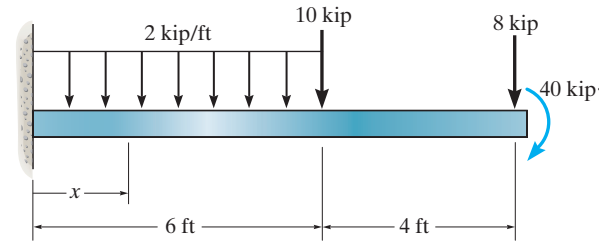

Support Reactions: As shown on FBD.

Shear and Moment Function:

For $0 \le x < 6$ ft:

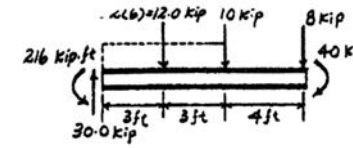

$$+\uparrow \Sigma F_y = 0; \qquad 30.0 - 2x - V = 0$$

$$V = \{30.0 - 2x\} \text{ kip} \qquad \textbf{Ans.}$$

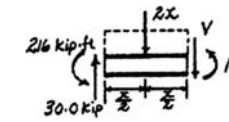

$$\circlearrowleft + \Sigma M_{NA} = 0; \quad M + 216 + 2x\left(\frac{x}{2}\right) - 30.0x = 0$$

$$M = \{-x^2 + 30.0x - 216\} \text{ kip} \cdot \text{ft} \qquad \textbf{Ans.}$$

For 6 ft $< x \le 10$ ft:

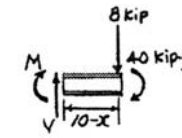

$$+\uparrow \Sigma F_y = 0; \qquad V - 8 = 0 \qquad V = 8.00 \text{ kip} \qquad \textbf{Ans.}$$

$$\circlearrowleft + \Sigma M_{NA} = 0; \qquad -M - 8(10 - x) - 40 = 0$$

$$M = \{8.00x - 120\} \text{ kip} \cdot \text{ft} \qquad \textbf{Ans.}$$

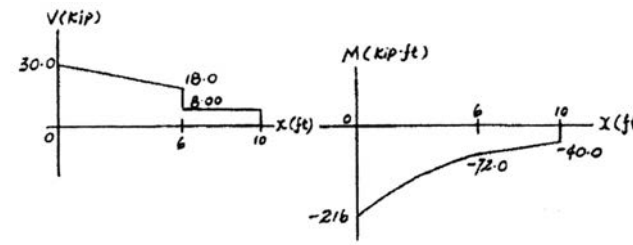

Ans:

For $0 \le x < 6$ ft: $V = \{30.0 - 2x\}$ kip,

$M = \{-x^2 + 30.0x - 216\}$ kip·ft,

For 6 ft $< x \le 10$ ft: $V = 8.00$ kip,

$M = \{8.00x - 120\}$ kip·ft

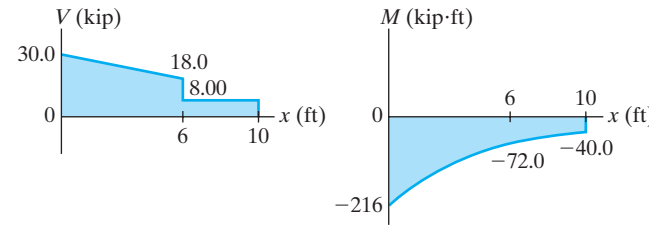

6–19. Draw the shear and moment diagrams for the beam.

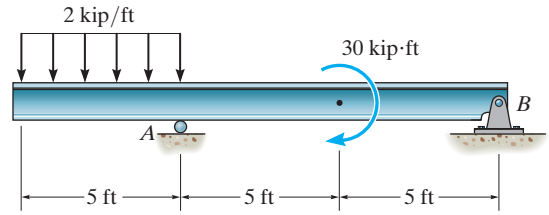

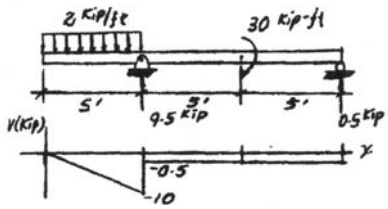

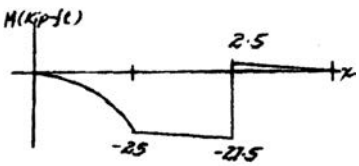

Ans:

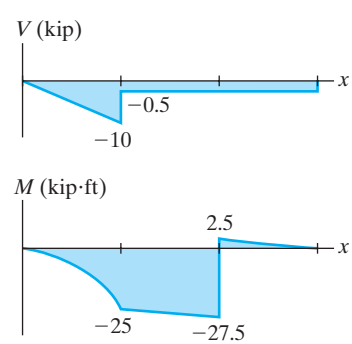

***6–20.** Draw the shear and moment diagrams for the overhanging beam.

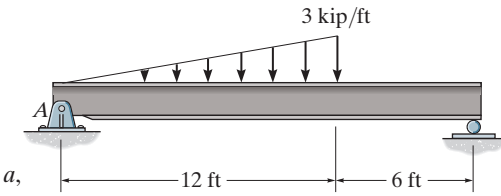

Support Reactions: Referring to the free-body diagram of the beam shown in Fig. *a*,

$$\circlearrowleft + \Sigma M_A = 0; \qquad B_y(18) - \frac{1}{2}(3)(12)(8) = 0$$
$$B_y = 8 \text{ kip}$$

$$+\uparrow \Sigma F_y = 0; \qquad A_y + 8 - \frac{1}{2}(3)(12) = 0$$
$$A_y = 10 \text{ kip}$$

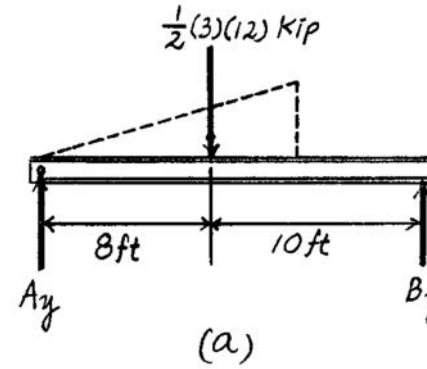

Shear and Moment Functions: For $0 \le x < 12$ ft, we refer to the free-body diagram of the beam segment shown in Fig. *b*.

$$+\uparrow \Sigma F_y = 0; \qquad 10 - \frac{1}{2}\left(\frac{1}{4}x\right)(x) - V = 0$$

$$V = \left\{10 - \frac{1}{8}x^2\right\} \text{ kip} \qquad \textbf{Ans.}$$

$$\circlearrowleft + \Sigma M = 0; \; M + \frac{1}{2}\left(\frac{1}{4}x\right)(x)\left(\frac{x}{3}\right) - 10x = 0$$

$$M = \left\{10x - \frac{1}{24}x^3\right\} \text{ kip} \cdot \text{ft} \qquad \textbf{Ans.}$$

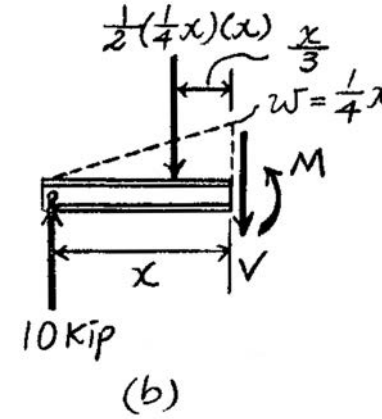

When $V = 0$, from the shear function,

$$0 = 10 - \frac{1}{8}x^2 \qquad x = 8.944 \text{ ft}$$

Substituting this result into the moment function,

$$M|_{x=8.944 \text{ ft}} = 59.6 \text{ kip} \cdot \text{ft}$$

For $12 \text{ ft} < x \le 18$ ft, we refer to the free-body diagram of the beam segment shown in Fig. *c*.

$$+\uparrow \Sigma F_y = 0; \qquad V + 8 = 0$$
$$V = -8 \text{ kip} \qquad \textbf{Ans.}$$

$$\circlearrowleft + \Sigma M = 0; \; 8(18 - x) - M = 0$$
$$M = \{8(18 - x)\} \text{ kip} \cdot \text{ft} \qquad \textbf{Ans.}$$

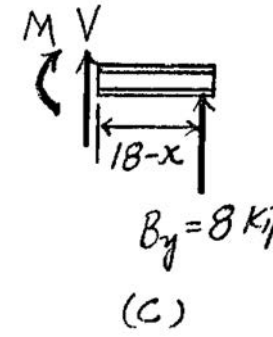

Shear and Moment Diagrams: As shown in Figs. *d* and *e*.

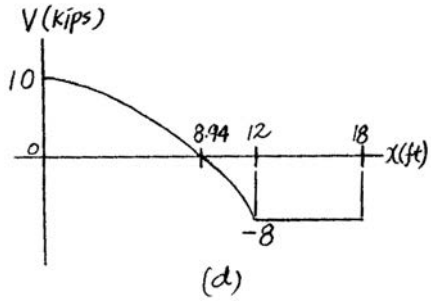

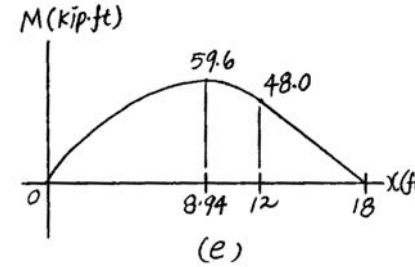

6–21. The 150-lb man sits in the center of the boat, which has a uniform width and a weight per linear foot of 3 lb/ft. Determine the maximum bending moment exerted on the boat. Assume that the water exerts a uniform distributed load upward on the bottom of the boat.

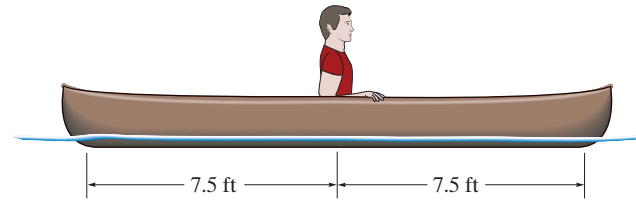

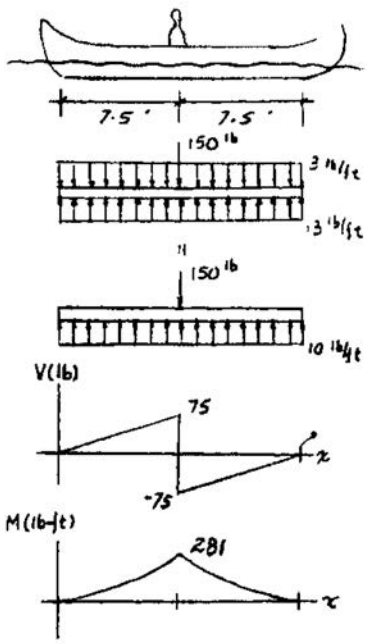

$M_{max} = 281 \text{ lb} \cdot \text{ft}$ **Ans.**

Ans:
$M_{max} = 281 \text{ lb} \cdot \text{ft}$

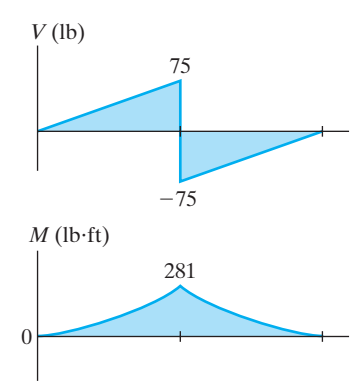

6–22. Draw the shear and moment diagrams for the overhang beam.

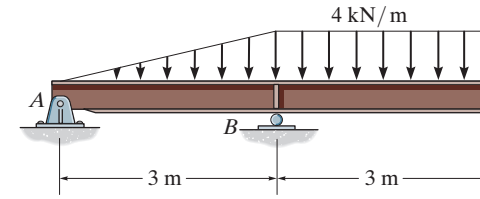

Since the loading is discontinuous at support B, the shear and moment equations must be written for regions $0 \le x < 3$ m and $3\text{ m} < x \le 6$ m of the beam. The free-body diagram of the beam's segment sectioned through an arbitrary point within these two regions is shown in Figs. b and c.

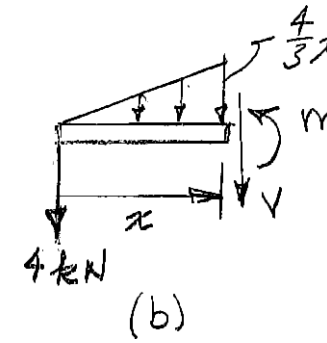

Region $0 \le x < 3$ m, Fig. b

$$+\uparrow \Sigma F_y = 0; \qquad -4 - \frac{1}{2}\left(\frac{4}{3}x\right)(x) - V = 0 \qquad V = \left\{-\frac{2}{3}x^2 - 4\right\}\text{ kN} \qquad (1)$$

$$\circlearrowleft + \Sigma M = 0;\ M + \frac{1}{2}\left(\frac{4}{3}x\right)(x)\left(\frac{x}{3}\right) + 4x = 0 \qquad M = \left\{-\frac{2}{9}x^3 - 4x\right\}\text{ kN}\cdot\text{m} \qquad (2)$$

Region $3\text{ m} < x \le 6$ m, Fig. c

$$+\uparrow \Sigma F_y = 0; \qquad V - 4(6 - x) = 0 \qquad V = \{24 - 4x\}\text{ kN} \qquad (3)$$

$$\circlearrowleft + \Sigma M = 0;\ -M - 4(6 - x)\left[\frac{1}{2}(6 - x)\right] = 0 \qquad M = \{-2(6 - x)^2\}\text{kN}\cdot\text{m} \qquad (4)$$

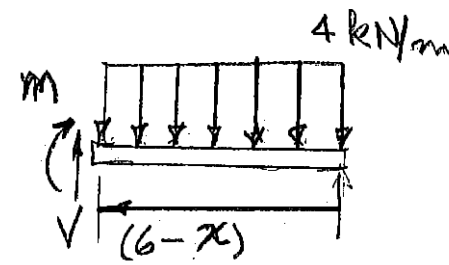

(c)

The shear diagram shown in Fig. d is plotted using Eqs. (1) and (3). The value of shear just to the left and just to the right of the support is evaluated using Eqs. (1) and (3), respectively.

$$V\big|_{x=3\text{ m}-} = -\frac{2}{3}(3^2) - 4 = -10\text{ kN}$$

$$V\big|_{x=3\text{ m}+} = 24 - 4(3) = 12\text{ kN}$$

The moment diagram shown in Fig. e is plotted using Eqs. (2) and (4). The value of the moment at support B is evaluated using either Eq. (2) or Eq. (4).

$$M\big|_{x=3\text{ m}} = -\frac{2}{9}(3^3) - 4(3) = -18\text{ kN}\cdot\text{m}$$

or

$$M\big|_{x=3\text{ m}} = -2(6 - 3)^2 = -18\text{ kN}\cdot\text{m}$$

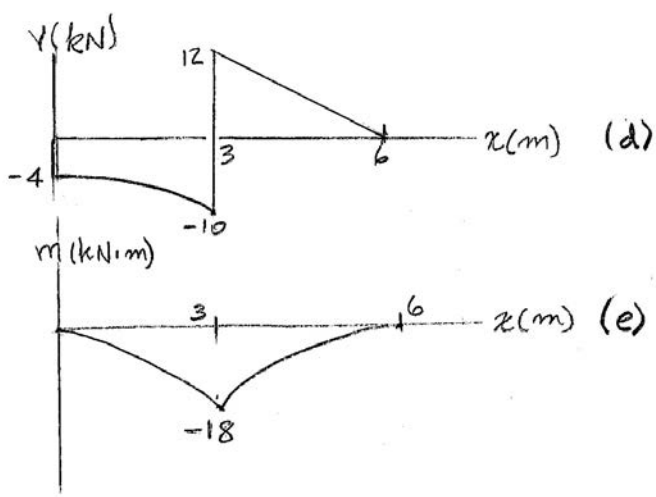

Ans:

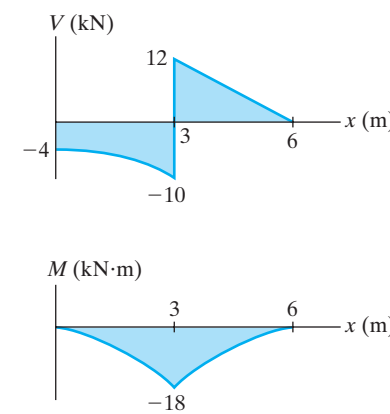

6–23. The footing supports the load transmitted by the two columns. Draw the shear and moment diagrams for the footing if the reaction of soil pressure on the footing is assumed to be uniform.

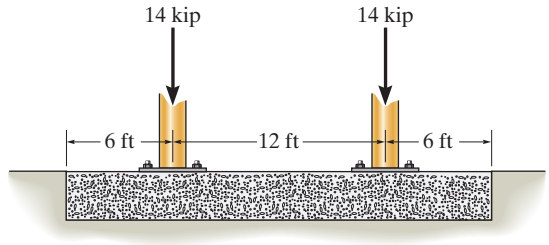

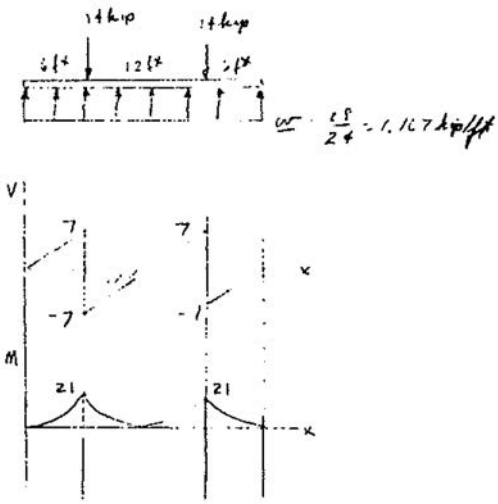

Ans:

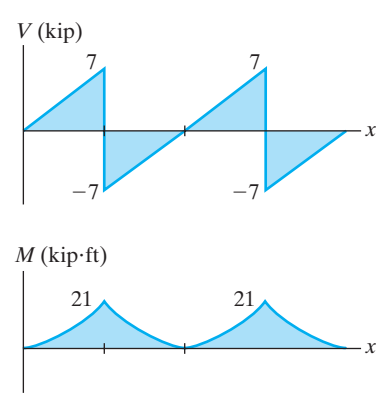

***6–24.** Express the shear and moment in terms of x and then draw the shear and moment diagrams for the simply supported beam.

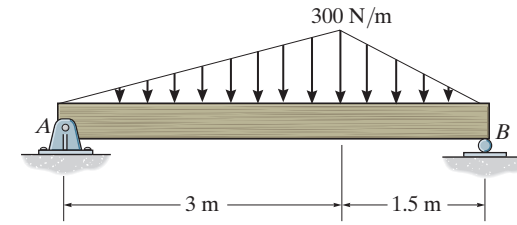

Support Reactions: Referring to the free-body diagram of the entire beam shown in Fig. *a*,

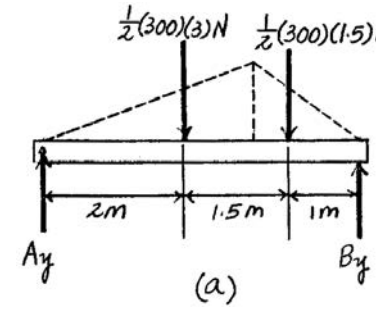

$$\circlearrowleft + \Sigma M_A = 0; \qquad B_y(4.5) - \frac{1}{2}(300)(3)(2) - \frac{1}{2}(300)(1.5)(3.5) = 0$$

$$B_y = 375 \text{ N}$$

$$+\uparrow \Sigma F_y = 0; \qquad A_y + 375 - \frac{1}{2}(300)(3) - \frac{1}{2}(300)(1.5) = 0$$

$$A_y = 300 \text{ N}$$

Shear and Moment Function: For $0 \le x < 3$ m, we refer to the free-body diagram of the beam segment shown in Fig. *b*.

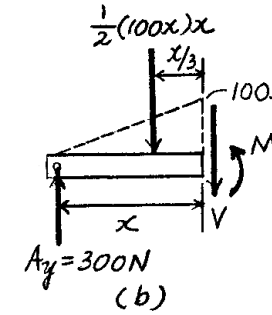

$$+\uparrow \Sigma F_y = 0; \qquad 300 - \frac{1}{2}(100x)x - V = 0$$

$$V = \{300 - 50x^2\}\text{N} \qquad \textbf{Ans.}$$

$$\circlearrowleft + \Sigma M = 0; \; M + \frac{1}{2}(100x)x\left(\frac{x}{3}\right) - 300x = 0$$

$$M = \left\{300x - \frac{50}{3}x^3\right\}\text{N}\cdot\text{m} \qquad \textbf{Ans.}$$

When $V = 0$, from the shear function,

$$0 = 300 - 50x^2 \qquad\qquad x = \sqrt{6}\text{ m}$$

Substituting this result into the moment equation,

$$M|_{x=\sqrt{6}\text{ m}} = 489.90 \text{ N}\cdot\text{m}$$

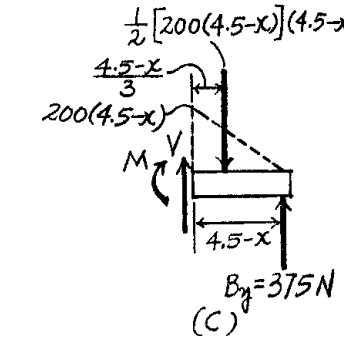

For $3 \text{ m} < x \le 4.5$ m, we refer to the free-body diagram of the beam segment shown in Fig. *c*.

$$+\uparrow \Sigma F_y = 0; \qquad V + 375 - \frac{1}{2}[200(4.5 - x)](4.5 - x) = 0$$

$$V = \left\{100(4.5 - x)^2 - 375\right\}\text{N} \qquad \textbf{Ans.}$$

$$\circlearrowleft + \Sigma M = 0; \; 375(4.5 - x) - \frac{1}{2}[200(4.5 - x)](4.5 - x)\left(\frac{4.5 - x}{3}\right) - M = 0$$

$$M = \left\{375(4.5 - x) - \frac{100}{3}(4.5 - x)^3\right\}\text{N}\cdot\text{m} \qquad \textbf{Ans.}$$

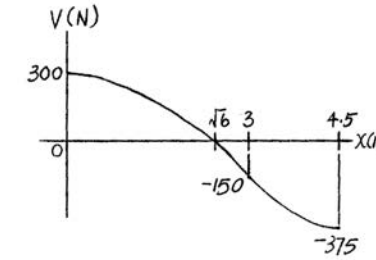

Shear and Moment Diagrams: As shown in Figs. *d* and *e*.

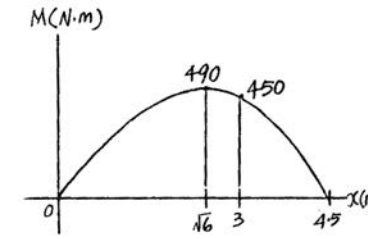

6–25. Draw the shear and moment diagrams for the beam and determine the shear and moment in the beam as functions of x, where 4 ft < x < 10 ft.

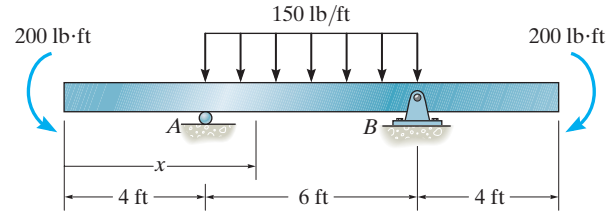

$+\uparrow \Sigma F_y = 0; \qquad -150(x-4) - V + 450 = 0$

$$V = 1050 - 150x \qquad \textbf{Ans.}$$

$\circlearrowleft + \Sigma M = 0; \qquad -200 - 150(x-4)\dfrac{(x-4)}{2} - M + 450(x-4) = 0$

$$M = -75x^2 + 1050x - 3200 \qquad \textbf{Ans.}$$

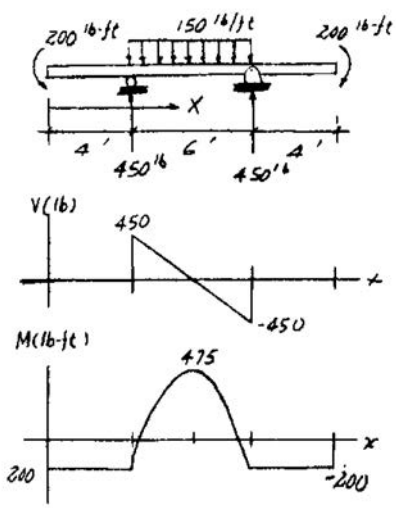

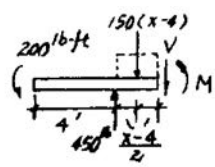

Ans:

$V = 1050 - 150x$

$M = -75x^2 + 1050x - 3200$

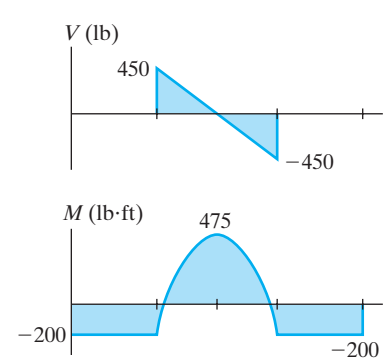

6–27. Draw the shear and moment diagrams for the beam.

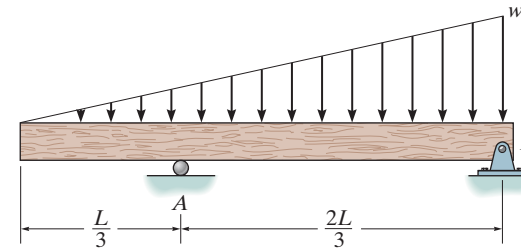

$$+\uparrow \Sigma F_y = 0; \qquad \frac{w_0 L}{4} - \frac{1}{2}\left(\frac{w_0 x}{L}\right)(x) = 0$$

$$x = 0.7071\,L$$

$$\circlearrowleft + \Sigma M_{NA} = 0; \qquad M + \frac{1}{2}\left(\frac{w_0 x}{L}\right)(x)\left(\frac{x}{3}\right) - \frac{w_0 L}{4}\left(x - \frac{L}{3}\right) = 0$$

Substitute $x = 0.7071L$,

$$M = 0.0345\, w_0 L^2$$

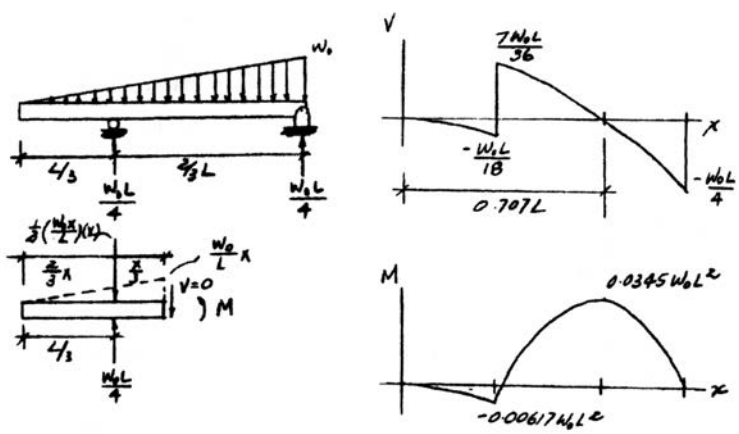

Ans:

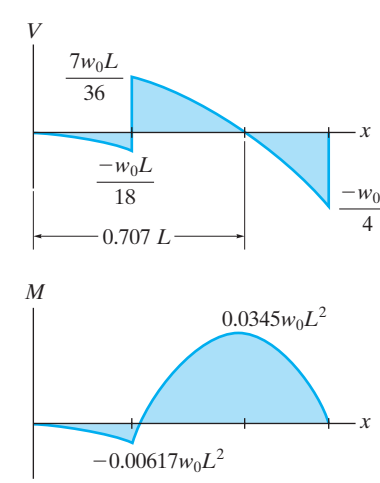

***6–28.** Draw the shear and moment diagrams for the beam.

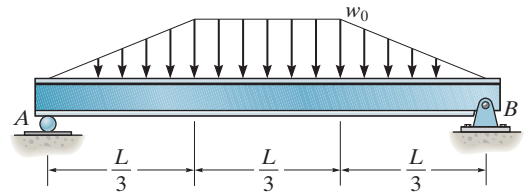

Support Reactions: As shown on FBD.

Shear and Moment Diagram: Shear and moment at $x = L/3$ can be determined using the method of sections.

$$+\uparrow \Sigma F_y = 0; \qquad \frac{w_0 L}{3} - \frac{w_0 L}{6} - V = 0 \qquad V = \frac{w_0 L}{6}$$

$$\circlearrowleft + \Sigma M_{NA} = 0; \qquad M + \frac{w_0 L}{6}\left(\frac{L}{9}\right) - \frac{w_0 L}{3}\left(\frac{L}{3}\right) = 0$$

$$M = \frac{5 w_0 L^2}{54}$$

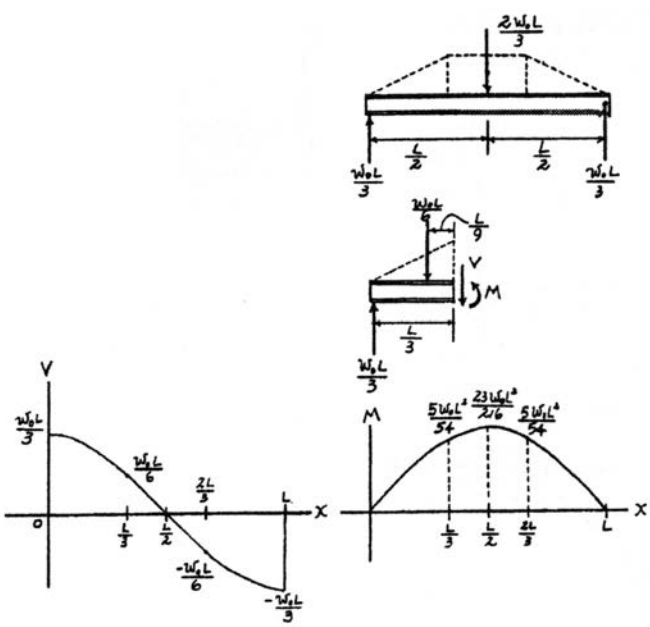

6–29. Draw the shear and moment diagrams for the double overhanging beam.

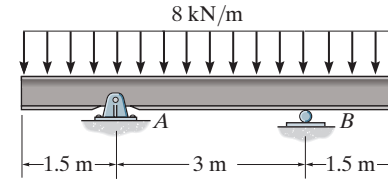

Equations of Equilibrium: Referring to the free-body diagram shown in Fig. *a*,

$\circlearrowleft + \Sigma M_A = 0;$ $\quad B_y(3) - 8(6)(1.5) = 0$

$B_y = 24 \text{ kN}$

$+\uparrow \Sigma F_y = 0;$ $\quad A_y + 24 - 8(6) = 0$

$A_y = 24 \text{ kN}$

Shear and Moment Diagram: As shown in Figs. *b* and *c*.

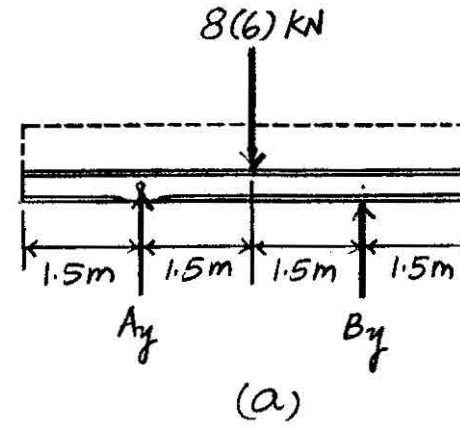

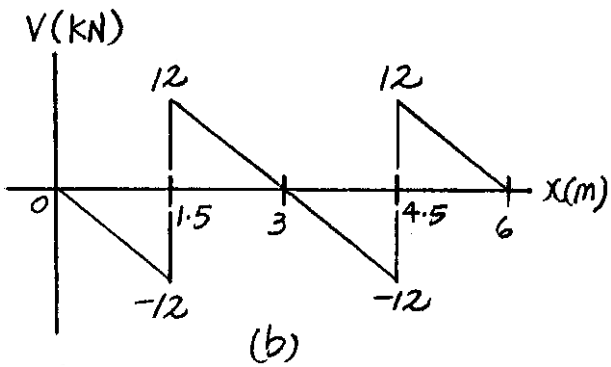

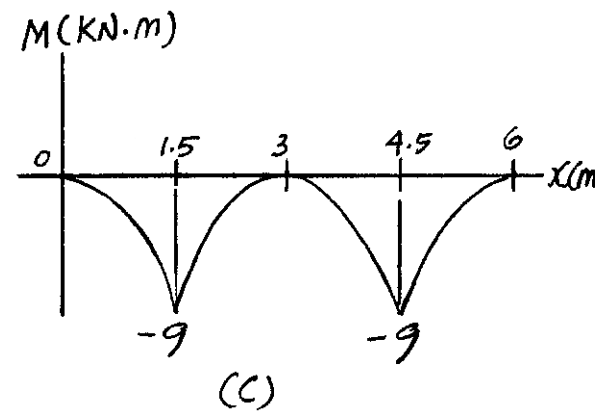

Ans:

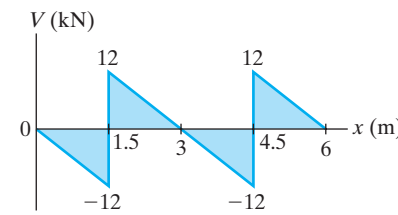

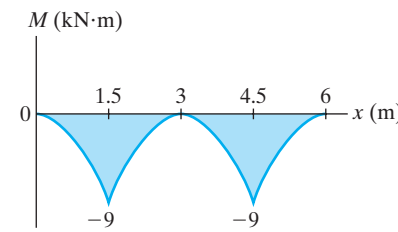

6–30. The beam is bolted or pinned at A and rests on a bearing pad at B that exerts a uniform distributed loading on the beam over its 2-ft length. Draw the shear and moment diagrams for the beam if it supports a uniform loading of 2 kip/ft.

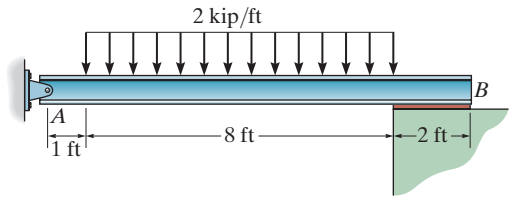

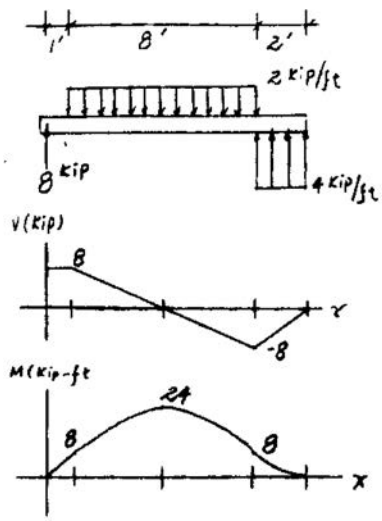

Ans:

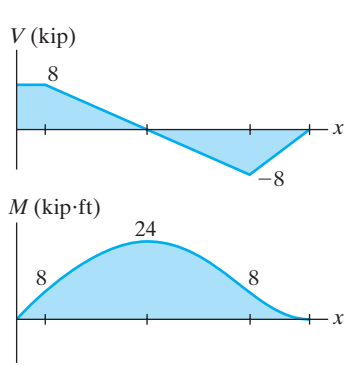

6–31. The support at A allows the beam to slide freely along the vertical guide so that it cannot support a vertical force. Draw the shear and moment diagrams for the beam.

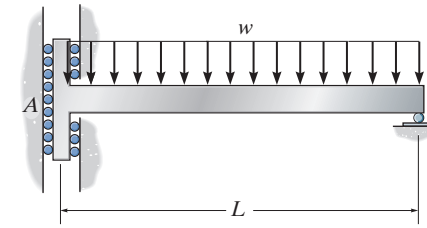

Equations of Equilibrium: Referring to the free-body diagram of the beam shown in Fig. *a*,

$\circlearrowleft + \Sigma M_B = 0;$ $\quad wL\left(\frac{L}{2}\right) - M_A = 0$

$$M_A = \frac{wL^2}{2}$$

$+\uparrow \Sigma F_y = 0;$ $\quad B_y - wL = 0$

$$B_y = wL$$

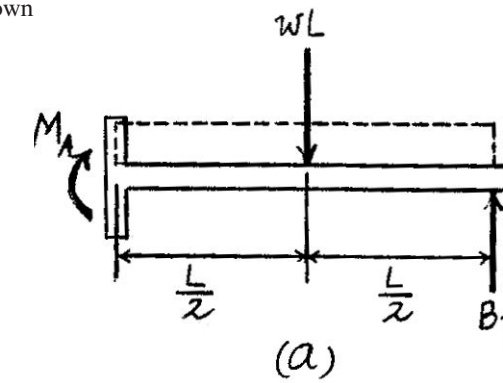

Shear and Moment Diagram: As shown in Figs. *b* and *c*.

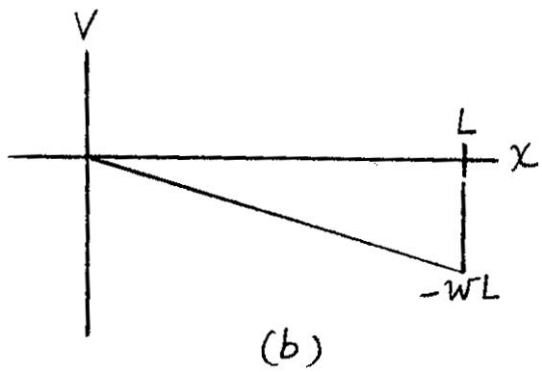

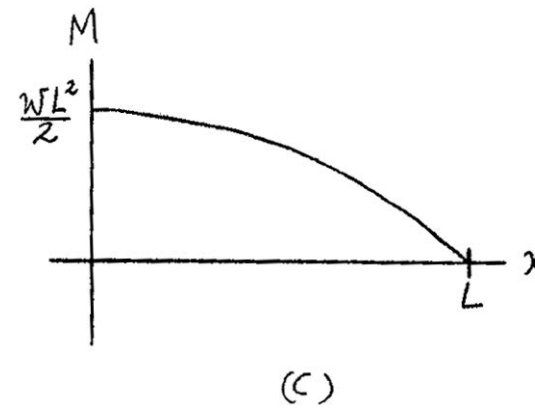

Ans:

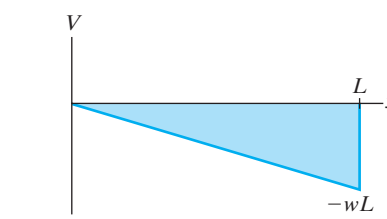

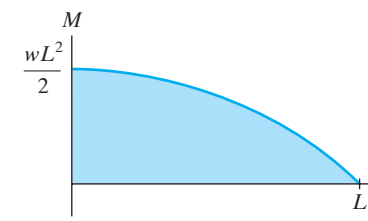

***6–32.** The smooth pin is supported by two leaves A and B and subjected to a compressive load of 0.4 kN/m caused by bar C. Determine the intensity of the distributed load w_0 of the leaves on the pin and draw the shear and moment diagram for the pin.

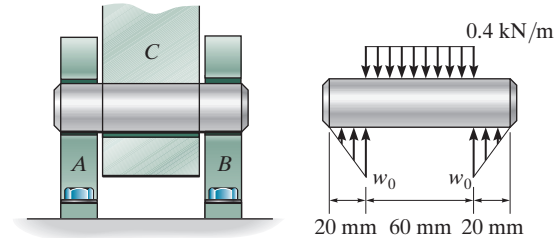

$$+\uparrow \Sigma F_y = 0; \qquad 2(w_0)(20)\left(\frac{1}{2}\right) - 60(0.4) = 0$$

$$w_0 = 1.2 \text{ kN/m}$$ **Ans.**

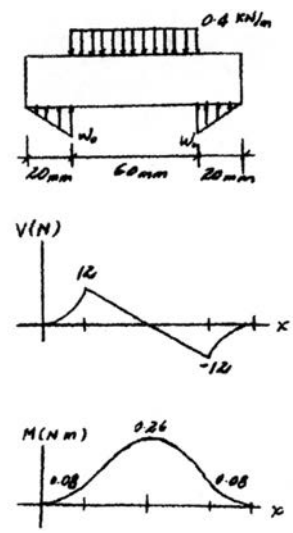

6–33. The shaft is supported by a smooth thrust bearing at A and smooth journal bearing at B. Draw the shear and moment diagrams for the shaft.

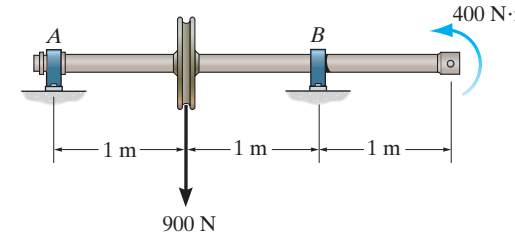

Equations of Equilibrium: Referring to the free-body diagram of the shaft shown in Fig. *a*,

$\circlearrowleft + \Sigma M_A = 0;$ $\quad B_y(2) + 400 - 900(1) = 0$

$B_y = 250 \text{ N}$

$+\uparrow \Sigma F_y = 0;$ $\quad A_y + 250 - 900 = 0$

$A_y = 650 \text{ N}$

Shear and Moment Diagram: As shown in Figs. *b* and *c*.

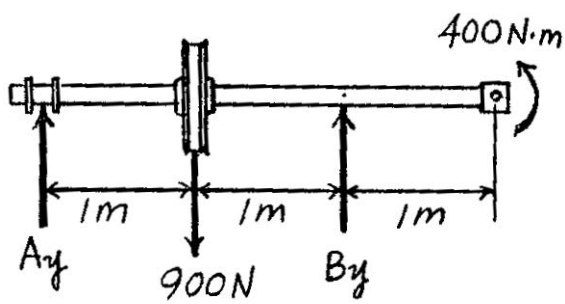

(a)

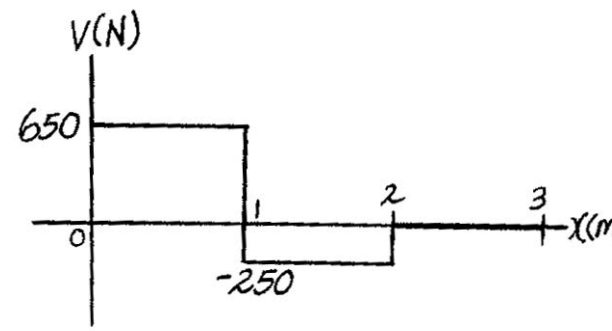

(b)

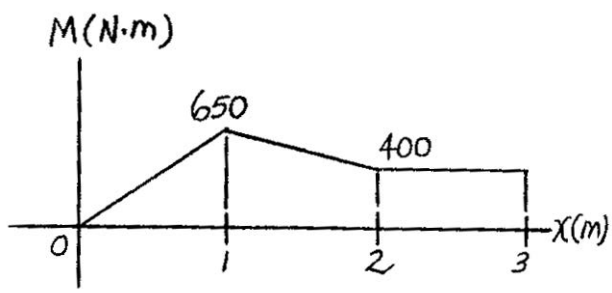

(c)

Ans:

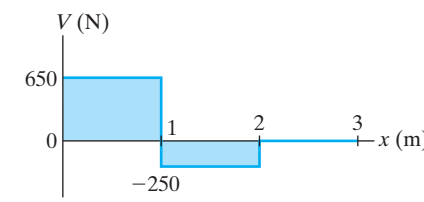

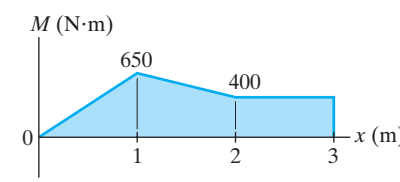

6–34. Draw the shear and moment diagrams for the cantilever beam.

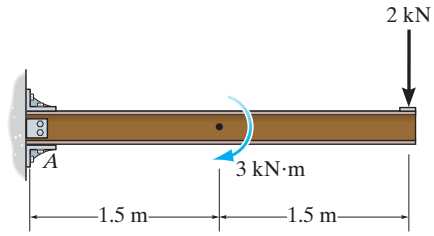

Equations of Equilibrium: Referring to the free-body diagram of the beam shown in Fig. *a*,

$+\uparrow \Sigma F_y = 0;$ $\quad A_y - 2 = 0$

$A_y = 2\text{ kN}$

$\circlearrowleft + \Sigma M_A = 0;$ $\quad M_A - 3 - 2(3) = 0$

$M_A = 9\text{ kN}\cdot\text{m}$

Shear and Moment Diagram: As shown in Figs. *b* and *c*.

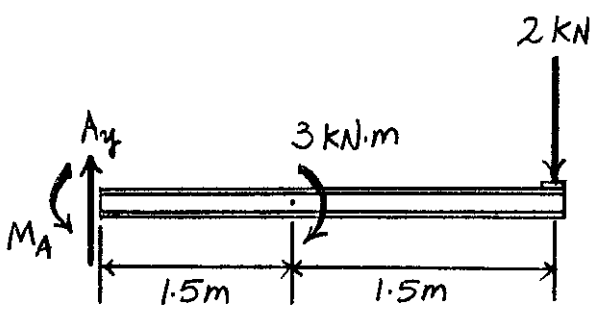

(a)

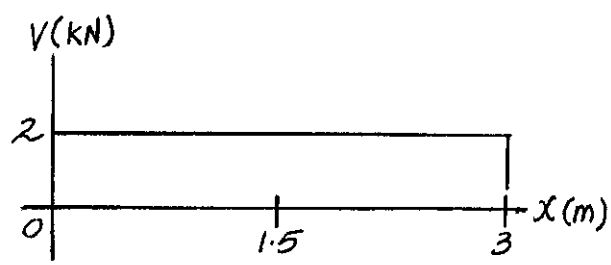

(b)

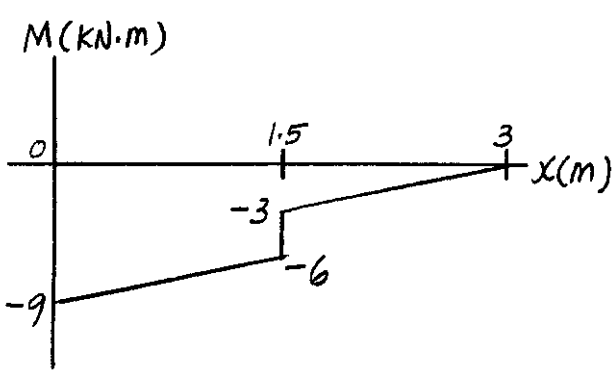

(c)

Ans:

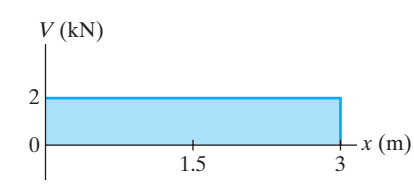

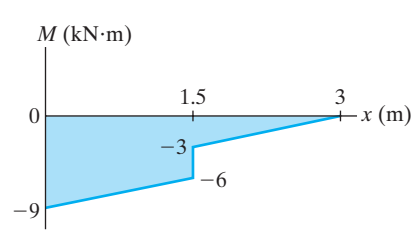

6–35. Draw the shear and moment diagrams for the beam and determine the shear and moment as functions of x.

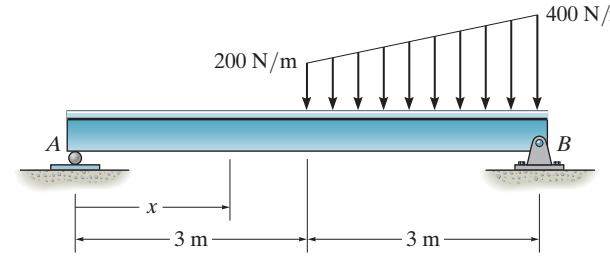

Support Reactions: As shown on FBD.

Shear and Moment Functions:

For $0 \le x < 3$ m:

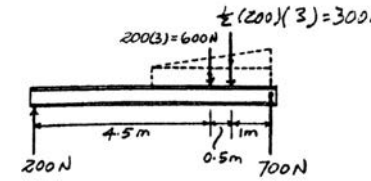

$$+\uparrow \Sigma F_y = 0; \qquad 200 - V = 0 \qquad V = 200 \text{ N}$$ **Ans.**

$$\circlearrowleft + \Sigma M_{NA} = 0; \qquad M - 200\,x = 0$$

$$M = \{200\,x\} \text{ N}\cdot\text{m}$$ **Ans.**

For $3 \text{ m} < x \le 6$ m:

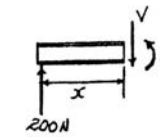

$$+\uparrow \Sigma F_y = 0; \qquad 200 - 200(x-3) - \frac{1}{2}\left[\frac{200}{3}(x-3)\right](x-3) - V = 0$$

$$V = \left\{-\frac{100}{3}x^2 + 500\right\} \text{N}$$ **Ans.**

Set $V = 0$, $x = 3.873$ m

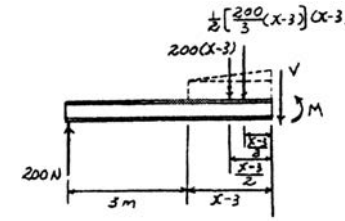

$$\circlearrowleft + \Sigma M_{NA} = 0; \qquad M + \frac{1}{2}\left[\frac{200}{3}(x-3)\right](x-3)\left(\frac{x-3}{3}\right)$$

$$+ 200(x-3)\left(\frac{x-3}{2}\right) - 200x = 0$$

$$M = \left\{-\frac{100}{9}x^3 + 500x - 600\right\} \text{N}\cdot\text{m}$$ **Ans.**

Substitute $x = 3.87$ m, $M = 691$ N·m

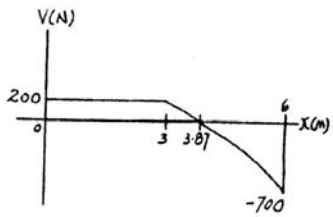

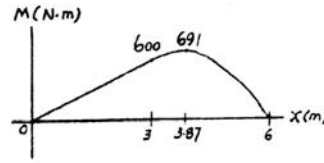

Ans:
For $0 \le x < 3$ m: $V = 200$ N, $M = (200x)$ N·m,
For $3 \text{ m} < x \le 6$ m: $V = \left\{-\frac{100}{3}x^2 + 500\right\}$ N,
$M = \left\{-\frac{100}{9}x^3 + 500x - 600\right\}$ N·m

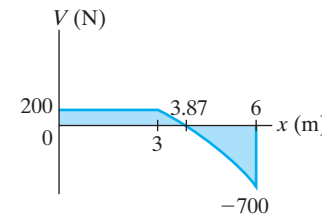

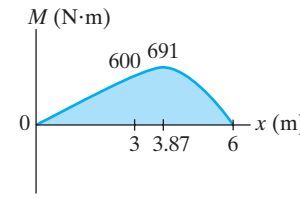

***6–36.** The shaft is supported by a smooth thrust bearing at A and a smooth journal bearing at B. Draw the shear and moment diagrams for the shaft.

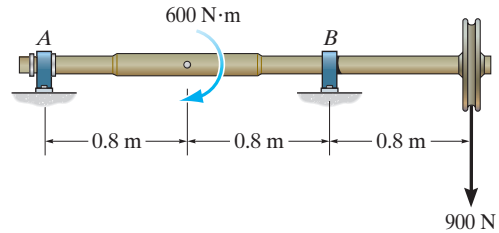

Equations of Equilibrium: Referring to the free-body diagram of the shaft shown in Fig. *a*,

$\circlearrowleft + \Sigma M_A = 0;$ $\quad B_y(1.6) - 600 - 900(2.4) = 0$

$B_y = 1725 \text{ N}$

$+\uparrow \Sigma F_y = 0;$ $\quad 1725 - 900 - A_y = 0$

$A_y = 825 \text{ N}$

Shear and Moment Diagram: As shown in Figs. *b* and *c*.

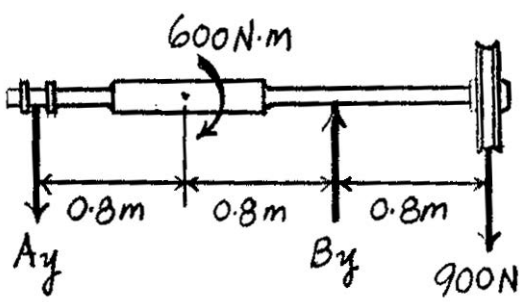

(a)

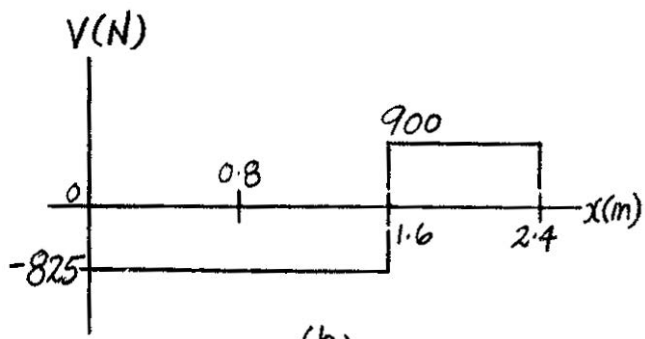

(b)

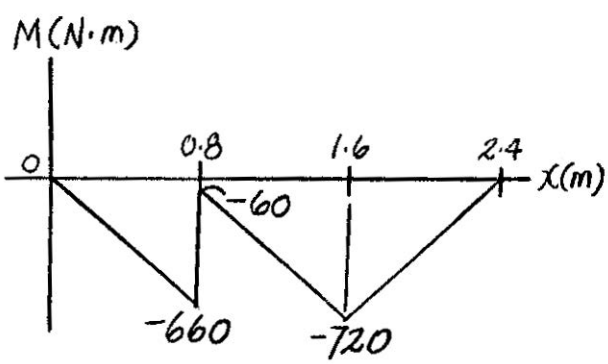

(c)

6–37. Draw the shear and moment diagrams for the beam.

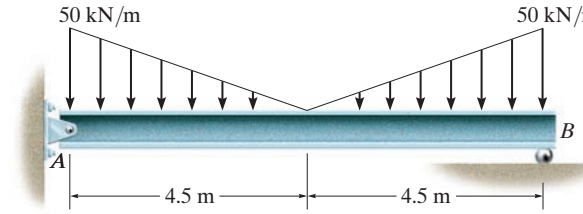

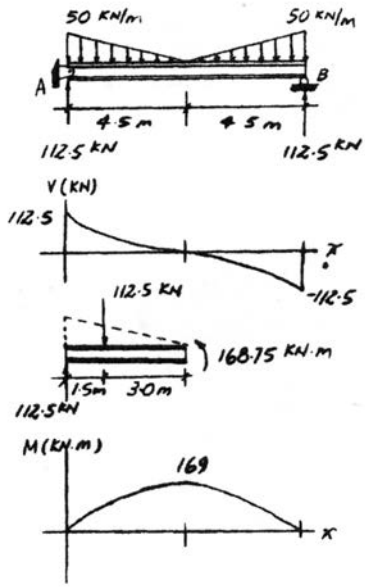

Ans:

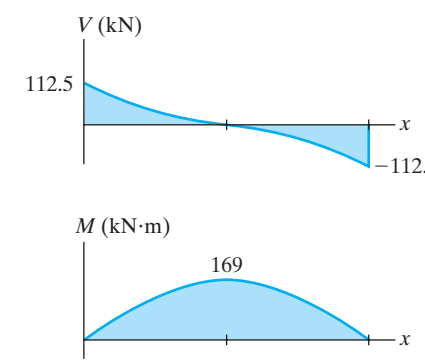

6–38. The beam is used to support a uniform load along CD due to the 6-kN weight of the crate. If the reaction at bearing support B can be assumed uniformly distributed along its width, draw the shear and moment diagrams for the beam.

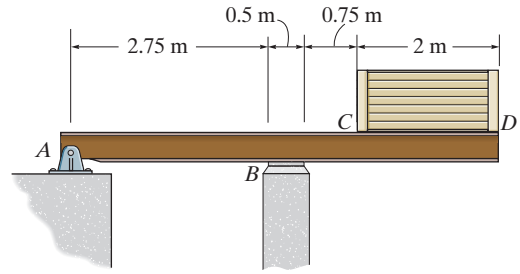

Equations of Equilibrium: Referring to the free-body diagram of the beam shown in Fig. *a*,

$\circlearrowleft + \Sigma M_A = 0;$ $\quad F_B(3) - 6(5) = 0$

$F_B = 10 \text{ kN}$

$+\uparrow \Sigma F_y = 0;$ $\quad 10 - 6 - A_y = 0$

$A_y = 4 \text{ kN}$

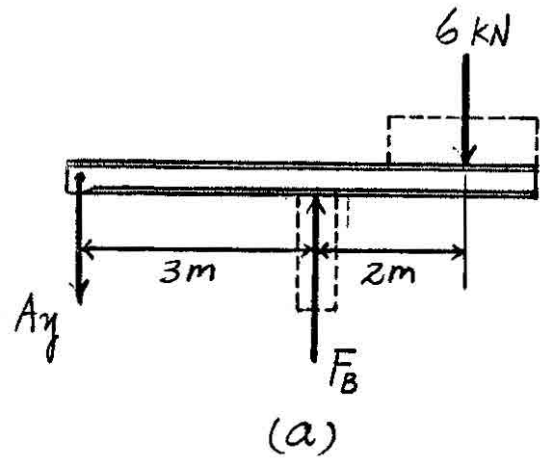

Shear and Moment Diagram: The intensity of the distributed load at support B and portion CD of the beam are $w_B = \frac{F_B}{0.5} = \frac{10}{0.5} = 20 \text{ kN/m}$ and $w_{CD} = \frac{6}{2} = 3 \text{ kN/m}$, Fig. *b*. The shear and moment diagrams are shown in Figs. *c* and *d*.

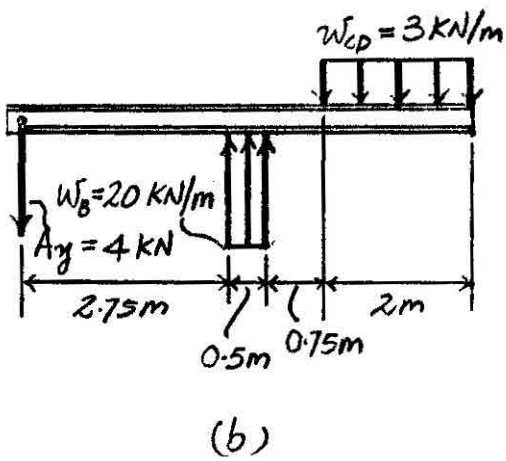

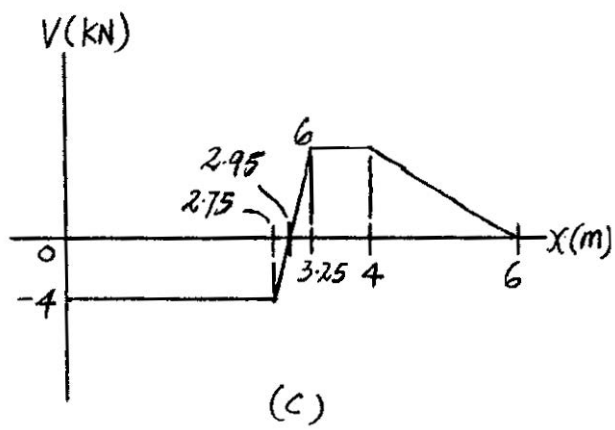

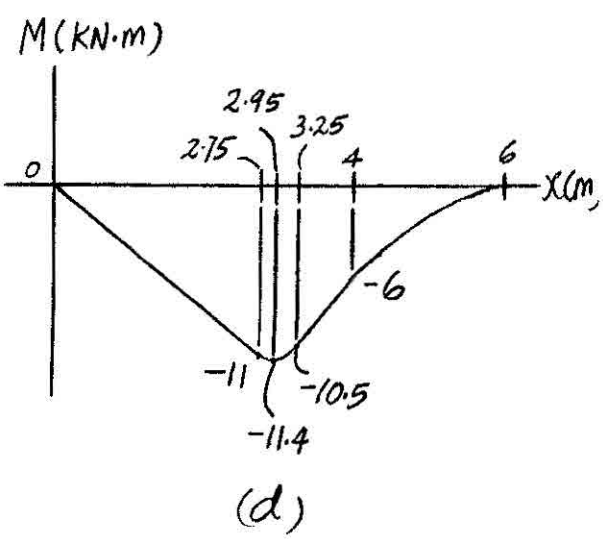

Ans:

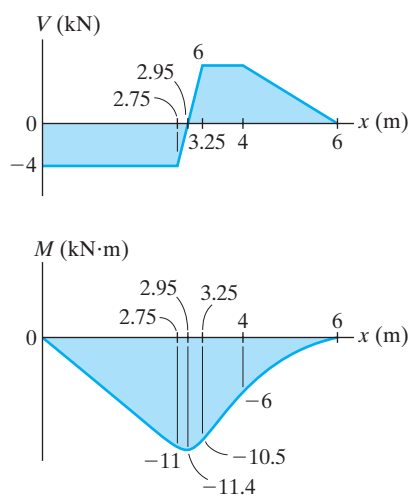

6–39. Draw the shear and moment diagrams for the double overhanging beam.

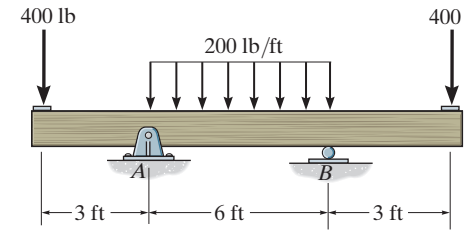

Equations of Equilibrium: Referring to the free-body diagram of the beam shown in Fig. *a*,

$\circlearrowleft + \Sigma M_A = 0;$ $\quad B_y(6) + 400(3) - 200(6)(3) - 400(9) = 0$

$B_y = 1000 \text{ lb}$

$+\uparrow \Sigma F_y = 0;$ $\quad A_y + 1000 - 400 - 200(6) - 400 = 0$

$A_y = 1000 \text{ lb}$

Shear and Moment Diagram: As shown in Figs. *b* and *c*.

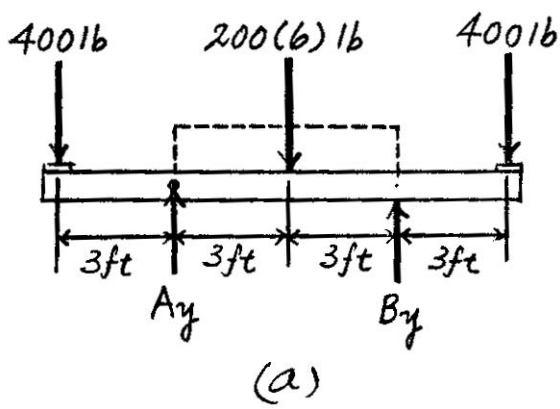

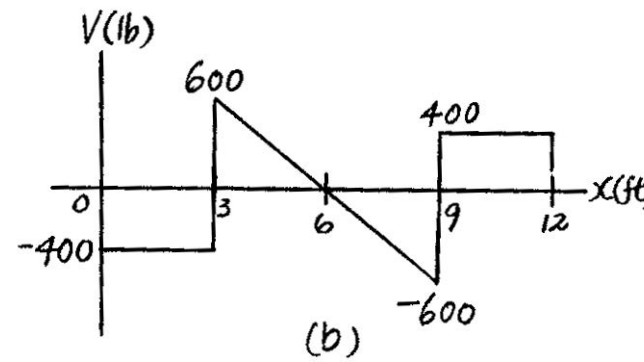

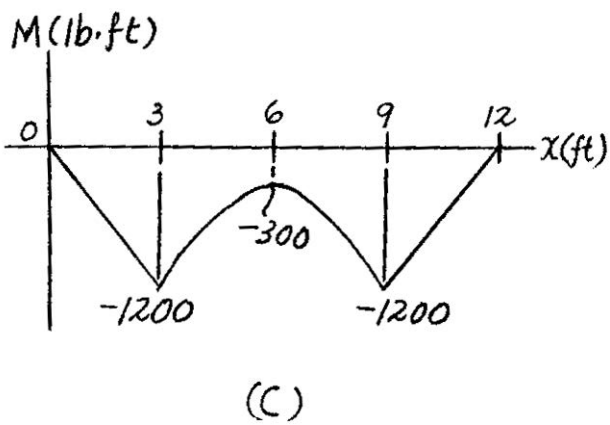

Ans:

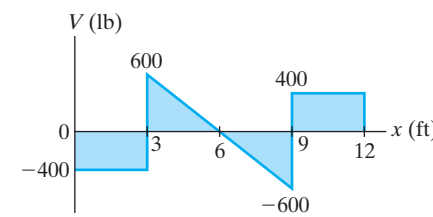

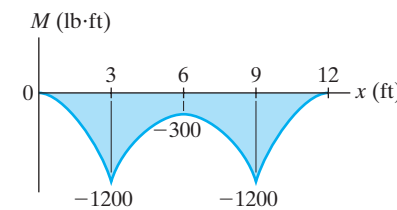

***6–40.** Draw the shear and moment diagrams for the simply supported beam.

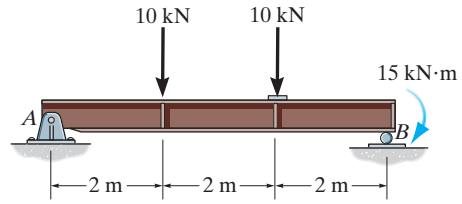

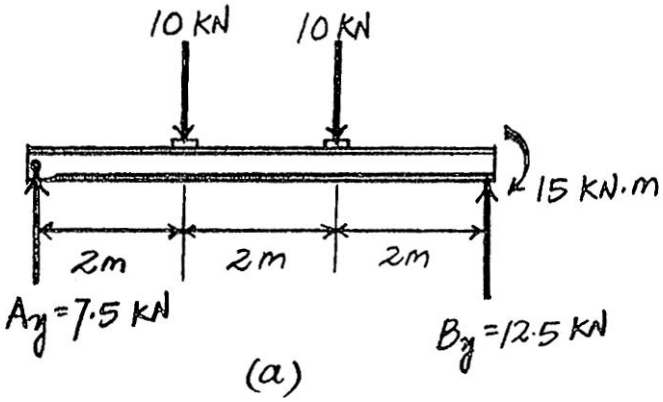

(a)

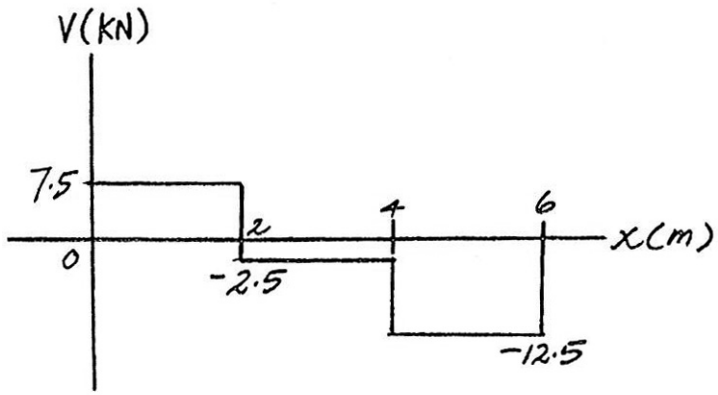

Shear diagram

(b)

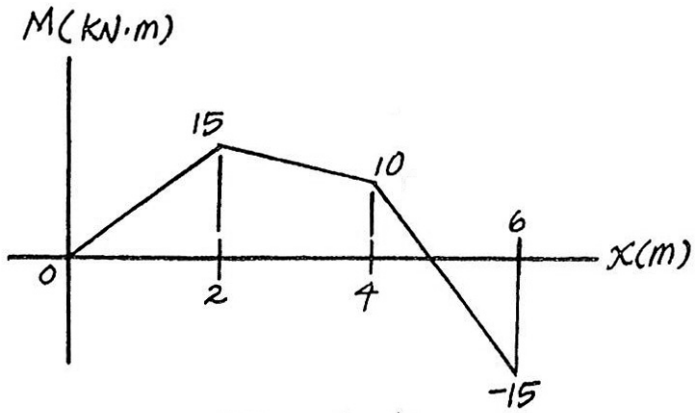

moment diagram

(c)

6–41. The compound beam is fixed at A, pin connected at B, and supported by a roller at C. Draw the shear and moment diagrams for the beam.

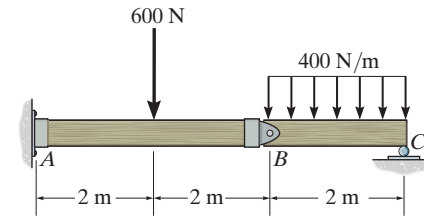

Support Reactions: Referring to the free-body diagram of segment BC shown in Fig. a,

$\circlearrowleft + \Sigma M_B = 0;$ $\quad C_y(2) - 400(2)(1) = 0$

$C_y = 400 \text{ N}$

$+\uparrow \Sigma F_y = 0;$ $\quad B_y + 400 - 400(2) = 0$

$B_y = 400 \text{ N}$

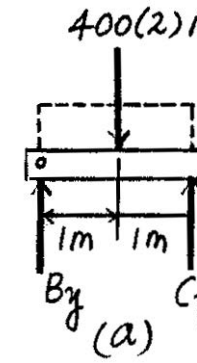

Using the result of $\mathbf{B}_y$ and referring to the free-body diagram of segment AB, Fig. b,

$+\uparrow \Sigma F_y = 0;$ $\quad A_y - 600 - 400 = 0$

$A_y = 1000 \text{ N}$

$\circlearrowleft + \Sigma M_A = 0;$ $\quad M_A - 600(2) - 400(4) = 0$

$M_A = 2800 \text{ N}$

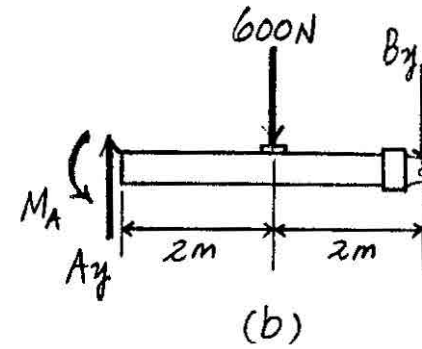

Shear and Moment Diagrams: As shown in Figs. c and d.

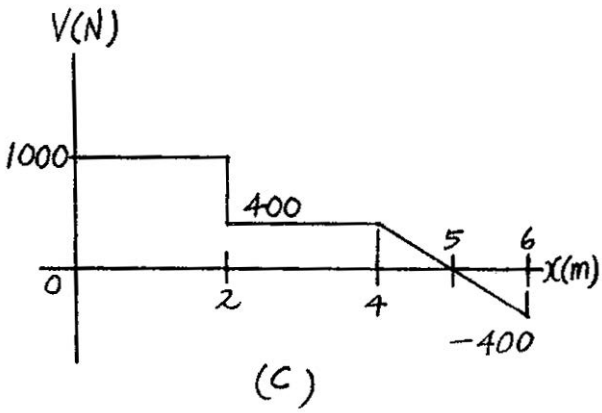

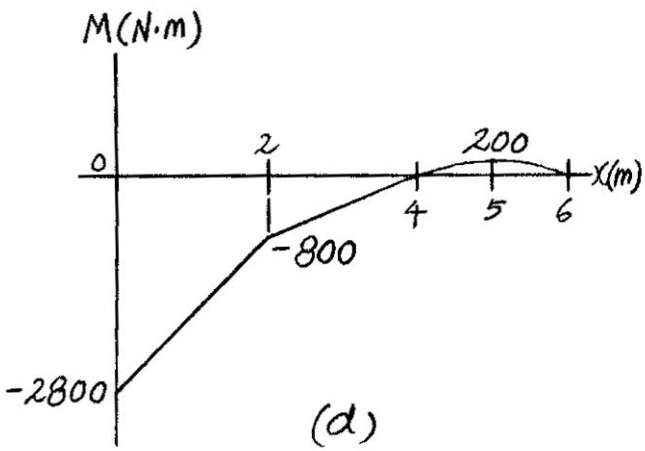

Ans:

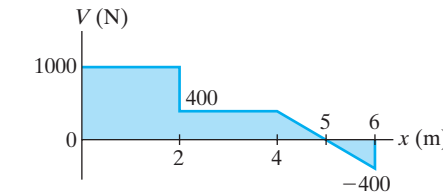

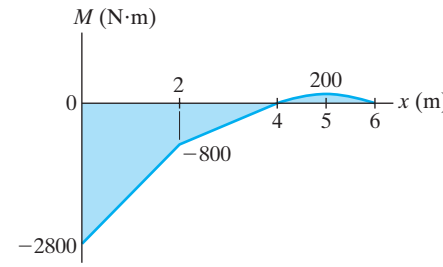

6–42. Draw the shear and moment diagrams for the compound beam.

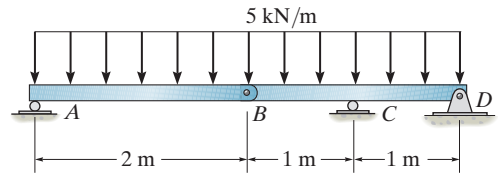

Support Reactions:

From the FBD of segment AB

$$\circlearrowleft + \Sigma M_A = 0; \qquad B_y(2) - 10.0(1) = 0 \qquad B_y = 5.00 \text{ kN}$$

$$+\uparrow \Sigma F_y = 0; \qquad A_y - 10.0 + 5.00 = 0 \qquad A_y = 5.00 \text{ kN}$$

From the FBD of segment BD

$$\circlearrowleft + \Sigma M_C = 0; \qquad 5.00(1) + 10.0(0) - D_y(1) = 0$$

$$D_y = 5.00 \text{ kN}$$

$$+\uparrow \Sigma F_y = 0; \qquad C_y - 5.00 - 5.00 - 10.0 = 0$$

$$C_y = 20.0 \text{ kN}$$

$$\overset{+}{\rightarrow} \Sigma F_x = 0; \qquad B_x = 0$$

From the FBD of segment AB

$$\overset{+}{\rightarrow} \Sigma F_x = 0; \qquad A_x = 0$$

Shear and Moment Diagram:

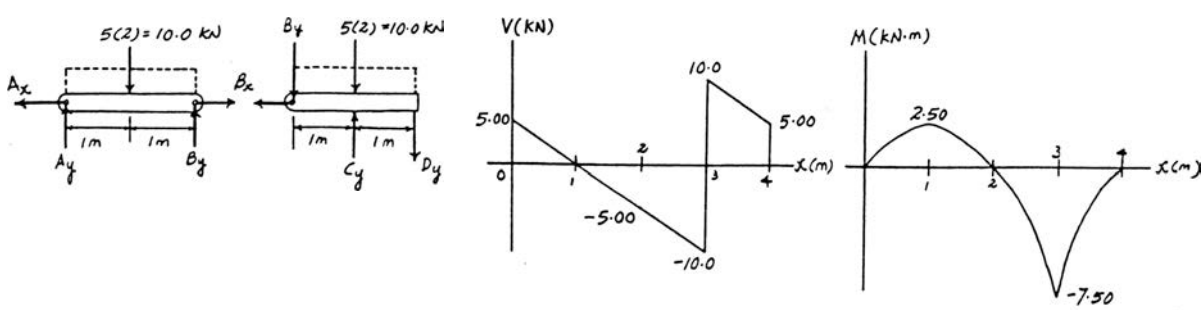

Ans:

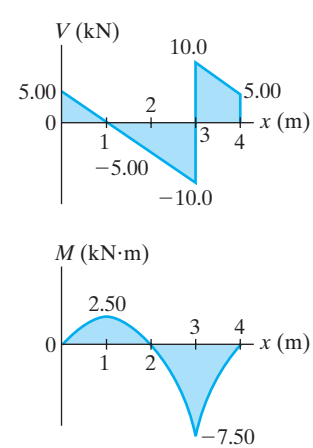

6–43. The compound beam is fixed at A, pin connected at B, and supported by a roller at C. Draw the shear and moment diagrams for the beam.

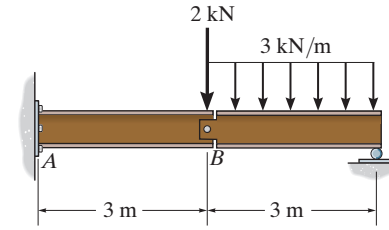

Support Reactions: Referring to the free-body diagram of segment BC shown in Fig. a,

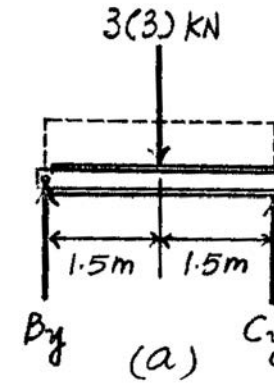

$\circlearrowleft + \Sigma M_B = 0;$ $\quad C_y(3) - 3(3)(1.5) = 0$

$C_y = 4.5 \text{ kN}$

$\uparrow \Sigma F_y = 0;$ $\quad B_y + 4.5 - 3(3) = 0$

$B_y = 4.5 \text{ kN}$

Using the result of $\mathbf{B}_y$ and referring to the free-body diagram of segment AB, Fig. b,

$\uparrow \Sigma F_y = 0;$ $\quad A_y - 2 - 4.5 = 0$

$A_y = 6.5 \text{ kN}$

$\circlearrowleft + \Sigma M_A = 0;$ $\quad M_A - 2(3) - 4.5(3) = 0$

$M_A = 19.5 \text{ kN} \cdot \text{m}$

Shear and Moment Diagrams: As shown in Figs. c and d.

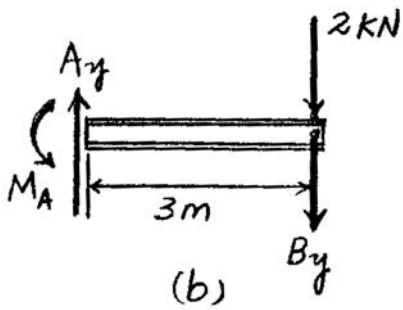

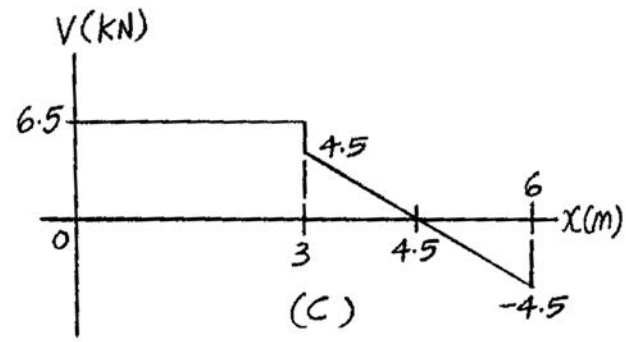

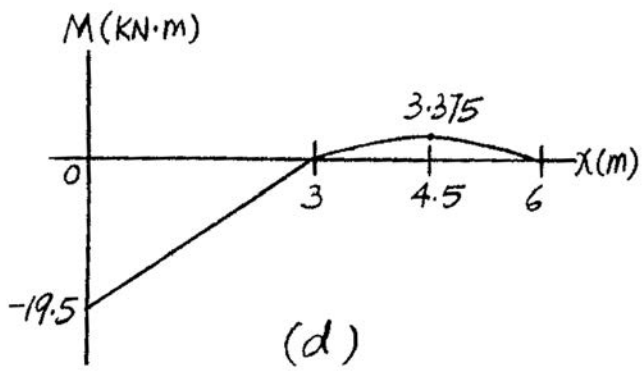

Ans:

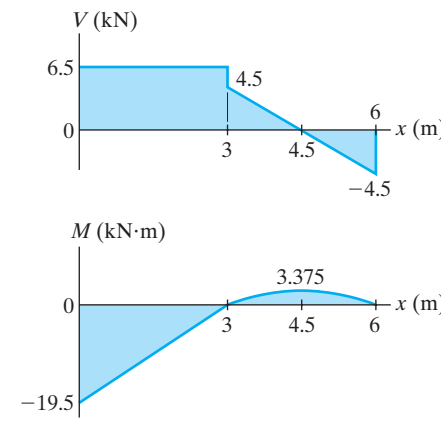

***6–44.** Draw the shear and moment diagrams for the beam.

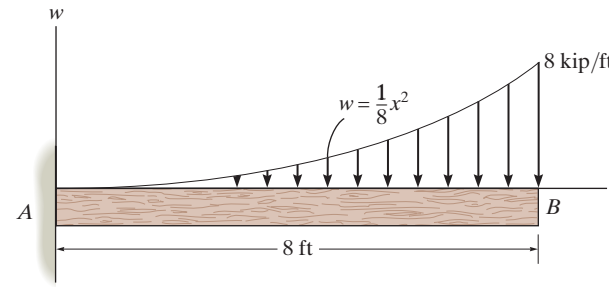

$$F_R = \frac{1}{8}\int_0^8 x^2 dx = 21.33 \text{ kip}$$

$$\bar{x} = \frac{\frac{1}{8}\int_0^8 x^3 dx}{21.33} = 6.0 \text{ ft}$$

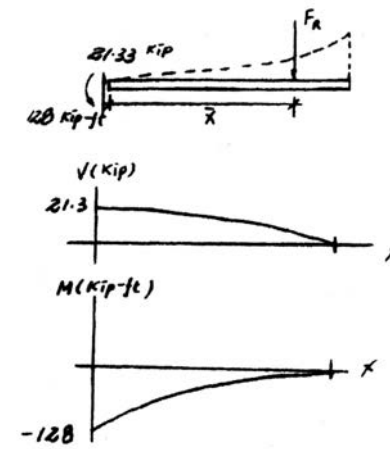

6–45. A short link at B is used to connect beams AB and BC to form the compound beam shown. Draw the shear and moment diagrams for the beam if the supports at A and B are considered fixed and pinned, respectively.

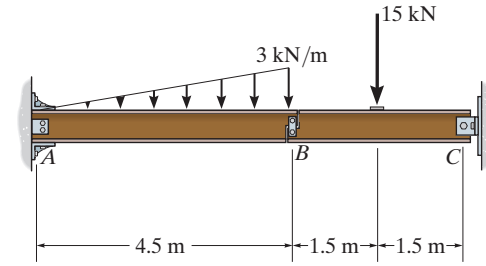

Support Reactions: Referring to the free-body diagram of segment BC shown in Fig. a,

$\circlearrowleft + \Sigma M_C = 0;$ $\quad 15(1.5) - F_B(3) = 0$

$F_B = 7.5 \text{ kN}$

$+\uparrow \Sigma F_y = 0;$ $\quad C_y + 7.5 - 15 = 0$

$C_y = 7.5 \text{ kN}$

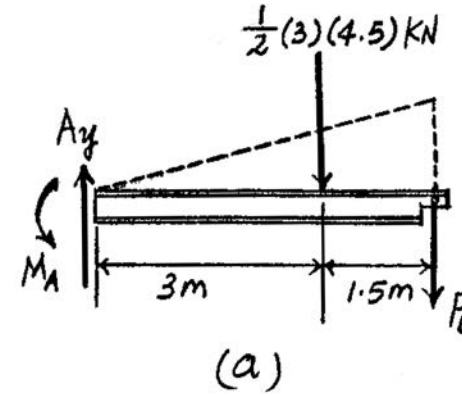

Using the result of $\mathbf{F}_B$ and referring to the free-body diagram of segment AB, Fig. b,

$+\uparrow \Sigma F_y = 0;$ $\quad A_y - \frac{1}{2}(3)(4.5) - 7.5 = 0$

$A_y = 14.25 \text{ kN}$

$\circlearrowleft + \Sigma M_A = 0;$ $\quad M_A - \frac{1}{2}(3)(4.5)(3) - 7.5(4.5) = 0$

$M_A = 54 \text{ kN} \cdot \text{m}$

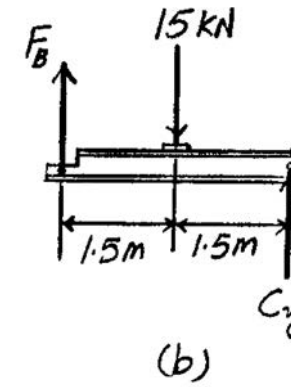

Shear and Moment Diagrams: As shown in Figs. c and d.

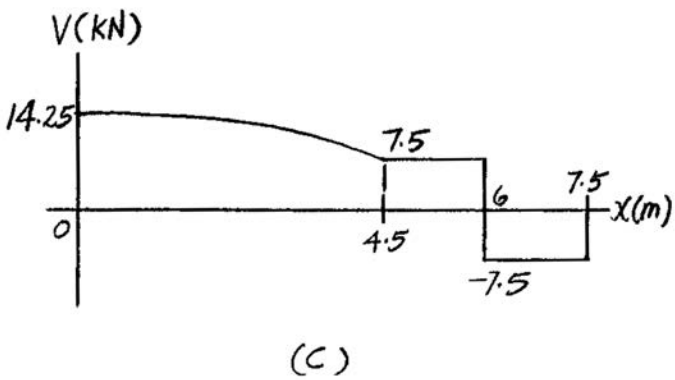

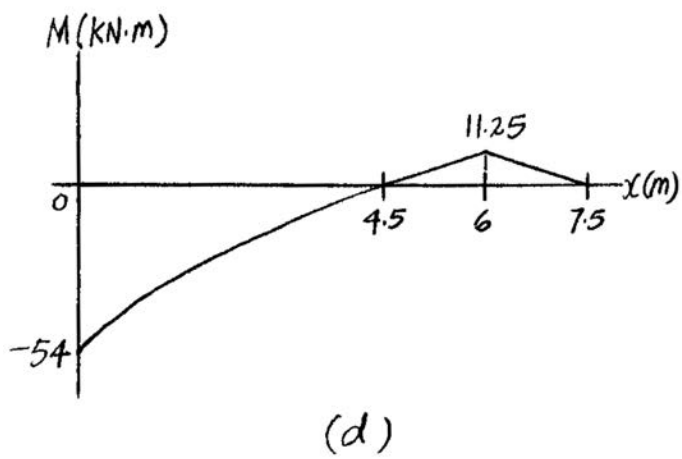

Ans:

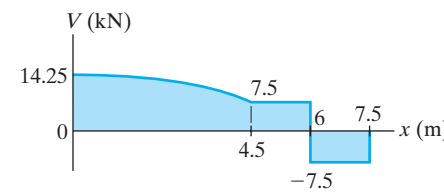

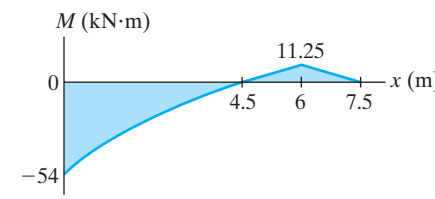

6–46. Determine the placement b of the hooks to minimize the largest moment when the concrete member is being hoisted. Draw the shear and moment diagrams. The member has a square cross section of dimension a on each side. The specific weight of concrete is γ.

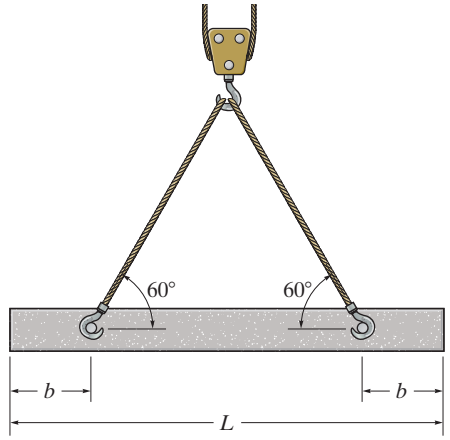

Support Reactions: The intensity of the uniform distributed load caused by its own weight is $w = \gamma a^2$. Due to symmetry,

$$+\uparrow \Sigma F_y = 0; \qquad 2F_y - \gamma a^2 L = 0$$

$$F_y = \frac{\gamma a^2 L}{2}$$

Absolute Minimum Moment: To obtain the absolute minimum moment, the maximum positive moment must be equal to the maximum negative moment. The maximum negative moment occurs at the supports. Referring to the free-body diagram of the beam segment shown in Fig. b,

$$\circlearrowleft + \Sigma M = 0; \qquad \gamma a^2 b\left(\frac{b}{2}\right) - M_{\max(-)} = 0$$

$$M_{\max(-)} = \frac{\gamma a^2 b^2}{2}$$

The maximum positive moment occurs between the supports. Referring to the free-body diagram of the beam segment shown in Fig. c,

$$+\uparrow \Sigma F_y = 0; \qquad \frac{\gamma a^2 L}{2} - \gamma a^2 x = 0 \qquad x = \frac{L}{2}$$

Using this result,

$$\circlearrowleft + \Sigma M = 0; \quad M_{\max(+)} + \gamma a^2\left(\frac{L}{2}\right)\left(\frac{L}{4}\right) - \frac{\gamma a^2 L}{2}\left(\frac{L}{2} - b\right) = 0$$

$$M_{\max(+)} = \frac{\gamma a^2 L}{8}(L - 4b)$$

It is required that

$$M_{\max(+)} = M_{\max(-)}$$

$$\frac{\gamma a^2 L}{8}(L - 4b) = \frac{\gamma a^2 b^2}{2}$$

$$4b^2 + 4Lb - L^2 = 0$$

Solving for the positive result,

$$b = 0.2071L = 0.207L \qquad \textbf{Ans.}$$

Shear and Moment Diagrams: Using the result for b, Fig. d, the shear and moment diagrams are shown in Figs. e and f.

6–46. Continued

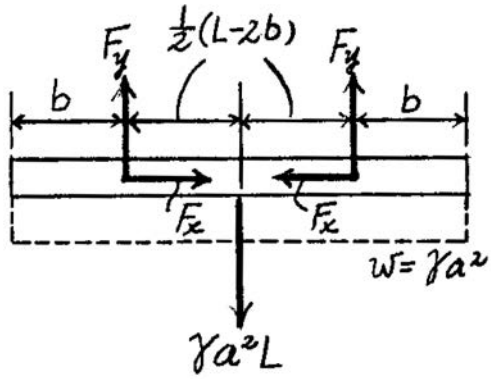

(a)

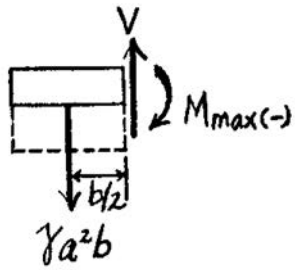

(b)

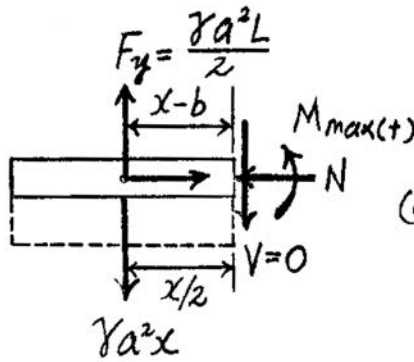

(c)

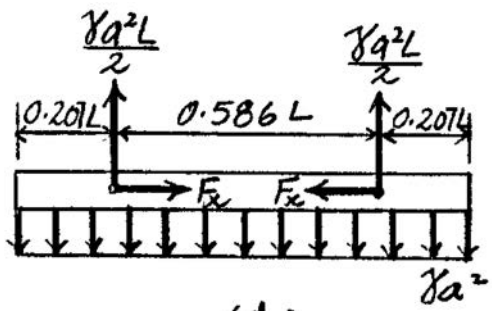

(d)

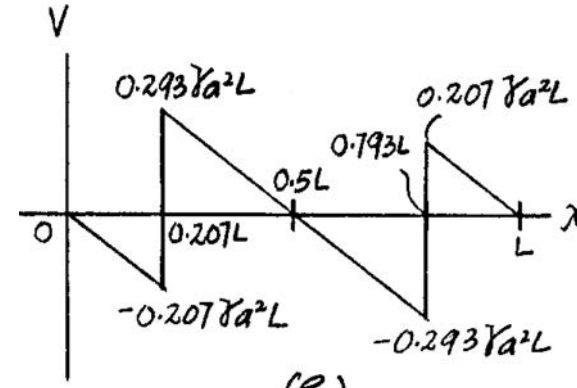

(e)

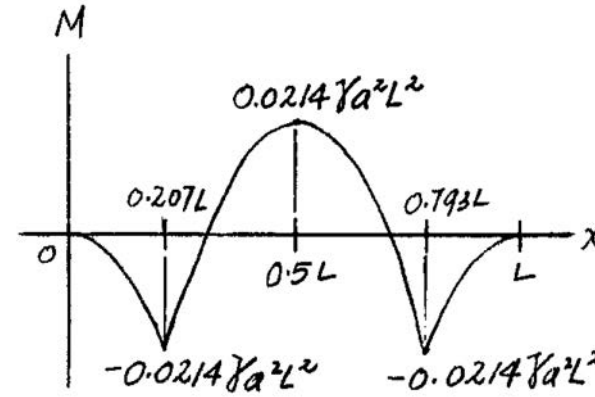

(f)

Ans:
$b = 0.207L$

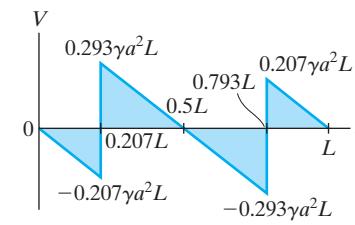

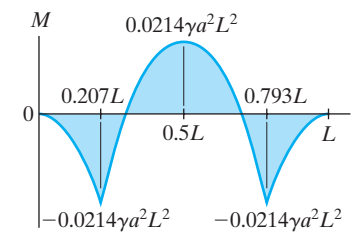

6–47. If the A-36 steel sheet roll is supported as shown and the allowable bending stress is 165 MPa, determine the smallest radius r of the spool if the steel sheet has a width of 1 m and a thickness of 1.5 mm. Also, find the corresponding maximum internal moment developed in the sheet.

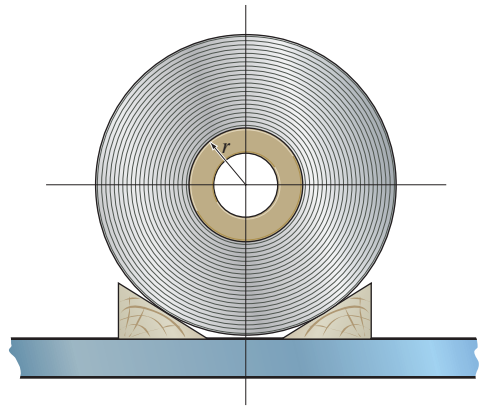

Bending Stress-Curvature Relation:

$$\sigma_{\text{allow}} = \frac{Ec}{\rho}; \qquad 165(10^6) = \frac{200(10^9)[0.75(10^{-3})]}{r}$$

$$r = 0.9091 \text{ m} = 909 \text{ mm}$$ **Ans.**

Moment Curvature Relation:

$$\frac{1}{\rho} = \frac{M}{EI}; \qquad \frac{1}{0.9091} = \frac{M}{200(10^9)\left[\frac{1}{12}(1)(0.0015^3)\right]}$$

$$M = 61.875 \text{ N}\cdot\text{m} = 61.9 \text{ N}\cdot\text{m}$$ **Ans.**

Ans:
$r = 909$ mm, $M = 61.9$ N · m

***6–48.** Determine the moment M that will produce a maximum stress of 10 ksi on the cross section.

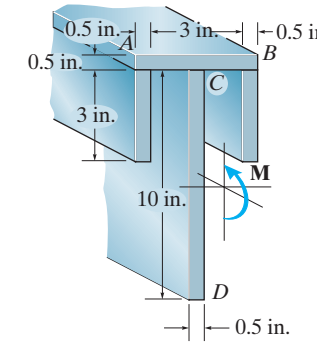

Section Properties:

$$\bar{y} = \frac{\Sigma\, \tilde{y}A}{\Sigma A}$$

$$= \frac{0.25(4)(0.5) + 2[2(3)(0.5)] + 5.5(10)(0.5)}{4(0.5) + 2[(3)(0.5)] + 10(0.5)} = 3.40 \text{ in.}$$

$$I_{NA} = \frac{1}{12}(4)(0.5^3) + 4(0.5)(3.40 - 0.25)^2$$

$$+ 2\left[\frac{1}{12}(0.5)(3^3) + 0.5(3)(3.40 - 2)^2\right]$$

$$+ \frac{1}{12}(0.5)(10^3) + 0.5(10)(5.5 - 3.40)^2$$

$$= 91.73 \text{ in}^4$$

Maximum Bending Stress: Applying the flexure formula

$$\sigma_{\max} = \frac{Mc}{I}$$

$$10 = \frac{M\,(10.5 - 3.4)}{91.73}$$

$$M = 129.2 \text{ kip} \cdot \text{in} = 10.8 \text{ kip} \cdot \text{ft}$$ **Ans.**

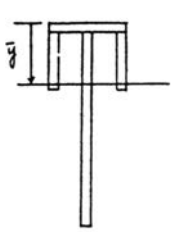

6–49. Determine the maximum tensile and compressive bending stress in the beam if it is subjected to a moment of $M = 4\ \text{kip}\cdot\text{ft}$.

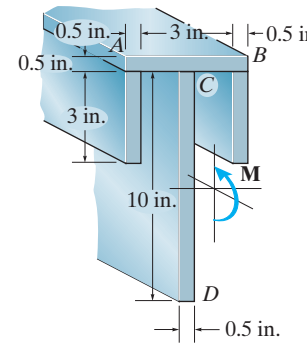

Section Properties:

$$\bar{y} = \frac{\Sigma\,\tilde{y}A}{\Sigma A}$$

$$= \frac{0.25(4)(0.5) + 2[2(3)(0.5)] + 5.5(10)(0.5)}{4(0.5) + 2[(3)(0.5)] + 10(0.5)} = 3.40\ \text{in.}$$

$$I_{NA} = \frac{1}{12}(4)(0.5^3) + 4(0.5)(3.40 - 0.25)^2 + 2\left[\frac{1}{12}(0.5)(3^3) + 0.5(3)(3.40 - 2)^2\right] + \frac{1}{12}(0.5)(10^3) + 0.5(10)(5.5 - 3.40)^2$$

$$= 91.73\ \text{in}^4$$

Maximum Bending Stress: Applying the flexure formula $\sigma_{\max} = \dfrac{Mc}{I}$

$$(\sigma_t)_{\max} = \frac{4(10^3)(12)(10.5 - 3.40)}{91.73} = 3715.12\ \text{psi} = 3.72\ \text{ksi} \qquad \textbf{Ans.}$$

$$(\sigma_c)_{\max} = \frac{4(10^3)(12)(3.40)}{91.73} = 1779.07\ \text{psi} = 1.78\ \text{ksi} \qquad \textbf{Ans.}$$

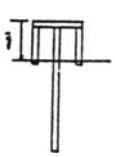

Ans:
$(\sigma_t)_{\max} = 3.72\ \text{ksi},\ (\sigma_c)_{\max} = 1.78\ \text{ksi}$

6–50. A member has the triangular cross section shown. Determine the largest internal moment M that can be applied to the cross section without exceeding allowable tensile and compressive stresses of $(\sigma_{\text{allow}})_t = 22$ ksi and $(\sigma_{\text{allow}})_c = 15$ ksi, respectively.

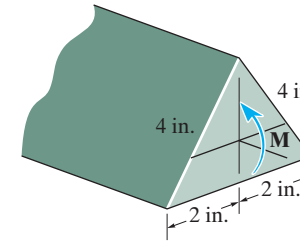

$$\bar{y}(\text{From base}) = \frac{1}{3}\sqrt{4^2 - 2^2} = 1.1547 \text{ in.}$$

$$I = \frac{1}{36}(4)(\sqrt{4^2 - 2^2})^3 = 4.6188 \text{ in}^4$$

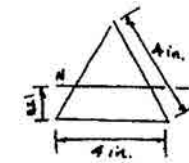

Assume failure due to tensile stress:

$$\sigma_{\max} = \frac{My}{I}; \qquad 22 = \frac{M(1.1547)}{4.6188}$$

$$M = 88.0 \text{ kip} \cdot \text{in.} \quad = 7.33 \text{ kip} \cdot \text{ft}$$

Assume failure due to compressive stress:

$$\sigma_{\max} = \frac{Mc}{I}; \qquad 15 = \frac{M(3.4641 - 1.1547)}{4.6188}$$

$$M = 30.0 \text{ kip} \cdot \text{in.} = 2.50 \text{ kip} \cdot \text{ft} \quad \text{(controls)}$$ **Ans.**

Ans:
$M = 2.50 \text{ kip} \cdot \text{ft}$

6–51. A member has the triangular cross section shown. If a moment of $M = 800\ \text{lb}\cdot\text{ft}$ is applied to the cross section, determine the maximum tensile and compressive bending stresses in the member. Also, sketch a three-dimensional view of the stress distribution action over the cross section.

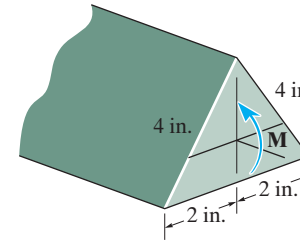

$$h = \sqrt{4^2 - 2^2} = 3.4641\ \text{in.}$$

$$I_x = \frac{1}{36}(4)(3.4641)^3 = 4.6188\ \text{in}^4$$

$$c = \frac{2}{3}(3.4641) = 2.3094\ \text{in.}$$

$$y = \frac{1}{3}(3.4641) = 1.1547\ \text{in.}$$

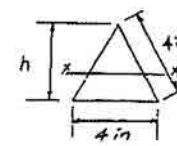

$$(\sigma_{\max})_t = \frac{My}{I} = \frac{800(12)(1.1547)}{4.6188} = 2.40\ \text{ksi}$$ **Ans.**

$$(\sigma_{\max})_c = \frac{Mc}{I} = \frac{800(12)(2.3094)}{4.6188} = 4.80\ \text{ksi}$$ **Ans.**

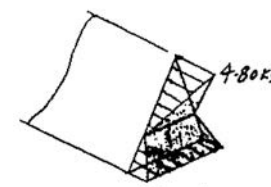

Ans:
$(\sigma_{\max})_t = 2.40$ ksi, $(\sigma_{\max})_t = 4.80$ ksi

***6–52.** If the beam is subjected to an internal moment of $M = 30\ \text{kN}\cdot\text{m}$, determine the maximum bending stress in the beam. The beam is made from A992 steel. Sketch the bending stress distribution on the cross section.

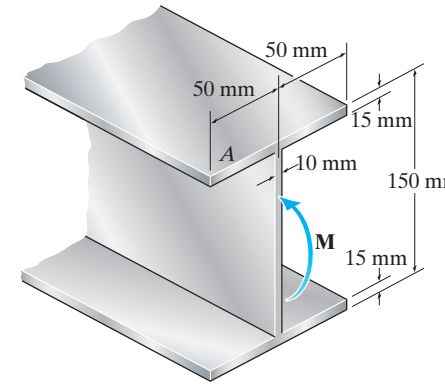

Section Properties: The moment of inertia of the cross section about the neutral axis is

$$I = \frac{1}{12}(0.1)(0.15^3) - \frac{1}{12}(0.09)(0.12^3) = 15.165(10^{-6})\ \text{m}^4$$

Maximum Bending Stress: The maximum bending stress occurs at the top and bottom surfaces of the beam since they are located at the furthest distance from the neutral axis. Thus, $c = 75\ \text{mm} = 0.075\ \text{m}$.

$$\sigma_{\max} = \frac{Mc}{I} = \frac{30(10^3)(0.075)}{15.165(10^{-6})} = 148\ \text{MPa} \qquad \textbf{Ans.}$$

At $y = 60\ \text{mm} = 0.06\ \text{m}$,

$$\sigma\big|_{y=0.06\ \text{m}} = \frac{My}{I} = \frac{30(10^3)(0.06)}{15.165(10^{-6})} = 119\ \text{MPa}$$

The bending stress distribution across the cross section is shown in Fig. *a*.

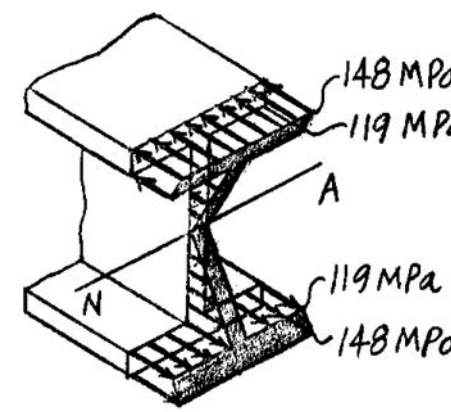

(a)

6–53. If the beam is subjected to an internal moment of $M = 30\ \text{kN}\cdot\text{m}$, determine the resultant force caused by the bending stress distribution acting on the top flange A.

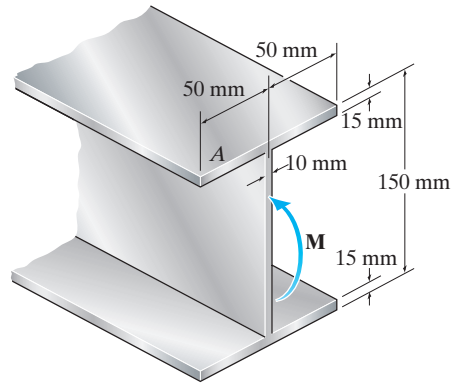

Section Properties: The moment of inertia of the cross section about the neutral axis is

$$I = \frac{1}{12}(0.1)(0.15^3) - \frac{1}{12}(0.09)(0.12^3) = 15.165(10^{-6})\ \text{m}^4$$

Bending Stress: The distance from the neutral axis to the top and bottom surfaces of flange A is $y_t = 75\ \text{mm} = 0.075\ \text{m}$ and $y_b = 60\ \text{mm} = 0.06\ \text{m}$.

$$\sigma_t = \frac{My_t}{I} = \frac{30(10^3)(0.075)}{15.165(10^{-6})} = 148.37 = 148\ \text{MPa}$$

$$\sigma_b = \frac{My_b}{I} = \frac{30(10^3)(0.06)}{15.165(10^{-6})} = 118.69 = 119\ \text{MPa}$$

Resultant Force: The resultant force acting on flange A is equal to the volume of the trapezoidal stress block shown in Fig. a. Thus,

$$F_R = \frac{1}{2}(148.37 + 118.69)(10^6)(0.1)(0.015)$$

$$= 200\,296.74\ \text{N} = 200\ \text{kN}$$ **Ans.**

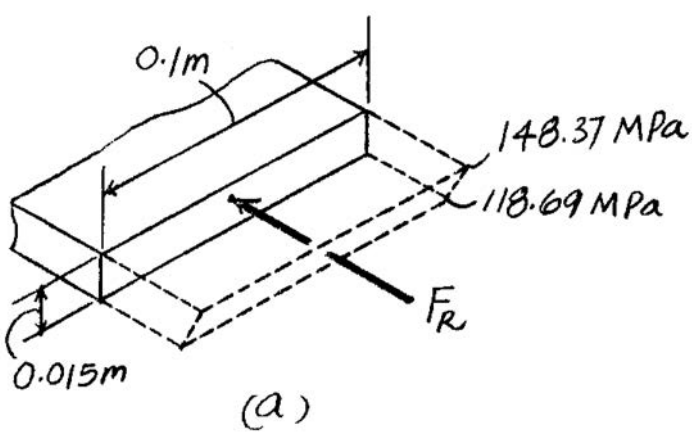

Ans:
$F_R = 200\ \text{kN}$

6–54. If the built-up beam is subjected to an internal moment of $M = 75\ \text{kN}\cdot\text{m}$, determine the maximum tensile and compressive stress acting in the beam.

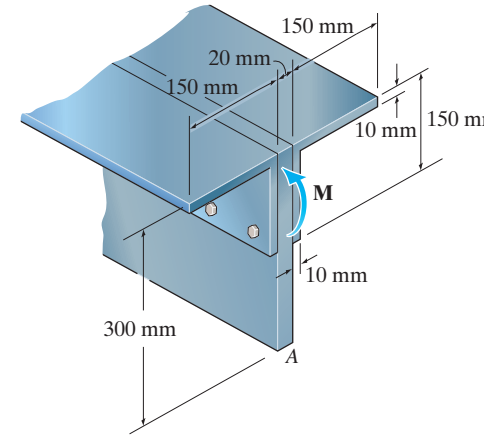

Section Properties: The neutral axis passes through centroid C of the cross section as shown in Fig. a. The location of C is

$$\bar{y} = \frac{\Sigma \tilde{y} A}{\Sigma A} = \frac{0.15(0.3)(0.02) + 2[0.225(0.15)(0.01)] + 2[0.295(0.01)(0.14)]}{0.3(0.02) + 2(0.15)(0.01) + 2(0.01)(0.14)} = 0.2035\ \text{m}$$

Thus, the moment of inertia of the cross section about the neutral axis is

$$\begin{aligned} I &= \Sigma \bar{I} + Ad^2 \\ &= \frac{1}{12}(0.02)(0.3^3) + 0.02(0.3)(0.2035 - 0.15)^2 \\ &\qquad + 2\left[\frac{1}{12}(0.01)(0.15^3) + 0.01(0.15)(0.225 - 0.2035)^2\right] \\ &\qquad + 2\left[\frac{1}{12}(0.14)(0.01^3) + 0.14(0.01)(0.295 - 0.2035)^2\right] \\ &= 92.6509(10^{-6})\ \text{m}^4 \end{aligned}$$

Maximum Bending Stress: The maximum compressive and tensile stress occurs at the top and bottom-most fiber of the cross section.

$$(\sigma_{\max})_c = \frac{My}{I} = \frac{75(10^3)(0.3 - 0.2035)}{92.6509(10^{-6})} = 78.1\ \text{MPa} \qquad \textbf{Ans.}$$

$$(\sigma_{\max})_t = \frac{Mc}{I} = \frac{75(10^3)(0.2035)}{92.6509(10^{-6})} = 165\ \text{MPa} \qquad \textbf{Ans.}$$

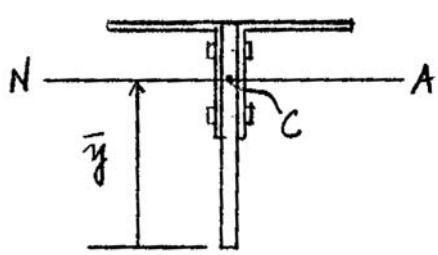

(a)

Ans:
$(\sigma_{\max})_c = 78.1\ \text{MPa}$, $(\sigma_{\max})_t = 165\ \text{MPa}$

6–55. If the built-up beam is subjected to an internal moment of $M = 75\ \text{kN}\cdot\text{m}$, determine the amount of this internal moment resisted by plate A.

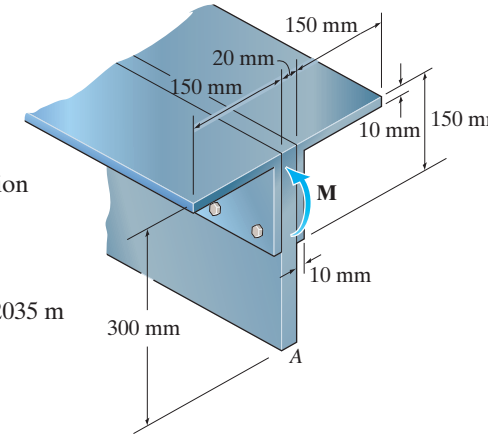

Section Properties: The neutral axis passes through centroid C of the cross section as shown in Fig. a. The location of C is

$$\bar{y} = \frac{\Sigma \tilde{y} A}{\Sigma A} = \frac{0.15(0.3)(0.02) + 2[0.225(0.15)(0.01)] + 2[0.295(0.01)(0.14)]}{0.3(0.02) + 2(0.15)(0.01) + 2(0.01)(0.14)} = 0.2035\ \text{m}$$

Thus, the moment of inertia of the cross section about the neutral axis is

$$\begin{aligned} I &= \bar{I} + Ad^2 \\ &= \frac{1}{12}(0.02)(0.3^3) + 0.02(0.3)(0.2035 - 0.15)^2 \\ &\quad + 2\left[\frac{1}{12}(0.01)(0.15^3) + 0.01(0.15)(0.225 - 0.2035)^2\right] \\ &\quad + 2\left[\frac{1}{12}(0.14)(0.01^3) + 0.14(0.01)(0.295 - 0.2035)^2\right] \\ &= 92.6509(10^{-6})\ \text{m}^4 \end{aligned}$$

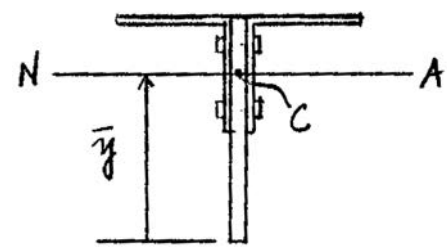

(a)

Bending Stress: The distance from the neutral axis to the top and bottom of plate A is $y_t = 0.3 - 0.2035 = 0.0965$ m and $y_b = 0.2035$ m.

$$\sigma_t = \frac{My_t}{I} = \frac{75(10^3)(0.0965)}{92.6509(10^{-6})} = 78.14\ \text{MPa (C)}$$

$$\sigma_b = \frac{My_b}{I} = \frac{75(10^3)(0.2035)}{92.6509(10^{-6})} = 164.71\ \text{MPa (T)}$$

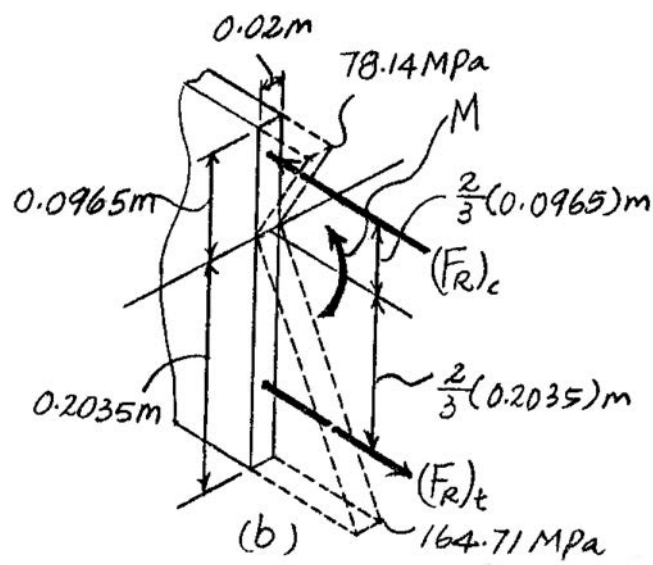

(b)

The bending stress distribution across the cross section of plate A is shown in Fig. b. The resultant forces of the tensile and compressive triangular stress blocks are

$$(F_R)_t = \frac{1}{2}(164.71)(10^6)(0.2035)(0.02) = 335\,144.46\ \text{N}$$

$$(F_R)_c = \frac{1}{2}(78.14)(10^6)(0.0965)(0.02) = 75\,421.50\ \text{N}$$

Thus, the amount of internal moment resisted by plate A is

$$\begin{aligned} M &= 335144.46\left[\frac{2}{3}(0.2035)\right] + 75421.50\left[\frac{2}{3}(0.0965)\right] \\ &= 50315.65\ \text{N}\cdot\text{m} = 50.3\ \text{kN}\cdot\text{m} \end{aligned}$$ **Ans.**

Ans:
$M = 50.3\ \text{kN}\cdot\text{m}$

***6–56.** The aluminum strut has a cross-sectional area in the form of a cross. If it is subjected to the moment $M = 8\ \text{kN}\cdot\text{m}$, determine the bending stress acting at points A and B, and show the results acting on volume elements located at these points.

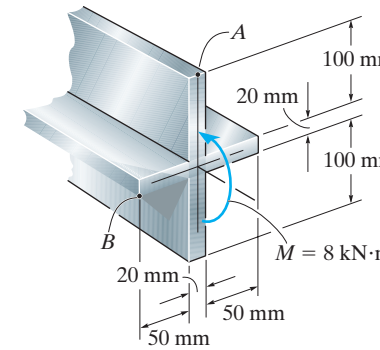

Section Property:

$$I = \frac{1}{12}(0.02)(0.22^3) + \frac{1}{12}(0.1)(0.02^3) = 17.8133(10^{-6})\ \text{m}^4$$

Bending Stress: Applying the flexure formula $\sigma = \dfrac{My}{I}$

$$\sigma_A = \frac{8(10^3)(0.11)}{17.8133(10^{-6})} = 49.4\ \text{MPa (C)} \qquad \textbf{Ans.}$$

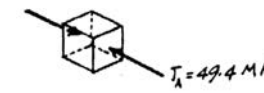

$$\sigma_B = \frac{8(10^3)(0.01)}{17.8133(10^{-6})} = 4.49\ \text{MPa (T)} \qquad \textbf{Ans.}$$

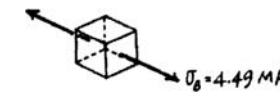

6–57. The aluminum strut has a cross-sectional area in the form of a cross. If it is subjected to the moment $M = 8\ \text{kN}\cdot\text{m}$, determine the maximum bending stress in the beam, and sketch a three-dimensional view of the stress distribution acting over the entire cross-sectional area.

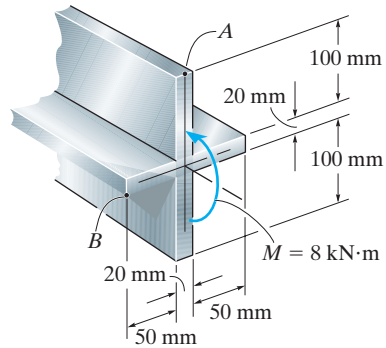

Section Property:

$$I = \frac{1}{12}(0.02)(0.22^3) + \frac{1}{12}(0.1)(0.02^3) = 17.8133(10^{-6})\ \text{m}^4$$

Bending Stress: Applying the flexure formula $\sigma_{\max} = \dfrac{Mc}{I}$ and $\sigma = \dfrac{My}{I}$,

$$\sigma_{\max} = \frac{8(10^3)(0.11)}{17.8133(10^{-6})} = 49.4\ \text{MPa} \qquad \textbf{Ans.}$$

$$\sigma_{y=0.01\text{m}} = \frac{8(10^3)(0.01)}{17.8133(10^{-6})} = 4.49\ \text{MPa}$$

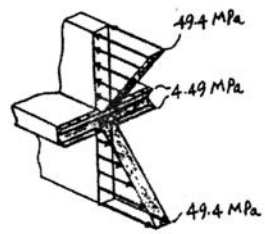

Ans:
$\sigma_{\max} = 49.4\ \text{MPa}$

6–58. The aluminum machine part is subjected to a moment of $M = 75\ \text{kN}\cdot\text{m}$. Determine the bending stress created at points B and C on the cross section. Sketch the results on a volume element located at each of these points.

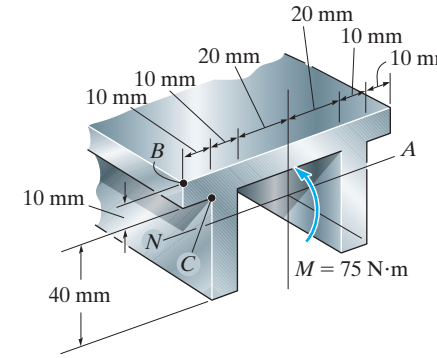

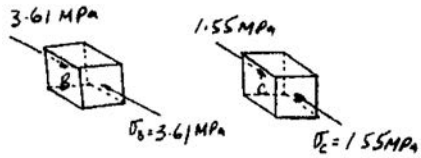

$$\bar{y} = \frac{0.005(0.08)(0.01) + 2[0.03(0.04)(0.01)]}{0.08(0.01) + 2(0.04)(0.01)} = 0.0175\ \text{m}$$

$$I = \frac{1}{12}(0.08)(0.01^3) + 0.08(0.01)(0.0125^2)$$
$$+ 2\left[\frac{1}{12}(0.01)(0.04^3) + 0.01(0.04)(0.0125^2)\right] = 0.3633(10^{-5})\ \text{m}^4$$

$$\sigma_B = \frac{Mc}{I} = \frac{75(0.0175)}{0.3633(10^{-6})} = 3.61\ \text{MPa}$$ **Ans.**

$$\sigma_C = \frac{My}{I} = \frac{75(0.0175 - 0.01)}{0.3633(10^{-6})} = 1.55\ \text{MPa}$$ **Ans.**

Ans:
$\sigma_B = 3.61$ MPa, $\sigma_C = 1.55$ MPa

6–59. The aluminum machine part is subjected to a moment of $M = 75\ \text{kN}\cdot\text{m}$. Determine the maximum tensile and compressive bending stresses in the part.

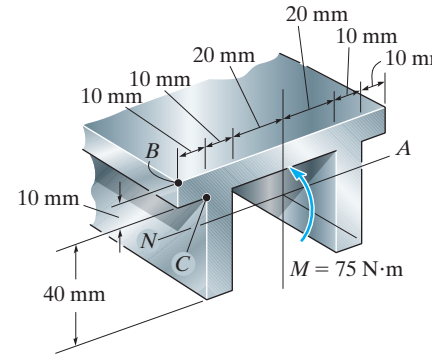

$$\bar{y} = \frac{0.005(0.08)(0.01) + 2[0.03(0.04)(0.01)]}{0.08(0.01) + 2(0.04)(0.01)} = 0.0175\ \text{m}$$

$$I = \frac{1}{12}(0.08)(0.01^3) + 0.08(0.01)(0.0125^2)$$
$$+ 2\left[\frac{1}{12}(0.01)(0.04^3) + 0.01(0.04)(0.0125^2)\right] = 0.3633(10^{-5})\ \text{m}^4$$

$$(\sigma_{\max})_t = \frac{Mc}{I} = \frac{75(0.050 - 0.0175)}{0.3633(10^{-6})} = 6.71\ \text{MPa}$$ **Ans.**

$$(\sigma_{\max})_c = \frac{My}{I} = \frac{75(0.0175)}{0.3633(10^{-6})} = 3.61\ \text{MPa}$$ **Ans.**

Ans:
$(\sigma_{\max})_t = 6.71$ MPa, $(\sigma_{\max})_c = 3.61$ MPa

***6–60.** The beam is subjected to a moment of 15 kip · ft. Determine the resultant force the bending stress produces on the top flange A and bottom flange B. Also compute the maximum bending stress developed in the beam.

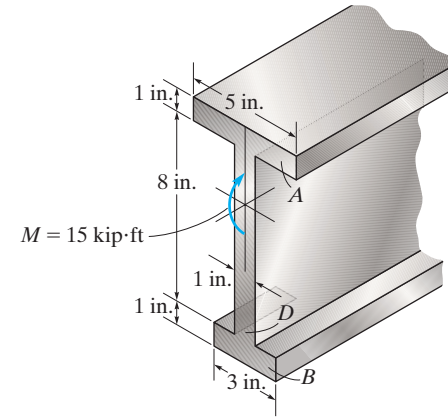

$$\bar{y} = \frac{\Sigma \tilde{y} A}{\Sigma A} = \frac{0.5(1)(5) + 5(8)(1) + 9.5(3)(1)}{1(5) + 8(1) + 3(1)} = 4.4375 \text{ in.}$$

$$I = \frac{1}{12}(5)(1^3) + 5(1)(4.4375 - 0.5)^2 + \frac{1}{12}(1)(8^3) + 8(1)(5 - 4.4375)^2$$
$$+ \frac{1}{12}(3)(1^3) + 3(1)(9.5 - 4.4375)^2$$
$$= 200.27 \text{ in}^4$$

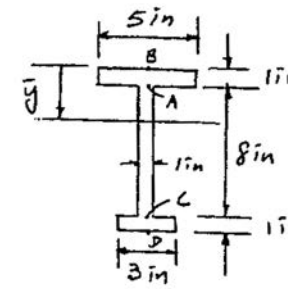

Using flexure formula $\sigma = \dfrac{My}{I}$

$$\sigma_A = \frac{15(12)(4.4375 - 1)}{200.27} = 3.0896 \text{ ksi}$$

$$\sigma_B = \frac{15(12)(4.4375)}{200.27} = 3.9883 \text{ ksi}$$

$$\sigma_C = \frac{15(12)(9 - 4.4375)}{200.27} = 4.1007 \text{ ksi}$$

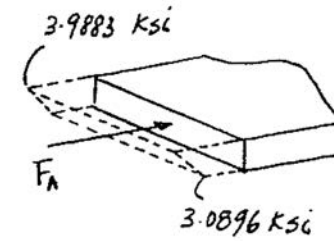

$$\sigma_{\max} = \frac{15(12)(10 - 4.4375)}{200.27} = 4.9995 \text{ ksi} = 5.00 \text{ ksi (Max)}$$ **Ans.**

$$F_A = \frac{1}{2}(3.0896 + 3.9883)(1)(5) = 17.7 \text{ kip}$$ **Ans.**

$$F_B = \frac{1}{2}(4.9995 + 4.1007)(1)(3) = 13.7 \text{ kip}$$ **Ans.**

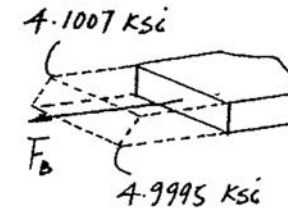

6–61. The beam is subjected to a moment of 15 kip · ft. Determine the percentage of this moment that is resisted by the web D of the beam.

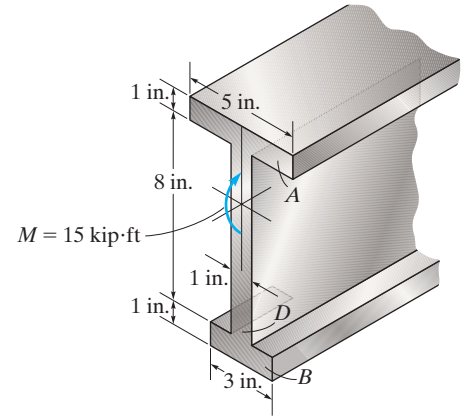

$$\bar{y} = \frac{\Sigma \tilde{y} A}{\Sigma A} = \frac{0.5(1)(5) + 5(8)(1) + 9.5(3)(1)}{1(5) + 8(1) + 3(1)} = 4.4375 \text{ in.}$$

$$I = \frac{1}{12}(5)(1^3) + 5(1)(4.4375 - 0.5)^2 + \frac{1}{12}(1)(8^3) + 8(1)(5 - 4.4375)^2$$
$$+ \frac{1}{12}(3)(1^3) + 3(1)(9.5 - 4.4375)^2$$
$$= 200.27 \text{ in}^4$$

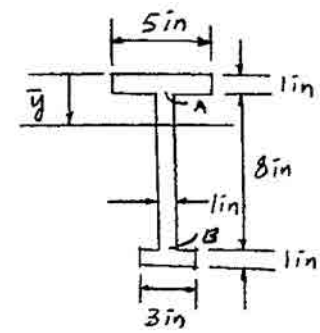

Using flexure formula $\sigma = \dfrac{My}{I}$

$$\sigma_A = \frac{15(12)(4.4375 - 1)}{200.27} = 3.0896 \text{ ksi}$$

$$\sigma_B = \frac{15(12)(9 - 4.4375)}{200.27} = 4.1007 \text{ ksi}$$

$$F_C = \frac{1}{2}(3.0896)(3.4375)(1) = 5.3102 \text{ kip}$$

$$F_T = \frac{1}{2}(4.1007)(4.5625)(1) = 9.3547 \text{ kip}$$

$$M = 5.3102(2.2917) + 9.3547(3.0417)$$
$$= 40.623 \text{ kip} \cdot \text{in.} = 3.3852 \text{ kip} \cdot \text{ft}$$

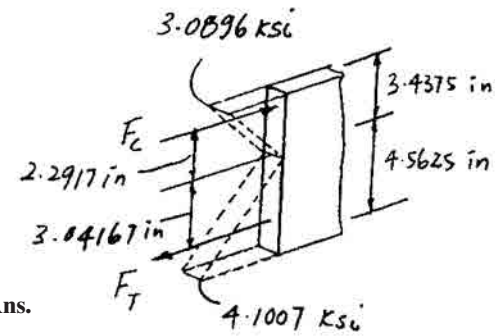

$$\% \text{ of moment carried by web} = \frac{3.3852}{15} \times 100 = 22.6\ \%$$ **Ans.**

Ans:
% of moment carried by web = 22.6 %

6–62. A box beam is constructed from four pieces of wood, glued together as shown. If the moment acting on the cross section is 10 kN · m, determine the stress at points A and B and show the results acting on volume elements located at these points.

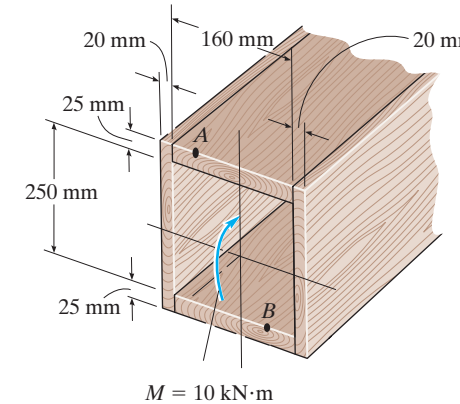

The moment of inertia of the cross-section about the neutral axis is

$$I = \frac{1}{12}(0.2)(0.3^3) - \frac{1}{12}(0.16)(0.25^3) = 0.2417(10^{-3})\ \text{m}^4.$$

For point A, $y_A = C = 0.15$ m.

$$\sigma_A = \frac{My_A}{I} = \frac{10(10^3)\,(0.15)}{0.2417(10^{-3})} = 6.207(10^6)\ \text{Pa} = 6.21\ \text{MPa (C)} \qquad \textbf{Ans.}$$

For point B, $y_B = 0.125$ m.

$$\sigma_B = \frac{My_B}{I} = \frac{10(10^3)(0.125)}{0.2417(10^{-3})} = 5.172(10^6)\ \text{Pa} = 5.17\ \text{MPa (T)} \qquad \textbf{Ans.}$$

The state of stress at point A and B are represented by the volume element shown in Figs. a and b, respectively.

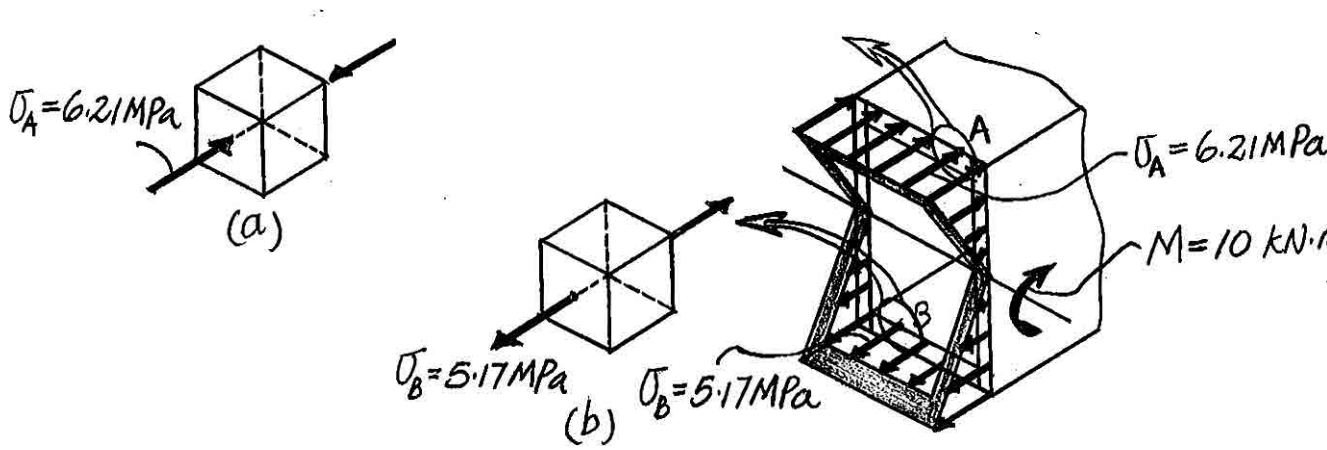

Ans:
$\sigma_A = 6.21$ MPa (C), $\sigma_B = 5.17$ MPa (T)

6–63. The beam is subjected to a moment of $M = 30\ \text{lb}\cdot\text{ft}$. Determine the bending stress acting at point A and B. Also, sketch a three-dimensional view of the stress distribution acting over the entire cross-sectional area.

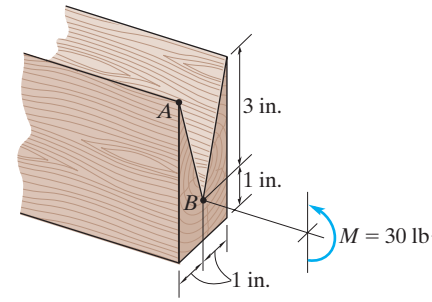

$$\bar{y} = \frac{2(4)(2) - 3(\frac{1}{2})(2)(3)}{4(2) - \frac{1}{2}(2)(3)} = 1.40\ \text{in.}$$

$$I = \frac{1}{12}(2)(4)^3 + (4)(2)(2 - 1.40)^2 - \left(\frac{1}{36}(2)(3)^3 + \frac{1}{2}(2)(3)(3 - 1.40)^2\right) = 4.367\ \text{in}^4$$

$$\sigma_A = \frac{My}{I} = \frac{(30)(12)(4 - 1.40)}{4.367} = 214\ \text{psi (C)} \qquad \textbf{Ans.}$$

$$\sigma_B = \frac{My}{I} = \frac{30(12)(1.40 - 1)}{4.367} = 33.0\ \text{psi (T)} \qquad \textbf{Ans.}$$

$$\sigma_C = \frac{My}{I} = \frac{30(12)(1.40)}{4.367} = 115\ \text{psi (T)}$$

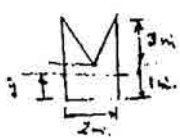

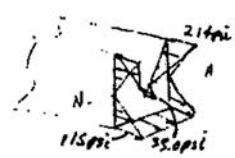

Ans:
$\sigma_A = 214$ psi (C), $\sigma_B = 33.0$ psi (T),
$\sigma_C = 115$ psi (T)

***6–64.** The axle of the freight car is subjected to wheel loading of 20 kip. If it is supported by two journal bearings at C and D, determine the maximum bending stress developed at the center of the axle, where the diameter is 5.5 in.

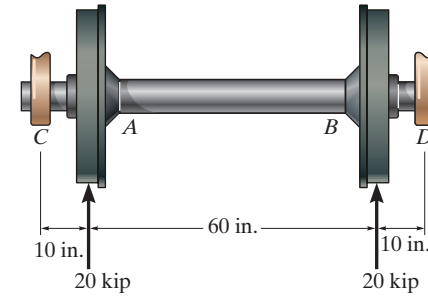

$$\sigma_{\max} = \frac{Mc}{I} = \frac{200(2.75)}{\frac{1}{4}\pi(2.75)^4} = 12.2 \text{ ksi}$$

Ans.

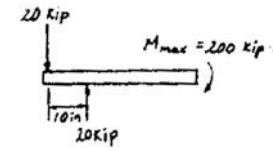

6–65. A shaft is made of a polymer having an elliptical cross-section. If it resists an internal moment of M = 50 N·m, determine the maximum bending stress developed in the material (a) using the flexure formula, where $I_z = \frac{1}{4}\pi(0.08\text{ m})(0.04\text{ m})^3$, (b) using integration. Sketch a three-dimensional view of the stress distribution acting over the cross-sectional area.

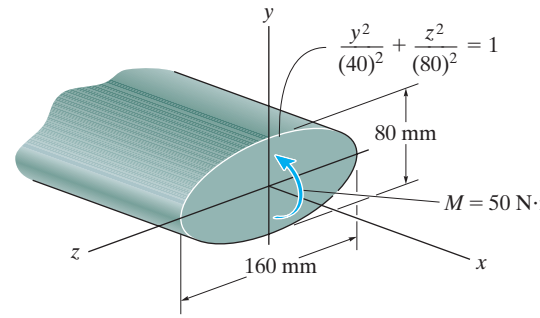

(a)

$$I = \frac{1}{4}\pi\, ab^3 = \frac{1}{4}\pi(0.08)(0.04)^3 = 4.021238(10^{-6})\text{ m}^4$$

$$\sigma_{\max} = \frac{Mc}{I} = \frac{50(0.04)}{4.021238(10^{-6})} = 497\text{ kPa}$$ **Ans.**

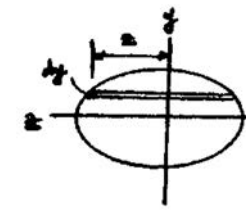

(b)

$$M = \frac{\sigma_{\max}}{c}\int_A y^2 dA$$

$$= \frac{\sigma_{\max}}{c}\int y^2 2z dy$$

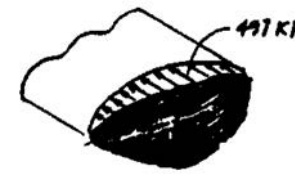

$$z = \sqrt{0.0064 - 4y^2} = 2\sqrt{(0.04)^2 - y^2}$$

$$2\int_{-0.04}^{0.04} y^2 z dy = 4\int_{-0.04}^{0.04} y^2\sqrt{(0.04)^2 - y^2}\, dy$$

$$= 4\left[\frac{(0.04)^4}{8}\sin^{-1}\left(\frac{y}{0.04}\right) - \frac{1}{8}y\sqrt{(0.04)^2 - y^2}(0.04^2 - 2y^2)\right]\Bigg|_{-0.04}^{0.04}$$

$$= \frac{(0.04)^4}{2}\sin^{-1}\left(\frac{y}{0.04}\right)\Bigg|_{-0.04}^{0.04}$$

$$= 4.021238(10^{-6})\text{ m}^4$$

$$\sigma_{\max} = \frac{50(0.04)}{4.021238(10^{-6})} = 497\text{ kPa}$$ **Ans.**

Ans:
(a) $\sigma_{\max} = 497$ kPa,
(b) $\sigma_{\max} = 497$ kPa

6–66. Solve Prob. 6–65 if the moment $M = 50\ \text{kN}\cdot\text{m}$ is applied about the y axis instead of the x axis. Here $I_y = \frac{1}{4}\pi(0.04\ \text{m})(0.08\ \text{m})^3$.

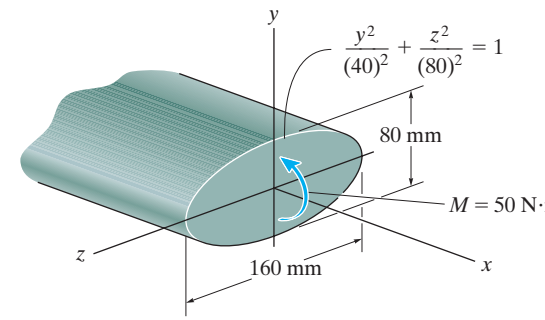

(a)

$$I = \frac{1}{4}\pi\, ab^3 = \frac{1}{4}\pi(0.04)(0.08)^3 = 16.085(10^{-6})\ \text{m}^4$$

$$\sigma_{\max} = \frac{Mc}{I} = \frac{50(0.08)}{16.085(10^{-6})} = 249\ \text{kPa}$$ **Ans.**

(b)

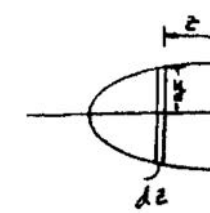

$$M = \int_A z(\sigma\, dA) = \int_A z\left(\frac{\sigma_{\max}}{0.08}\right)(z)(2y)dz$$

$$50 = 2\left(\frac{\sigma_{\max}}{0.04}\right)\int_0^{0.08} z^2\left(1 - \frac{z^2}{(0.08)^2}\right)^{1/2}(0.04)dz$$

$$50 = 201.06(10^{-6})\sigma_{\max}$$

$$\sigma_{\max} = 249\ \text{kPa}$$ **Ans.**

Ans:
(a) $\sigma_{\max} = 249$ kPa,
(b) $\sigma_{\max} = 249$ kPa

6–67. The shaft is supported by smooth journal bearings at A and B that only exert vertical reactions on the shaft. If $d = 90$ mm, determine the absolute maximum bending stress in the beam, and sketch the stress distribution acting over the cross section.

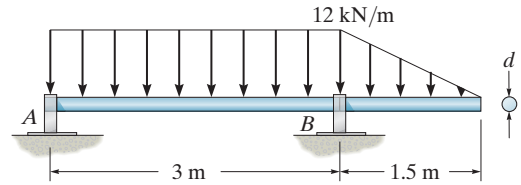

Absolute Maximum Bending Stress: The maximum moment is $M_{max} = 11.34\ \text{kN}\cdot\text{m}$ as indicated on the moment diagram. Applying the flexure formula

$$\sigma_{max} = \frac{M_{max}\,c}{I}$$

$$= \frac{11.34(10^3)(0.045)}{\frac{\pi}{4}(0.045^4)}$$

$$= 158\ \text{MPa} \qquad \textbf{Ans.}$$

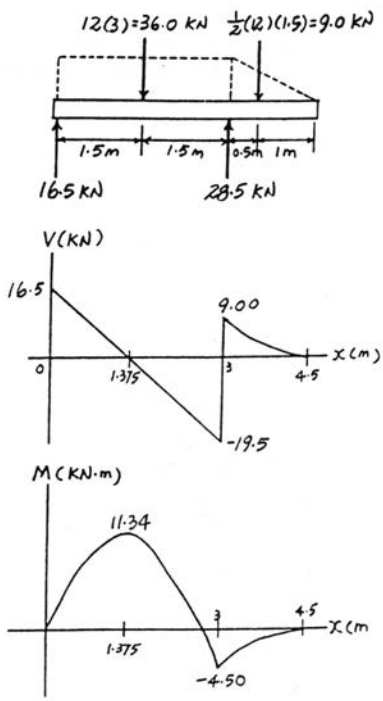

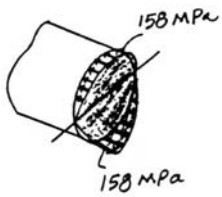

Ans:
$\sigma_{max} = 158$ MPa

***6–68.** The shaft is supported by smooth journal bearings at A and B that only exert vertical reactions on the shaft. Determine its smallest diameter d if the allowable bending stress is $\sigma_{\text{allow}} = 180$ MPa.

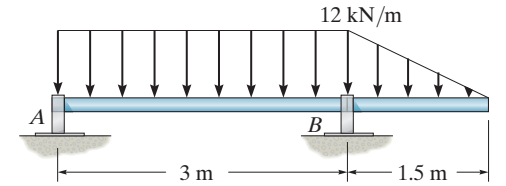

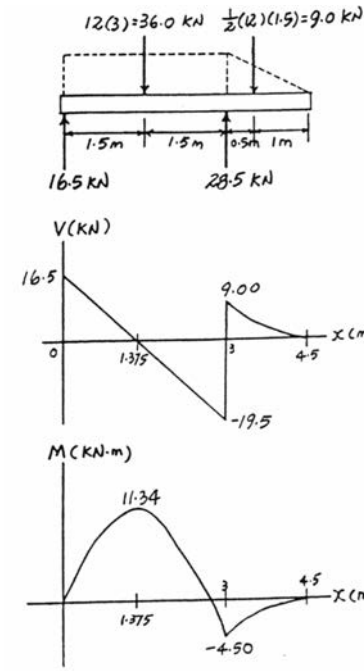

Allowable Bending Stress: The maximum moment is $M_{\max} = 11.34\ \text{kN}\cdot\text{m}$ as indicated on the moment diagram. Applying the flexure formula

$$\sigma_{\max} = \sigma_{\text{allow}} = \frac{M_{\max}\, c}{I}$$

$$180\left(10^6\right) = \frac{11.34(10^3)\left(\frac{d}{2}\right)}{\frac{\pi}{4}\left(\frac{d}{2}\right)^4}$$

$$d = 0.08626\ \text{m} = 86.3\ \text{mm} \qquad \textbf{Ans.}$$

6–69. Two designs for a beam are to be considered. Determine which one will support a moment of $M = 150\ \text{kN}\cdot\text{m}$ with the least amount of bending stress. What is that stress?

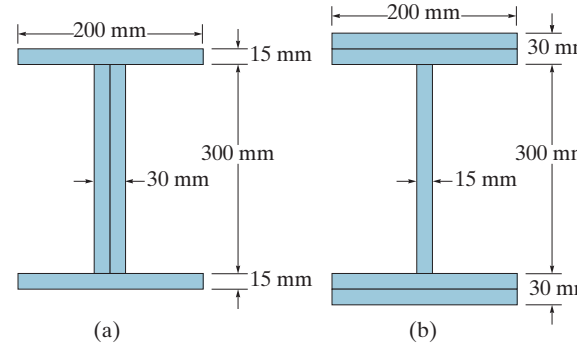

Section Property:

For section (a)

$$I = \frac{1}{12}(0.2)\left(0.33^3\right) - \frac{1}{12}(0.17)(0.3)^3 = 0.21645(10^{-3})\ \text{m}^4$$

For section (b)

$$I = \frac{1}{12}(0.2)\left(0.36^3\right) - \frac{1}{12}(0.185)\left(0.3^3\right) = 0.36135(10^{-3})\ \text{m}^4$$

Maximum Bending Stress: Applying the flexure formula $\sigma_{\max} = \dfrac{Mc}{I}$

For section (a)

$$\sigma_{\max} = \frac{150(10^3)(0.165)}{0.21645(10^{-3})} = 114.3\ \text{MPa}$$

For section (b)

$$\sigma_{\min} = \frac{150(10^3)(0.18)}{0.36135(10^{-3})} = 74.72\ \text{MPa} = 74.7\ \text{MPa}$$ **Ans.**

Ans:
$\sigma_{\min} = 74.7\ \text{MPa}$

6–70. The simply supported truss is subjected to the central distributed load. Neglect the effect of the diagonal lacing and determine the absolute maximum bending stress in the truss. The top member is a pipe having an outer diameter of 1 in. and thickness of $\frac{3}{16}$ in., and the bottom member is a solid rod having a diameter of $\frac{1}{2}$ in.

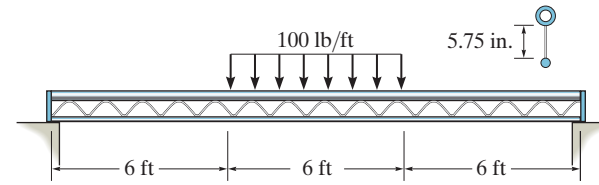

$$\bar{y} = \frac{\Sigma \tilde{y} A}{\Sigma A} = \frac{0 + (6.50)(0.4786)}{0.4786 + 0.19635} = 4.6091 \text{ in.}$$

$$I = \left[\frac{1}{4}\pi(0.5)^4 - \frac{1}{4}\pi(0.3125)^4\right] + 0.4786(6.50 - 4.6091)^2 + \frac{1}{4}\pi(0.25)^4$$

$$+ 0.19635(4.6091)^2 = 5.9271 \text{ in}^4$$

$$M_{\max} = 300(9 - 1.5)(12) = 27\,000 \text{ lb} \cdot \text{in.}$$

$$\sigma_{\max} = \frac{Mc}{I} = \frac{27\,000(4.6091 + 0.25)}{5.9271}$$

$$= 22.1 \text{ ksi}$$ **Ans.**

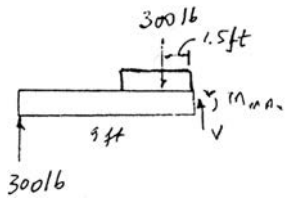

Ans:
$\sigma_{\max} = 22.1$ ksi

6–71. The boat has a weight of 2300 lb and a center of gravity at G. If it rests on the trailer at the smooth contact A and can be considered pinned at B, determine the absolute maximum bending stress developed in the main strut of the trailer. Consider the strut to be a box-beam having the dimensions shown and pinned at C.

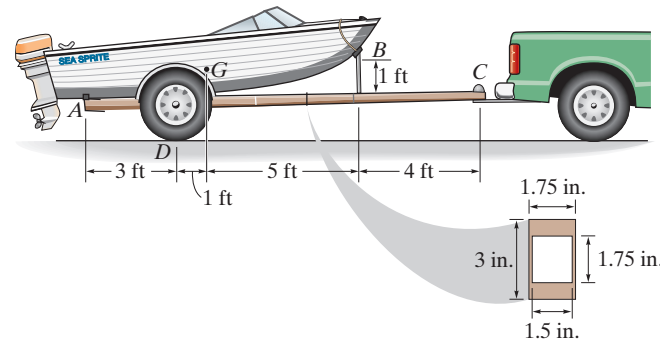

Boat:

$\xrightarrow{+} \Sigma F_x = 0;$ $\quad B_x = 0$

$\circlearrowleft + \Sigma M_B = 0;$ $\quad -N_A(9) + 2300(5) = 0$

$N_A = 1277.78 \text{ lb}$

$+\uparrow \Sigma F_y = 0;$ $\quad 1277.78 - 2300 + B_y = 0$

$B_y = 1022.22 \text{ lb}$

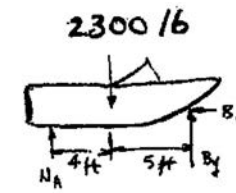

Assembly:

$\circlearrowleft + \Sigma M_C = 0;$ $\quad -N_D(10) + 2300(9) = 0$

$N_D = 2070 \text{ lb}$

$+\uparrow \Sigma F_y = 0;$ $\quad C_y + 2070 - 2300 = 0$

$C_y = 230 \text{ lb}$

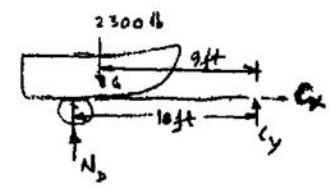

$$I = \frac{1}{12}(1.75)(3)^3 - \frac{1}{12}(1.5)(1.75)^3 = 3.2676 \text{ in}^4$$

$$\sigma_{\max} = \frac{Mc}{I} = \frac{3833.3(12)(1.5)}{3.2676} = 21.1 \text{ ksi}$$ **Ans.**

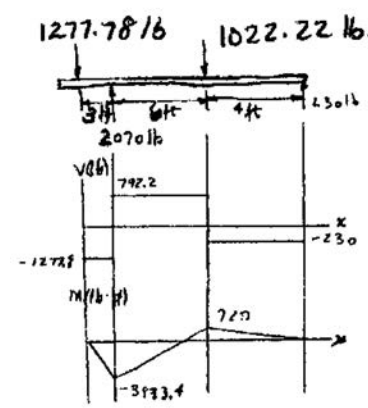

Ans:

$\sigma_{\max} = 21.1 \text{ ksi}$

***6–72.** Determine the absolute maximum bending stress in the 1.5-in.-diameter shaft which is subjected to the concentrated forces. The sleeve bearings at A and B support only vertical forces.

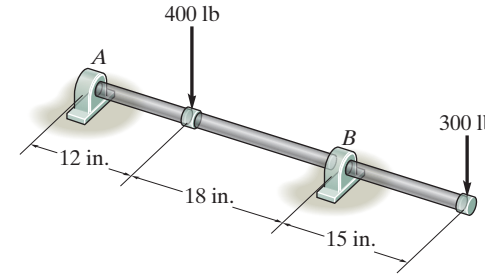

$M_{\max} = 4500 \text{ lb} \cdot \text{in.}$

$$\sigma = \frac{Mc}{I} = \frac{4500(0.75)}{\frac{1}{4}\pi(0.75)^4} = 13.6 \text{ ksi}$$ **Ans.**

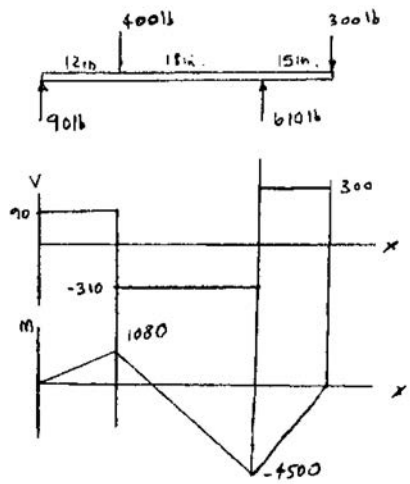

6–73. Determine the smallest allowable diameter of the shaft which is subjected to the concentrated forces. The sleeve bearings at A and B support only vertical forces, and the allowable bending stress is $\sigma_{\text{allow}} = 22$ ksi.

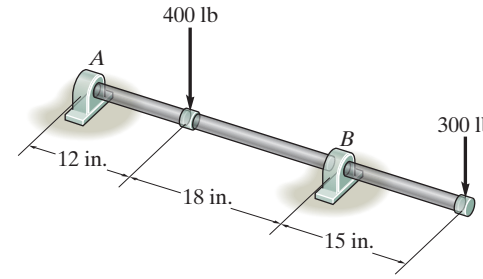

$M_{\max} = 4500 \text{ lb} \cdot \text{in.}$

$$\sigma = \frac{Mc}{I}; \qquad 22(10^3) = \frac{4500c}{\frac{1}{4}\pi c^4}$$

$c = 0.639$ in.

$d = 1.28$ in. **Ans.**

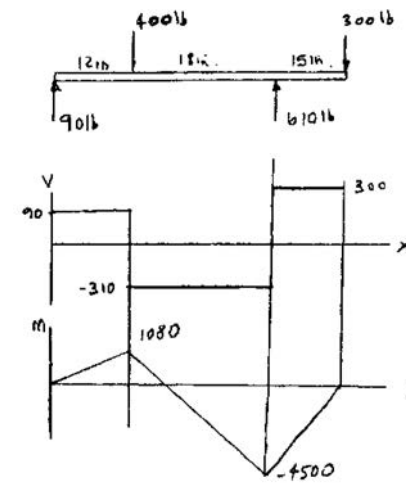

Ans:
$d = 1.28$ in.

6–74. The pin is used to connect the three links together. Due to wear, the load is distributed over the top and bottom of the pin as shown on the free-body diagram. If the diameter of the pin is 0.40 in., determine the maximum bending stress on the cross-sectional area at the center section *a–a*. For the solution it is first necessary to determine the load intensities w_1 and w_2.

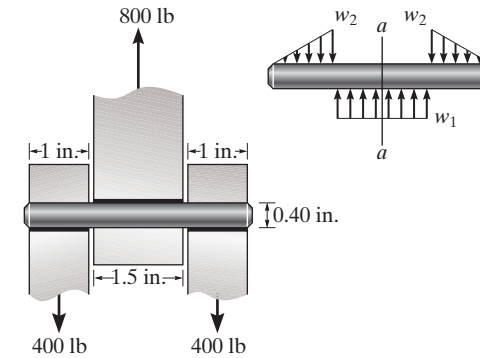

$$\frac{1}{2}w_2(1) = 400; \qquad w_2 = 800 \text{ lb/in.}$$

$$w_1(1.5) = 800; \qquad w_1 = 533 \text{ lb/in.}$$

$$M = 400(0.70833) = 283.33 \text{ lb}\cdot\text{in}$$

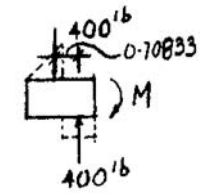

$$I = \frac{1}{4}\pi(0.2^4) = 0.0012566 \text{ in}^4$$

$$\sigma_{max} = \frac{Mc}{I} = \frac{283.33\,(0.2)}{0.0012566}$$
$$= 45.1 \text{ ksi}$$ **Ans.**

Ans:
$\sigma_{max} = 45.1$ ksi

6–75. The shaft is supported by a smooth thrust bearing at A and smooth journal bearing at D. If the shaft has the cross section shown, determine the absolute maximum bending stress in the shaft.

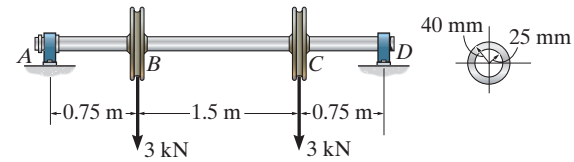

Shear and Moment Diagrams: As shown in Fig. *a*.

Maximum Moment: Due to symmetry, the maximum moment occurs in region BC of the shaft. Referring to the free-body diagram of the segment shown in Fig. *b*.

Section Properties: The moment of inertia of the cross section about the neutral axis is

$$I = \frac{\pi}{4}\left(0.04^4 - 0.025^4\right) = 1.7038\left(10^{-6}\right)\text{m}^4$$

Absolute Maximum Bending Stress:

$$\sigma_{\max} = \frac{M_{\max}c}{I} = \frac{2.25\left(10^3\right)(0.04)}{1.7038\left(10^{-6}\right)} = 52.8\text{ MPa} \qquad \textbf{Ans.}$$

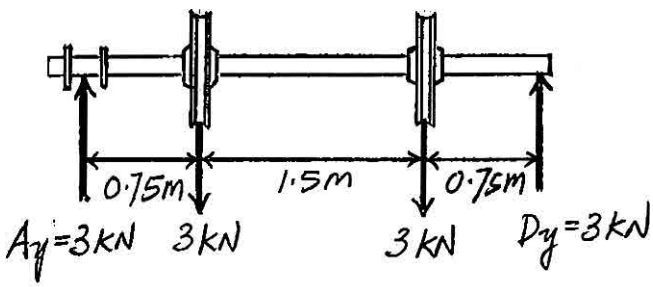

(a)

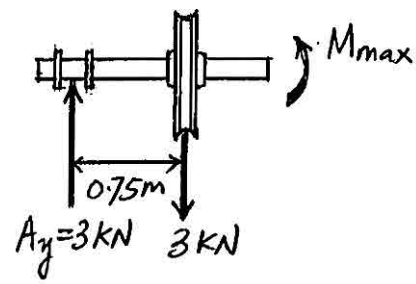

(b)

Ans:
$\sigma_{\max} = 52.8$ MPa

***6–76.** Determine the moment **M** that must be applied to the beam in order to create a maximum stress of 80 MPa. Also sketch the stress distribution acting over the cross section.

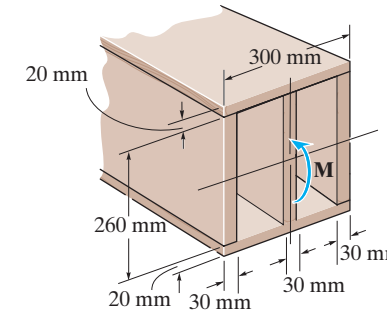

The moment of inertia of the cross section about the neutral axis is

$$I = \frac{1}{12}(0.3)(0.3^3) - \frac{1}{12}(0.21)(0.26^3) = 0.36742(10^{-3})\ \text{m}^4$$

Thus,

$$\sigma_{\max} = \frac{Mc}{I}; \qquad 80(10^6) = \frac{M(0.15)}{0.36742(10^{-3})}$$

$$M = 195.96\ (10^3)\ \text{N}\cdot\text{m} = 196\ \text{kN}\cdot\text{m} \qquad \textbf{Ans.}$$

The bending stress distribution over the cross section is shown in Fig. *a*.

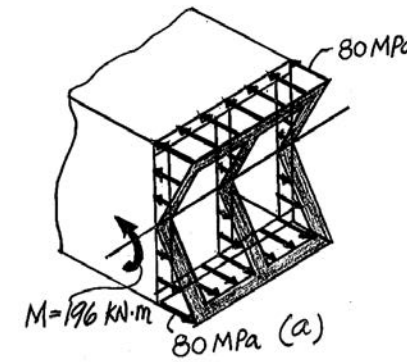

6–77. If the beam is subjected to an internal moment of $M = 2\ \text{kip}\cdot\text{ft}$, determine the maximum tensile and compressive stress in the beam. Also, sketch the bending stress distribution on the cross section.

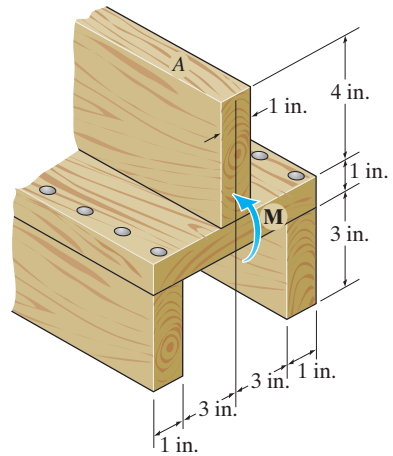

Section Properties: The neutral axis passes through centroid C of the cross section as shown in Fig. a. The location of C is

$$\bar{y} = \frac{\Sigma \tilde{y} A}{\Sigma A} = \frac{2[1.5(3)(1)] + 3.5(8)(1) + 6(4)(1)}{2(3)(1) + 8(1) + 4(1)} = 3.3889\ \text{in.}$$

Thus, the moment of inertia of the cross section about the neutral axis is

$$\begin{aligned} I &= \Sigma \bar{I} + Ad^2 \\ &= 2\left[\frac{1}{12}(1)(3^3) + 1(3)(3.3889 - 1.5)^2\right] + \frac{1}{12}(8)(1^3) + 8(1)(3.5 + 3.3889)^3 \\ &\quad + \frac{1}{12}(1)(4^3) + (1)(4)(6 - 3.3889)^2 \\ &= 59.278\ \text{in}^4 \end{aligned}$$

Maximum Bending Stress: The maximum compressive and tensile stress occurs at the top and bottom-most fibers of the cross section.

$$(\sigma_{\max})_c = \frac{Mc}{I} = \frac{2(12)(8 - 3.3889)}{59.278} = 1.87\ \text{ksi} \qquad \textbf{Ans.}$$

$$(\sigma_{\max})_t = \frac{My}{I} = \frac{2(12)(3.3889)}{59.278} = 1.37\ \text{ksi} \qquad \textbf{Ans.}$$

The bending stresses at $y = 0.6111$ in. and $y = -0.3889$ in. are

$$\sigma|_{y=0.6111\ \text{in.}} = \frac{My}{I} = \frac{2(12)(0.6111)}{59.278} = 0.247\ \text{ksi (C)}$$

$$\sigma|_{y=-0.3889\ \text{in.}} = \frac{My}{I} = \frac{2(12)(0.3889)}{59.278} = 0.157\ \text{ksi (T)}$$

The bending stress distribution across the cross section is shown in Fig. b.

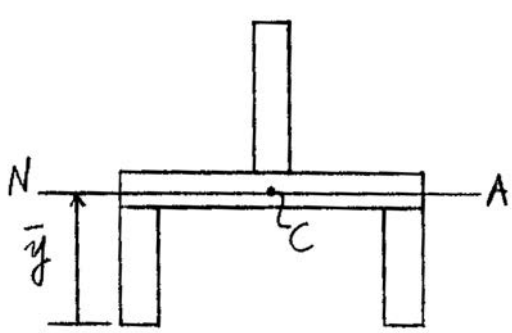

(a)

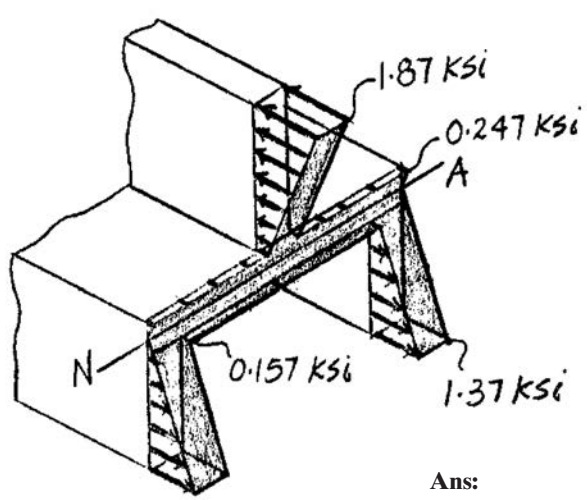

(b)

Ans:
$(\sigma_{\max})_c = 1.87$ ksi,
$(\sigma_{\max})_t = 1.37$ ksi

6–78. If the allowable tensile and compressive stress for the beam are $(\sigma_{\text{allow}})_t = 2$ ksi and $(\sigma_{\text{allow}})_c = 3$ ksi, respectively, determine the maximum allowable internal moment **M** that can be applied on the cross section.

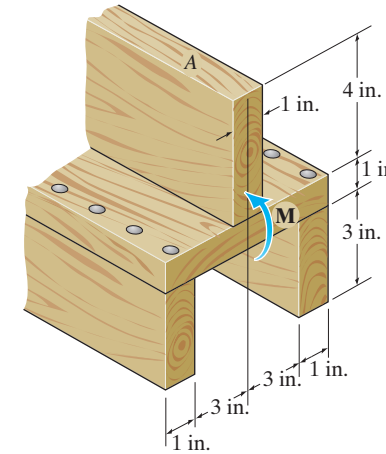

Section Properties: The neutral axis passes through the centroid C of the cross section as shown in Fig. a. The location of C is given by

$$\bar{y} = \frac{\Sigma \tilde{y} A}{\Sigma A} = \frac{2[1.5(3)(1) + 3.5(8)(1) + 6(4)(1)]}{2(3)(1) + 8(1) + 4(1)} = 3.3889 \text{ in.}$$

Thus, the moment of inertia of the cross section about the neutral axis is

$$\begin{aligned} I &= \Sigma \bar{I} + Ad^2 \\ &= 2\left[\frac{1}{12}(1)(3^3) + 1(3)(3.3889 - 1.5)^2\right] + \frac{1}{12}(8)(1^3) + 8(1)(3.5 - 3.3889)^3 \\ &\quad + \frac{1}{12}(1)(4^3) + (1)(4)(6 - 3.3889)^2 \\ &= 59.278 \text{ in}^4 \end{aligned}$$

Allowable Bending Stress: The maximum compressive and tensile stress occurs at the top and bottom-most fibers of the cross section.

$$(\sigma_{\text{allow}})_c = \frac{Mc}{I}; \qquad 3 = \frac{M(8 - 3.3889)}{59.278}$$

$$M = 38.57 \text{ kip} \cdot \text{in}\left(\frac{1 \text{ ft}}{12 \text{ in.}}\right) = 3.21 \text{ kip} \cdot \text{ft}$$

For the bottom-most fiber,

$$(\sigma_{\text{allow}})_t = \frac{My}{I}; \qquad 2 = \frac{M(3.3889)}{59.278}$$

$$M = 34.98 \text{ kip} \cdot \text{in}\left(\frac{1 \text{ ft}}{12 \text{ in.}}\right) = 2.92 \text{ kip} \cdot \text{ft (controls)} \qquad \textbf{Ans.}$$

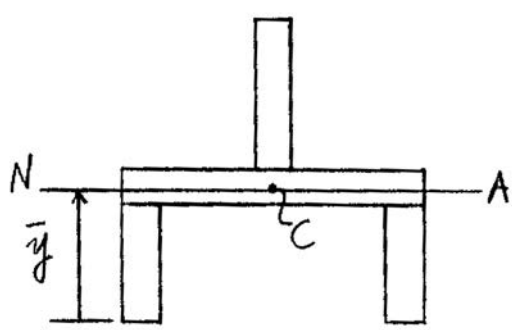

(a)

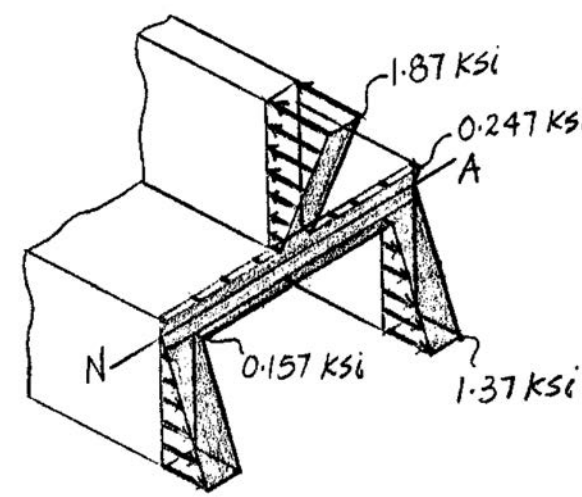

(b)

Ans:
$M = 2.92$ kip · ft

6–79. If the beam is subjected to an internal moment of $M = 2$ kip · ft, determine the resultant force of the bending stress distribution acting on the top vertical board A.

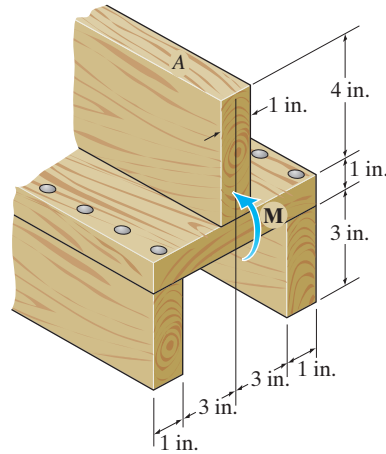

Section Properties: The neutral axis passes through the centroid C of the cross section as shown in Fig. a. The location of C is given by

$$\bar{y} = \frac{\Sigma \tilde{y} A}{\Sigma A} = \frac{2[1.5(3)(1) + 3.5(8)(1) + 6(4)(1)]}{2(3)(1) + 8(1) + 4(1)} = 3.3889 \text{ in.}$$

Thus, the moment of inertia of the cross section about the neutral axis is

$$I = \Sigma \bar{I} + Ad^2$$

$$= 2\left[\frac{1}{12}(1)(3^3) + 1(3)(3.3889 - 1.5)^2\right] + \frac{1}{12}(8)(1^3) + 8(1)(3.5 - 3.3889)^3$$

$$+ \frac{1}{12}(1)(4^3) + (1)(4)(6 - 3.3889)^2$$

$$= 59.278 \text{ in}^4$$

Bending Stress: The distance from the neutral axis to the top and bottom of board A is $y_t = 8 - 3.3889 = 4.6111$ in. and $y_b = 4 - 3.3889 = 0.6111$ in. We have

$$\sigma_t = \frac{My_t}{I} = \frac{2(12)(4.6111)}{59.278} = 1.8669 \text{ ksi}$$

$$\sigma_b = \frac{My_b}{I} = \frac{2(12)(0.6111)}{59.278} = 0.2474 \text{ ksi}$$

Resultant Force: The resultant force acting on board A is equal to the volume of the trapezoidal stress block shown in Fig. b. Thus,

$$F_R = \frac{1}{2}(1.8669 + 0.2474)(1)(4) = 4.23 \text{ kip}$$ **Ans.**

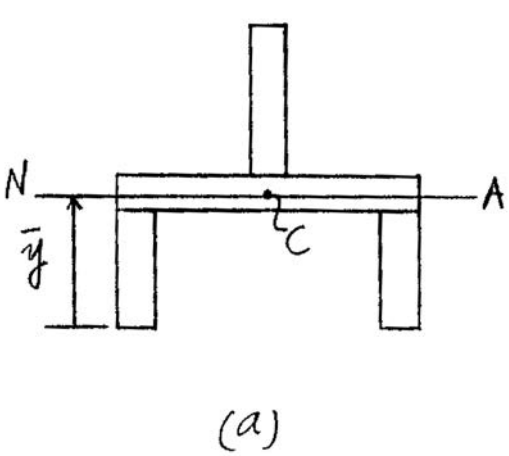

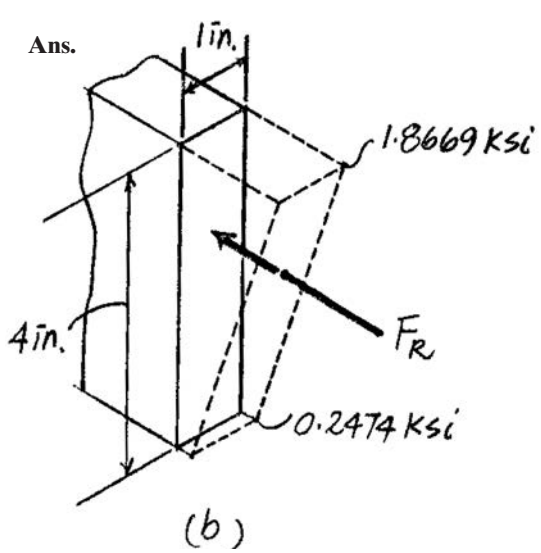

Ans:
$F_R = 4.23$ kip

***6–80.** If the beam is subjected to an internal moment of $M = 100\ \text{kN}\cdot\text{m}$, determine the bending stress developed at points A, B, and C. Sketch the bending stress distribution on the cross section.

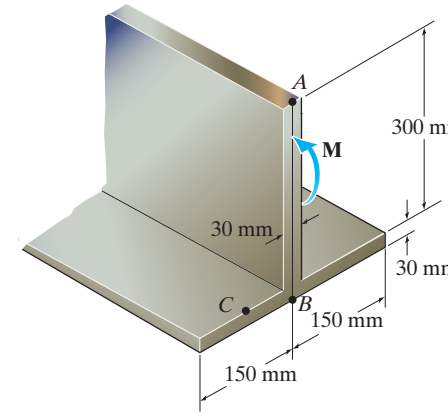

Section Properties: The neutral axis passes through centroid C of the cross section as shown in Fig. a. The location of C is

$$\bar{y} = \frac{\Sigma \tilde{y}A}{\Sigma A} = \frac{0.015(0.03)(0.3) + 0.18(0.3)(0.03)}{0.03(0.3) + 0.3(0.03)} = 0.0975\ \text{m}$$

Thus, the moment of inertia of the cross section about the neutral axis is

$$I = \frac{1}{12}(0.3)(0.03^3) + 0.3(0.03)(0.0975 - 0.015)^2 + \frac{1}{12}(0.03)(0.3^3) + 0.03(0.3)(0.18 - 0.0975)^2$$

$$= 0.1907(10^{-3})\ \text{m}^4$$

Bending Stress: The distance from the neutral axis to points A, B, and C is $y_A = 0.33 - 0.0975 = 0.2325$ m, $y_B = 0.0975$ m, and $y_C = 0.0975 - 0.03 = 0.0675$ m.

$$\sigma_A = \frac{My_A}{I} = \frac{100(10^3)(0.2325)}{0.1907(10^{-3})} = 122\ \text{MPa (C)} \qquad \textbf{Ans.}$$

$$\sigma_B = \frac{My_B}{I} = \frac{100(10^3)(0.0975)}{0.1907(10^{-3})} = 51.1\ \text{MPa (T)} \qquad \textbf{Ans.}$$

$$\sigma_C = \frac{My_C}{I} = \frac{100(10^3)(0.0675)}{0.1907(10^{-3})} = 35.4\ \text{MPa (T)} \qquad \textbf{Ans.}$$

Using these results, the bending stress distribution across the cross section is shown in Fig. b.

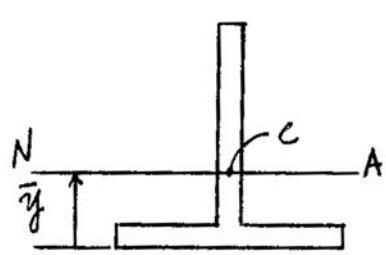

(a)

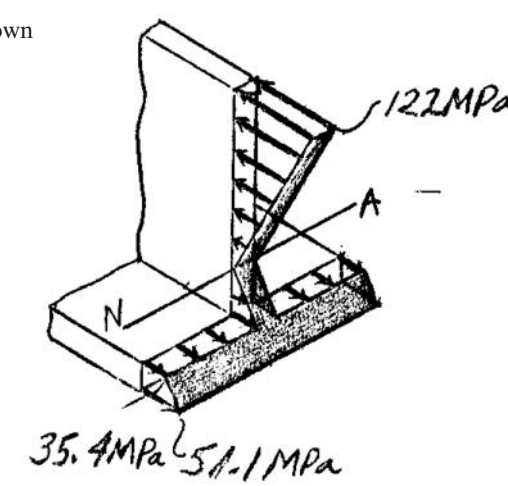

(b)

6–81. If the beam is made of material having an allowable tensile and compressive stress of $(\sigma_{\text{allow}})_t = 125$ MPa and $(\sigma_{\text{allow}})_c = 150$ MPa, respectively, determine the maximum allowable internal moment **M** that can be applied to the beam.

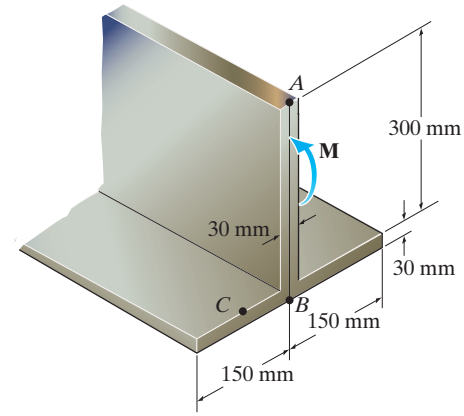

Section Properties: The neutral axis passes through centroid C of the cross section as shown in Fig. a. The location of C is

$$\bar{y} = \frac{\Sigma \tilde{y} A}{\Sigma A} = \frac{0.015(0.03)(0.3) + 0.18(0.3)(0.03)}{0.03(0.3) + 0.3(0.03)} = 0.0975 \text{ m}$$

Thus, the moment of inertia of the cross section about the neutral axis is

$$I = \frac{1}{12}(0.3)(0.03^3) + 0.3(0.03)(0.0975 - 0.015)^2 + \frac{1}{12}(0.03)(0.3^3)$$

$$+ 0.03(0.3)(0.18 - 0.0975)^2$$

$$= 0.1907(10^{-3})\,\text{m}^4$$

Allowable Bending Stress: The maximum compressive and tensile stress occurs at the top and bottom-most fibers of the cross section. For the top-most fiber,

$$(\sigma_{\text{allow}})_c = \frac{Mc}{I} \qquad 150(10^6) = \frac{M(0.33 - 0.0975)}{0.1907(10^{-3})}$$

$$M = 123024.19 \text{ N}\cdot\text{m} = 123 \text{ kN}\cdot\text{m (controls)} \qquad \textbf{Ans.}$$

For the bottom-most fiber,

$$(\sigma_{\text{allow}})_t = \frac{My}{I} \qquad 125(10^6) = \frac{M(0.0975)}{0.1907(10^{-3})}$$

$$M = 244\,471.15 \text{ N}\cdot\text{m} = 244 \text{ kN}\cdot\text{m}$$

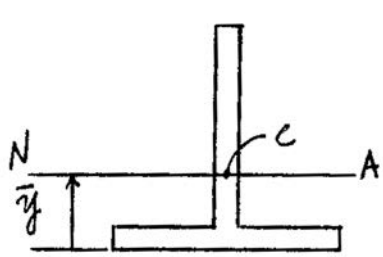

(a)

Ans:
$M = 123 \text{ kN}\cdot\text{m}$

6–82. The shaft is supported by a smooth thrust bearing at A and smooth journal bearing at C. If $d = 3$ in., determine the absolute maximum bending stress in the shaft.

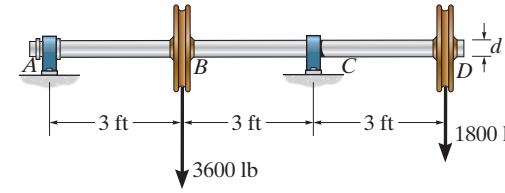

Support Reactions: Shown on the free-body diagram of the shaft, Fig. *a*,

Maximum Moment: The shear and moment diagrams are shown in Figs. *b* and *c*. As indicated on the moment diagram, the maximum moment is $|M_{max}| = 5400 \text{ lb} \cdot \text{ft}$.

Section Properties: The moment of inertia of the cross section about the neutral axis is

$$I = \frac{1}{4}\pi(1.5^4) = 3.9761 \text{ in}^4$$

Absolute Maximum Bending Moment: Here, $c = \frac{3}{2} = 1.5$ in.

$$\sigma_{max} = \frac{M_{max}c}{I} = \frac{5400(12)(1.5)}{3.9761} = 24.4 \text{ ksi}$$

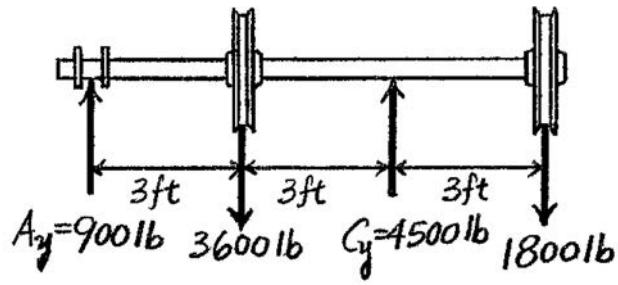

(a)

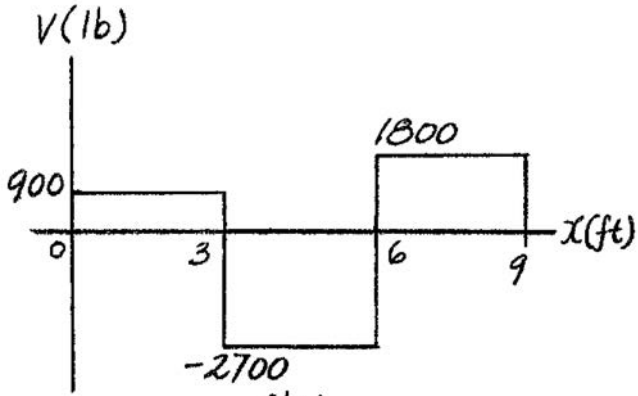

(b)

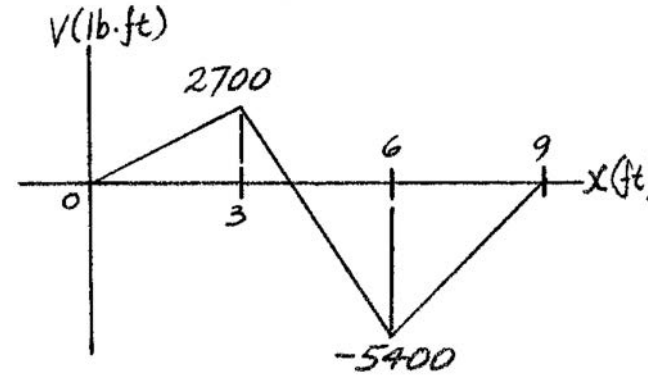

(c)

Ans:
$\sigma_{max} = 24.4$ ksi

6–83. The shaft is supported by a smooth thrust bearing at A and smooth journal bearing at C. If the material has an allowable bending stress of $\sigma_{\text{allow}} = 24$ ksi, determine the required minimum diameter d of the shaft to the nearest 1/16 in.

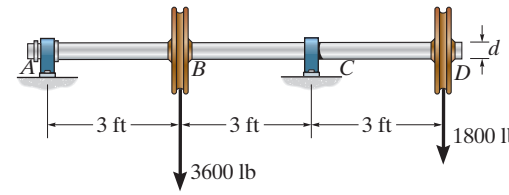

Support Reactions: Shown on the free-body diagram of the shaft, Fig. *a*.

Maximum Moment: As indicated on the moment diagram, Figs. *b* and *c*, the maximum moment is $|M_{\max}| = 5400 \text{ lb} \cdot \text{ft}$.

Section Properties: The moment of inertia of the cross section about the neutral axis is

$$I = \frac{1}{4}\pi\left(\frac{d}{2}\right)^4 = \frac{\pi}{64}d^4$$

Absolute Maximum Bending Moment:

$$\sigma_{\text{allow}} = \frac{Mc}{I}; \qquad 24(10^3) = \frac{5400(12)\left(\frac{d}{2}\right)}{\frac{\pi}{64}d^4}$$

$$d = 3.02 \text{ in.}$$

Use $\quad d = 3\frac{1}{16}$ in. **Ans.**

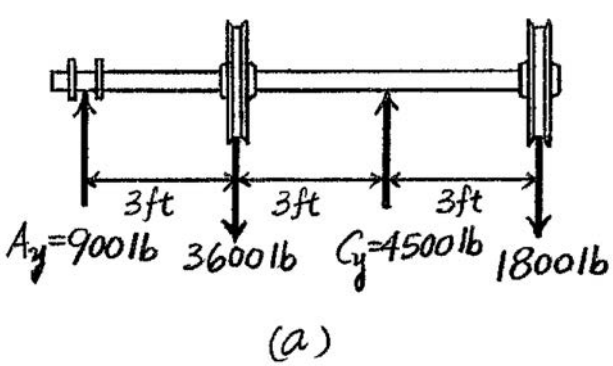

(a)

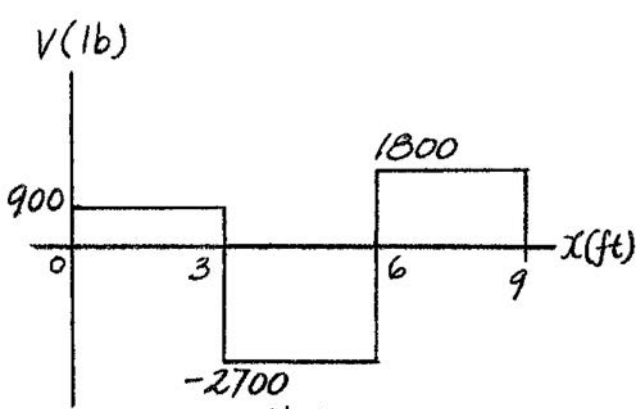

(b)

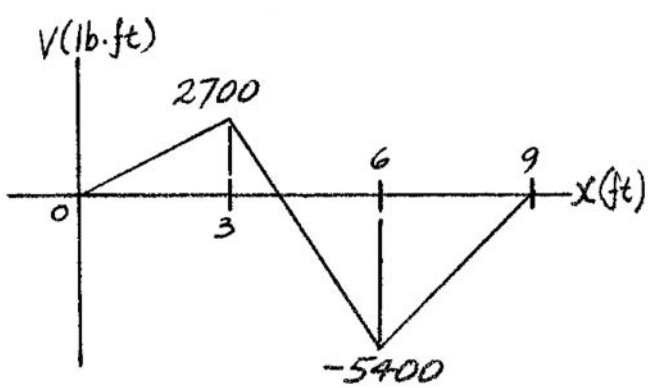

(c)

Ans:
Use $d = 3\frac{1}{16}$ in.

***6–84.** If the intensity of the load $w = 15$ kN/m, determine the absolute maximum tensile and compressive stress in the beam.

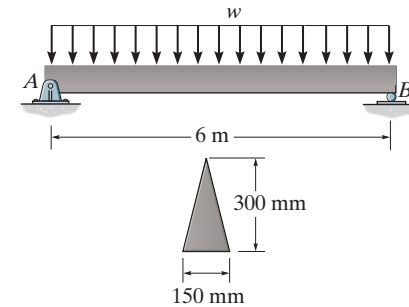

Support Reactions: Shown on the free-body diagram of the beam, Fig. *a*.

Maximum Moment: The maximum moment occurs when $V = 0$. Referring to the free-body diagram of the beam segment shown in Fig. *b*,

$$+\uparrow \sum F_y = 0; \qquad 45 - 15x = 0 \qquad\qquad x = 3 \text{ m}$$

$$\circlearrowleft + \sum M = 0; \qquad M_{\max} + 15(3)\left(\frac{3}{2}\right) - 45(3) = 0 \qquad\qquad M_{\max} = 67.5 \text{ kN}\cdot\text{m}$$

Section Properties: The moment of inertia of the cross section about the neutral axis is

$$I = \frac{1}{36}(0.15)(0.3^3) = 0.1125(10^{-3}) \text{ m}^4$$

Absolute Maximum Bending Stress: The maximum compressive and tensile stresses occur at the top and bottom-most fibers of the cross section.

$$(\sigma_{\max})_c = \frac{Mc}{I} = \frac{67.5(10^3)(0.2)}{0.1125(10^{-3})} = 120 \text{ MPa (C)} \qquad \textbf{Ans.}$$

$$(\sigma_{\max})_t = \frac{My}{I} = \frac{67.5(10^3)(0.1)}{0.1125(10^{-3})} = 60 \text{ MPa (T)} \qquad \textbf{Ans.}$$

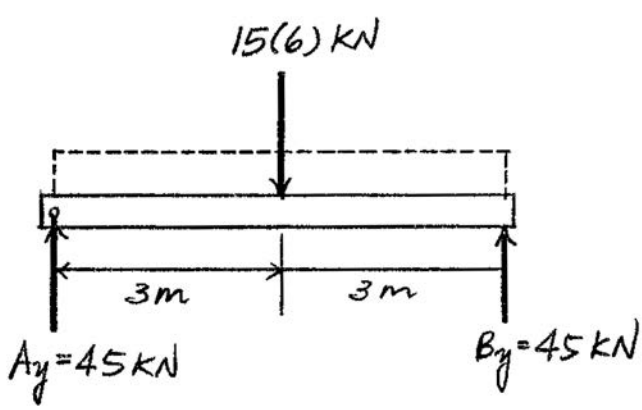

(a)

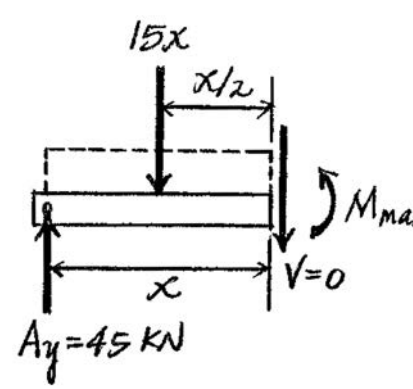

(b)

6–85. If the material of the beam has an allowable bending stress of $\sigma_{\text{allow}} = 150\text{ MPa}$, determine the maximum allowable intensity w of the uniform distributed load.

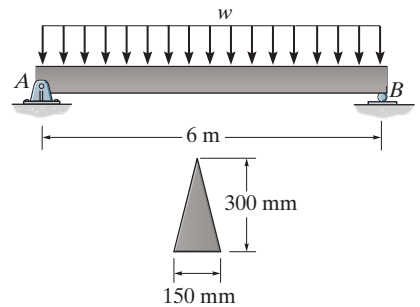

Support Reactions: As shown on the free-body diagram of the beam, Fig. *a*,

Maximum Moment: The maximum moment occurs when $V = 0$. Referring to the free-body diagram of the beam segment shown in Fig. *b*,

$$+\uparrow \Sigma F_y = 0; \qquad 3w - wx = 0 \qquad\qquad x = 3\text{ m}$$

$$\circlearrowleft + \Sigma M = 0; \qquad M_{\max} + w(3)\left(\frac{3}{2}\right) - 3w(3) = 0 \qquad\qquad M_{\max} = \frac{9}{2}w$$

Section Properties: The moment of inertia of the cross section about the neutral axis is

$$I = \frac{1}{36}(0.15)(0.3^3) = 0.1125(10^{-3})\text{ m}^4$$

Absolute Maximum Bending Stress: Here, $c = \frac{2}{3}(0.3) = 0.2\text{ m}$.

$$\sigma_{\text{allow}} = \frac{Mc}{I}; \qquad 150(10^6) = \frac{\frac{9}{2}w(0.2)}{0.1125(10^{-3})}$$

$$w = 18750\text{ N/m} = 18.75\text{ kN/m} \qquad \textbf{Ans.}$$

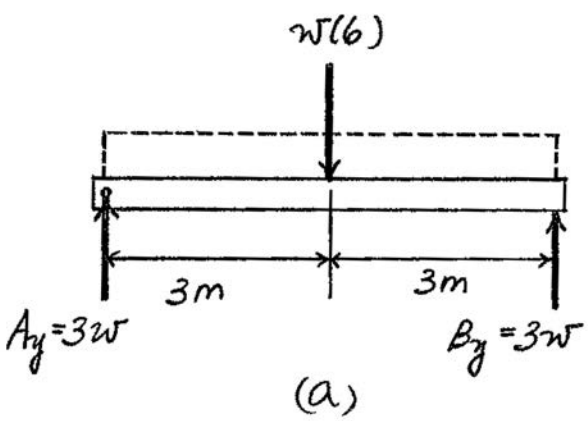

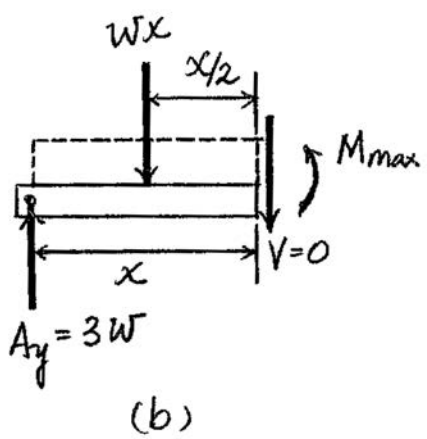

Ans:
$w = 18.75\text{ kN/m}$

6–86. Determine the absolute maximum bending stress in the 2-in.-diameter shaft which is subjected to the concentrated forces. The journal bearings at A and B only support vertical forces.

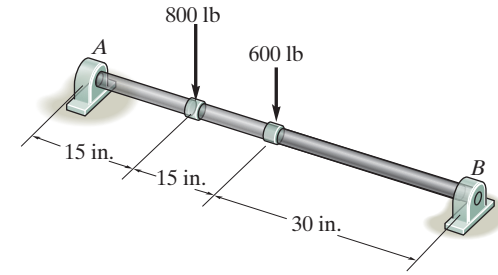

The FBD of the shaft is shown in Fig. *a*.

The shear and moment diagrams are shown in Fig. *b* and *c*, respectively. As indicated on the moment diagram, $M_{max} = 15000 \text{ lb} \cdot \text{in.}$

The moment of inertia of the cross section about the neutral axis is

$$I = \frac{\pi}{4}(1^4) = 0.25\,\pi \text{ in}^4$$

Here, $c = 1$ in. Thus

$$\sigma_{max} = \frac{M_{max}\,c}{I}$$

$$= \frac{15000(1)}{0.25\,\pi}$$

$$= 19.10(10^3) \text{ psi}$$

$$= 19.1 \text{ ksi}$$ **Ans.**

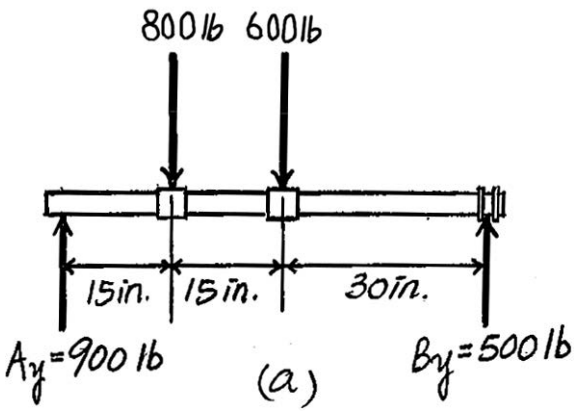

(a)

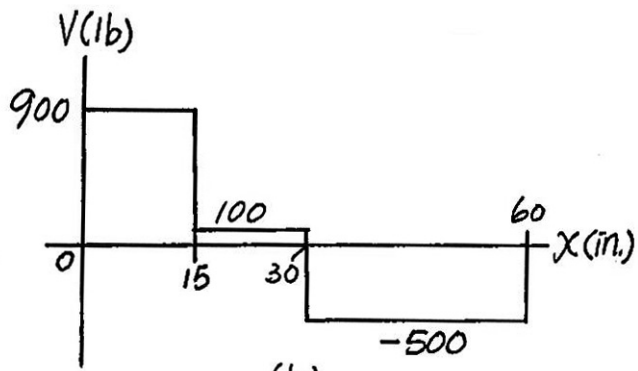

(b)

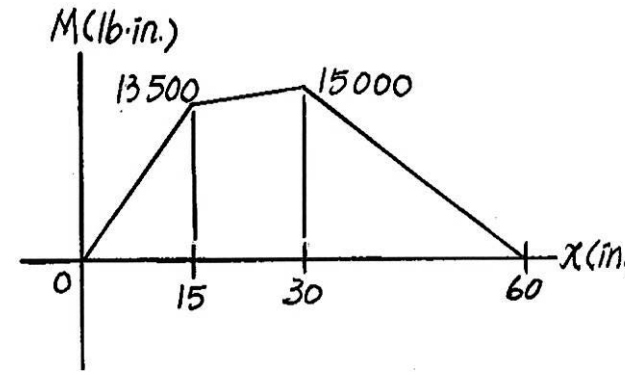

(c)

Ans:
$\sigma_{max} = 19.1$ ksi

6–87. Determine the smallest allowable diameter of the shaft which is subjected to the concentrated forces. The journal bearings at A and B only support vertical forces. The allowable bending stress is $\sigma_{\text{allow}} = 22$ ksi.

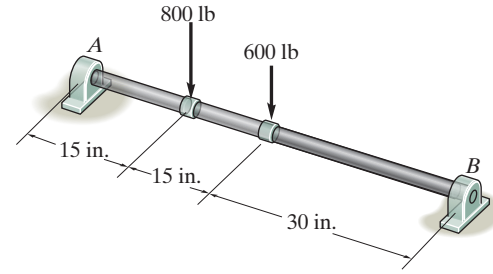

The FBD of the shaft is shown in Fig. *a*

The shear and moment diagrams are shown in Fig. *b* and *c*, respectively. As indicated on the moment diagram, $M_{\max} = 15{,}000 \text{ lb} \cdot \text{in}$

The moment of inertia of the cross section about the neutral axis is

$$I = \frac{\pi}{4}\left(\frac{d}{2}\right)^4 = \frac{\pi}{64} d^4$$

Here, $c = d/2$. Thus

$$\sigma_{\text{allow}} = \frac{M_{\max} c}{I}; \qquad 22(10^3) = \frac{15000(d/2)}{\pi d^4/64}$$

$$d = 1.908 \text{ in} = 2 \text{ in.} \qquad \textbf{Ans.}$$

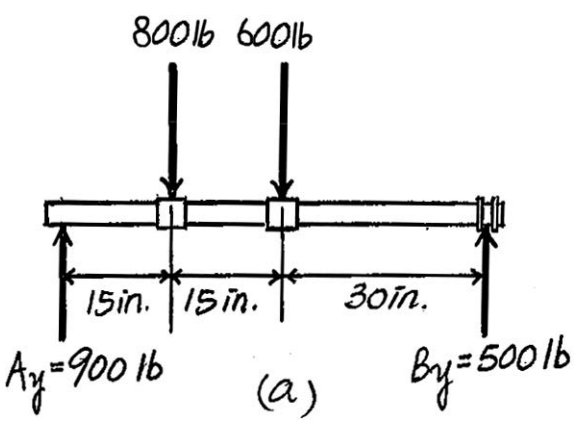

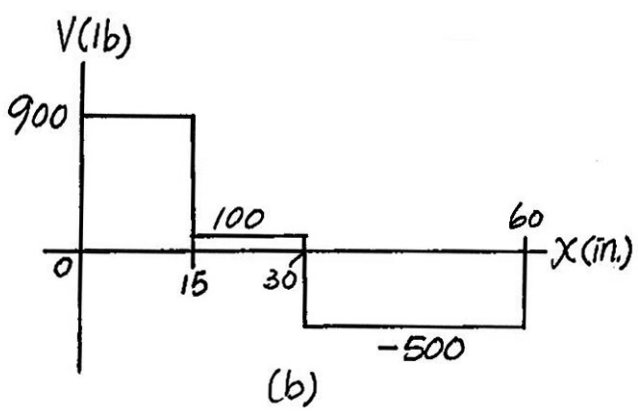

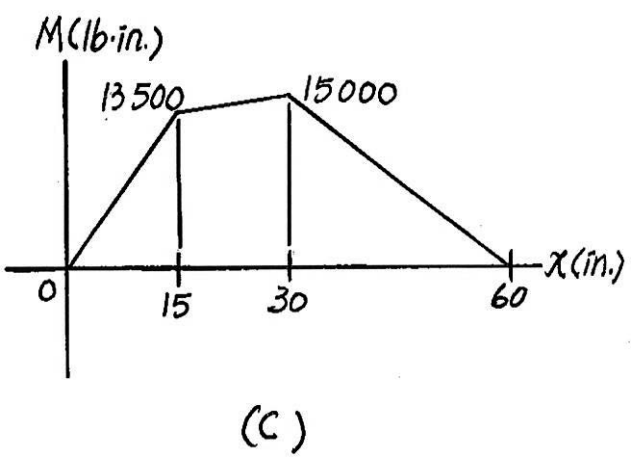

Ans:
$d = 2$ in.

***6–88.** If the beam has a square cross section of 9 in. on each side, determine the absolute maximum bending stress in the beam.

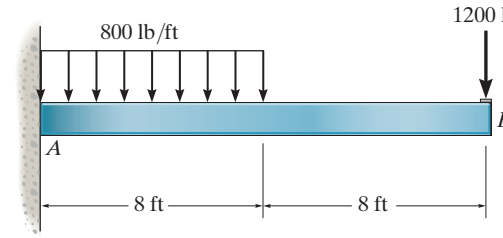

Absolute Maximum Bending Stress: The maximum moment is $M_{max} = 44.8 \text{ kip} \cdot \text{ft}$ as indicated on the moment diagram. Applying the flexure formula

$$\sigma_{max} = \frac{M_{max}\, c}{I} = \frac{44.8(12)(4.5)}{\frac{1}{12}(9)(9)^3} = 4.42 \text{ ksi}$$ **Ans.**

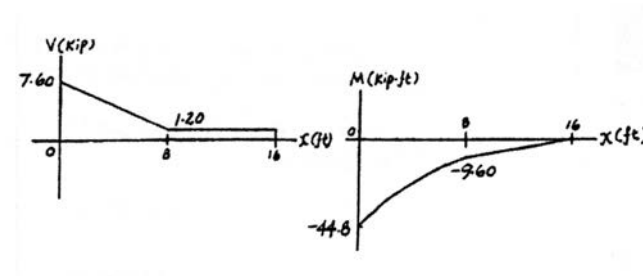

6–89. If the compound beam in Prob. 6–42 has a square cross section of side length a, determine the minimum value of a if the allowable bending stress is $\sigma_{\text{allow}} = 150$ MPa.

Allowable Bending Stress: The maximum moment is $M_{\max} = 7.50\ \text{kN}\cdot\text{m}$ as indicated on moment diagram. Applying the flexure formula

$$\sigma_{\max} = \sigma_{\text{allow}} = \frac{M_{\max}\, c}{I}$$

$$150\left(10^6\right) = \frac{7.50(10^3)\left(\frac{a}{2}\right)}{\frac{1}{12}\, a^4}$$

$$a = 0.06694\ \text{m} = 66.9\ \text{mm} \qquad \textbf{Ans.}$$

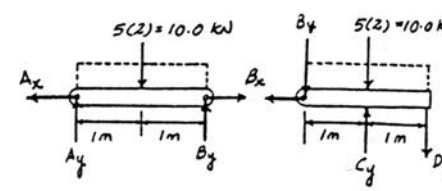

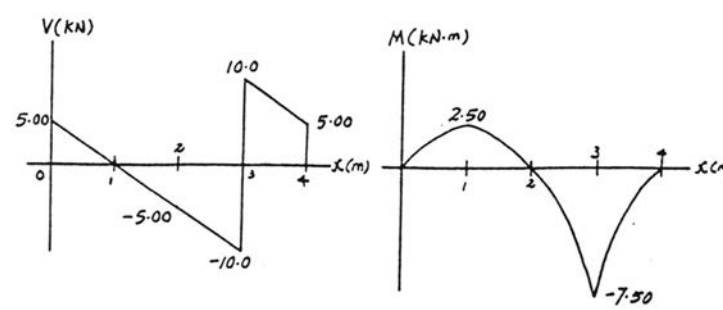

Ans:
$a = 66.9$ mm

6–90. If the beam in Prob. 6–28 has a rectangular cross section with a width b and a height h, determine the absolute maximum bending stress in the beam.

Absolute Maximum Bending Stress: The maximum moment is $M_{\max} = \dfrac{23w_0 L^2}{216}$ as indicated on the moment diagram. Applying the flexure formula

$$\sigma_{\max} = \frac{M_{\max}\, c}{I} = \frac{\frac{23w_0 L^2}{216}\left(\frac{h}{2}\right)}{\frac{1}{12}bh^3} = \frac{23w_0 L^2}{36bh^2} \qquad \textbf{Ans.}$$

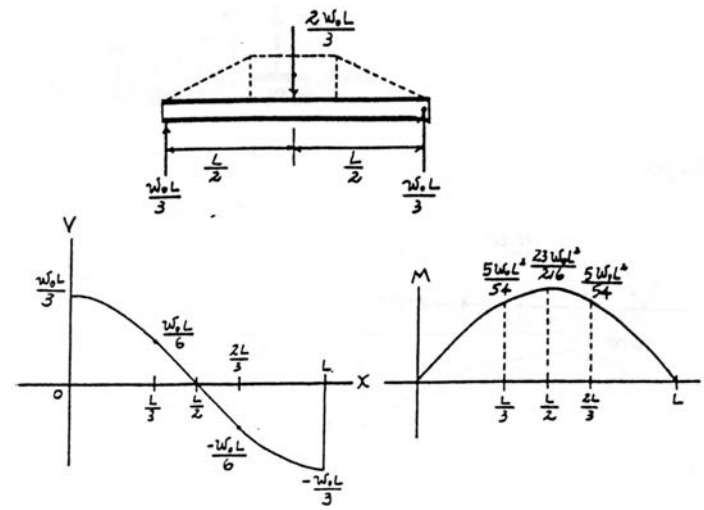

Ans:

$$\sigma_{\max} = \frac{23w_0 L^2}{36\, bh^2}$$

6–91. Determine the absolute maximum bending stress in the 80-mm-diameter shaft which is subjected to the concentrated forces. The journal bearings at A and B only support vertical forces.

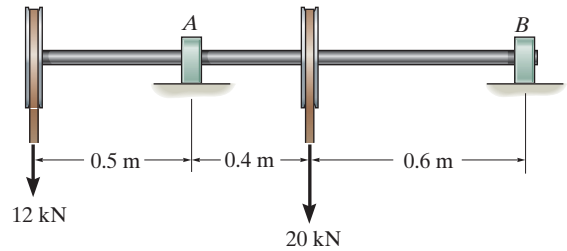

The FBD of the shaft is shown in Fig. *a*

The shear and moment diagrams are shown in Fig. *b* and *c*, respectively. As indicated on the moment diagram, $\left|M_{\max}\right| = 6\ \text{kN}\cdot\text{m}$.

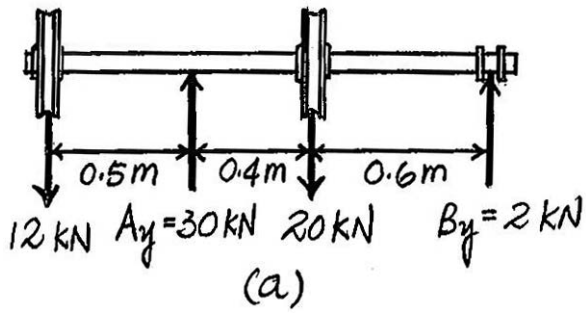

The moment of inertia of the cross section about the neutral axis is

$$I = \frac{\pi}{4}(0.04^4) = 0.64(10^{-6})\pi\ \text{m}^4$$

Here, $c = 0.04$ m. Thus

$$\sigma_{\max} = \frac{M_{\max}\,c}{I} = \frac{6(10^3)(0.04)}{0.64(10^{-6})\pi}$$

$$= 119.37(10^6)\ \text{Pa}$$

$$= 119\ \text{MPa}$$

Ans.

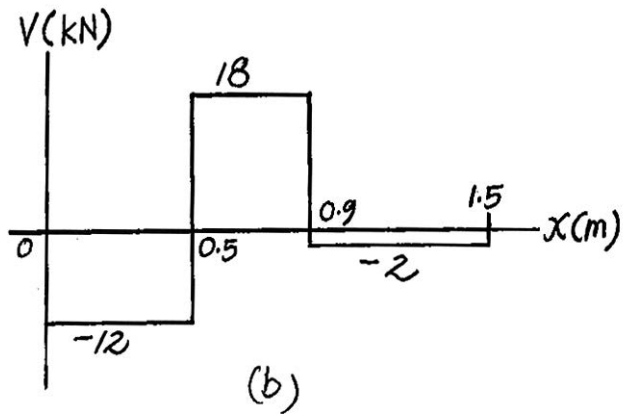

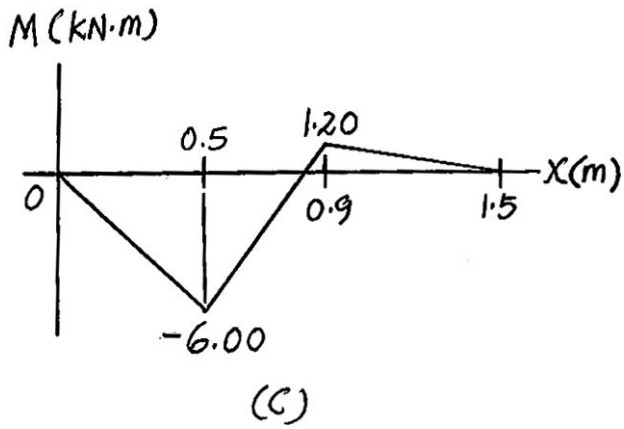

Ans:
$\sigma_{\max} = 119$ MPa

***6–92.** Determine, to the nearest millimeter, the smallest allowable diameter of the shaft which is subjected to the concentrated forces. The journal bearings at A and B only support vertical forces. The allowable bending stress is $\sigma_{\text{allow}} = 150$ MPa.

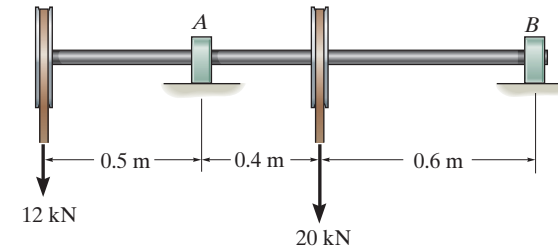

The FBD of the shaft is shown in Fig. *a*.

The shear and moment diagrams are shown in Fig. *b* and *c*, respectively. As indicated on the moment diagram, $\left|M_{\max}\right| = 6\ \text{kN}\cdot\text{m}$.

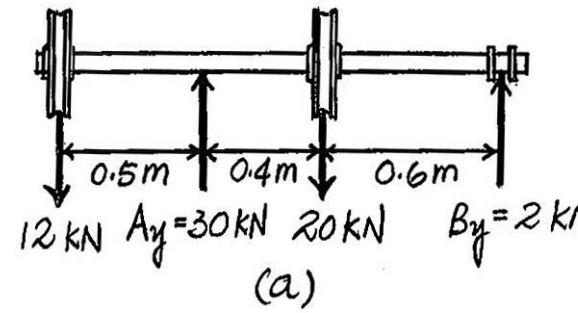

The moment of inertia of the cross section about the neutral axis is

$$I = \frac{\pi}{4}\left(\frac{d}{2}\right)^4 = \frac{\pi d^4}{64}$$

Here, $c = d/2$. Thus

$$\sigma_{\text{allow}} = \frac{M_{\max}\, c}{I}; \qquad 150(10^6) = \frac{6(10^3)(d/2)}{\pi d^4/64}$$

$$d = 0.07413\ \text{m} = 74.13\ \text{mm} = 75\ \text{mm} \qquad \textbf{Ans.}$$

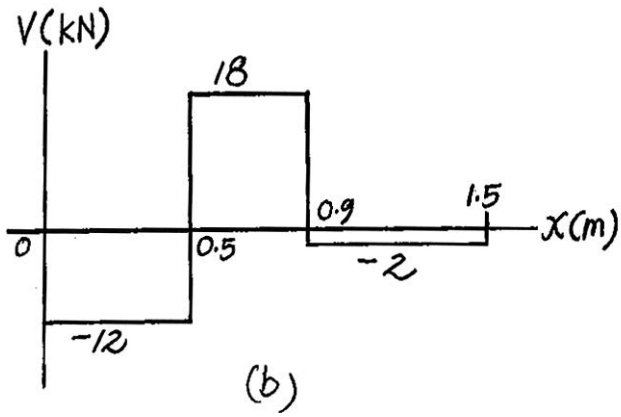

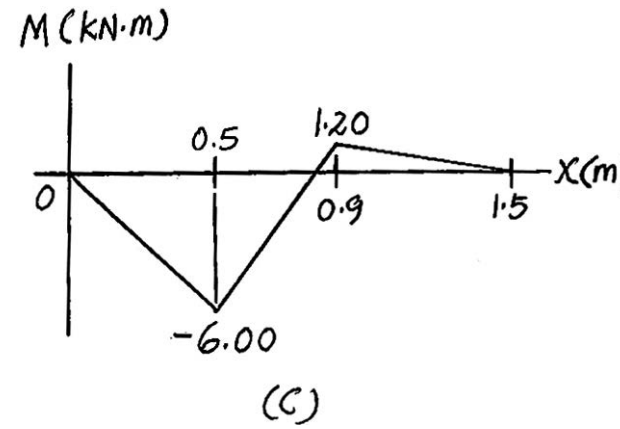

6–93. The wing spar ABD of a light plane is made from 2014–T6 aluminum and has a cross-sectional area of 1.27 in.^{2}, a depth of 3 in., and a moment of inertia about its neutral axis of 2.68 in^4. Determine the absolute maximum bending stress in the spar if the anticipated loading is to be as shown. Assume A, B, and C are pins. Connection is made along the central longitudinal axis of the spar.

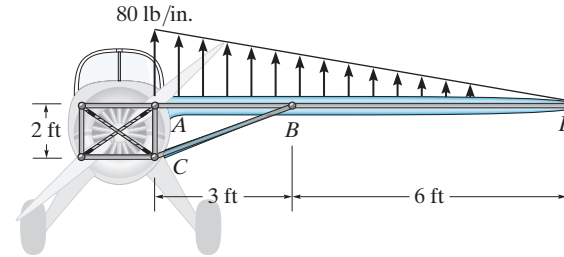

$$\sigma_{max} = \frac{Mc}{I}; \qquad \sigma_{max} = \frac{46080(1.5)}{2.68} = 25.8 \text{ ksi} \qquad \textbf{Ans.}$$

Note that 25.8 ksi $< \sigma_Y = 60$ ksi **OK**

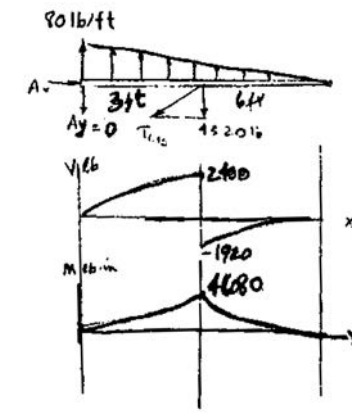

Ans:
$\sigma_{max} = 25.8$ ksi

6–94. The beam has a rectangular cross section as shown. Determine the largest load P that can be supported on its overhanging ends so that the bending stress does not exceed $\sigma_{max} = 10$ MPa.

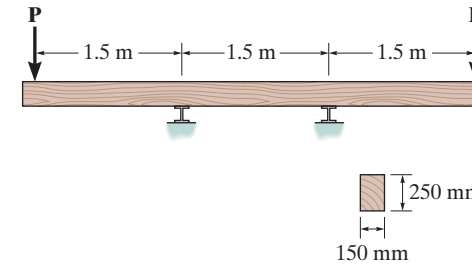

$$I = \frac{1}{12}(0.15)(0.25^3) = 1.953125(10^{-4})\ \text{m}^4$$

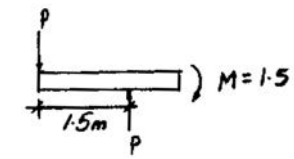

$$\sigma_{max} = \frac{Mc}{I}$$

$$10(10^6) = \frac{1.5P(0.125)}{1.953125(10^{-4})}$$

$$P = 10.4\ \text{kN}$$ **Ans.**

Ans:
$P = 10.4$ kN

6–95. The beam has the rectangular cross section shown. If $P = 12$ kN, determine the absolute maximum bending stress in the beam. Sketch the stress distribution acting over the cross section.

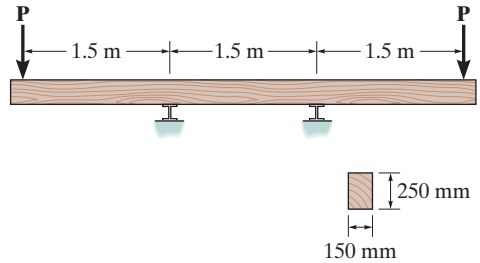

$$M = 1.5P = 1.5(12)(10^3) = 18000\ \text{N}\cdot\text{m}$$

$$I = \frac{1}{12}(0.15)(0.25^3) = 1.953125(10^{-4})\ \text{m}^4$$

$$\sigma_{\max} = \frac{Mc}{I} = \frac{18000(0.125)}{1.953125(10^{-4})} = 11.5\ \text{MPa}$$ **Ans.**

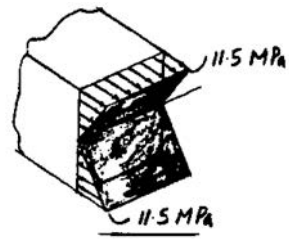

Ans:
$\sigma_{\max} = 11.5$ MPa

***6–96.** A log that is 2 ft in diameter is to be cut into a rectangular section for use as a simply supported beam. If the allowable bending stress for the wood is $\sigma_{\text{allow}} = 8$ ksi, determine the required width b and height h of the beam that will support the largest load possible. What is this load?

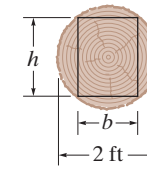

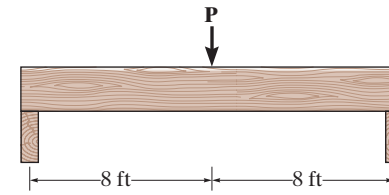

$$(24)^2 = b^2 + h^2$$

$$M_{\max} = \frac{P}{2}(8)(12) = 48P$$

$$\sigma_{\text{allow}} = \frac{Mc}{I} = \frac{M_{\max}(\frac{h}{2})}{\frac{1}{12}(b)(h)^3}$$

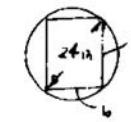

$$\sigma_{\text{allow}} = \frac{6\,M_{\max}}{bh^2}$$

$$bh^2 = \frac{6}{8000}(48\,P)$$

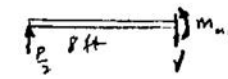

$$b(24)^2 - b^3 = 0.036\,P$$

$$(24)^2 - 3b^2 = 0.036\frac{dP}{db} = 0$$

$$b = 13.856 \text{ in.}$$

Thus, from the above equations,

$b = 13.9$ in. **Ans.**

$h = 19.6$ in. **Ans.**

$P = 148$ kip **Ans.**

6–97. A log that is 2 ft in diameter is to be cut into a rectangular section for use as a simply supported beam. If the allowable bending stress for the wood is $\sigma_{allow} = 8$ ksi, determine the largest load P that can be supported if the width of the beam is $b = 8$ in.

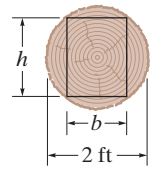

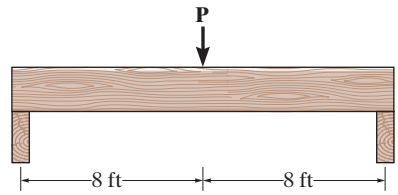

$$24^2 = h^2 + 8^2$$

$$h = 22.63 \text{ in.}$$

$$M_{max} = \frac{P}{2}(96) = 48\,P$$

$$\sigma_{allow} = \frac{M_{max}c}{I}$$

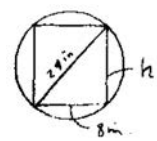

$$8(10^3) = \frac{48P(\frac{22.63}{2})}{\frac{1}{12}(8)(22.63)^3}$$

$$P = 114 \text{ kip}$$ **Ans.**

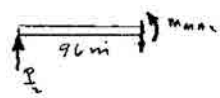

Ans:
$P = 114$ kip

6–98. If the beam in Prob. 6–18 has a rectangular cross section with a width of 8 in. and a height of 16 in., determine the absolute maximum bending stress in the beam.

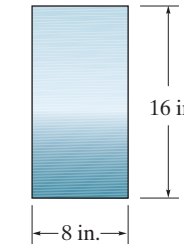

Absolute Maximum Bending Stress: The maximum moment is $M_{max} = 216$ kip · ft as indicated on moment diagram. Applying the flexure formula

$$\sigma_{max} = \frac{M_{max}\,c}{I} = \frac{216(12)(8)}{\frac{1}{12}(8)(16^3)} = 7.59 \text{ ksi} \qquad \textbf{Ans.}$$

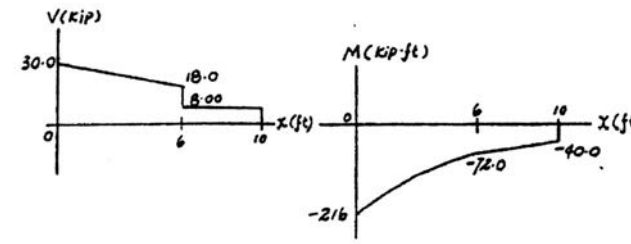

Ans:
$\sigma_{max} = 7.59$ ksi

6–99. If the beam has a square cross section of 6 in. on each side, determine the absolute maximum bending stress in the beam.

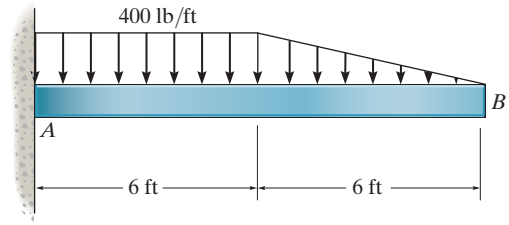

The maximum moment occurs at the fixed support A. Referring to the FBD shown in Fig. a,

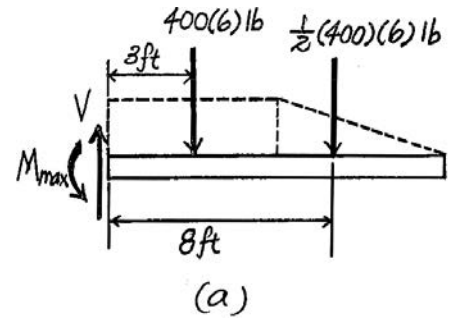

$$\circlearrowleft + \Sigma M_A = 0; \qquad M_{\max} - 400(6)(3) - \frac{1}{2}(400)(6)(8) = 0$$

$$M_{\max} = 16800 \text{ lb} \cdot \text{ft}$$

The moment of inertia of the cross section about the neutral axis is $I = \frac{1}{12}(6)(6^3) = 108 \text{ in}^4$. Thus,

$$\sigma_{\max} = \frac{Mc}{I} = \frac{16800(12)(3)}{108}$$

$$= 5600 \text{ psi} = 5.60 \text{ ksi} \qquad \textbf{Ans.}$$

Ans:
$\sigma_{\max} = 5.60$ ksi

***6–100.** If $d = 450$ mm, determine the absolute maximum bending stress in the overhanging beam.

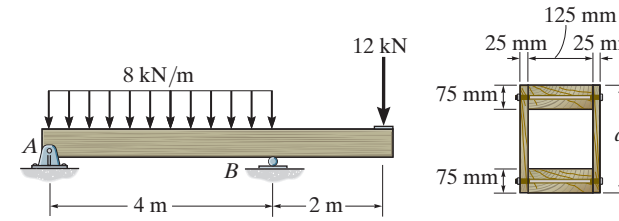

Support Reactions: Shown on the free-body diagram of the beam, Fig. *a*.

Maximum Moment: The shear and moment diagrams are shown in Figs. *b* and *c*. As indicated on the moment diagram, $M_{max} = 24\,\text{kN}\cdot\text{m}$.

Section Properties: The moment of inertia of the cross section about the neutral axis is

$$I = \frac{1}{12}(0.175)(0.45^3) - \frac{1}{12}(0.125)(0.3^3)$$

$$= 1.0477(10^{-3})\ \text{m}^4$$

Absolute Maximum Bending Stress: Here, $c = \dfrac{0.45}{2} = 0.225$ m.

$$\sigma_{max} = \frac{M_{max}\,c}{I} = \frac{24(10^3)(0.225)}{1.0477(10^{-3})} = 5.15\ \text{MPa}$$ **Ans.**

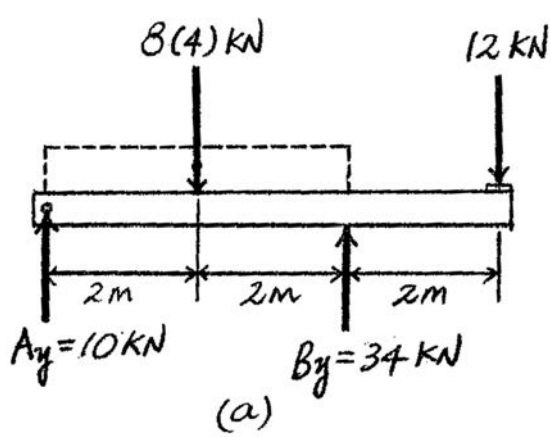

(a)

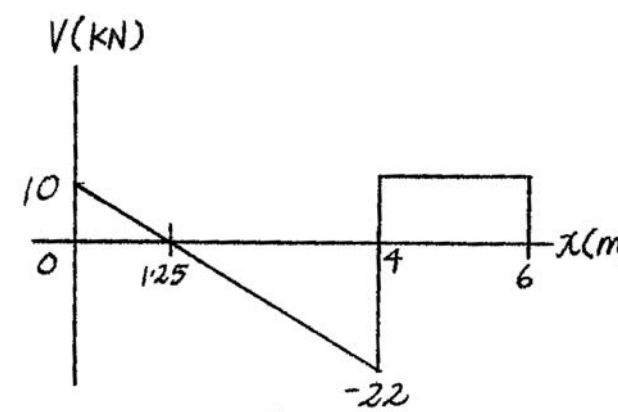

(b)

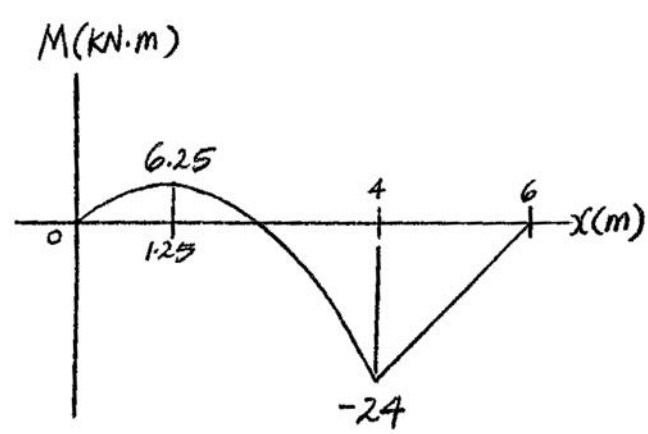

(c)

6–101. If wood used for the beam has an allowable bending stress of $\sigma_{\text{allow}} = 6\ \text{MPa}$, determine the minimum dimension d of the beam's cross-sectional area to the nearest mm.

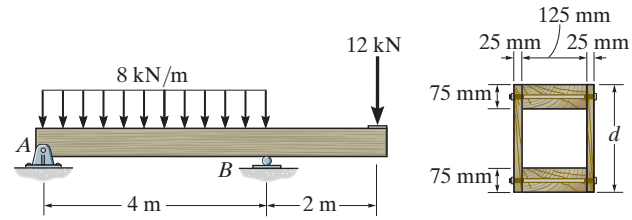

Support Reactions: Shown on the free-body diagram of the beam, Fig. *a*.

Maximum Moment: The shear and moment diagrams are shown in Figs. *b* and *c*. As indicated on the moment diagram, $M_{\max} = 24\ \text{kN}\cdot\text{m}$.

Section Properties: The moment of inertia of the cross section about the neutral axis is

$$I = \frac{1}{12}(0.175)d^3 - \frac{1}{12}(0.125)(d - 0.15)^3$$

$$= 4.1667(10^{-3})d^3 + 4.6875(10^{-3})d^2 - 0.703125(10^{-3})d + 35.15625(10^{-6})$$

Absolute Maximum Bending Stress: Here, $c = \dfrac{d}{2}$.

$$\sigma_{\text{allow}} = \frac{Mc}{I};$$

$$6(10^6) = \frac{24(10^3)\dfrac{d}{2}}{4.1667(10^{-3})d^3 + 4.6875(10^{-3})d^2 - 0.703125(10^{-3})d + 35.15625(10^{-6})}$$

$$4.1667(10^{-3})d^3 + 4.6875(10^{-3})d^2 - 2.703125(10^{-3})d + 35.15625(10^{-6}) = 0$$

Solving,

$$d = 0.4094\ \text{m} = 410\ \text{mm}$$ **Ans.**

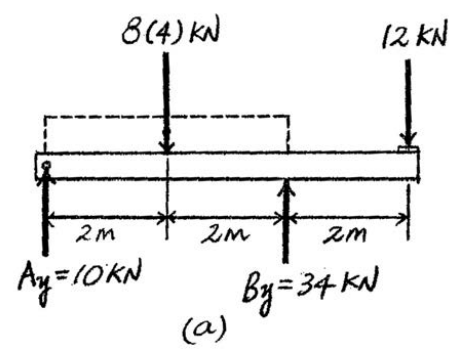

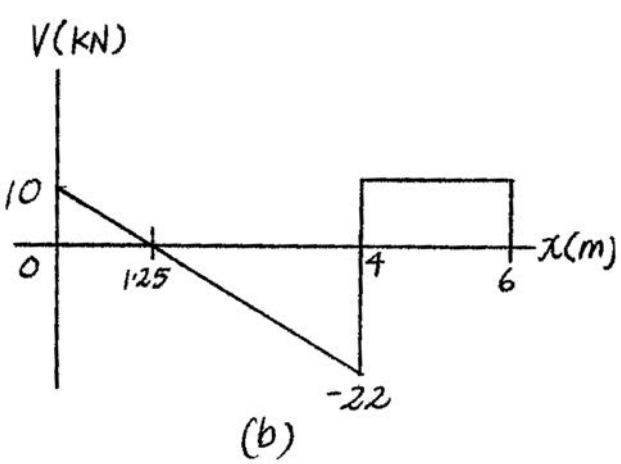

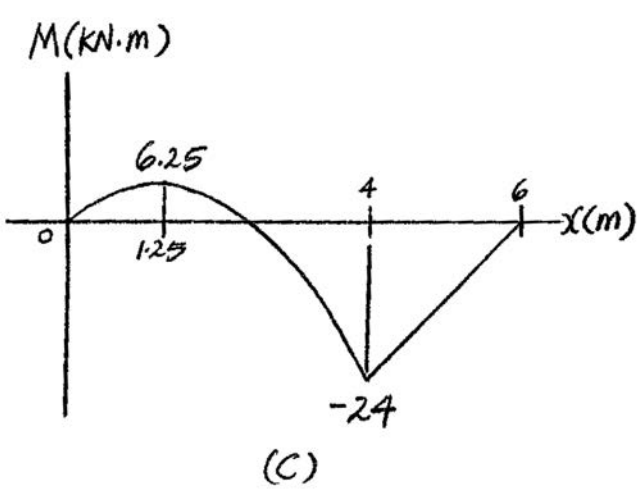

Ans:
$d = 410\ \text{mm}$

6–102. If the concentrated force $P = 2$ kN is applied at the free end of the overhanging beam, determine the absolute maximum tensile and compressive stress developed in the beam.

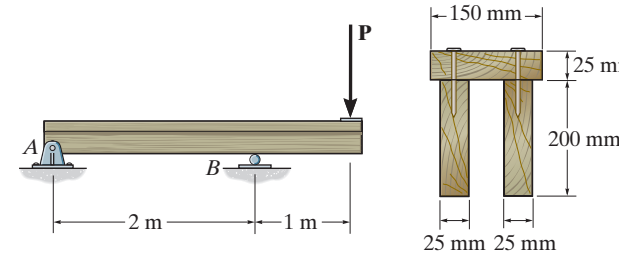

Support Reactions: Shown on the free-body diagram of the beam, Fig. *a*.

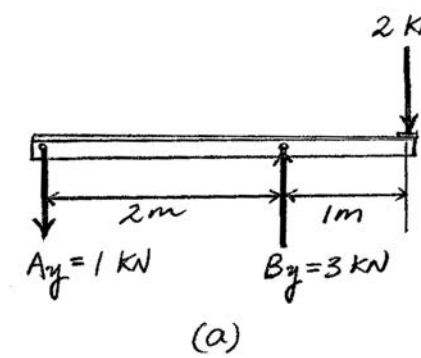

Maximum Moment: The shear and moment diagrams are shown in Figs. *b* and *c*. As indicated on the moment diagram, the maximum moment is $|M_{max}| = 2\,\text{kN}\cdot\text{m}$.

Section Properties: The neutral axis passes through the centroid C of the cross section as shown in Fig. *d*.

The location of C is given by

$$\bar{y} = \frac{\Sigma \tilde{y} A}{\Sigma A} = \frac{2[0.1(0.2)(0.025)] + 0.2125(0.025)(0.15)}{2(0.2)(0.025) + 0.025(0.15)} = 0.13068 \text{ m}$$

Thus, the moment of inertia of the cross section about the neutral axis is

$$I = \Sigma \bar{I} + Ad^2$$

$$= 2\left[\frac{1}{12}(0.025)(0.2^3) + 0.025(0.2)(0.13068 - 0.1)^2\right] + \frac{1}{12}(0.15)(0.025^3) + 0.15(0.025)(0.2125 - 0.13068)^2$$

$$= 68.0457(10^{-6})\text{ m}^4$$

Absolute Maximum Bending Stress: The maximum tensile and compressive stress occurs at the top and bottom-most fibers of the cross section.

$$(\sigma_{max})_t = \frac{M_{max} y}{I} = \frac{2(10^3)(0.225 - 0.13068)}{68.0457(10^{-6})} = 2.77\text{ MPa}$$ **Ans.**

$$(\sigma_{max})_c = \frac{M_{max} c}{I} = \frac{2(10^3)(0.13068)}{68.0457(10^{-6})} = 3.84\text{ MPa}$$ **Ans.**

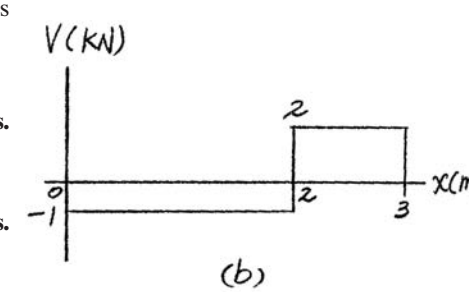

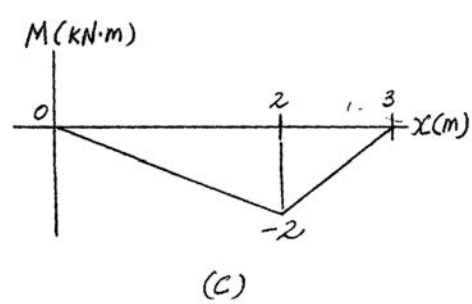

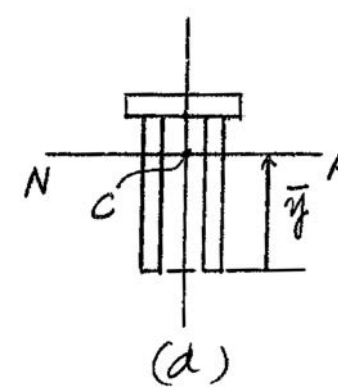

Ans:
$(\sigma_{max})_t = 2.77\text{ MPa}$, $(\sigma_{max})_c = 3.84\text{ MPa}$

6–103. If the overhanging beam is made of wood having the allowable tensile and compressive stresses of $(\sigma_{\text{allow}})_t = 4$ MPa and $(\sigma_{\text{allow}})_c = 5$ MPa, determine the maximum concentrated force **P** that can applied at the free end.

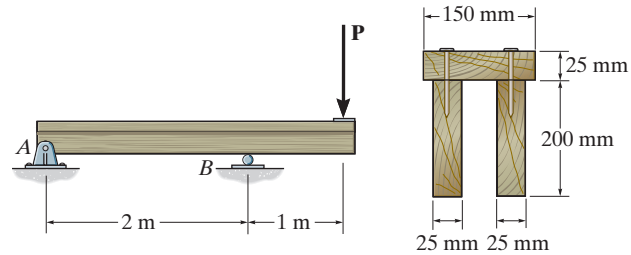

Support Reactions: Shown on the free-body diagram of the beam, Fig. *a*.

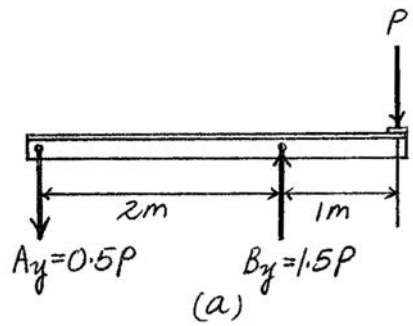

Maximum Moment: The shear and moment diagrams are shown in Figs. *b* and *c*. As indicated on the moment diagram, the maximum moment is $|M_{\max}| = P$.

Section Properties: The neutral axis passes through the centroid C of the cross section as shown in Fig. *d*. The location of C is given by

$$\bar{y} = \frac{\Sigma \tilde{y} A}{\Sigma A} = \frac{2[0.1(0.2)(0.025)] + 0.2125(0.025)(0.15)}{2(0.2)(0.025) + 0.025(0.15)} = 0.13068 \text{ m}$$

The moment of inertia of the cross section about the neutral axis is

$$\begin{aligned} I &= \Sigma \bar{I} + Ad^2 \\ &= 2\left[\frac{1}{12}(0.025)(0.2^3) + 0.025(0.2)(0.13068 - 0.1)^2\right] + \frac{1}{12}(0.15)(0.025^3) + 0.15(0.025)(0.2125 - 0.13068)^2 \\ &= 68.0457(10^{-6}) \text{ m}^4 \end{aligned}$$

Absolute Maximum Bending Stress: The maximum tensile and compressive stresses occur at the top and bottom-most fibers of the cross section. For the top fiber,

$$(\sigma_{\text{allow}})_t = \frac{M_{\max} y}{I}; \qquad 4(10^6) = \frac{P(0.225 - 0.13068)}{68.0457(10^{-6})}$$

$$P = 2885.79 \text{ N} = 2.89 \text{ kN}$$

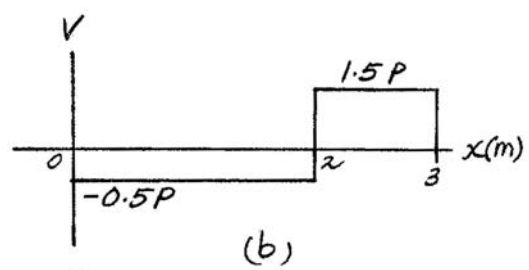

For the top fiber,

$$(\sigma_{\text{allow}})_c = \frac{M_{\max} c}{I} \quad 5(10^6) = \frac{P(0.13068)}{68.0457(10^{-6})}$$

$$P = 2603.49 \text{ N} = 2.60 \text{ kN (controls)}$$ **Ans.**

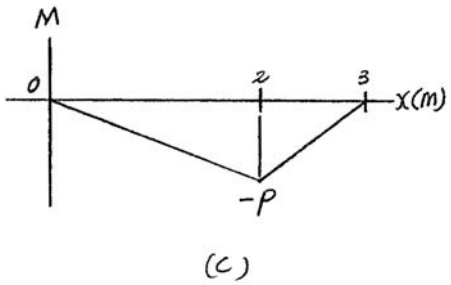

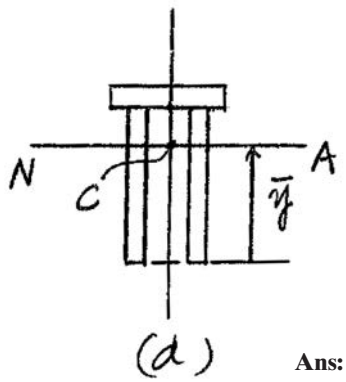

Ans:
$P = 2.60$ kN

***6–104.** The member has a square cross section and is subjected to a resultant internal bending moment of $M = 850\ \text{N}\cdot\text{m}$ as shown. Determine the stress at each corner and sketch the stress distribution produced by **M**. Set $\theta = 45°$.

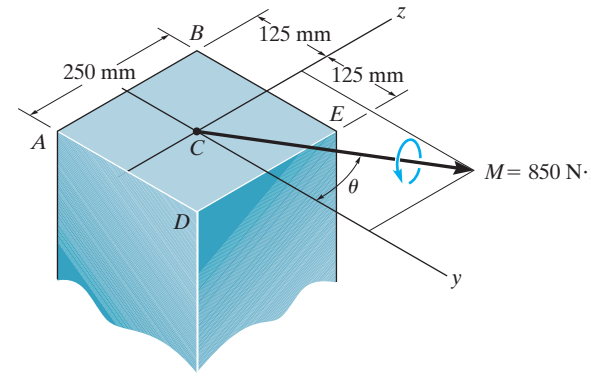

$$M_y = 850 \cos 45° = 601.04\ \text{N}\cdot\text{m}$$

$$M_z = 850 \sin 45° = 601.04\ \text{N}\cdot\text{m}$$

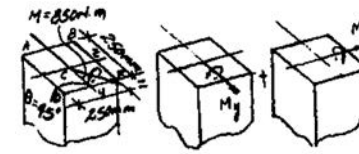

$$I_z = I_y = \frac{1}{12}(0.25)(0.25)^3 = 0.3255208(10^{-3})\ \text{m}^4$$

$$\sigma = -\frac{M_z y}{I_z} + \frac{M_y z}{I_y}$$

$$\sigma_A = -\frac{601.04(-0.125)}{0.3255208(10^{-3})} + \frac{601.04(-0.125)}{0.3255208(10^{-3})} = 0 \qquad \textbf{Ans.}$$

$$\sigma_B = -\frac{601.04(-0.125)}{0.3255208(10^{-3})} + \frac{601.04(0.125)}{0.3255208(10^{-3})} = 462\ \text{kPa} \qquad \textbf{Ans.}$$

$$\sigma_D = -\frac{601.04(0.125)}{0.3255208(10^{-3})} + \frac{601.04(-0.125)}{0.3255208(10^{-3})} = -462\ \text{kPa} \qquad \textbf{Ans.}$$

$$\sigma_E = -\frac{601.04(0.125)}{0.3255208(10^{-3})} + \frac{601.04(0.125)}{0.3255208(10^{-3})} = 0 \qquad \textbf{Ans.}$$

The negative sign indicates compressive stress.

6–105. The member has a square cross section and is subjected to a resultant internal bending moment of $M = 850\ \text{N}\cdot\text{m}$ as shown. Determine the stress at each corner and sketch the stress distribution produced by **M**. Set $\theta = 30°$.

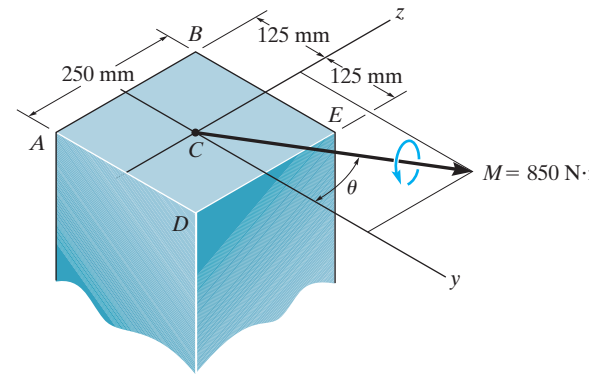

$$M_y = 850 \cos 30° = 736.12\ \text{N}\cdot\text{m}$$

$$M_z = 850 \sin 30° = 425\ \text{N}\cdot\text{m}$$

$$I_z = I_y = \frac{1}{12}(0.25)(0.25)^3 = 0.3255208(10^{-3})\ \text{m}^4$$

$$\sigma = -\frac{M_z y}{I_z} + \frac{M_y z}{I_y}$$

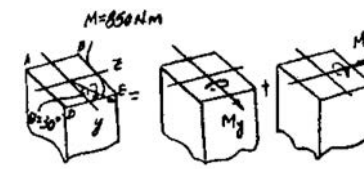

$$\sigma_A = -\frac{425(-0.125)}{0.3255208(10^{-3})} + \frac{736.12(-0.125)}{0.3255208(10^{-3})} = -119\ \text{kPa}$$ **Ans.**

$$\sigma_B = -\frac{425(-0.125)}{0.3255208(10^{-3})} + \frac{736.12(0.125)}{0.3255208(10^{-3})} = 446\ \text{kPa}$$ **Ans.**

$$\sigma_D = -\frac{425(0.125)}{0.3255208(10^{-3})} + \frac{736.12(-0.125)}{0.3255208(10^{-3})} = -446\ \text{kPa}$$ **Ans.**

$$\sigma_E = -\frac{425(0.125)}{0.3255208(10^{-3})} + \frac{736.12(0.125)}{0.3255208(10^{-3})} = 119\ \text{kPa}$$ **Ans.**

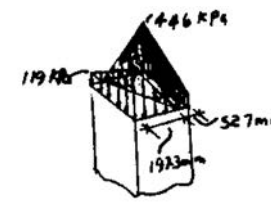

The negative signs indicate compressive stress.

Ans:
$\sigma_A = -119$ kPa, $\sigma_B = 446$ kPa, $\sigma_D = -446$ kPa, $\sigma_E = 119$ kPa

6–106. Consider the general case of a prismatic beam subjected to bending-moment components $\mathbf{M}_y$ and $\mathbf{M}_z$, as shown, when the x, y, z axes pass through the centroid of the cross section. If the material is linear-elastic, the normal stress in the beam is a linear function of position such that $\sigma = a + by + cz$. Using the equilibrium conditions

$$0 = \int_A \sigma\, dA \qquad M_y = \int_A z\,\sigma\, dA, \qquad M_z = \int_A -y\,\sigma\, dA,$$

determine the constants a, b, and c, and show that the normal stress can be determined from the equation $\sigma = [-(M_z I_y + M_y I_{yz})y + (M_y I_z + M_z I_{yz})z]/(I_y I_z - I_{yz}^2)$, where the moments and products of inertia are defined in Appendix A.

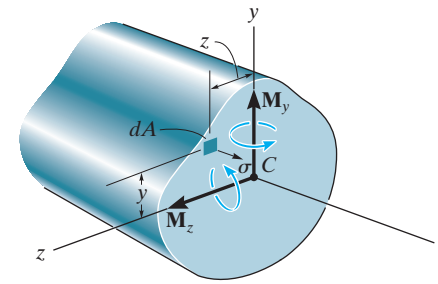

Equilibrium Condition: $\sigma_x = a + by + cz$

$$0 = \int_A \sigma_x\, dA$$

$$0 = \int_A (a + by + cz)\, dA$$

$$0 = a\int_A dA + b\int_A y\, dA + c\int_A z\, dA \qquad \textbf{(1)}$$

$$M_y = \int_A z\,\sigma_x\, dA$$

$$= \int_A z(a + by + cz)\, dA$$

$$= a\int_A z\, dA + b\int_A yz\, dA + c\int_A z^2\, dA \qquad \textbf{(2)}$$

$$M_z = \int_A -y\,\sigma_x\, dA$$

$$= \int_A -y(a + by + cz)\, dA$$

$$= -a\int_A y dA - b\int_A y^2\, dA - c\int_A yz\, dA \qquad \textbf{(3)}$$

Section Properties: The integrals are defined in Appendix A. Note that $\int_A y\, dA = \int_A z\, dA = 0$. Thus,

From Eq. (1) $\qquad Aa = 0$

From Eq. (2) $\qquad M_y = bI_{yz} + cI_y$

From Eq. (3) $\qquad M_z = -bI_z - cI_{yz}$

Solving for a, b, c:

$$a = 0 \text{ (Since } A \neq 0)$$

$$b = -\left(\frac{M_z I_y + M_y I_{yz}}{I_y I_z - I_{yz}^2}\right) \qquad c = \frac{M_y I_z + M_z I_{yz}}{I_y I_z - I_{yz}^2}$$

Thus, $\sigma_x = -\left(\dfrac{M_z I_y + M_y I_{yz}}{I_y I_z - I_{yz}^2}\right)y + \left(\dfrac{M_y I_y + M_z I_{yz}}{I_y I_z - I_{yz}^2}\right)z$ **(Q.E.D.)**

Ans:

$$a = 0;\ b = -\left(\frac{M_z I_y + M_y I_{yz}}{I_y I_z - I_{yz}^2}\right);\ c = \frac{M_y I_z + M_z I_{yz}}{I_y I_z - I_{yz}^2}$$

6–107. If the beam is subjected to the internal moment of $M = 2\ \text{kN}\cdot\text{m}$, determine the maximum bending stress developed in the beam and the orientation of the neutral axis.

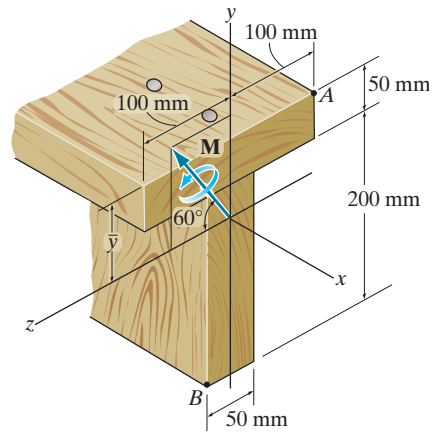

Internal Moment Components: The y and z components of **M** are positive since they are directed towards the positive sense of their respective axes, Fig. *a*. Thus,

$$M_y = 2\sin 60^\circ = 1.732\ \text{kN}\cdot\text{m}$$

$$M_z = 2\cos 60^\circ = 1\ \text{kN}\cdot\text{m}$$

Section Properties: The location of the centroid of the cross-section is

$$\bar{y} = \frac{\Sigma \tilde{y} A}{\Sigma A} = \frac{0.025(0.05)(0.2) + 0.15(0.2)(0.05)}{0.05(0.2) + 0.2(0.05)} = 0.0875\ \text{m}$$

The moments of inertia of the cross section about the principal centroidal y and z axes are

$$I_y = \frac{1}{12}(0.05)(0.2^3) + \frac{1}{12}(0.2)(0.05^3) = 35.4167(10^{-6})\ \text{m}^4$$

$$I_z = \frac{1}{12}(0.2)(0.05^3) + 0.2(0.05)(0.0875 - 0.025)^2 + \frac{1}{12}(0.05)(0.2^3) + 0.05(0.2)(0.15 - 0.0875)^2$$
$$= 0.1135(10^{-3})\ \text{m}^4$$

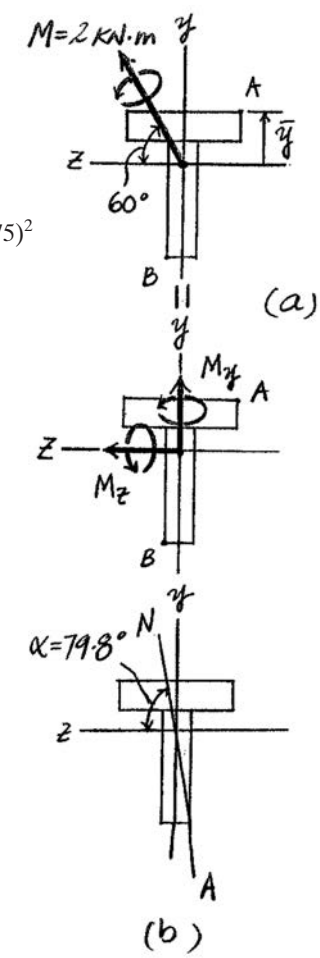

Bending Stress: By inspection, the maximum bending stress occurs at either corner A or B.

$$\sigma = -\frac{M_z y}{I_z} + \frac{M_y z}{I_y}$$

$$\sigma_A = -\frac{1(10^3)(0.0875)}{0.1135(10^{-3})} + \frac{1.732(10^3)(-0.1)}{35.4167(10^{-6})}$$

$$= -5.66\ \text{MPa} = 5.66\ \text{MPa (C) (Max.)} \qquad \textbf{Ans.}$$

$$\sigma_B = -\frac{1(10^3)(-0.1625)}{0.1135(10^{-3})} + \frac{1.732(10^3)(0.025)}{35.4167(10^{-6})}$$

$$= 2.65\ \text{MPa (T)}$$

Orientation of Neutral Axis: Here, $\theta = 60^\circ$.

$$\tan\alpha = \frac{I_z}{I_y}\tan\theta$$

$$\tan\alpha = \frac{0.1135(10^{-3})}{35.4167(10^{-6})}\tan 60^\circ$$

$$\alpha = 79.8^\circ \qquad \textbf{Ans.}$$

The orientation of the neutral axis is shown in Fig. *b*.

Ans:
$\sigma_{\max} = 5.66\ \text{MPa (C)},\ \alpha = 79.8^\circ$

***6–108.** If the wood used for the T-beam has an allowable tensile and compressive stress of $(\sigma_{\text{allow}})_t = 4$ MPa and $(\sigma_{\text{allow}})_c = 6$ MPa, respectively, determine the maximum allowable internal moment **M** that can be applied to the beam.

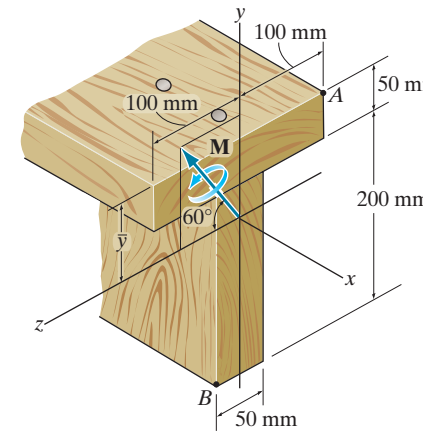

Internal Moment Components: The y and z components of **M** are positive since they are directed towards the positive sense of their respective axes, Fig. *a*. Thus,

$$M_y = M \sin 60° = 0.8660M$$

$$M_z = M \cos 60° = 0.5M$$

Section Properties: The location of the centroid of the cross section is

$$\bar{y} = \frac{\Sigma \tilde{y} A}{\Sigma A} = \frac{0.025(0.05)(0.2) + 0.15(0.2)(0.05)}{0.05(0.2) + 0.2(0.05)} = 0.0875 \text{ m}$$

The moments of inertia of the cross section about the principal centroidal y and z axes are

$$I_y = \frac{1}{12}(0.05)(0.2^3) + \frac{1}{12}(0.2)(0.05^3) = 35.417(10^{-6}) \text{ m}^4$$

$$I_z = \frac{1}{12}(0.2)(0.05^3) + 0.2(0.05)(0.0875 - 0.025)^2 + \frac{1}{12}(0.05)(0.2^3) + 0.05(0.2)(0.15 - 0.0875)^2$$
$$= 0.1135(10^{-3}) \text{ m}^4$$

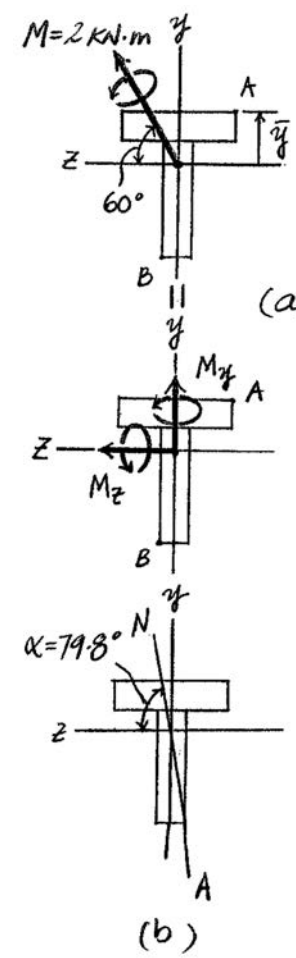

Bending Stress: By inspection, the maximum bending stress can occur at either corner A or B. For corner A, which is in compression,

$$\sigma_A = (\sigma_{\text{allow}})_c = -\frac{M_z y_A}{I_z} + \frac{M_y z_A}{I_y}$$

$$-6(10^6) = -\frac{0.5M(0.0875)}{0.1135(10^{-3})} + \frac{0.8660M(-0.1)}{35.417(10^{-6})}$$

$$M = 2119.71 \text{ N} \cdot \text{m} = 2.12 \text{ kN} \cdot \text{m (controls)}$$ **Ans.**

For corner B which is in tension,

$$\sigma_B = (\sigma_{\text{allow}})_t = -\frac{M_z y_B}{I_z} + \frac{M_y z_B}{I_y}$$

$$4(10^6) = -\frac{0.5M(-0.1625)}{0.1135(10^{-3})} + \frac{0.8660M(0.025)}{35.417(10^{-6})}$$

$$M = 3014.53 \text{ N} \cdot \text{m} = 3.01 \text{ kN} \cdot \text{m}$$

6–109. The box beam is subjected to the internal moment of $M = 4$ kN · m, which is directed as shown. Determine the maximum bending stress developed in the beam and the orientation of the neutral axis.

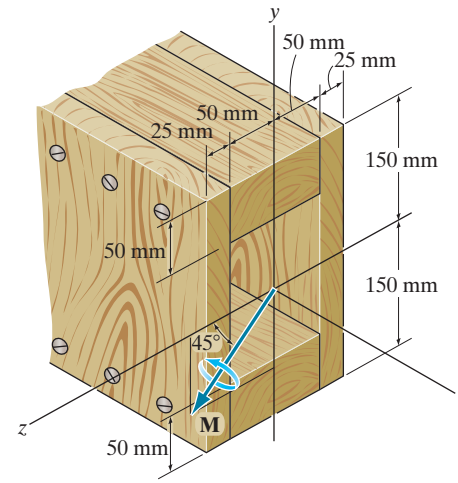

Internal Moment Components: The y component of **M** is negative since it is directed towards the negative sense of the y axis, whereas the z component of **M** which is directed towards the positive sense of the z axis is positive, Fig. a. Thus,

$$M_y = -4 \sin 45° = -2.828 \text{ kN} \cdot \text{m}$$

$$M_z = 4 \cos 45° = 2.828 \text{ kN} \cdot \text{m}$$

Section Properties: The moments of inertia of the cross section about the principal centroidal y and z axes are

$$I_y = \frac{1}{12}(0.3)(0.15^3) - \frac{1}{12}(0.2)(0.1^3) = 67.7083(10^{-6}) \text{ m}^4$$

$$I_z = \frac{1}{12}(0.15)(0.3^3) - \frac{1}{12}(0.1)(0.2^3) = 0.2708(10^{-3}) \text{ m}^4$$

Bending Stress: By inspection, the maximum bending stress occurs at corners A and D.

$$\sigma = -\frac{M_z y}{I_z} + \frac{M_y z}{I_y}$$

$$\sigma_{\max} = \sigma_A = -\frac{2.828(10^3)(0.15)}{0.2708(10^{-3})} + \frac{(-2.828)(10^3)(0.075)}{67.7083(10^{-6})}$$

$$= -4.70 \text{ MPa} = 4.70 \text{ MPa (C)} \qquad \textbf{Ans.}$$

$$\sigma_{\max} = \sigma_D = -\frac{2.828(10^3)(-0.15)}{0.2708(10^{-3})} + \frac{(-2.828)(10^3)(-0.075)}{67.7083(10^{-6})}$$

$$= 4.70 \text{ MPa (T)} \qquad \textbf{Ans.}$$

Orientation of Neutral Axis: Here, $\theta = -45°$.

$$\tan \alpha = \frac{I_z}{I_y} \tan \theta$$

$$\tan \alpha = \frac{0.2708(10^{-3})}{67.7083(10^{-6})} \tan(-45°)$$

$$\alpha = -76.0° \qquad \textbf{Ans.}$$

The orientation of the neutral axis is shown in Fig. b.

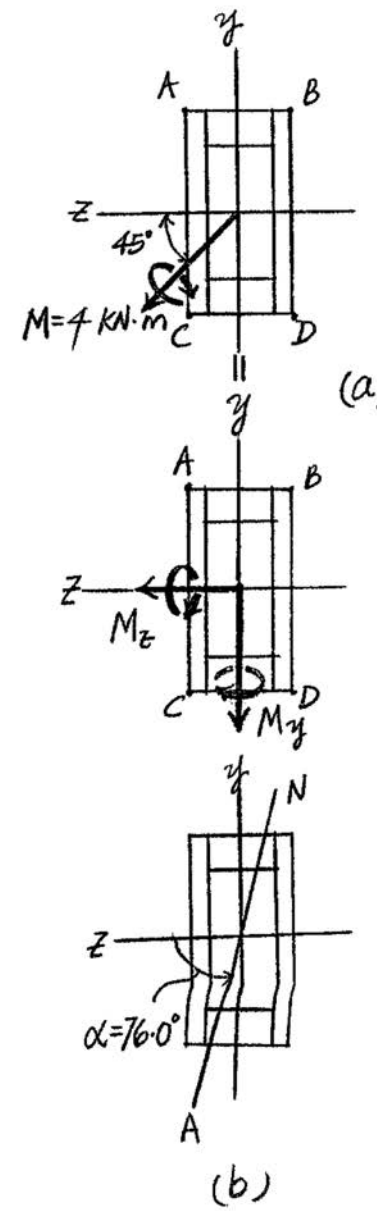

Ans:
$\sigma_{\max} = 4.70$ MPa, $\alpha = -76.0°$

6–110. If the wood used for the box beam has an allowable bending stress of $(\sigma_{\text{allow}}) = 6$ MPa, determine the maximum allowable internal moment **M** that can be applied to the beam.

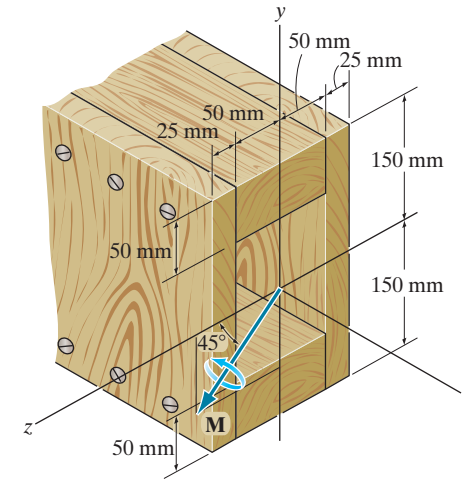

Internal Moment Components: The y component of **M** is negative since it is directed towards the negative sense of the y axis, whereas the z component of **M**, which is directed towards the positive sense of the z axis, is positive, Fig. a. Thus,

$$M_y = -M \sin 45^\circ = -0.7071M$$

$$M_z = M \cos 45^\circ = 0.7071M$$

Section Properties: The moments of inertia of the cross section about the principal centroidal y and z axes are

$$I_y = \frac{1}{12}(0.3)(0.15^3) - \frac{1}{12}(0.2)(0.1^3) = 67.708(10^{-6})\ \text{m}^4$$

$$I_z = \frac{1}{12}(0.15)(0.3^3) - \frac{1}{12}(0.1)(0.2^3) = 0.2708(10^{-3})\ \text{m}^4$$

Bending Stress: By inspection, the maximum bending stress occurs at corners A and D. Here, we will consider corner D.

$$\sigma_D = \sigma_{\text{allow}} = -\frac{M_z y_D}{I_z} + \frac{M_y z_D}{I_y}$$

$$6(10^6) = -\frac{0.7071M(-0.15)}{0.2708(10^{-3})} + \frac{(-0.7071M)(-0.075)}{67.708(10^{-6})}$$

$$M = 5106.88\ \text{N}\cdot\text{m} = 5.11\ \text{kN}\cdot\text{m}$$ **Ans.**

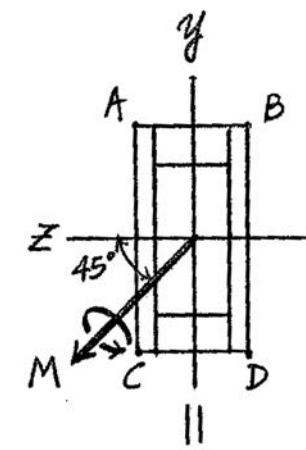

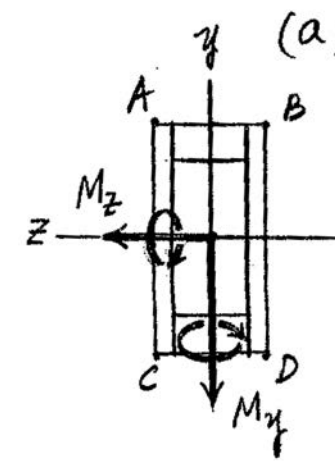

Ans:
$M = 5.11\ \text{kN}\cdot\text{m}$

6–111. If the beam is subjected to the internal moment of $M = 1200\ \text{kN}\cdot\text{m}$, determine the maximum bending stress acting on the beam and the orientation of the neutral axis.

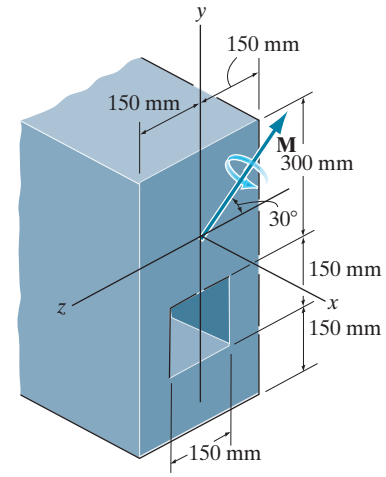

Internal Moment Components: The y component of M is positive since it is directed towards the positive sense of the y axis, whereas the z component of **M**, which is directed towards the negative sense of the z axis, is negative, Fig. *a*. Thus,

$$M_y = 1200 \sin 30^\circ = 600\ \text{kN}\cdot\text{m}$$

$$M_z = -1200 \cos 30^\circ = -1039.23\ \text{kN}\cdot\text{m}$$

Section Properties: The location of the centroid of the cross-section is given by

$$\bar{y} = \frac{\Sigma \bar{y} A}{\Sigma A} = \frac{0.3(0.6)(0.3) - 0.375(0.15)(0.15)}{0.6(0.3) - 0.15(0.15)} = 0.2893\ \text{m}$$

The moments of inertia of the cross section about the principal centroidal y and z axes are

$$I_y = \frac{1}{12}(0.6)\left(0.3^3\right) - \frac{1}{12}(0.15)\left(0.15^3\right) = 1.3078\left(10^{-3}\right)\ \text{m}^4$$

$$I_z = \frac{1}{12}(0.3)\left(0.6^3\right) + 0.3(0.6)(0.3 - 0.2893)^2$$

$$- \left[\frac{1}{12}(0.15)\left(0.15^3\right) + 0.15(0.15)(0.375 - 0.2893)^2\right]$$

$$= 5.2132\left(10^{-3}\right)\text{m}^4$$

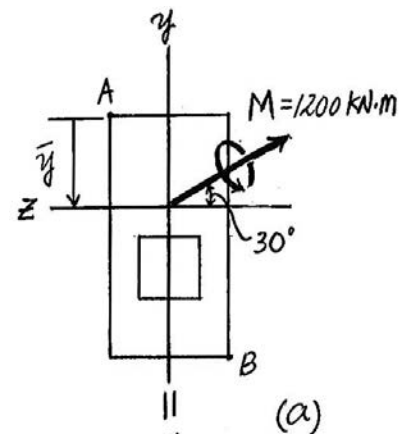

Bending Stress: By inspection, the maximum bending stress occurs at either corner A or B.

$$\sigma = -\frac{M_z y}{I_z} + \frac{M_y z}{I_y}$$

$$\sigma_A = -\frac{\left[-1039.23\left(10^3\right)\right](0.2893)}{5.2132\left(10^{-3}\right)} + \frac{600\left(10^3\right)(0.15)}{1.3078\left(10^{-3}\right)}$$

$$= 126\ \text{MPa (T)}$$

$$\sigma_B = -\frac{\left[-1039.23\left(10^3\right)\right](-0.3107)}{5.2132\left(10^{-3}\right)} + \frac{600\left(10^3\right)(-0.15)}{1.3078\left(10^{-3}\right)}$$

$$= -131\ \text{MPa} = 131\ \text{MPa (C)(Max.)} \qquad \textbf{Ans.}$$

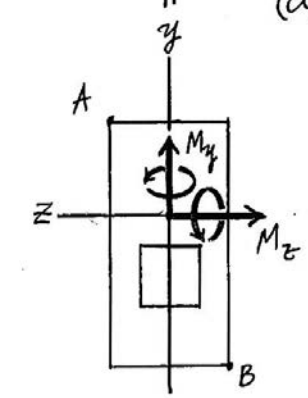

Orientation of Neutral Axis: Here, $\theta = -30^\circ$.

$$\tan\alpha = \frac{I_z}{I_y}\tan\theta$$

$$\tan\alpha = \frac{5.2132\left(10^{-3}\right)}{1.3078\left(10^{-3}\right)}\tan(-30^\circ)$$

$$\alpha = -66.5^\circ \qquad \textbf{Ans.}$$

The orientation of the neutral axis is shown in Fig. *b*.

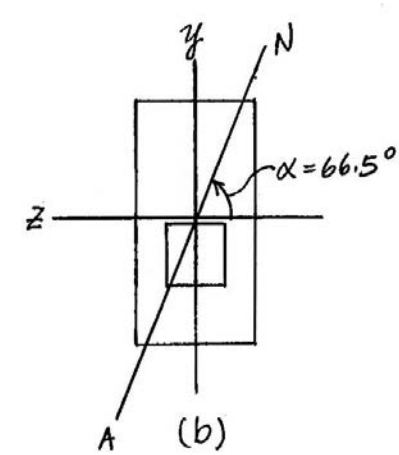

Ans:

$\sigma_{\max} = 131\ \text{MPa (C)},\ \alpha = -66.5^\circ$

***6–112.** If the beam is made from a material having an allowable tensile and compressive stress of $(\sigma_{\text{allow}})_t = 125$ MPa and $(\sigma_{\text{allow}})_c = 150$ MPa, respectively, determine the maximum allowable internal moment **M** that can be applied to the beam.

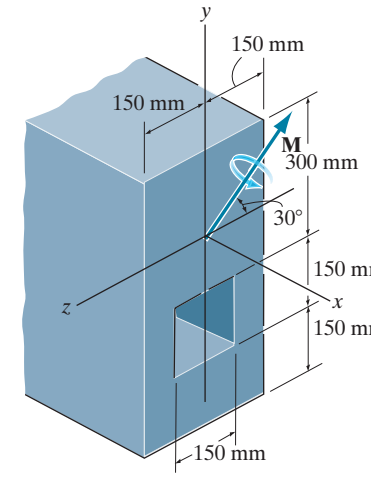

Internal Moment Components: The y component of **M** is positive since it is directed towards the positive sense of the y axis, whereas the z component of **M**, which is directed towards the negative sense of the z axis, is negative, Fig. *a*. Thus,

$$M_y = M \sin 30^\circ = 0.5M$$

$$M_z = -M \cos 30^\circ = -0.8660M$$

Section Properties: The location of the centroid of the cross section is

$$\bar{y} = \frac{\Sigma \bar{y} A}{\Sigma A} = \frac{0.3(0.6)(0.3) - 0.375(0.15)(0.15)}{0.6(0.3) - 0.15(0.15)} = 0.2893 \text{ m}$$

The moments of inertia of the cross section about the principal centroidal y and z axes are

$$I_y = \frac{1}{12}(0.6)\left(0.3^3\right) - \frac{1}{12}(0.15)\left(0.15^3\right) = 1.3078\left(10^{-3}\right) \text{ m}^4$$

$$I_z = \frac{1}{12}(0.3)\left(0.6^3\right) + 0.3(0.6)(0.3 - 0.2893)^2$$

$$- \left[\frac{1}{12}(0.15)\left(0.15^3\right) + 0.15(0.15)(0.375 - 0.2893)^2\right]$$

$$= 5.2132\left(10^{-3}\right)\text{m}^4$$

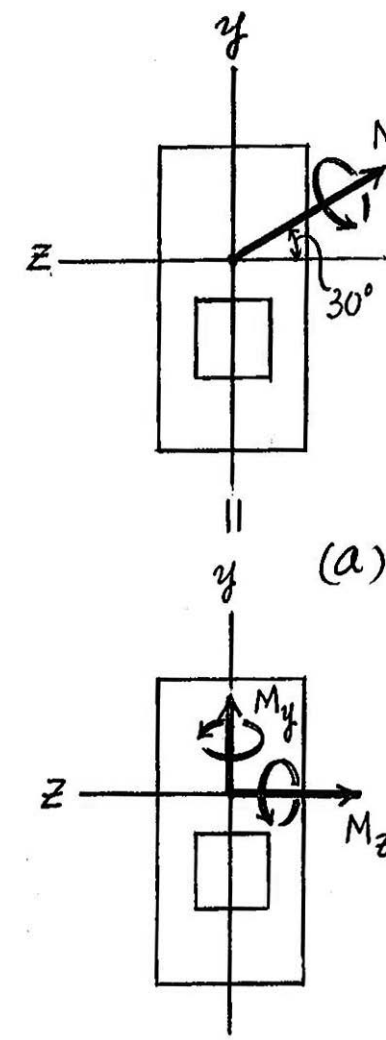

Bending Stress: By inspection, the maximum bending stress can occur at either corner A or B. For corner A which is in tension,

$$\sigma_A = (\sigma_{\text{allow}})_t = -\frac{M_z y_A}{I_z} + \frac{M_y z_A}{I_y}$$

$$125\left(10^6\right) = -\frac{(-0.8660M)(0.2893)}{5.2132\left(10^{-3}\right)} + \frac{0.5M(0.15)}{1.3078\left(10^{-3}\right)}$$

$$M = 1185\,906.82 \text{ N}\cdot\text{m} = 1186 \text{ kN}\cdot\text{m (controls)}$$ **Ans.**

For corner B which is in compression,

$$\sigma_B = (\sigma_{\text{allow}})_c = -\frac{M_z y_B}{I_z} + \frac{M_y z_B}{I_y}$$

$$-150\left(10^6\right) = -\frac{(-0.8660M)(-0.3107)}{5.2132\left(10^{-3}\right)} + \frac{0.5M(-0.15)}{1.3078\left(10^{-3}\right)}$$

$$M = 1376\,597.12 \text{ N}\cdot\text{m} = 1377 \text{ kN}\cdot\text{m}$$

6–113. The board is used as a simply supported floor joist. If a bending moment of $M = 800$ lb · ft is applied 3° from the z axis, determine the stress developed in the board at the corner A. Compare this stress with that developed by the same moment applied along the z axis ($\theta = 0°$). What is the angle α for the neutral axis when $\theta = 3°$? *Comment:* Normally, floor boards would be nailed to the top of the beams so that $\theta \approx 0°$ and the high stress due to misalignment would not occur.

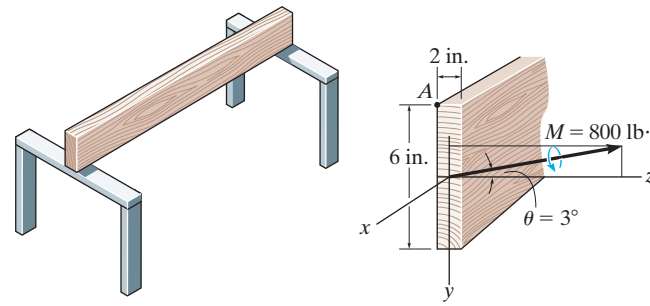

$M_z = 800 \cos 3° = 798.904$ lb · ft

$M_y = -800 \sin 3° = -41.869$ lb · ft

$I_z = \frac{1}{12}(2)(6^3) = 36 \text{ in}^4; \quad I_y = \frac{1}{12}(6)(2^3) = 4 \text{ in}^4$

$$\sigma = -\frac{M_z y}{I_z} + \frac{M_y z}{I_y}$$

$$\sigma_A = -\frac{798.904(12)(-3)}{36} + \frac{-41.869(12)(-1)}{4} = 925 \text{ psi}$$ **Ans.**

$$\tan \alpha = \frac{I_z}{I_y} \tan \theta; \qquad \tan \alpha = \frac{36}{4} \tan(-3°)$$

$\alpha = -25.3°$ **Ans.**

When $\theta = 0°$

$$\sigma_A = \frac{Mc}{I} = \frac{800(12)(3)}{36} = 800 \text{ psi}$$ **Ans.**

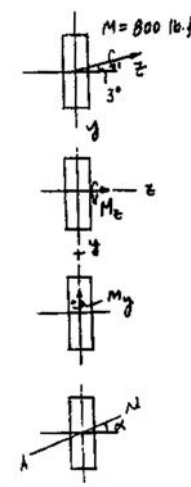

Ans:
When $\theta = 3°$: $\sigma_A = 925$ psi, $\alpha = -25.3°$,
When $\theta = 0°$: $\sigma_A = 800$ psi

6–114. The T-beam is subjected to a bending moment of $M = 150$ kip · in. directed as shown. Determine the maximum bending stress in the beam and the orientation of the neutral axis. The location $\bar{y}$ of the centroid, C, must be determined.

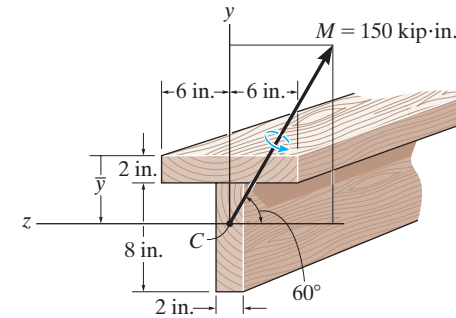

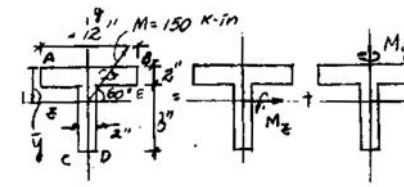

$$M_y = 150 \sin 60° = 129.9 \text{ kip} \cdot \text{in.}$$

$$M_z = -150 \cos 60° = -75 \text{ kip} \cdot \text{in.}$$

$$\bar{y} = \frac{(1)(12)(2) + (6)(8)(2)}{12(2) + 8(2)} = 3 \text{ in.}$$

$$I_y = \frac{1}{12}(2)(12^3) + \frac{1}{12}(8)(2^3) = 293.33 \text{ in}^4$$

$$I_z = \frac{1}{12}(12)(2^3) + 12(2)(2^2) + \frac{1}{12}(2)(8^3) + 2(8)(3^2) = 333.33 \text{ in}^4$$

$$\sigma = -\frac{M_z y}{I_z} + \frac{M_y z}{I_y}$$

$$\sigma_A = \frac{-(-75)(3)}{333.33} + \frac{129.9(6)}{293.33} = 3.33 \text{ ksi}$$ **Ans.**

$$\sigma_D = \frac{-(-75)(-7)}{333.33} + \frac{129.9(-1)}{293.33} = -2.02 \text{ ksi}$$

$$\sigma_B = \frac{-(-75)(3)}{333.33} + \frac{129.9(-6)}{293.33} = -1.982 \text{ ksi}$$

$$\tan \alpha = \frac{I_z}{I_y} \tan \theta = \frac{333.33}{293.33} \tan(-60°)$$

$$\alpha = -63.1°$$ **Ans.**

Ans:
$\sigma_{max} = 3.33$ ksi (T), $\alpha = -63.1°$

6–115. The beam has a rectangular cross section. If it is subjected to a bending moment of $M = 3500\ \text{N}\cdot\text{m}$ directed as shown, determine the maximum bending stress in the beam and the orientation of the neutral axis.

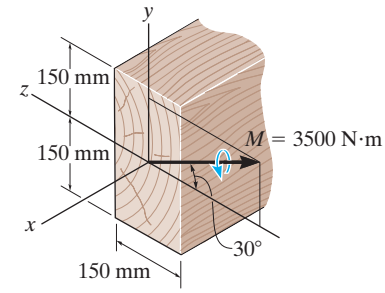

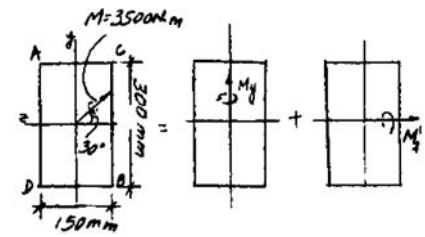

$$M_y = 3500 \sin 30° = 1750\ \text{N}\cdot\text{m}$$

$$M_z = -3500 \cos 30° = -3031.09\ \text{N}\cdot\text{m}$$

$$I_y = \frac{1}{12}(0.3)(0.15^3) = 84.375(10^{-6})\ \text{m}^4$$

$$I_z = \frac{1}{12}(0.15)(0.3^3) = 0.3375(10^{-3})\ \text{m}^4$$

$$\sigma = -\frac{M_z y}{I_z} + \frac{M_y z}{I_y}$$

$$\sigma_A = -\frac{-3031.09(0.15)}{0.3375(10^{-3})} + \frac{1750(0.075)}{84.375(10^{-6})} = 2.90\ \text{MPa (max)}$$ **Ans.**

$$\sigma_B = -\frac{-3031.09(-0.15)}{0.3375(10^{-3})} + \frac{1750(-0.075)}{84.375(10^{-6})} = -2.90\ \text{MPa (max)}$$ **Ans.**

$$\sigma_C = -\frac{-3031.09(0.15)}{0.3375(10^{-3})} + \frac{1750(-0.075)}{84.375(10^{-6})} = -0.2084\ \text{MPa}$$

$$\sigma_D = 0.2084\ \text{MPa}$$

$$\tan \alpha^4 = \frac{I_z}{I_y} \tan \theta = \frac{3.375\ (10^{-4})}{8.4375(10^{-5})} \tan(-30°)$$

$$\alpha = -66.6°$$ **Ans.**

Ans:
$\sigma_{\max} = 2.90\ \text{MPa},\ \alpha = -66.6°$

***6–116.** For the section, $I_{y'} = 31.7(10^{-6})\ \text{m}^4$, $I_{z'} = 114(10^{-6})\ \text{m}^4$, $I_{y'z'} = 15.1(10^{-6})\ \text{m}^4$. Using the techniques outlined in Appendix A, the member's cross-sectional area has principal moments of inertia of $I_y = 29.0(10^{-6})\ \text{m}^4$ and $I_z = 117(10^{-6})\ \text{m}^4$, computed about the principal axes of inertia y and z, respectively. If the section is subjected to a moment of $M = 2500\ \text{N}\cdot\text{m}$ directed as shown, determine the stress produced at point A, using Eq. 6–17.

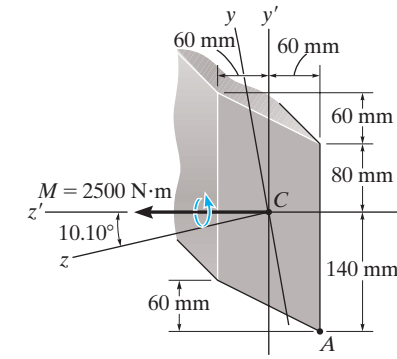

$I_z = 117(10^{-6})\ \text{m}^4 \qquad I_y = 29.0(10^{-6})\ \text{m}^4$

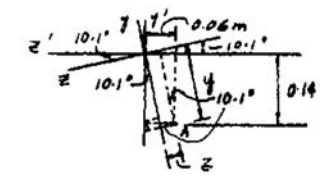

$M_y = 2500 \sin 10.1° = 438.42\ \text{N}\cdot\text{m}$

$M_z = 2500 \cos 10.1° = 2461.26\ \text{N}\cdot\text{m}$

$y = -0.06 \sin 10.1° - 0.14 \cos 10.1° = -0.14835\ \text{m}$

$z = 0.14 \sin 10.1° - 0.06 \cos 10.1° = -0.034519\ \text{m}$

$$\sigma_A = \frac{-M_z y}{I_z} + \frac{M_y z}{I_y}$$

$$= \frac{-2461.26(-0.14835)}{117(10^{-6})} + \frac{438.42(-0.034519)}{29.0(10^{-6})} = 2.60\ \text{MPa (T)} \qquad \textbf{Ans.}$$

6–117. Solve Prob. 6–116 using the equation developed in Prob. 6–106.

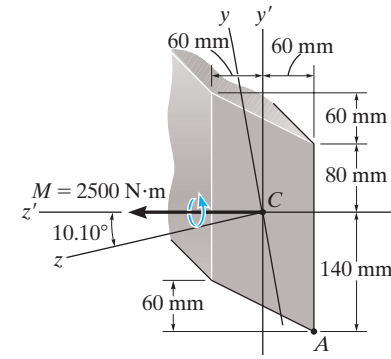

$$\sigma_A = \frac{-(M_{z'}I_{y'} + M_{y'}I_{y'z'})y' + (M_{y'}I_{z'} + M_{z'}I_{y'z'})z'}{I_{y'}I_{z'} - I_{y'z'}{}^2}$$

$$= \frac{-[2500(31.7)(10^{-6}) + 0](-0.14) + [0 + 2500(15.1)(10^{-6})](-0.06)}{31.7(10^{-6})(114)(10^{-6}) - [(15.1)(10^{-6})]^2} = 2.60 \text{ MPa (T)} \qquad \textbf{Ans.}$$

Ans:
$\sigma_A = 2.60$ MPa

6–118. If the applied distributed loading of $w = 4$ kN/m can be assumed to pass through the centroid of the beam's cross sectional area, determine the absolute maximum bending stress in the joist and the orientation of the neutral axis. The beam can be considered simply supported at A and B.

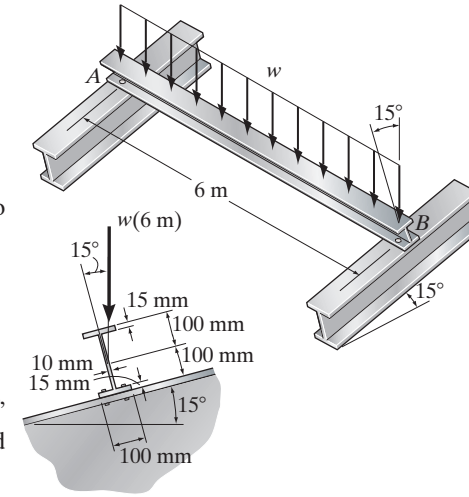

Internal Moment Components: The uniform distributed load **w** can be resolved into its y and z components as shown in Fig. a.

$$w_y = 4\cos 15° = 3.864 \text{ kN/m}$$

$$w_z = 4\sin 15° = 1.035 \text{ kN/m}$$

$\mathbf{w}_y$ and $\mathbf{w}_z$ produce internal moments in the beam about the z and y axes, respectively. For the simply supported beam subjected to the uniform distributed load, the maximum moment in the beam is $M_{\max} = \dfrac{wL^2}{8}$. Thus,

$$(M_z)_{\max} = \frac{w_y L^2}{8} = \frac{3.864(6^2)}{8} = 17.387 \text{ kN}\cdot\text{m}$$

$$(M_y)_{\max} = \frac{w_z L^2}{8} = \frac{1.035(6^2)}{8} = 4.659 \text{ kN}\cdot\text{m}$$

As shown in Fig. b, $(\mathbf{M}_z)_{\max}$ and $(\mathbf{M}_y)_{\max}$ are positive since they are directed towards the positive sense of their respective axes.

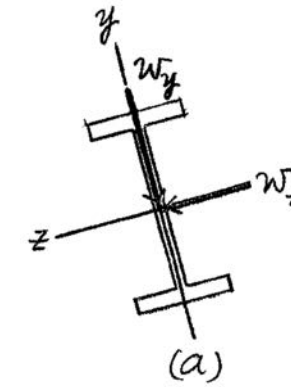

Section Properties: The moment of inertia of the cross section about the principal centroidal y and z axes are

$$I_y = 2\left[\frac{1}{12}(0.015)(0.1^3)\right] + \frac{1}{12}(0.17)(0.01^3) = 2.5142(10^{-6}) \text{ m}^4$$

$$I_z = \frac{1}{12}(0.1)(0.2^3) - \frac{1}{12}(0.09)(0.17^3) = 29.8192(10^{-6}) \text{ m}^4$$

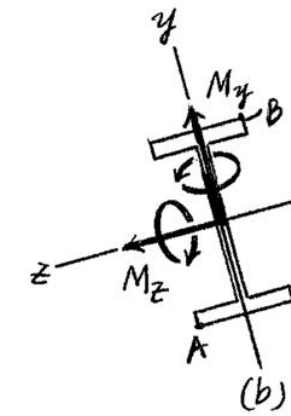

Bending Stress: By inspection, the maximum bending stress occurs at points A and B.

$$\sigma = -\frac{(M_z)_{\max} y}{I_z} + \frac{(M_y)_{\max} z}{I_y}$$

$$\sigma_{\max} = \sigma_A = -\frac{17.387(10^3)(-0.1)}{29.8192\,(10^{-6})} + \frac{4.659(10^3)(0.05)}{2.5142(10^{-6})}$$

$$= 150.96 \text{ MPa} = 151 \text{ MPa (T)} \qquad \textbf{Ans.}$$

$$\sigma_{\max} = \sigma_B = -\frac{17.387(10^3)(0.1)}{29.8192\,(10^{-6})} + \frac{4.659(10^3)(-0.05)}{2.5142(10^{-6})}$$

$$= -150.96 \text{ MPa} = 151 \text{ MPa (C)} \qquad \textbf{Ans.}$$

Orientation of Neutral Axis: Here, $\theta = \tan^{-1}\left[\dfrac{(M_y)_{\max}}{(M_z)_{\max}}\right] = \tan^{-1}\left(\dfrac{4.659}{17.387}\right) = 15°$.

$$\tan\alpha = \frac{I_z}{I_y}\tan\theta$$

$$\tan\alpha = \frac{29.8192(10^{-6})}{2.5142(10^{-6})}\tan 15°$$

$$\alpha = 72.5° \qquad \textbf{Ans.}$$

The orientation of the neutral axis is shown in Fig. c.

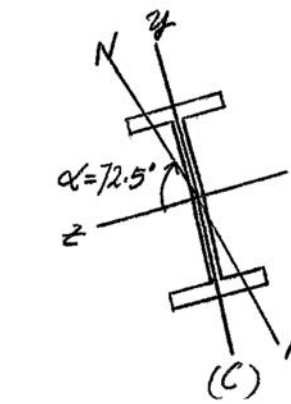

Ans:
$\sigma_{\max} = 151$ MPa, $\alpha = 72.5°$

6–119. Determine the maximum allowable intensity w of the uniform distributed load that can be applied to the beam. Assume w passes through the centroid of the beam's cross sectional area and the beam is simply supported at A and B. The beam is made of material having an allowable bending stress of $\sigma_{\text{allow}} = 165$ MPa.

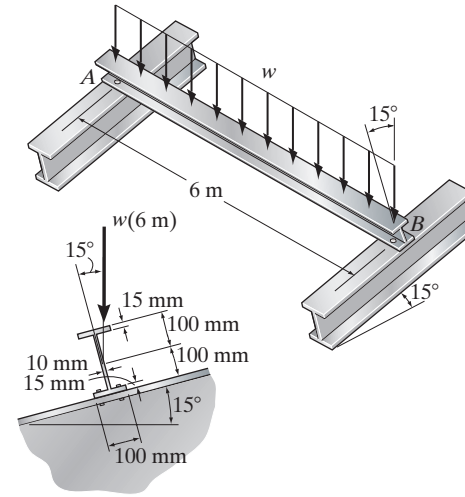

Internal Moment Components: The uniform distributed load **w** can be resolved into its y and z components as shown in Fig. a.

$$w_y = w\cos 15° = 0.9659w$$

$$w_z = w\sin 15° = 0.2588w$$

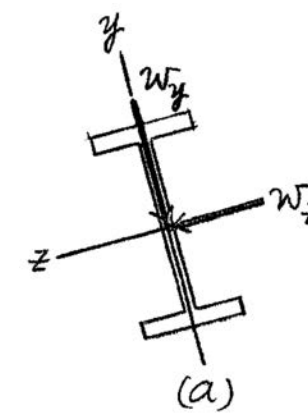

$\mathbf{w}_y$ and $\mathbf{w}_z$ produce internal moments in the beam about the z and y axes, respectively. For the simply supported beam subjected to the a uniform distributed load, the maximum moment in the beam is $M_{\max} = \dfrac{wL^2}{8}$. Thus,

$$(M_z)_{\max} = \frac{w_y L^2}{8} = \frac{0.9659w(6^2)}{8} = 4.3476w$$

$$(M_y)_{\max} = \frac{w_z L^2}{8} = \frac{0.2588w(6^2)}{8} = 1.1647w$$

As shown in Fig. b, $(\mathbf{M}_z)_{\max}$ and $(\mathbf{M}_y)_{\max}$ are positive since they are directed towards the positive sense of their respective axes.

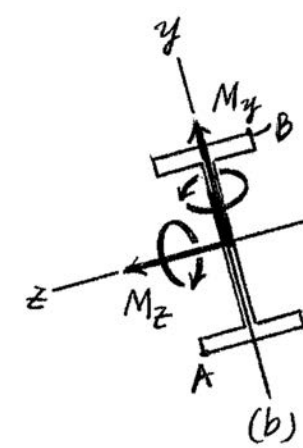

Section Properties: The moment of inertia of the cross section about the principal centroidal y and z axes are

$$I_y = 2\left[\frac{1}{12}(0.015)(0.1^3)\right] + \frac{1}{12}(0.17)(0.01^3) = 2.5142(10^{-6})\ \text{m}^4$$

$$I_z = \frac{1}{12}(0.1)(0.2^3) - \frac{1}{12}(0.09)(0.17^3) = 29.8192(10^{-6})\ \text{m}^4$$

Bending Stress: By inspection, the maximum bending stress occurs at points A and B. We will consider point A.

$$\sigma_A = \sigma_{\text{allow}} = -\frac{(M_z)_{\max} y_A}{I_z} + \frac{(M_y)_{\max} z_A}{I_y}$$

$$165(10^6) = -\frac{4.3467w(-0.1)}{29.8192(10^{-6})} + \frac{1.1647w(0.05)}{2.5142(10^{-6})}$$

$$w = 4372.11\ \text{N/m} = 4.37\ \text{kN/m}$$ **Ans.**

Ans:
$w = 4.37$ kN/m

***6–120.** The composite beam is made of steel (A) bonded to brass (B) and has the cross section shown. If it is subjected to a moment of $M = 6.5\ \text{kN}\cdot\text{m}$, determine the maximum bending stress in the brass and steel. Also, what is the stress in each material at the seam where they are bonded together? $E_{br} = 100$ GPa. $E_{st} = 200$ GPa.

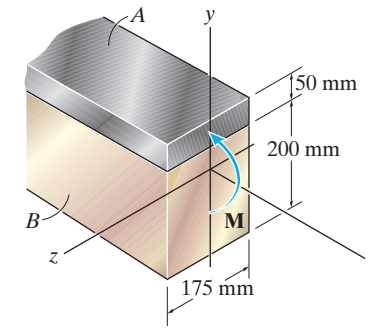

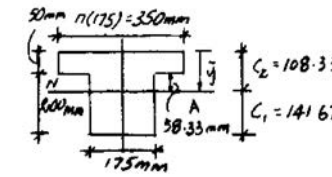

$$n = \frac{E_{st}}{E_{br}} = \frac{200(10^9)}{100(10^9)} = 2$$

$$\bar{y} = \frac{(350)(50)(25) + (175)(200)(150)}{350(50) + 175(200)} = 108.33\,\text{mm}$$

$$I = \frac{1}{12}(0.35)(0.05^3) + (0.35)(0.05)(0.08333^2) + \frac{1}{12}(0.175)(0.2^3) +$$

$$(0.175)(0.2)(0.04167^2) = 0.3026042(10^{-3})\ \text{m}^4$$

Maximum stress in brass:

$$(\sigma_{br})_{max} = \frac{Mc_1}{I} = \frac{6.5(10^3)(0.14167)}{0.3026042(10^{-3})} = 3.04\ \text{MPa} \qquad \textbf{Ans.}$$

Maximum stress in steel:

$$(\sigma_{st})_{max} = \frac{nMc_2}{I} = \frac{(2)(6.5)(10^3)(0.10833)}{0.3026042(10^{-3})} = 4.65\ \text{MPa} \qquad \textbf{Ans.}$$

Stress at the junction:

$$\sigma_{br} = \frac{M\rho}{I} = \frac{6.5(10^3)(0.05833)}{0.3026042(10^{-3})} = 1.25\ \text{MPa} \qquad \textbf{Ans.}$$

$$\sigma_{st} = n\sigma_{br} = 2(1.25) = 2.51\ \text{MPa} \qquad \textbf{Ans.}$$

6–121. The composite beam is made of steel (A) bonded to brass (B) and has the cross section shown. If the allowable bending stress for the steel is $(\sigma_{\text{allow}})_{\text{st}} = 180$ MPa, and for the brass $(\sigma_{\text{allow}})_{\text{br}} = 60$ MPa, determine the maximum moment M that can be applied to the beam. $E_{\text{br}} = 100$ GPa, $E_{\text{st}} = 200$ GPa.

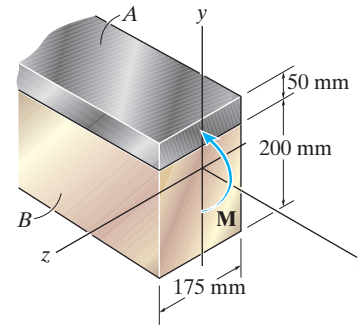

$$n = \frac{E_{\text{st}}}{E_{\text{br}}} = \frac{200(10^9)}{100(10^9)} = 2$$

$$\bar{y} = \frac{(350)(50)(25) + (175)(200)(150)}{350(50) + 175(200)} = 108.33 \text{ mm}$$

$$I = \frac{1}{12}(0.35)(0.05^3) + (0.35)(0.05)(0.08333^2) + \frac{1}{12}(0.175)(0.2^3) +$$

$$(0.175)(0.2)(0.04167^2) = 0.3026042(10^{-3}) \text{ m}^4$$

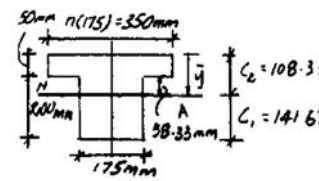

$$(\sigma_{\text{st}})_{\text{allow}} = \frac{nMc_2}{I}; \qquad 180(10^6) = \frac{(2)\,M(0.10833)}{0.3026042(10^{-3})}$$

$$M = 251 \text{ kN}\cdot\text{m}$$

$$(\sigma_{\text{br}})_{\text{allow}} = \frac{Mc_1}{I}; \qquad 60(10^6) = \frac{M(0.14167)}{0.3026042(10^{-3})}$$

$$M = 128 \text{ kN}\cdot\text{m} \text{ (controls)}$$ **Ans.**

Ans:
$M = 128$ kN · m

6–122. Segment A of the composite beam is made from 2014-T6 aluminum alloy and segment B is A-36 steel. If $w = 0.9$ kip/ft, determine the absolute maximum bending stress developed in the aluminum and steel. Sketch the stress distribution on the cross section.

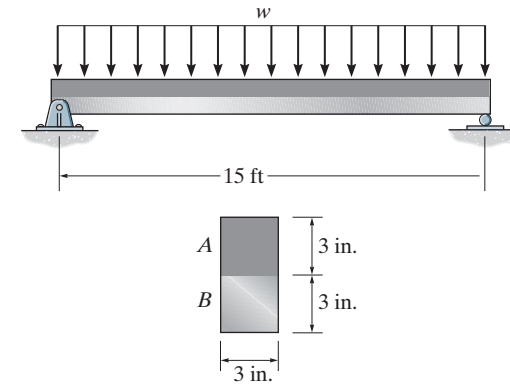

Maximum Moment: For the simply supported beam subjected to the uniform distributed load, the maximum moment in the beam is $M_{\max} = \dfrac{wL^2}{8} = \dfrac{0.9(15^2)}{8}$ $= 25.3125$ kip · ft.

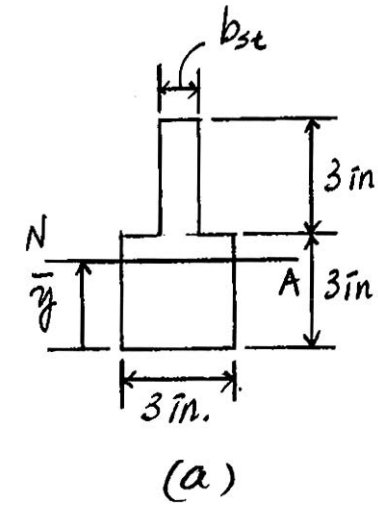

Section Properties: The cross section will be transformed into that of steel as shown in Fig. *a*. Here, $n = \dfrac{E_{al}}{E_{st}} = \dfrac{10.6}{29} = 0.3655$.

Then $b_{st} = nb_{al} = 0.3655(3) = 1.0965$ in. The location of the centroid of the transformed section is

$$\bar{y} = \frac{\Sigma \bar{y} A}{\Sigma A} = \frac{1.5(3)(3) + 4.5(3)(1.0965)}{3(3) + 3(1.0965)} = 2.3030 \text{ in.}$$

The moment of inertia of the transformed section about the neutral axis is

$$I = \Sigma \bar{I} + Ad^2 = \frac{1}{12}(3)(3^3) + 3(3)(2.3030 - 1.5)^2$$

$$+ \frac{1}{12}(1.0965)(3^3) + 1.0965(3)(4.5 - 2.3030)^2$$

$$= 30.8991 \text{ in}^4$$

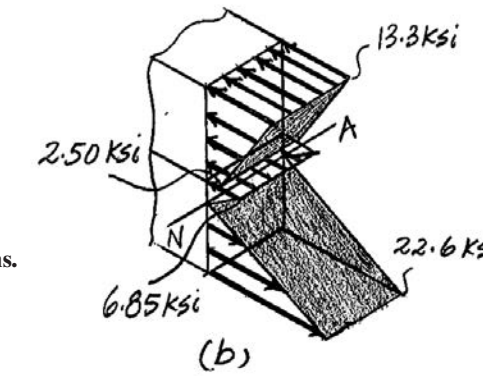

Maximum Bending Stress: For the steel,

$$(\sigma_{\max})_{st} = \frac{M_{\max} c_{st}}{I} = \frac{25.3125(12)(2.3030)}{30.8991} = 22.6 \text{ ksi} \qquad \textbf{Ans.}$$

At the seam,

$$\sigma_{st}\Big|_{y=0.6970 \text{ in.}} = \frac{M_{\max} y}{I} = \frac{25.3125(12)(0.6970)}{30.8991} = 6.85 \text{ ksi}$$

For the aluminum,

$$(\sigma_{\max})_{al} = n\frac{M_{\max} c_{al}}{I} = 0.3655\left[\frac{25.3125(12)(6 - 2.3030)}{30.8991}\right] = 13.3 \text{ ksi} \qquad \textbf{Ans.}$$

At the seam,

$$\sigma_{al}\Big|_{y=0.6970 \text{ in.}} = n\frac{M_{\max} y}{I} = 0.3655\left[\frac{25.3125(12)(0.6970)}{30.8991}\right] = 2.50 \text{ ksi}$$

The bending stress across the cross section of the composite beam is shown in Fig. *b*.

Ans:
$(\sigma_{\max})_{st} = 22.6$ ksi, $(\sigma_{\max})_{al} = 13.3$ ksi

6–123. Segment A of the composite beam is made from 2014-T6 aluminum alloy and segment B is A-36 steel. The allowable bending stress for the aluminum and steel are $(\sigma_{\text{allow}})_{\text{al}} = 15$ ksi and $(\sigma_{\text{allow}})_{\text{st}} = 22$ ksi. Determine the maximum allowable intensity w of the uniform distributed load.

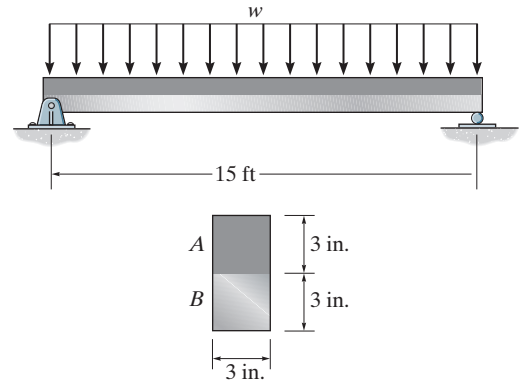

Maximum Moment: For the simply supported beam subjected to the uniform distributed load, the maximum moment in the beam is

$$M_{\max} = \frac{wL^2}{8} = \frac{w\left(15^2\right)}{8} = 28.125w.$$

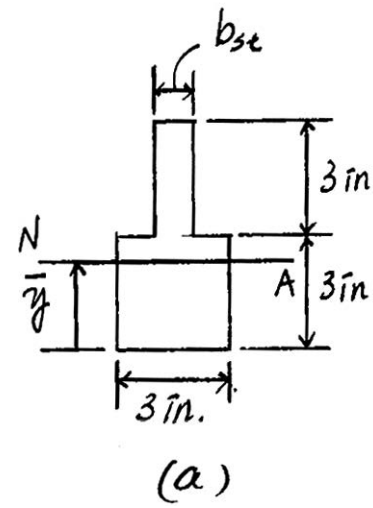

Section Properties: The cross section will be transformed into that of steel as shown in Fig. a. Here, $n = \dfrac{E_{al}}{E_{st}} = \dfrac{10.6}{29} = 0.3655$.

Then $b_{st} = nb_{al} = 0.3655(3) = 1.0965$ in. The location of the centroid of the transformed section is

$$\bar{y} = \frac{\Sigma \bar{y}A}{\Sigma A} = \frac{1.5(3)(3) + 4.5(3)(1.0965)}{3(3) + 3(1.0965)} = 2.3030 \text{ in.}$$

The moment of inertia of the transformed section about the neutral axis is

$$I = \Sigma \bar{I} + Ad^2 = \frac{1}{12}(3)\left(3^3\right) + 3(3)(2.3030 - 1.5)^2 + \frac{1}{12}(1.0965)\left(3^3\right)$$

$$+ 1.0965\left(3^3\right) + 1.0965(3)(4.5 - 2.3030)^2$$

$$= 30.8991 \text{ in}^4$$

Bending Stress: Assuming failure of steel,

$$(\sigma_{\text{allow}})_{\text{st}} = \frac{M_{\max}\, c_{\text{st}}}{I}; \qquad 22 = \frac{(28.125w)(12)(2.3030)}{30.8991}$$

$$w = 0.875 \text{ kip/ft (controls)} \qquad \textbf{Ans.}$$

Assuming failure of aluminium alloy,

$$(\sigma_{\text{allow}})_{\text{al}} = n\frac{M_{\max}\, c_{\text{al}}}{I}; \qquad 15 = 0.3655\left[\frac{(28.125w)(12)(6 - 2.3030)}{30.8991}\right]$$

$$w = 1.02 \text{ kip/ft}$$

Ans:
$w = 0.875$ kip/ft

***6–124.** Using the techniques outlined in Appendix A, Example A.5 or A.6, the Z section has principal moments of inertia of $I_y = 0.060(10^{-3})\ \text{m}^4$ and $I_z = 0.471(10^{-3})\ \text{m}^4$, computed about the principal axes of inertia y and z, respectively. If the section is subjected to an internal moment of $M = 250\ \text{N}\cdot\text{m}$ directed horizontally as shown, determine the stress produced at point B. Solve the problem using Eq. 6–17.

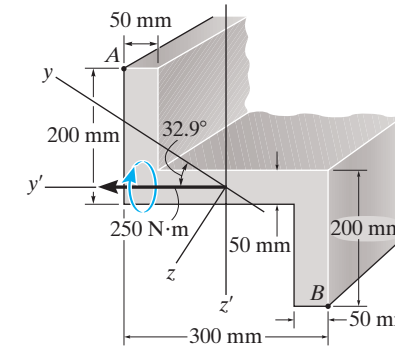

Internal Moment Components:

$$M_{y'} = 250 \cos 32.9° = 209.9\ \text{N}\cdot\text{m}$$

$$M_{z'} = 250 \sin 32.9° = 135.8\ \text{N}\cdot\text{m}$$

Section Property:

$$y' = 0.15 \cos 32.9° + 0.175 \sin 32.9° = 0.2210\ \text{m}$$

$$z' = 0.15 \sin 32.9° - 0.175 \cos 32.9° = -0.06546\ \text{m}$$

Bending Stress: Applying the flexure formula for biaxial bending

$$\sigma = \frac{M_{z'}y'}{I_{z'}} + \frac{M_{y'}z'}{I_{y'}}$$

$$\sigma_B = \frac{135.8(0.2210)}{0.471(10^{-3})} - \frac{209.9(-0.06546)}{0.060(10^{-3})}$$

$$= 293\ \text{kPa} = 293\ \text{kPa (T)}$$ **Ans.**

6–125. The wooden section of the beam is reinforced with two steel plates as shown. Determine the maximum internal moment M that the beam can support if the allowable stresses for the wood and steel are $(\sigma_{\text{allow}})_{\text{w}} = 6$ MPa, and $(\sigma_{\text{allow}})_{\text{st}} = 150$ MPa, respectively. Take $E_{\text{w}} = 10$ GPa and $E_{\text{st}} = 200$ GPa.

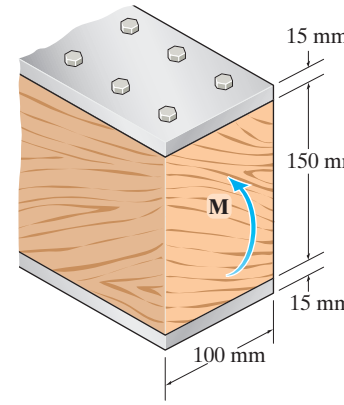

Section Properties: The cross section will be transformed into that of steel as shown in Fig. *a*. Here, $n = \dfrac{E_{\text{w}}}{E_{\text{st}}} = \dfrac{10}{200} = 0.05$. Thus, $b_{\text{st}} = nb_{\text{w}} = 0.05(0.1) = 0.005\text{ m}$. The moment of inertia of the transformed section about the neutral axis is

$$I = \frac{1}{12}(0.1)(0.18^3) - \frac{1}{12}(0.095)(0.15^3) = 21.88125(10^{-6})\text{ m}^4$$

Bending Stress: Assuming failure of the steel,

$$(\sigma_{\text{allow}})_{\text{st}} = \frac{Mc_{\text{st}}}{I}; \qquad 150(10^6) = \frac{M(0.09)}{21.88125(10^{-6})}$$

$$M = 36\,468.75\text{ N}\cdot\text{m} = 36.5\text{ kN}\cdot\text{m}$$

Assuming failure of wood,

$$(\sigma_{\text{allow}})_{\text{w}} = n\frac{Mc_{\text{w}}}{I}; \qquad 6(10^6) = 0.05\left[\frac{M(0.075)}{21.88125(10^{-6})}\right]$$

$$M = 35\,010\text{ N}\cdot\text{m} = 35.0\text{ kN}\cdot\text{m} \text{ (controls)} \qquad \textbf{Ans.}$$

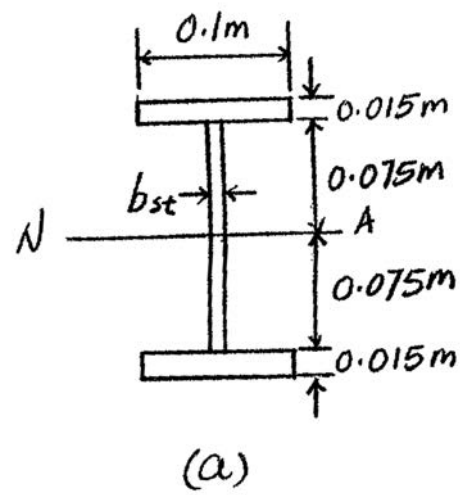

Ans:
$M = 35.0\text{ kN}\cdot\text{m}$

6–126. The wooden section of the beam is reinforced with two steel plates as shown. If the beam is subjected to an internal moment of $M = 30\ \text{kN}\cdot\text{m}$, determine the maximum bending stresses developed in the steel and wood. Sketch the stress distribution over the cross section. Take $E_w = 10$ GPa and $E_{st} = 200$ GPa.

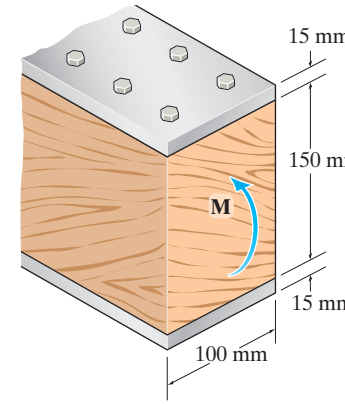

Section Properties: The cross section will be transformed into that of steel as shown in Fig. *a*. Here, $n = \dfrac{E_w}{E_{st}} = \dfrac{10}{200} = 0.05$. Thus, $b_{st} = nb_w = 0.05(0.1) = 0.005\,\text{m}$. The moment of inertia of the transformed section about the neutral axis is

$$I = \frac{1}{12}(0.1)(0.18^3) - \frac{1}{12}(0.095)(0.15^3) = 21.88125(10^{-6})\ \text{m}^4$$

Maximum Bending Stress: For the steel,

$$(\sigma_{max})_{st} = \frac{Mc_{st}}{I} = \frac{30(10^3)(0.09)}{21.88125(10^{-6})} = 123\ \text{MPa} \qquad \textbf{Ans.}$$

$$\sigma_{st}\big|_{y=0.075\ \text{m}} = \frac{My}{I} = \frac{30(10^3)(0.075)}{21.88125(10^{-6})} = 103\ \text{MPa}$$

For the wood,

$$(\sigma_{max})_w = n\frac{Mc_w}{I} = 0.05\left[\frac{30(10^3)(0.075)}{21.88125(10^{-6})}\right] = 5.14\ \text{MPa} \qquad \textbf{Ans.}$$

The bending stress distribution across the cross section is shown in Fig. *b*.

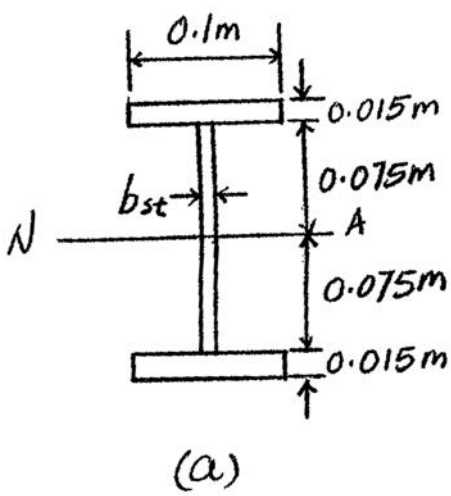

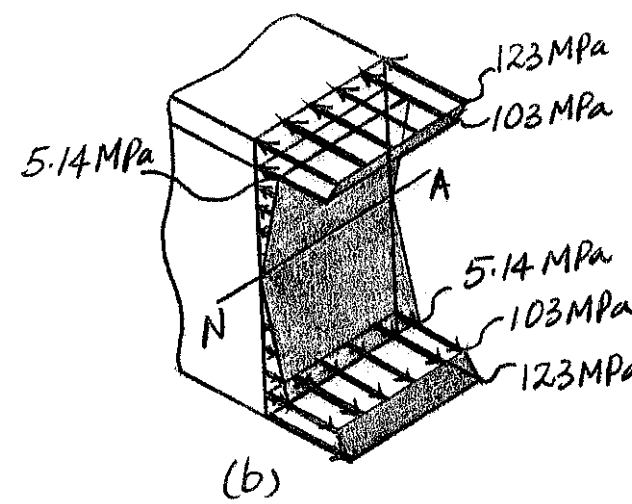

Ans:
$(\sigma_{max})_{st} = 123$ MPa, $(\sigma_{max})_w = 5.14$ MPa

6–127. The member has a brass core bonded to a steel casing. If a couple moment of 8 kN · m is applied at its end, determine the maximum bending stress in the member. $E_{br} = 100$ GPa, $E_{st} = 200$ GPa.

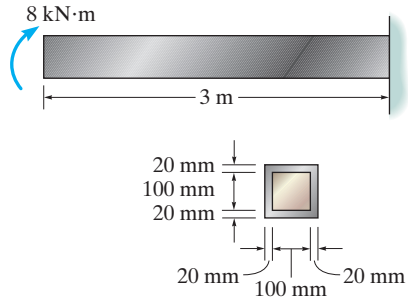

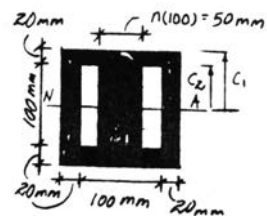

$$n = \frac{E_{br}}{E_{st}} = \frac{100}{200} = 0.5$$

$$I = \frac{1}{12}(0.14)(0.14)^3 - \frac{1}{12}(0.05)(0.1)^3 = 27.84667(10^{-6})\text{m}^4$$

Maximum stress in steel:

$$(\sigma_{st})_{max} = \frac{Mc_1}{I} = \frac{8(10^3)(0.07)}{27.84667(10^{-6})} = 20.1 \text{ MPa} \qquad \text{(max)} \qquad \textbf{Ans.}$$

Maximum stress in brass:

$$(\sigma_{br})_{max} = \frac{nMc_2}{I} = \frac{0.5(8)(10^3)(0.05)}{27.84667(10^{-6})} = 7.18 \text{ MPa}$$

Ans:
$\sigma_{max} = 20.1$ MPa

***6–128.** The steel channel is used to reinforce the wood beam. Determine the maximum stress in the steel and in the wood if the beam is subjected to a moment of $M = 850\ \text{lb}\cdot\text{ft}$. $E_{st} = 29(10^3)$ ksi, $E_w = 1600$ ksi.

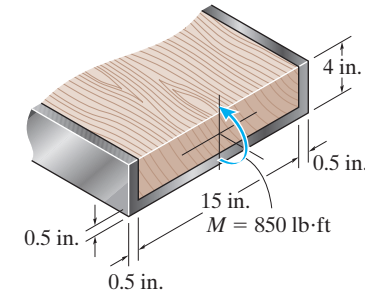

$$\bar{y} = \frac{(0.5)(16)(0.25) + 2(3.5)(0.5)(2.25) + (0.8276)(3.5)(2.25)}{0.5(16) + 2(3.5)(0.5) + (0.8276)(3.5)} = 1.1386 \text{ in.}$$

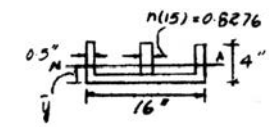

$$I = \frac{1}{12}(16)(0.5^3) + (16)(0.5)(0.8886^2) + 2\left(\frac{1}{12}\right)(0.5)(3.5^3) + 2(0.5)(3.5)(1.1114^2)$$

$$+ \frac{1}{12}(0.8276)(3.5^3) + (0.8276)(3.5)(1.1114^2) = 20.914 \text{ in}^4$$

Maximum stress in steel:

$$(\sigma_{st}) = \frac{Mc}{I} = \frac{850(12)(4 - 1.1386)}{20.914} = 1395 \text{ psi} = 1.40 \text{ ksi} \qquad \textbf{Ans.}$$

Maximum stress in wood:

$$(\sigma_w) = n(\sigma_{st})_{max}$$

$$= 0.05517(1395) = 77.0 \text{ psi} \qquad \textbf{Ans.}$$

6–129. A wood beam is reinforced with steel straps at its top and bottom as shown. Determine the maximum bending stress developed in the wood and steel if the beam is subjected to a bending moment of $M = 5\ \text{kN}\cdot\text{m}$. Sketch the stress distribution acting over the cross section. Take $E_w = 11$ GPa, $E_{st} = 200$ GPa.

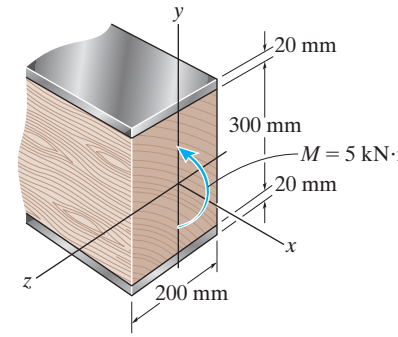

$$n = \frac{200}{11} = 18.182$$

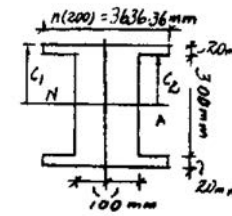

$$I = \frac{1}{12}(3.63636)(0.34)^3 - \frac{1}{12}(3.43636)(0.3)^3 = 4.17848(10^{-3})\ \text{m}^4$$

Maximum stress in steel:

$$(\sigma_{st})_{max} = \frac{nMc_1}{I} = \frac{18.182(5)(10^3)(0.17)}{4.17848(10^{-3})} = 3.70\ \text{MPa}$$ **Ans.**

Maximum stress in wood:

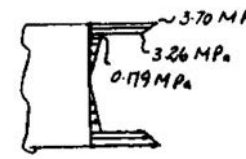

$$(\sigma_w)_{max} = \frac{Mc_2}{I} = \frac{5(10^3)(0.15)}{4.17848(10^{-3})} = 0.179\ \text{MPa}$$ **Ans.**

$$(\sigma_{st}) = n(\sigma_w)_{max} = 18.182(0.179) = 3.26\ \text{MPa}$$

Ans:
$(\sigma_{st})_{max} = 3.70$ MPa, $(\sigma_w)_{max} = 0.179$ MPa

6–130. The beam is made from three types of plastic that are identified and have the moduli of elasticity shown in the figure. Determine the maximum bending stress in the PVC.

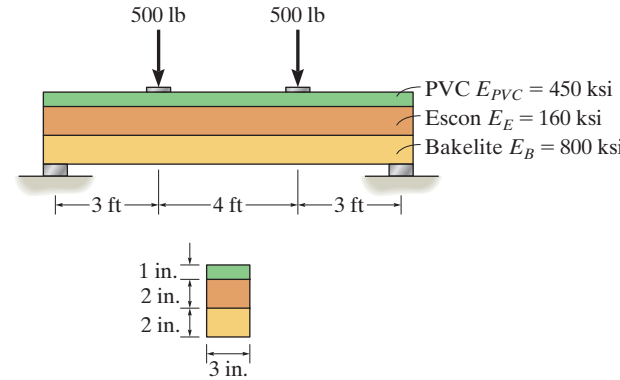

$$(b_{bk})_1 = n_1 b_{Es} = \frac{160}{800}(3) = 0.6 \text{ in.}$$

$$(b_{bk})_2 = n_2 b_{pvc} = \frac{450}{800}(3) = 1.6875 \text{ in.}$$

$$\bar{y} = \frac{\Sigma \bar{y} A}{\Sigma A} = \frac{(1)(3)(2) + 3(0.6)(2) + 4.5(1.6875)(1)}{3(2) + 0.6(2) + 1.6875(1)} = 1.9346 \text{ in.}$$

$$I = \frac{1}{12}(3)(2^3) + 3(2)(0.9346^2) + \frac{1}{12}(0.6)(2^3) + 0.6(2)(1.0654^2)$$

$$+ \frac{1}{12}(1.6875)(1^3) + 1.6875(1)(2.5654^2) = 20.2495 \text{ in}^4$$

$$(\sigma_{\max})_{pvc} = n_2 \frac{Mc}{I} = \left(\frac{450}{800}\right)\frac{1500(12)(3.0654)}{20.2495}$$

$$= 1.53 \text{ ksi}$$ **Ans.**

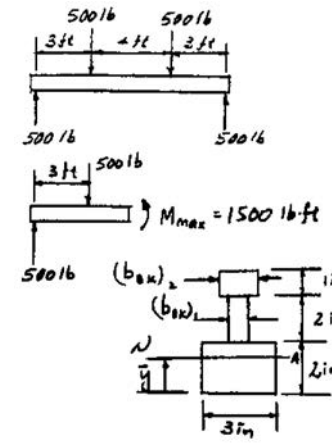

Ans:
$(\sigma_{pvc})_{\max} = 1.53$ ksi

6–131. The concrete beam is reinforced with three 20-mm-diameter steel rods. Assume that the concrete cannot support tensile stress. If the allowable compressive stress for concrete is $(\sigma_{\text{allow}})_{\text{con}} = 12.5$ MPa and the allowable tensile stress for steel is $(\sigma_{\text{allow}})_{\text{con}} = 220$ MPa, determine the required dimension d so that both the concrete and steel achieve their allowable stress simultaneously. This condition is said to be 'balanced'. Also, compute the corresponding maximum allowable internal moment **M** that can be applied to the beam. The moduli of elasticity for concrete and steel are $E_{\text{con}} = 25$ GPa and $E_{\text{st}} = 200$ GPa, respectively.

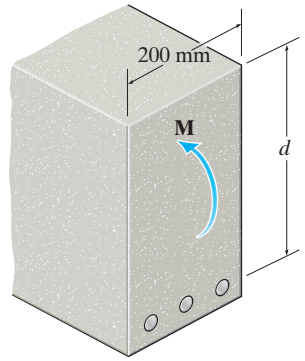

Bending Stress: The cross section will be transformed into that of concrete. Here, $n = \dfrac{E_{\text{st}}}{E_{\text{con}}} = \dfrac{200}{25} = 8$. It is required that both concrete and steel achieve their allowable stress simultaneously. Thus,

$$(\sigma_{\text{allow}})_{\text{con}} = \frac{Mc_{\text{con}}}{I}; \qquad 12.5\left(10^6\right) = \frac{Mc_{\text{con}}}{I}$$

$$M = 12.5\left(10^6\right)\left(\frac{I}{c_{\text{con}}}\right) \qquad \textbf{(1)}$$

$$(\sigma_{\text{allow}})_{\text{st}} = n\frac{Mc_{\text{st}}}{I}; \qquad 220\left(10^6\right) = 8\left[\frac{M(d - c_{\text{con}})}{I}\right]$$

$$M = 27.5\left(10^6\right)\left(\frac{I}{d - c_{\text{con}}}\right) \qquad \textbf{(2)}$$

Equating Eqs. (1) and (2),

$$12.5\left(10^6\right)\left(\frac{I}{c_{\text{con}}}\right) = 27.5\left(10^6\right)\left(\frac{I}{d - c_{\text{con}}}\right)$$

$$c_{\text{con}} = 0.3125d \qquad \textbf{(3)}$$

Section Properties: The area of the steel bars is $A_{\text{st}} = 3\left[\dfrac{\pi}{4}\left(0.02^2\right)\right] = 0.3\left(10^{-3}\right)\pi \text{ m}^2$. Thus, the transformed area of concrete from steel is $(A_{\text{con}})_t = nA_s = 8\left[0.3\left(10^{-3}\right)\pi\right] = 2.4\left(10^{-3}\right)\pi \text{ m}^2$. Equating the first moment of the area of concrete above and below the neutral axis about the neutral axis,

$$0.2(c_{\text{con}})(c_{\text{con}}/2) = 2.4\left(10^{-3}\right)\pi\,(d - c_{\text{con}})$$

$$0.1{c_{\text{con}}}^2 = 2.4\left(10^{-3}\right)\pi d - 2.4\left(10^{-3}\right)\pi c_{\text{con}}$$

$${c_{\text{con}}}^2 = 0.024\pi d - 0.024\pi c_{\text{con}} \qquad \textbf{(4)}$$

Solving Eqs. (3) and (4),

$$d = 0.5308 \text{ m} = 531 \text{ mm} \qquad \textbf{Ans.}$$

$$c_{\text{con}} = 0.1659 \text{ m}$$

Thus, the moment of inertia of the transformed section is

$$I = \frac{1}{3}(0.2)\left(0.1659^3\right) + 2.4\left(10^{-3}\right)\pi(0.5308 - 0.1659)^2$$

6–131. Continued

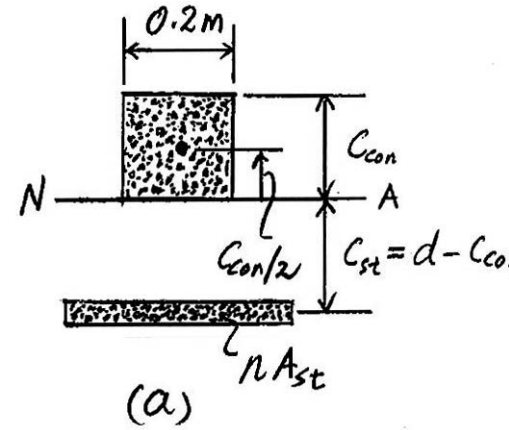

$$= 1.3084\left(10^{-3}\right)\ \text{m}^4$$

Substituting this result into Eq. (1),

$$M = 12.5\left(10^6\right)\left[\frac{1.3084\left(10^{-3}\right)}{0.1659}\right]$$

$$= 98\,594.98\ \text{N}\cdot\text{m} = 98.6\ \text{kN}\cdot\text{m}$$ **Ans.**

Ans:
$d = 531$ mm, $M = 98.6\ \text{kN}\cdot\text{m}$

***6–132.** The wide-flange section is reinforced with two wooden boards as shown. If this composite beam is subjected to an internal moment of $M = 100\ \text{kN}\cdot\text{m}$, determine the maximum bending stress developed in the steel and the wood. Take $E_w = 10$ GPa and $E_{st} = 200$ GPa.

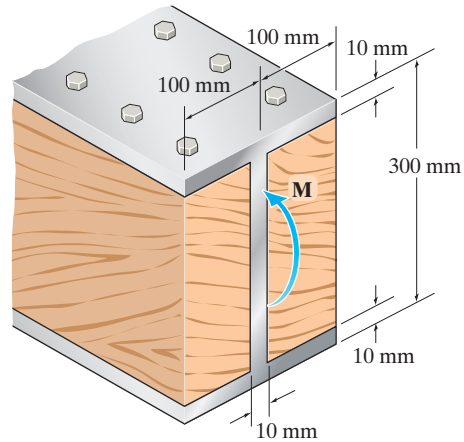

Section Properties: The cross section will be transformed into that of steel as shown in Fig. *a*. Here, $n = \dfrac{E_w}{E_{st}} = \dfrac{10}{200} = 0.05$. Thus, $b_{st} = 0.01 + 0.05b_w = 0.01 + 0.05(0.19) = 0.0195$ m. The moment of inertia of the transformed section about the neutral axis is

$$I = \frac{1}{12}(0.2)(0.3^3) - \frac{1}{12}(0.1805)(0.28^3) = 119.81(10^{-6})\ \text{m}^4$$

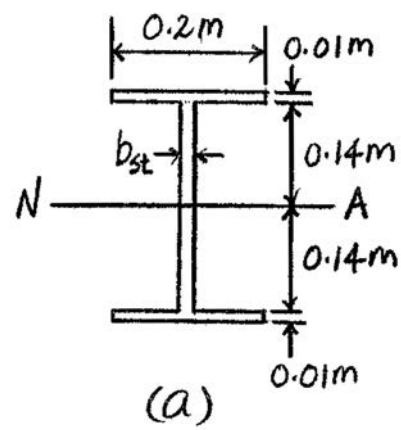

Maximum Bending Stress: For the steel,

$$(\sigma_{max})_{st} = \frac{Mc_{st}}{I} = \frac{100(10^3)(0.15)}{119.81(10^{-6})} = 125\ \text{MPa} \qquad \textbf{Ans.}$$

For the wood,

$$(\sigma_{max})_w = n\left(\frac{Mc_w}{I}\right) = 0.05\left[\frac{100(10^3)(0.14)}{119.81(10^{-6})}\right] = 5.84\ \text{MPa} \qquad \textbf{Ans.}$$

6–133. The wide-flange section is reinforced with two wooden boards as shown. If the steel and wood have an allowable bending stress of $(\sigma_{\text{allow}})_{\text{st}} = 150$ MPa and $(\sigma_{\text{allow}})_{\text{w}} = 6$ MPa, determine the maximum allowable internal moment **M** that can be applied to the beam. Take $E_w = 10$ GPa and $E_{st} = 200$ GPa.

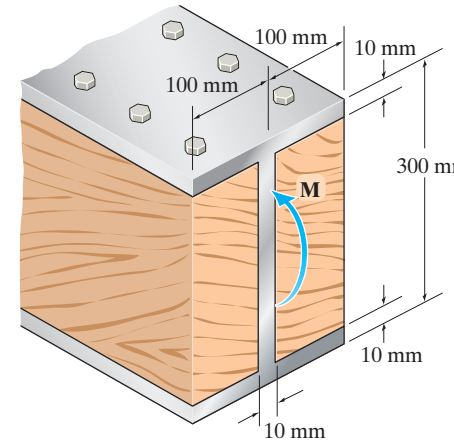

Section Properties: The cross section will be transformed into that of steel as shown in Fig. *a*. Here, $n = \dfrac{E_w}{E_{st}} = \dfrac{10}{200} = 0.5$. Thus, $b_{\text{st}} = 0.01 + nb_{\text{w}} = 0.01 + 0.05(0.19) = 0.0195$ m. The moment of inertia of the transformed section about the neutral axis is

$$I = \frac{1}{12}(0.2)(0.3^3) - \frac{1}{12}(0.1805)(0.28^3) = 119.81(10^{-6})\ \text{m}^4$$

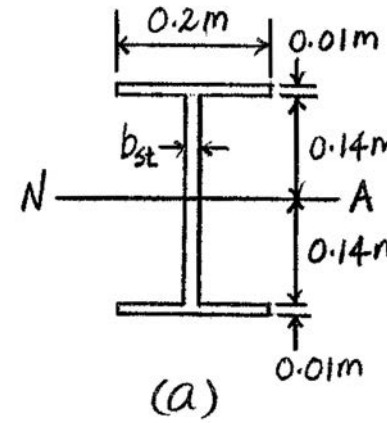

Bending Stress: Assuming failure of steel,

$$(\sigma_{\text{allow}})_{\text{st}} = \frac{Mc_{\text{st}}}{I}; \qquad 150(10^6) = \frac{M\,(0.15)}{119.81(10^{-6})}$$

$$M = 119\,805.33\ \text{N}\cdot\text{m} = 120\ \text{kN}\cdot\text{m}$$

Assuming failure of wood,

$$(\sigma_{\text{allow}})_{\text{w}} = n\frac{Mc_{\text{w}}}{I}; \qquad 6(10^6) = 0.05\left[\frac{M\,(0.14)}{119.81(10^{-6})}\right]$$

$$M = 102\,690.29\ \text{N}\cdot\text{m} = 103\ \text{kN}\cdot\text{m (controls)} \qquad \textbf{Ans.}$$

Ans:
$M = 103\ \text{kN}\cdot\text{m}$

6–134. If the beam is subjected to an internal moment of $M = 45\ \text{kN}\cdot\text{m}$, determine the maximum bending stress developed in the A-36 steel section A and the 2014-T6 aluminum alloy section B.

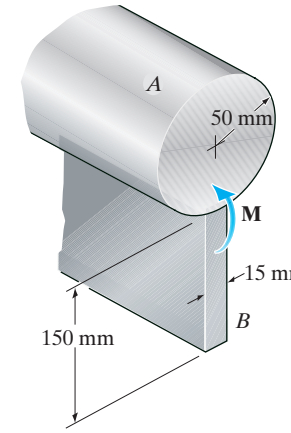

Section Properties: The cross section will be transformed into that of steel as shown in Fig. *a*. Here, $n = \dfrac{E_{al}}{E_{st}} = \dfrac{73.1\left(10^9\right)}{200\left(10^9\right)} = 0.3655$. Thus, $b_{st} = nb_{al} = 0.3655(0.015) = 0.0054825$ m. The location of the transformed section is

$$\bar{y} = \frac{\Sigma \bar{y} A}{\Sigma A} = \frac{0.075(0.15)(0.0054825) + 0.2\left[\pi\left(0.05^2\right)\right]}{0.15(0.0054825) + \pi\left(0.05^2\right)}$$

$$= 0.1882\ \text{m}$$

The moment of inertia of the transformed section about the neutral axis is

$$I = \Sigma \bar{I} + Ad^2 = \frac{1}{12}(0.0054825)\left(0.15^3\right) + 0.0054825(0.15)(0.1882 - 0.075)^2$$

$$+ \frac{1}{4}\pi\left(0.05^4\right) + \pi\left(0.05^2\right)(0.2 - 0.1882)^2$$

$$= 18.08\left(10^{-6}\right)\ \text{m}^4$$

Maximum Bending Stress: For the steel,

$$(\sigma_{max})_{st} = \frac{Mc_{st}}{I} = \frac{45\left(10^3\right)(0.06185)}{18.08\left(10^{-6}\right)} = 154\ \text{MPa} \qquad \textbf{Ans.}$$

For the aluminum alloy,

$$(\sigma_{max})_{al} = n\frac{Mc_{al}}{I} = 0.3655\left[\frac{45\left(10^3\right)(0.1882)}{18.08\left(10^{-6}\right)}\right] = 171\ \text{MPa} \qquad \textbf{Ans.}$$

Ans:
$(\sigma_{max})_{st} = 154$ MPa, $(\sigma_{max})_{al} = 171$ MPa

6–135. The Douglas fir beam is reinforced with A-36 straps at its center and sides. Determine the maximum stress developed in the wood and steel if the beam is subjected to a bending moment of $M_z = 750$ kip · ft. Sketch the stress distribution acting over the cross section.

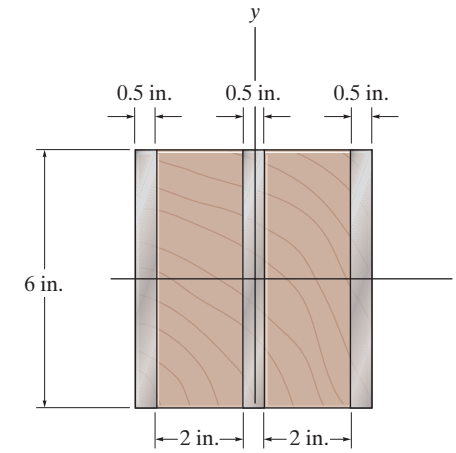

Section Properties: For the transformed section.

$$n = \frac{E_w}{E_{st}} = \frac{1.90(10^3)}{29.0(10^3)} = 0.065517$$

$$b_{st} = nb_w = 0.065517(4) = 0.26207 \text{ in.}$$

$$I_{NA} = \frac{1}{12}(1.5 + 0.26207)\left(6^3\right) = 31.7172 \text{ in}^4$$

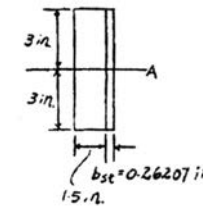

Maximum Bending Stress: Applying the flexure formula

$$(\sigma_{max})_{st} = \frac{Mc}{I} = \frac{7.5(12)(3)}{31.7172} = 8.51 \text{ ksi}$$ **Ans.**

$$(\sigma_{max})_w = n\frac{Mc}{I} = 0.065517\left[\frac{7.5(12)(3)}{31.7172}\right] = 0.558 \text{ ksi}$$ **Ans.**

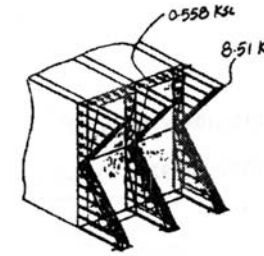

Ans:
$(\sigma_{max})_{st} = 8.51$ ksi, $(\sigma_{max})_w = 0.558$ ksi

***6–136.** For the curved beam in Fig. 6–40*a*, show that when the radius of curvature approaches infinity, the curved-beam formula, Eq. 6–24, reduces to the flexure formula, Eq. 6–13.

Normal Stress: Curved-beam formula

$$\sigma = \frac{M(R - r)}{Ar(\bar{r} - R)} \qquad \text{where } A' = \int_A \frac{dA}{r} \quad \text{and } R = \frac{A}{\int_A \frac{dA}{r}} = \frac{A}{A'}$$

$$\sigma = \frac{M(A - rA')}{Ar(\bar{r}A' - A)} \qquad \textbf{[1]}$$

$$r = \bar{r} + y \qquad \textbf{[2]}$$

$$\bar{r}A' = \bar{r}\int_A \frac{dA}{r} = \int_A \left(\frac{\bar{r}}{\bar{r} + y} - 1 + 1\right) dA$$

$$= \int_A \left(\frac{\bar{r} - \bar{r} - y}{\bar{r} + y} + 1\right) dA$$

$$= A - \int_A \frac{y}{\bar{r} + y}\, dA \qquad \textbf{[3]}$$

Denominator of Eq. [1] becomes,

$$Ar(\bar{r}A' - A) = Ar\left(A - \int_A \frac{y}{\bar{r} + y}\, dA - A\right) = -Ar\int_A \frac{y}{\bar{r} + y}\, dA$$

Using Eq. [2],

$$Ar(\bar{r}A' - A) = -A\int_A \left(\frac{\bar{r}y}{\bar{r} + y} + y - y\right) dA - Ay\int_A \frac{y}{\bar{r} + y}\, dA$$

$$= A\int_A \frac{y^2}{\bar{r} + y}\, dA - A\int_A y\, dA - Ay\int_A \frac{y}{\bar{r} + y}\, dA$$

$$= \frac{A}{\bar{r}}\int_A \left(\frac{y^2}{1 + \frac{y}{\bar{r}}}\right) dA - A\int_A y\, dA - \frac{Ay}{\bar{r}}\int_A \left(\frac{y}{1 + \frac{y}{\bar{r}}}\right) dA$$

But, $\int_A y\, dA = 0, \qquad \text{as } \frac{y}{\bar{r}} \to 0$

Then, $Ar(\bar{r}A' - A) \to \frac{A}{\bar{r}} I$

Eq. [1] becomes $\sigma = \frac{M\bar{r}}{AI}(A - rA')$

Using Eq. [2], $\sigma = \frac{M\bar{r}}{AI}(A - \bar{r}A' - yA')$

Using Eq. [3],

$$\sigma = \frac{M\bar{r}}{AI}\left[A - \left(A - \int_A \frac{y}{\bar{r} + y}\, dA\right) - y\int_A \frac{dA}{\bar{r} + y}\right]$$

$$= \frac{M\bar{r}}{AI}\left[\int_A \frac{y}{\bar{r} + y}\, dA - y\int_A \frac{dA}{\bar{r} + y}\right]$$

6–136. Continued

$$= \frac{M\bar{r}}{AI}\left[\int_A \left(\frac{\frac{y}{\bar{r}}}{1+\frac{y}{\bar{r}}}\right)dA - \frac{y}{\bar{r}}\int_A \left(\frac{dA}{1+\frac{y}{\bar{r}}}\right)\right]$$

As $\quad \frac{y}{\bar{r}} \to 0$

$$\int_A \left(\frac{\frac{y}{\bar{r}}}{1+\frac{y}{\bar{r}}}\right)dA = 0 \qquad \text{and} \qquad \frac{y}{\bar{r}}\int_A \left(\frac{dA}{1+\frac{y}{\bar{r}}}\right) = \frac{y}{\bar{r}}\int_A dA = \frac{yA}{\bar{r}}$$

Therefore, $\quad \sigma = \frac{M\bar{r}}{AI}\left(-\frac{yA}{\bar{r}}\right) = -\frac{My}{I}$ **(Q.E.D.)**

6–137. The curved member is subjected to the internal moment of $M = 50\ \text{kN}\cdot\text{m}$. Determine the percentage error introduced in the computation of maximum bending stress using the flexure formula for straight members.

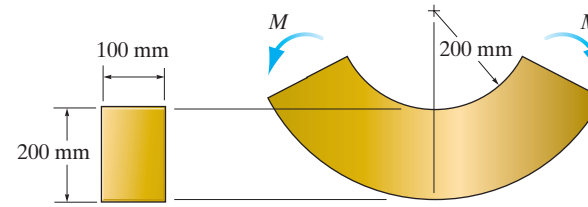

Straight Member: The maximum bending stress developed in the straight member

$$\sigma_{\max} = \frac{Mc}{I} = \frac{50(10^3)(0.1)}{\frac{1}{12}(0.1)(0.2^3)} = 75\ \text{MPa}$$

Curved Member: When $r = 0.2$ m, $\bar{r} = 0.3$ m, $r_A = 0.2$ m and $r_B = 0.4$ m, Fig. *a*. The location of the neutral surface from the center of curvature of the curve member is

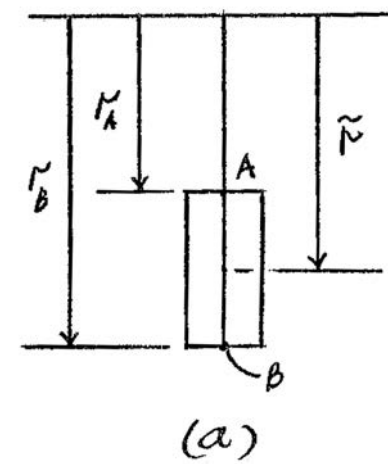

$$R = \frac{A}{\int_A \frac{dA}{r}} = \frac{0.1(0.2)}{0.1\ln\frac{0.4}{0.2}} = 0.288539\ \text{m}$$

Then

$$e = \bar{r} - R = 0.011461\ \text{m}$$

Here, $M = 50\ \text{kN}\cdot\text{m}$. Since it tends to decrease the curvature of the curved member.

$$\sigma_B = \frac{M(R - r_B)}{Aer_B} = \frac{50(10^3)(0.288539 - 0.4)}{0.1(0.2)(0.011461)(0.4)}$$

$$= -60.78\ \text{MPa} = 60.78\ \text{MPa (C)}$$

$$\sigma_A = \frac{M(R - r_A)}{Aer_A} = \frac{50(10^3)(0.288539 - 0.2)}{0.1(0.2)(0.011461)(0.2)}$$

$$= 96.57\ \text{MPa (T) (Max.)}$$

Thus,

$$\%\ \text{of error} = \left(\frac{96.57 - 75}{96.57}\right)100 = 22.3\%$$ **Ans.**

Ans:
% of error = 22.3%

6–138. The curved member is made from material having an allowable bending stress of $\sigma_{\text{allow}} = 100$ MPa. Determine the maximum allowable internal moment M that can be applied to the member.

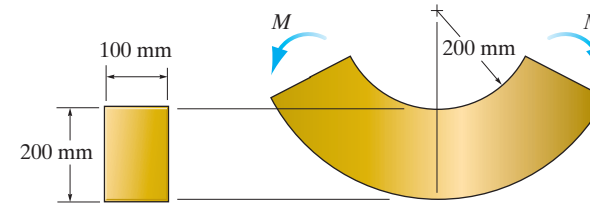

Internal Moment: M is negative since it tends to decrease the curvature of the curved member.

Section Properties: Referring to Fig. *a*, the location of the neutral surface from the center of curvature of the curve beam is

$$R = \frac{A}{\int_A \frac{dA}{r}} = \frac{0.1(0.2)}{0.1\ln\frac{0.4}{0.2}} = 0.288539 \text{ m}$$

Then

$$e = \bar{r} - R = 0.3 - 0.288539 = 0.011461 \text{ m}$$

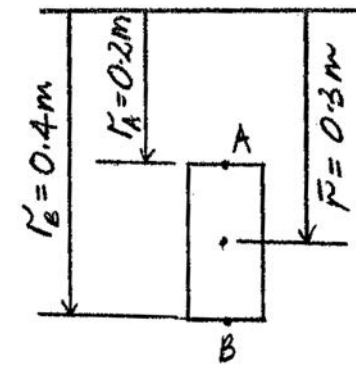

(a)

Allowable Bending Stress: The maximum stress occurs at either point A or B. For point A which is in tension,

$$\sigma_{\text{allow}} = \frac{M(R - r_A)}{Aer_A}; \qquad 100(10^6) = \frac{M(0.288539 - 0.2)}{0.1(0.2)(0.011461)(0.2)}$$

$$M = 51\,778.27 \text{ N}\cdot\text{m} = 51.8 \text{ kN}\cdot\text{m (controls)} \qquad \textbf{Ans.}$$

For point B which is in compression,

$$\sigma_{\text{allow}} = \frac{M(R - r_B)}{Aer_B}; \qquad -100(10^6) = \frac{M(0.288539 - 0.4)}{0.1(0.2)(0.011461)(0.4)}$$

$$M = 82\,260.10 \text{ N}\cdot\text{m} = 82.3 \text{ kN}\cdot\text{m}$$

Ans:
$M = 51.8 \text{ kN}\cdot\text{m}$

6–139. The curved beam is subjected to a bending moment of $M = 40\ \text{lb}\cdot\text{ft}$. Determine the maximum bending stress in the beam. Also, sketch a two-dimensional view of the stress distribution acting on section *a–a*.

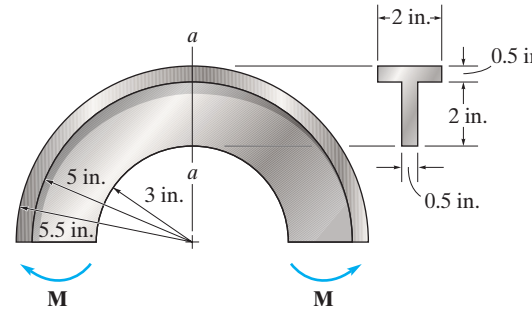

Section properties:

$$\bar{r} = \frac{4(2)(0.5) + 5.25(2)(0.5)}{2(0.5) + 2(0.5)} = 4.625 \text{ in.}$$

$$\Sigma\int_A \frac{dA}{r} = 0.5 \ln\frac{5}{3} + 2 \ln\frac{5.5}{5} = 0.446033 \text{ in.}$$

$$R = \frac{A}{\int_A \frac{dA}{r}} = \frac{2}{0.446033} = 4.4840 \text{ in.}$$

$$\bar{r} - R = 4.625 - 4.4840 = 0.1410 \text{ in.}$$

$$\sigma = \frac{M(R - r)}{Ar(\bar{r} - R)}$$

$$\sigma_A = \frac{40(12)(4.4840 - 3)}{2(3)(0.1410)} = 842 \text{ psi (T) (Max)}$$ **Ans.**

$$\sigma_B = \frac{40(12)(4.4840 - 5.5)}{2(5.5)(0.1410)} = -314 \text{ psi} = 314 \text{ psi (C)}$$

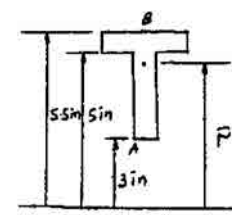

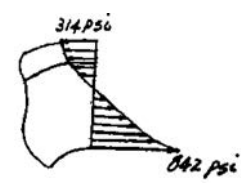

Ans:
$\sigma_{max} = 842$ psi (T)

***6–140.** The curved beam is made from material having an allowable bending stress of $\sigma_{\text{allow}} = 24$ ksi. Determine the maximum moment M that can be applied to the beam.

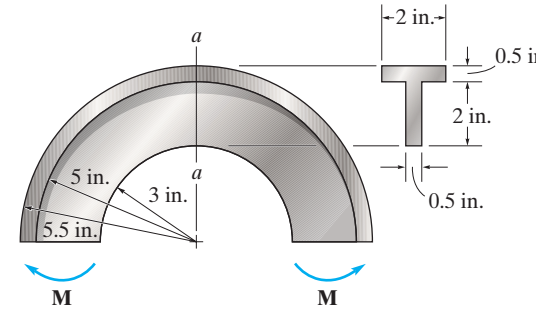

$$\bar{r} = \frac{4(2)(0.5) + 5.25(2)(0.5)}{2(0.5) + 2(0.5)} = 4.625 \text{ in.}$$

$$\Sigma\int_A \frac{dA}{r} = 0.5 \ln\frac{5}{3} + 2 \ln\frac{5.5}{5} = 0.4460 \text{ in.}$$

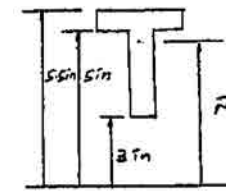

$$R = \frac{A}{\int_A \frac{dA}{r}} = \frac{2}{0.4460} = 4.4840 \text{ in.}$$

$$\bar{r} - R = 4.625 - 4.4840 = 0.1410 \text{ in.}$$

$$\sigma = \frac{M(R - r)}{Ar(\bar{r} - R)}$$

Assume tension failure:

$$24 = \frac{M(4.484 - 3)}{2(3)(0.1410)}$$

$M = 13.68 \text{ kip} \cdot \text{in.} = 1.14 \text{ kip} \cdot \text{ft}$ (controls) **Ans.**

Assume compression failure:

$$-24 = \frac{M(4.484 - 5.5)}{2(5.5)(0.1410)}; \qquad M = 36.64 \text{ kip} \cdot \text{in.} = 3.05 \text{ kip} \cdot \text{ft}$$

6–141. If $P = 3$ kN, determine the bending stress developed at points A, B, and C of the cross section at section $a-a$. Using these results, sketch the stress distribution on section $a-a$.

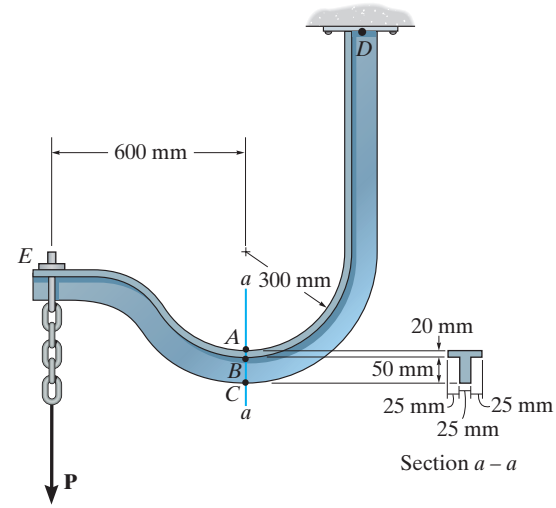

Internal Moment: The internal moment developed at section a–a can be determined by writing the moment equation of equilibrium about the neutral axis of the cross section at a–a. Using the free-body diagram shown in Fig. a,

$$\circlearrowleft + \Sigma M_{NA} = 0; \qquad 3(0.6) - M_{a-a} = 0 \qquad M_{a-a} = 1.8 \text{ kN}\cdot\text{m}$$

Here, $\mathbf{M}_{a-a}$ is considered negative since it tends to reduce the curvature of the curved segment of the beam.

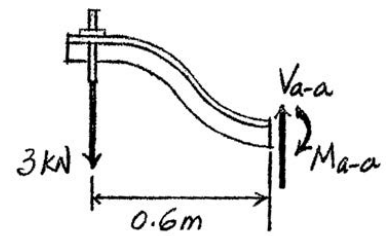

(a)

Section Properties: Referring to Fig. b, the location of the centroid of the cross section from the center of the beam's curvature is

$$\bar{r} = \frac{\Sigma \bar{r} A}{\Sigma A} = \frac{0.31(0.02)(0.075) + 0.345(0.05)(0.025)}{0.02(0.075) + 0.05(0.025)} = 0.325909 \text{ m}$$

The location of the neutral surface from the center of the beam's curvature can be determined from

$$R = \frac{A}{\Sigma \int_A \frac{dA}{r}}$$

where $A = 0.02(0.075) + 0.05(0.025) = 2.75(10^{-3})\text{ m}^2$

$$\Sigma \int_A \frac{dA}{r} = 0.075 \ln \frac{0.32}{0.3} + 0.025 \ln \frac{0.37}{0.32} = 8.46994(10^{-3}) \text{ m}$$

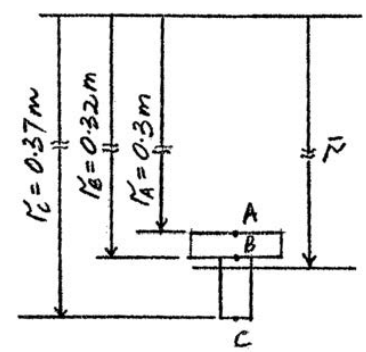

(b)

Thus,

$$R = \frac{2.75(10^{-3})}{8.46994(10^{-3})} = 0.324678 \text{ m}$$

then

$$e = \bar{r} - R = 0.325909 - 0.324678 = 1.23144(10^{-3}) \text{ m}$$

Normal Stress:

$$\sigma_A = \frac{M(R - r_A)}{Aer_A} = \frac{1.8(10^3)(0.324678 - 0.3)}{2.75(10^{-3})(1.23144)(10^{-3})(0.3)} = 43.7 \text{ MPa (T)} \qquad \textbf{Ans.}$$

$$\sigma_B = \frac{M(R - r_B)}{Aer_B} = \frac{1.8(10^3)(0.324678 - 0.32)}{2.75(10^{-3})(1.23144)(10^{-3})(0.32)} = 7.77 \text{ MPa (T)} \qquad \textbf{Ans.}$$

$$\sigma_C = \frac{M(R - r_C)}{Aer_C} = \frac{1.8(10^3)(0.324678 - 0.37)}{2.75(10^{-3})(1.23144)(10^{-3})(0.37)} = -65.1 \text{ MPa (C)} \qquad \textbf{Ans.}$$

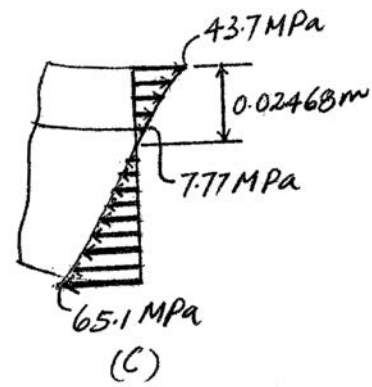

(C)

Ans:
$\sigma_A = 43.7$ MPa (T), $\sigma_B = 7.77$ MPa (T), $\sigma_C = -65.1$ MPa (C)

6–142. If the maximum bending stress at section $a-a$ is not allowed to exceed $\sigma_{\text{allow}} = 150$ MPa, determine the maximum allowable force **P** that can be applied to the end E.

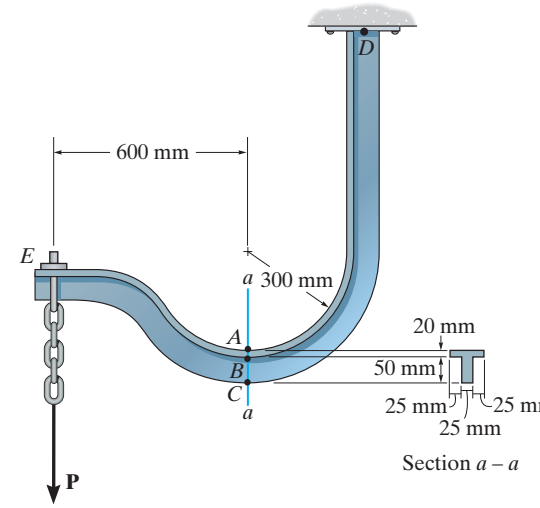

Internal Moment: The internal Moment developed at section a–a can be determined by writing the moment equation of equilibrium about the neutral axis of the cross section at a–a.

$$\circlearrowleft + \Sigma M_{NA} = 0; \qquad P(0.6) - M_{a-a} = 0 \qquad M_{a-a} = 0.6P$$

Here, $\mathbf{M}_{a-a}$ is considered positive since it tends to decrease the curvature of the curved segment of the beam.

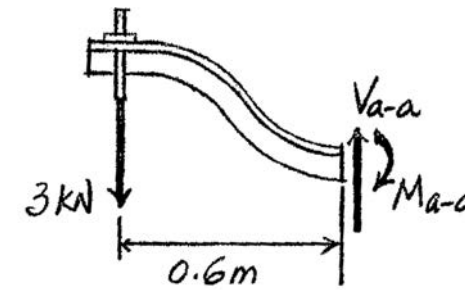

(a)

Section Properties: Referring to Fig. b, the location of the centroid of the cross section from the center of the beam's curvature is

$$\bar{r} = \frac{\Sigma \tilde{r} A}{\Sigma A} = \frac{0.31(0.02)(0.075) + 0.345(0.05)(0.025)}{0.02(0.075) + 0.05(0.025)} = 0.325909 \text{ m}$$

The location of the neutral surface from the center of the beam's curvature can be determined from

$$R = \frac{A}{\Sigma \int_A \frac{dA}{r}}$$

where $A = 0.02(0.075) + 0.05(0.025) = 2.75(10^{-3})\text{ m}^2$

$$\Sigma \int_A \frac{dA}{r} = 0.075 \ln \frac{0.32}{0.3} + 0.025 \ln \frac{0.37}{0.32} = 8.46994(10^{-3}) \text{ m}$$

Thus,

$$R = \frac{2.75(10^{-3})}{8.46994(10^{-3})} = 0.324678 \text{ m}$$

then

$$e = \bar{r} - R = 0.325909 - 0.324678 = 1.23144(10^{-3}) \text{ m}$$

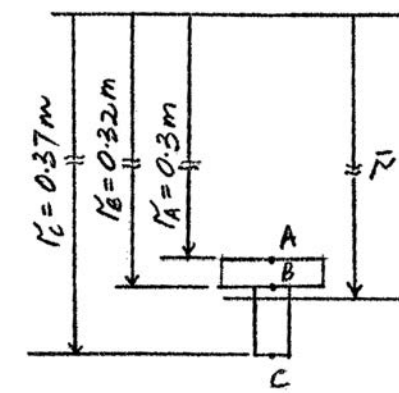

(b)

Allowable Normal Stress: The maximum normal stress occurs at either points A or C. For point A which is in tension,

$$\sigma_{\text{allow}} = \frac{M(R - r_A)}{Aer_A}; \qquad 150(10^6) = \frac{0.6P(0.324678 - 0.3)}{2.75(10^{-3})(1.23144)(10^{-3})(0.3)}$$

$$P = 10\,292.09 \text{ N} = 10.3 \text{ kN}$$

For point C which is in compression,

$$\sigma_{\text{allow}} = \frac{M(R - r_C)}{Aer_C}; \qquad -150(10^6) = \frac{0.6P(0.324678 - 0.37)}{2.75(10^{-3})(1.23144)(10^{-3})(0.37)}$$

$$P = 6911.55 \text{ N} = 6.91 \text{ kN (controls)} \qquad \textbf{Ans.}$$

Ans:
$P = 6.91$ kN

6–143. The elbow of the pipe has an outer radius of 0.75 in. and an inner radius of 0.63 in. If the assembly is subjected to the moments of $M = 25$ lb·in., determine the maximum stress developed at section $a-a$.

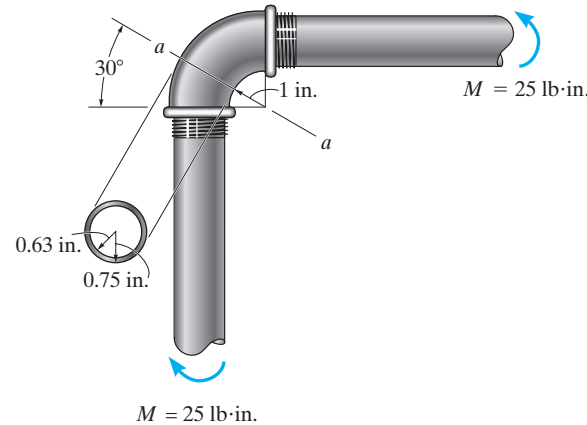

$$\int_A \frac{dA}{r} = \Sigma 2\pi\left(\bar{r} - \sqrt{\bar{r}^2 - c^2}\right)$$

$$= 2\pi\left(1.75 - \sqrt{1.75^2 - 0.75^2}\right) - 2\pi\left(1.75 - \sqrt{1.75^2 - 0.63^2}\right)$$

$$= 0.32375809 \text{ in.}$$

$$A = \pi(0.75^2) - \pi(0.63^2) = 0.1656\,\pi$$

$$R = \frac{A}{\int_A \frac{dA}{r}} = \frac{0.1656\,\pi}{0.32375809} = 1.606902679 \text{ in.}$$

$$\bar{r} - R = 1.75 - 1.606902679 = 0.14309732 \text{ in.}$$

$$(\sigma_{\max})_t = \frac{M(R - r_A)}{A r_A(\bar{r} - R)} = \frac{25(1.606902679 - 1)}{0.1656\,\pi(1)(0.14309732)} = 204 \text{ psi (T)} \qquad \textbf{Ans.}$$

$$(\sigma_{\max})_c = \; = \frac{M(R - r_B)}{A r_B(\bar{r} - R)} = \frac{25(1.606902679 - 2.5)}{0.1656\pi(2.5)(0.14309732)} = 120 \text{ psi (C)} \qquad \textbf{Ans.}$$

Ans:
$(\sigma_{\max})_t = 204$ psi, $(\sigma_{\max})_c = 120$ psi

***6–144.** The curved member is symmetric and is subjected to a moment of $M = 600\ \text{lb}\cdot\text{ft}$. Determine the bending stress in the member at points A and B. Show the stress acting on volume elements located at these points.

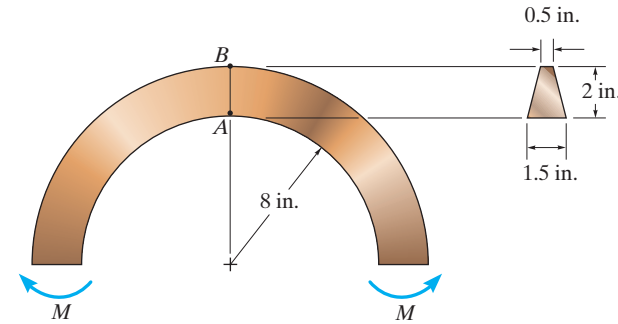

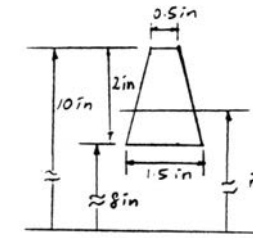

$$A = 0.5(2) + \frac{1}{2}(1)(2) = 2\ \text{in}^2$$

$$\bar{r} = \frac{\Sigma \bar{r} A}{\Sigma A} = \frac{9(0.5)(2) + 8.6667\left(\frac{1}{2}\right)(1)(2)}{2} = 8.83333\ \text{in.}$$

$$\int_A \frac{dA}{r} = 0.5 \ln \frac{10}{8} + \left[\frac{1(10)}{(10-8)}\left[\ln \frac{10}{8}\right] - 1\right] = 0.22729\ \text{in.}$$

$$R = \frac{A}{\int_A \frac{dA}{r}} = \frac{2}{0.22729} = 8.7993\ \text{in.}$$

$$\bar{r} - R = 8.83333 - 8.7993 = 0.03398\ \text{in.}$$

$$\sigma = \frac{M(R - r)}{Ar(\bar{r} - R)}$$

$$\sigma_A = \frac{600(12)(8.7993 - 8)}{2(8)(0.03398)} = 10.6\ \text{ksi (T)} \qquad \textbf{Ans.}$$

$$\sigma_B = \frac{600(12)(8.7993 - 10)}{2(10)(0.03398)} = -12.7\ \text{ksi} = 12.7\ \text{ksi (C)} \qquad \textbf{Ans.}$$

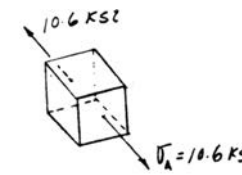

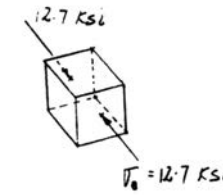

6–145. The curved bar used on a machine has a rectangular cross section. If the bar is subjected to a couple as shown, determine the maximum tensile and compressive stress acting at section $a-a$. Sketch the stress distribution on the section in three dimensions.

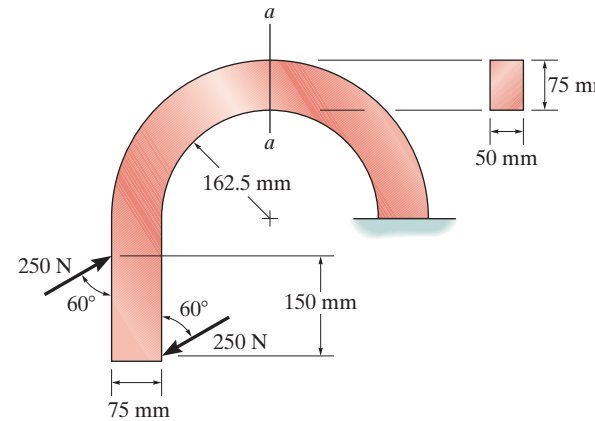

$$\circlearrowleft + \Sigma M_O = 0; \qquad M - 250 \cos 60° \, (0.075) - 250 \sin 60° \, (0.15) = 0$$

$$M = 41.851 \text{ N} \cdot \text{m}$$

$$\int_A \frac{dA}{r} = b \ln \frac{r_2}{r_1} = 0.05 \ln \frac{0.2375}{0.1625} = 0.018974481 \text{ m}$$

$$A = (0.075)(0.05) = 3.75(10^{-3}) \text{ m}^2$$

$$R = \frac{A}{\int_A \frac{dA}{r}} = \frac{3.75(10^{-3})}{0.018974481} = 0.197633863 \text{ m}$$

$$\bar{r} - R = 0.2 - 0.197633863 = 0.002366137$$

$$\sigma_A = \frac{M(R - r_A)}{A r_A (\bar{r} - R)} = \frac{41.851(0.197633863 - 0.2375)}{3.75(10^{-3})(0.2375)(0.002366137)} = -791.72 \text{ kPa}$$

$$= 792 \text{ kPa (C)} \qquad \textbf{Ans.}$$

$$\sigma_B = \frac{M(R - r_B)}{A r_B (\bar{r} - R)} = \frac{41.851\,(0.197633863 - 0.1625)}{3.75(10^{-3})(0.1625)(0.002366137)} = 1.02 \text{ MPa (T)} \qquad \textbf{Ans.}$$

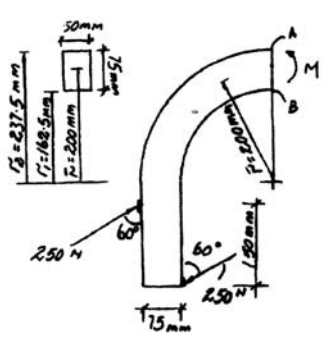

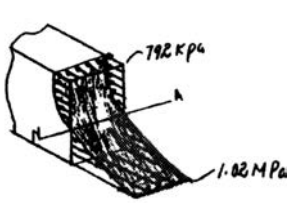

Ans:
$(\sigma_{\max})_c = 792$ kPa, $(\sigma_{\max})_t = 1.02$ MPa

6–146. The fork is used as part of a nosewheel assembly for an airplane. If the maximum wheel reaction at the end of the fork is 840 lb, determine the maximum bending stress in the curved portion of the fork at section $a-a$. There the cross-sectional area is circular, having a diameter of 2 in.

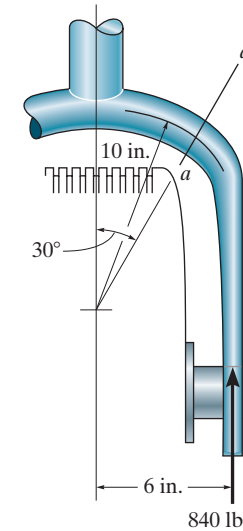

$$\circlearrowleft + \Sigma M_C = 0; \qquad M - 840(6 - 10 \sin 30°) = 0$$

$$M = 840 \text{ lb} \cdot \text{in.}$$

$$\int_A \frac{dA}{r} = 2\pi(\bar{r} - \sqrt{\bar{r}^2 - c^2})$$

$$= 2\pi(10 - \sqrt{2(10^2 - (1)^2)})$$

$$= 0.314948615 \text{ in.}$$

$$A = \pi c^2 = \pi (1)^2 = \pi \text{ in}^2$$

$$R = \frac{A}{\int_A \frac{dA}{r}} = \frac{\pi}{0.314948615} = 9.974937173 \text{ in.}$$

$$\bar{r} - R = 10 - 9.974937173 = 0.025062827 \text{ in.}$$

$$\sigma_A = \frac{M(R - r_A)}{Ar_A(\bar{r} - R)} = \frac{840(9.974937173 - 9)}{\pi(9)(0.025062827)} = 1.16 \text{ ksi (T) (max)} \qquad \textbf{Ans.}$$

$$\sigma_B = \frac{M(R - r_B)}{Ar_B(\bar{r} - R)} = \frac{840(9.974937173 - 11)}{\pi(11)(0.025062827)} = -0.994 \text{ ksi (C)}$$

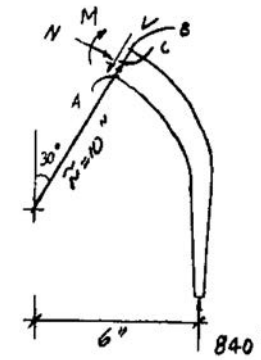

Ans:
$(\sigma_{\max})_t = 1.16$ ksi, $(\sigma_{\max})_c = 0.994$ ksi

6–147. If the curved member is subjected to the internal moment of $M = 600$ lb·ft, determine the bending stress developed at points A, B and C. Using these results, sketch the stress distribution on the cross section.

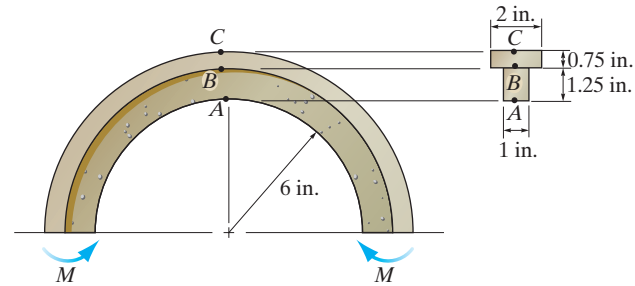

Internal Moment: **M** = −600 ft is negative since it tends to increase the curvature of the curved member.

Section Properties: The location of the centroid of the cross section from the center of the beam's curvature, Fig. *a*, is

$$\bar{r} = \frac{\Sigma \tilde{r} A}{\Sigma A} = \frac{6.625(1.25)(1) + 7.625(0.75)(2)}{1.25(1) + 0.75(2)} = 7.17045 \text{ in.}$$

The location of the neutral surface from the center of the beam's curvature can be determined from

$$R = \frac{A}{\Sigma \int_A \frac{dA}{r}}$$

where

$$A = 1.25(1) + 0.75(2) = 2.75 \text{ in}^2$$

$$\Sigma \int_A \frac{dA}{r} = (1)\ln\frac{7.25}{6} + 2\ln\frac{8}{7.25} = 0.38612 \text{ in}$$

Thus,

$$R = \frac{2.75}{0.38612} = 7.122099 \text{ in.}$$

and

$$e = \bar{r} - R = 0.0483559 \text{ in.}$$

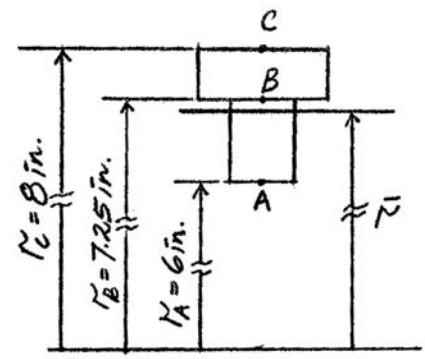

(a)

Normal Stress:

$$\sigma_A = \frac{M(R - r_A)}{Aer_A} = \frac{-600(12)(7.122099 - 6)}{2.75(0.0483559)(6)} = -10.1 \text{ ksi} = 10.1 \text{ ksi (C)} \qquad \textbf{Ans.}$$

$$\sigma_B = \frac{M(R - r_B)}{Aer_B} = \frac{-600(12)(7.122099 - 7.25)}{2.75(0.0483559)(7.25)} = 0.955 \text{ ksi (T)} \qquad \textbf{Ans.}$$

$$\sigma_C = \frac{M(R - r_C)}{Aer_C} = \frac{-600(12)(7.122099 - 8)}{2.75(0.0483559)(8)} = 5.94 \text{ ksi (T)} \qquad \textbf{Ans.}$$

The normal stress distribution across the cross section is shown in Fig. *b*.

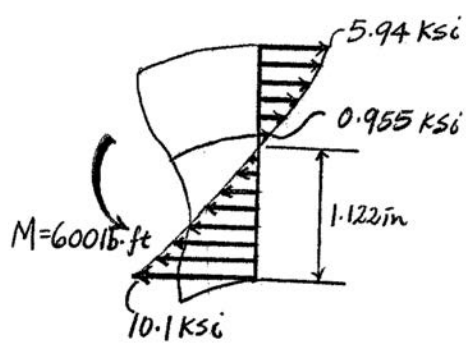

(b)

Ans:
$\sigma_A = 10.1$ ksi (C), $\sigma_B = 0.955$ ksi (T),
$\sigma_C = 5.94$ ksi (T)

***6–148.** If the curved member is made from material having an allowable bending stress of $\sigma_{\text{allow}} = 15$ ksi, determine the maximum allowable internal moment **M** that can be applied to the member.

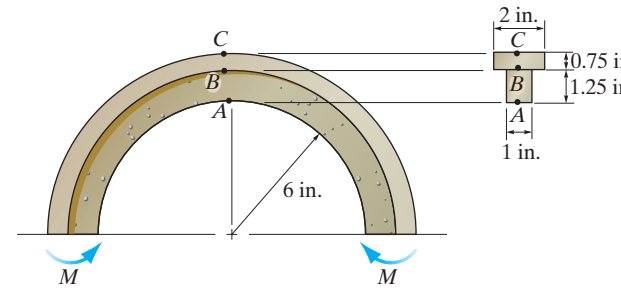

Internal Moment: M is negative since it tends to increase the curvature of the curved member.

Section Properties: The location of the centroid of the cross section from the center of the beam's curvature, Fig. *a*, is

$$\bar{r} = \frac{\Sigma \tilde{r} A}{\Sigma A} = \frac{6.625(1.25)(1) + 7.625(0.75)(2)}{1.25(1) + 0.75(2)} = 7.17045 \text{ in.}$$

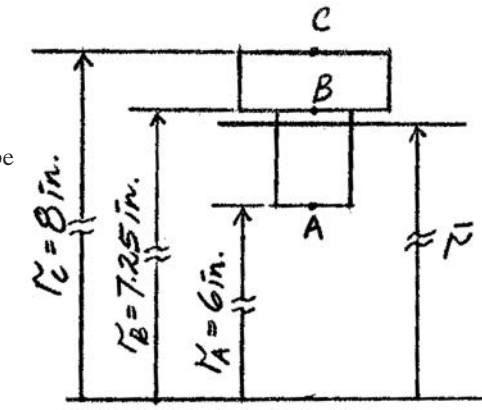

(a)

The location of the neutral surface from the center of the beam's curvature can be determined from

$$R = \frac{A}{\Sigma \int_A \frac{dA}{r}}$$

where

$$A = 1.25(1) + 0.75(2) = 2.75 \text{ in}^2$$

$$\Sigma \int_A \frac{dA}{r} = (1)\ln\frac{7.25}{6} + 2\ln\frac{8}{7.25} = 0.38612 \text{ in}$$

Thus,

$$R = \frac{2.75}{0.38612} = 7.122099 \text{ in.}$$

and

$$e = \bar{r} - R = 0.0483559 \text{ in.}$$

Normal Stress: The maximum normal stress can occur at either point A or C. For point A which is in compression,

$$\sigma_{\text{allow}} = \frac{M(r_A - R)}{Aer_A}; \qquad -15 = \frac{M(7.122099 - 6)}{2.75(0.0483559)(6)}$$

$$M = -10.67 \text{ kip} \cdot \text{in} = 889 \text{ lb} \cdot \text{ft (controls)} \qquad \textbf{Ans.}$$

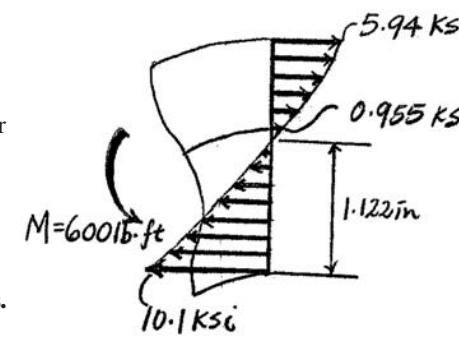

(b)

For point C which is in tension,

$$\sigma_{\text{allow}} = \frac{M(r_C - R)}{Aer_C}; \qquad 15 = \frac{M(7.122099 - 8)}{2.75(0.0483559)(8)}$$

$$M = -18.18 \text{ kip} \cdot \text{in} = 1.51 \text{ lb} \cdot \text{ft}$$

6–149. A 100-mm-diameter circular rod is bent into an S shape. If it is subjected to the applied moments $M = 125\ \text{N}\cdot\text{m}$ at its ends, determine the maximum tensile and compressive stress developed in the rod.

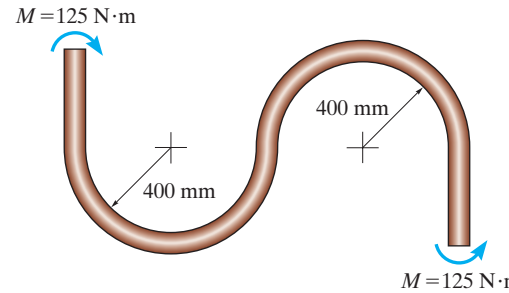

$$\int_A \frac{dA}{r} = 2\pi(\bar{r} - \sqrt{\bar{r}^2 - c^2})$$

$$= 2\pi(0.45 - \sqrt{0.45^2 - 0.05^2}) = 0.01750707495\ \text{m}$$

$$A = \pi c^2 = \pi(0.05^2) = 2.5(10^{-3})\pi\ \text{m}^2$$

$$R = \frac{A}{\int_A \frac{dA}{r}} = \frac{2.5(10^{-3})\pi}{0.017507495} = 0.448606818$$

$$\bar{r} - R = 0.45 - 0.448606818 = 1.39318138(10^{-3})\ \text{m}$$

On the upper edge of each curve:

$$\sigma_A = \frac{M(R - r_A)}{Ar_A(\bar{r} - R)} = \frac{-125(0.448606818 - 0.4)}{2.5(10^{-3})\pi(0.4)(1.39318138)(10^{-3})} = -1.39\ \text{MPa (max)} \quad \textbf{Ans.}$$

$$\sigma_D = \frac{M(R - r_D)}{Ar_D(\bar{r} - R)} = \frac{125(0.448606818 - 0.5)}{2.5(10^{-3})\pi(0.5)(1.39318138)(10^{-3})} = -1.17\ \text{MPa}$$

On the lower edge of each curve:

$$\sigma_B = \frac{M(R - r_B)}{Ar_B(\bar{r} - R)} = \frac{-125(0.448606818 - 0.5)}{2.5(10^{-3})\pi(0.5)(1.39318138)(10^{-3})} = 1.17\ \text{MPa}$$

$$\sigma_C = \frac{M(R - r_C)}{Ar_C(\bar{r} - R)} = \frac{125(0.448606818 - 0.4)}{2.5(10^{-3})\pi(0.4)(1.39318138)(10^{-3})} = 1.39\ \text{MPa} \quad \textbf{Ans.}$$

Ans:
$\sigma_{\max} = \pm 1.39\ \text{MPa}$

6–150. The bar is subjected to a moment of $M = 153\ \text{N}\cdot\text{m}$. Determine the smallest radius r of the fillets so that an allowable bending stress of $\sigma_{\text{allow}} = 120\ \text{MPa}$ is not exceeded.

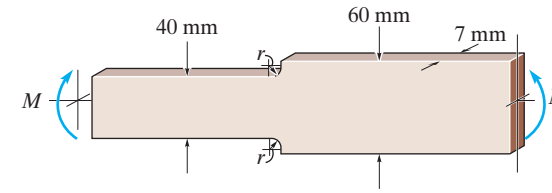

$$\sigma_{\max} = K\frac{Mc}{I}$$

$$120(10^6) = K\left[\frac{(153)(0.02)}{\frac{1}{12}(0.007)(0.04)^3}\right]$$

$$K = 1.46$$

$$\frac{w}{h} = \frac{60}{40} = 1.5$$

From Fig. 6-43,

$$\frac{r}{h} = 0.2$$

$$r = 0.2(40) = 8.0\ \text{mm}$$ **Ans.**

Ans:
$r = 8.0\ \text{mm}$

6–151. The bar is subjected to a moment of $M = 17.5\ \text{N}\cdot\text{m}$. If $r = 6$ mm determine the maximum bending stress in the material.

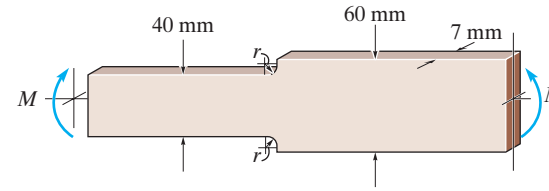

$$\frac{w}{h} = \frac{60}{40} = 1.5; \qquad \frac{r}{h} = \frac{6}{40} = 0.15$$

From Fig. 6–43,

$K = 1.57$

$$\sigma_{\max} = K\frac{Mc}{I} = 1.57\left[\frac{17.5(0.02)}{\frac{1}{12}(0.007)(0.04)^3}\right] = 14.7\ \text{MPa} \qquad \textbf{Ans.}$$

Ans:
$\sigma_{\max} = 14.7$ MPa

***6–152.** The bar is subjected to a moment of $M = 40\ \text{N}\cdot\text{m}$. Determine the smallest radius r of the fillets so that an allowable bending stress of $\sigma_{\text{allow}} = 124\ \text{MPa}$ is not exceeded.

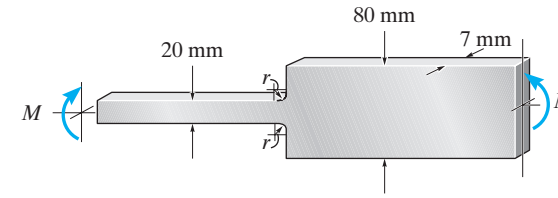

Allowable Bending Stress:

$$\sigma_{\text{allow}} = K\frac{Mc}{I}$$

$$124\left(10^6\right) = K\left[\frac{40(0.01)}{\frac{1}{12}(0.007)(0.02^3)}\right]$$

$$K = 1.45$$

Stress Concentration Factor: From the graph in the text

with $\frac{w}{h} = \frac{80}{20} = 4$ and $K = 1.45$, then $\frac{r}{h} = 0.25$.

$$\frac{r}{20} = 0.25$$

$$r = 5.00\ \text{mm}$$ **Ans.**

6–153. The bar is subjected to a moment of $M = 17.5\ \text{N}\cdot\text{m}$. If $r = 5$ mm, determine the maximum bending stress in the material.

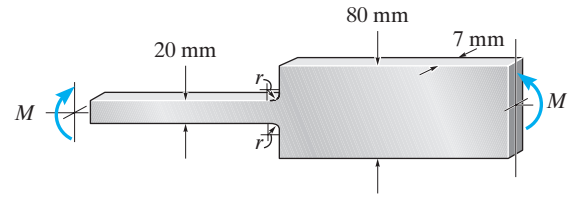

Stress Concentration Factor: From the graph in the text with $\frac{w}{h} = \frac{80}{20} = 4$ and $\frac{r}{h} = \frac{5}{20} = 0.25$, then $K = 1.45$.

Maximum Bending Stress:

$$\sigma_{\max} = K\frac{Mc}{I}$$

$$= 1.45\left[\frac{17.5(0.01)}{\frac{1}{12}(0.007)(0.02^3)}\right]$$

$$= 54.4\ \text{MPa}$$ **Ans.**

Ans:
$\sigma_{\max} = 54.4$ MPa

6–154. The simply supported notched bar is subjected to two forces **P**. Determine the largest magnitude of **P** that can be applied without causing the material to yield. The material is A-36 steel. Each notch has a radius of $r = 0.125$ in.

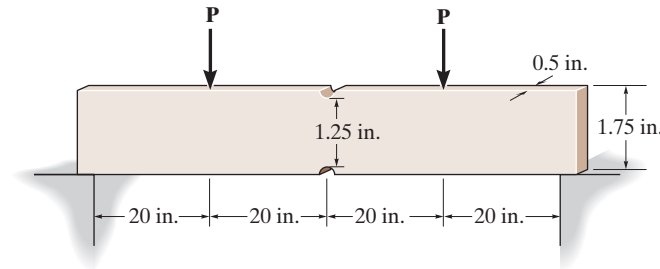

$$b = \frac{1.75 - 1.25}{2} = 0.25$$

$$\frac{b}{r} = \frac{0.25}{0.125} = 2; \qquad \frac{r}{h} = \frac{0.125}{1.25} = 0.1$$

From Fig. 6-44. $K = 1.92$

$$\sigma_Y = K\frac{Mc}{I}; \qquad 36(10^3) = 1.92\left[\frac{20P(0.625)}{\frac{1}{12}(0.5)(1.25)^3}\right]$$

$P = 122$ lb **Ans.**

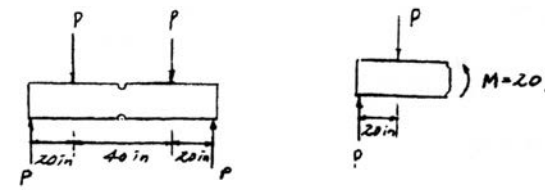

Ans:
$P = 122$ lb

6–155. The simply supported notched bar is subjected to the two loads, each having a magnitude of $P = 100$ lb. Determine the maximum bending stress developed in the bar, and sketch the bending-stress distribution acting over the cross section at the center of the bar. Each notch has a radius of $r = 0.125$ in.

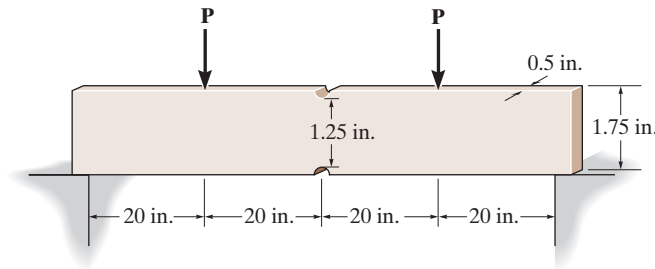

$$b = \frac{1.75 - 1.25}{2} = 0.25$$

$$\frac{b}{r} = \frac{0.25}{0.125} = 2; \qquad \frac{r}{h} = \frac{0.125}{1.25} = 0.1$$

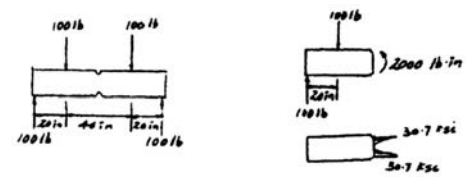

From Fig. 6-44, $K = 1.92$

$$\sigma_{max} = K\frac{Mc}{I} = 1.92\left[\frac{2000(0.625)}{\frac{1}{12}(0.5)(1.25)^3}\right] = 29.5 \text{ ksi}$$ **Ans.**

Ans:
$\sigma_{max} = 29.5$ ksi

***6–156.** Determine the length L of the center portion of the bar so that the maximum bending stress at A, B, and C is the same. The bar has a thickness of 10 mm.

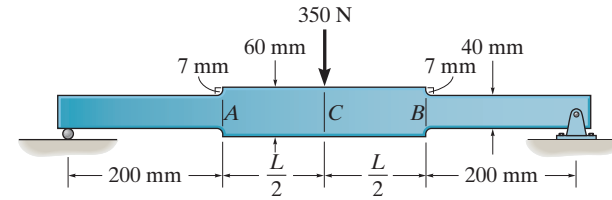

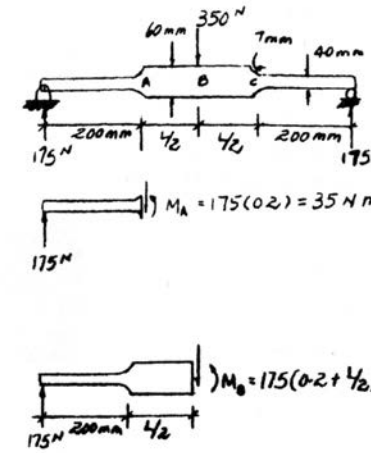

$$\frac{w}{h} = \frac{60}{40} = 1.5 \qquad \frac{r}{h} = \frac{7}{40} = 0.175$$

From Fig. 6-43, $K = 1.5$

$$(\sigma_A)_{\max} = K\frac{M_A c}{I} = 1.5\left[\frac{(35)(0.02)}{\frac{1}{12}(0.01)(0.04^3)}\right] = 19.6875 \text{ MPa}$$

$$(\sigma_B)_{\max} = (\sigma_A)_{\max} = \frac{M_B c}{I}$$

$$19.6875(10^6) = \frac{175(0.2 + \frac{L}{2})(0.03)}{\frac{1}{12}(0.01)(0.06^3)}$$

$$L = 0.95 \text{ m} = 950 \text{ mm}$$ **Ans.**

6–157. The stepped bar has a thickness of 15 mm. Determine the maximum moment that can be applied to its ends if it is made of a material having an allowable bending stress of $\sigma_{\text{allow}} = 200$ MPa.

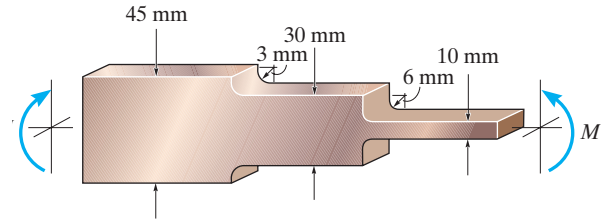

Stress Concentration Factor:

For the smaller section with $\frac{w}{h} = \frac{30}{10} = 3$ and $\frac{r}{h} = \frac{6}{10} = 0.6$, we have $K = 1.2$ obtained from the graph in the text.

For the larger section with $\frac{w}{h} = \frac{45}{30} = 1.5$ and $\frac{r}{h} = \frac{3}{30} = 0.1$, we have $K = 1.77$ obtained from the graph in the text.

Allowable Bending Stress:

For the smaller section

$$\sigma_{\max} = \sigma_{\text{allow}} = K\frac{Mc}{I};$$

$$200\left(10^6\right) = 1.2\left[\frac{M(0.005)}{\frac{1}{12}(0.015)(0.01^3)}\right]$$

$$M = 41.7\ \text{N}\cdot\text{m}\ \ (\textit{Controls !})$$ **Ans.**

For the larger section

$$\sigma_{\max} = \sigma_{\text{allow}} = K\frac{Mc}{I};$$

$$200\left(10^6\right) = 1.77\left[\frac{M(0.015)}{\frac{1}{12}(0.015)(0.03^3)}\right]$$

$$M = 254\ \text{N}\cdot\text{m}$$

Ans:
$M = 41.7\ \text{N}\cdot\text{m}$

6–158. Determine the shape factor for the wide-flange beam.

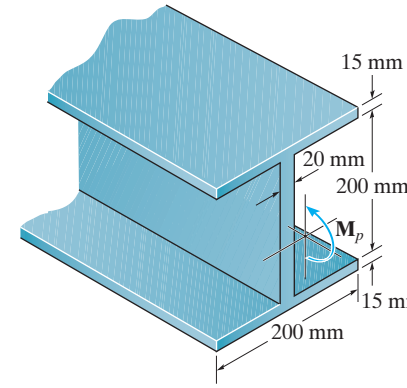

$$I_x = \frac{1}{12}(0.2)(0.23)^3 - \frac{1}{12}(0.18)(0.2)^3 = 82.78333(10^{-6})\ \text{m}^4$$

$$C_1 = T_1 = \sigma_Y(0.2)(0.015) = 0.003\,\sigma_Y$$

$$C_2 = T_2 = \sigma_Y(0.1)(0.02) = 0.002\,\sigma_Y$$

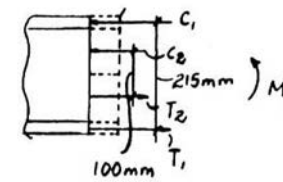

$$M_p = 0.003\,\sigma_Y(0.215) + 0.002\,\sigma_Y(0.1) = 0.000845\,\sigma_Y$$

$$\sigma_Y = \frac{M_Y c}{I}$$

$$M_Y = \frac{\sigma_Y(82.78333)(10^{-6})}{0.115} = 0.000719855\,\sigma_Y$$

$$k = \frac{M_p}{M_Y} = \frac{0.000845\,\sigma_Y}{0.000719855\,\sigma_Y} = 1.17$$ **Ans.**

Ans:
$k = 1.17$

6–159. The beam is made of an elastic-plastic material for which $\sigma_Y = 250$ MPa. Determine the residual stress in the beam at its top and bottom after the plastic moment $\mathbf{M}_p$ is applied and then released.

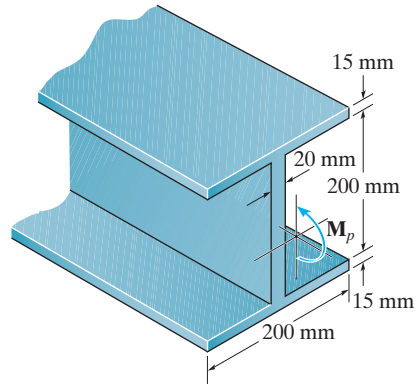

$$I_x = \frac{1}{12}(0.2)(0.23)^3 - \frac{1}{12}(0.18)(0.2)^3 = 82.78333(10^{-6})\ \text{m}^4$$

$$C_1 = T_1 = \sigma_Y(0.2)(0.015) = 0.003\,\sigma_Y$$

$$C_2 = T_2 = \sigma_Y(0.1)(0.02) = 0.002\,\sigma_Y$$

$$M_p = 0.003\,\sigma_Y(0.215) + 0.002\,\sigma_Y(0.1) = 0.000845\,\sigma_Y$$

$$= 0.000845(250)(10^6) = 211.25\ \text{kN}\cdot\text{m}$$

$$\sigma' = \frac{M_p c}{I} = \frac{211.25(10^3)(0.115)}{82.78333(10^{-6})} = 293.5\ \text{MPa}$$

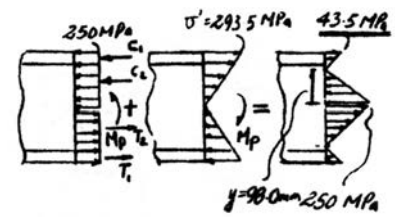

$$\frac{y}{250} = \frac{0.115}{293.5}; \qquad y = 0.09796\ \text{m} = 98.0\ \text{mm}$$

$$\sigma_{\text{top}} = \sigma_{\text{bottom}} = 293.5 - 250 = 43.5\ \text{MPa}$$ **Ans.**

Ans:
$\sigma_{\text{top}} = \sigma_{\text{bottom}} = 43.5$ MPa

***6–160.** Determine the shape factor for the cross section of the H-beam.

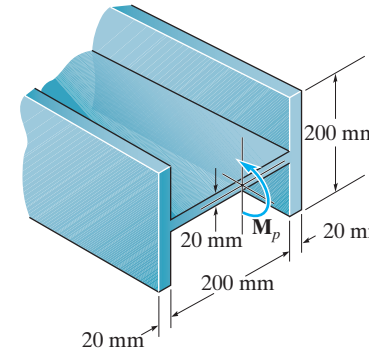

$$I_x = \frac{1}{12}(0.2)(0.02^3) + 2\left(\frac{1}{12}\right)(0.02)(0.2^3) = 26.8(10^{-6})\ \text{m}^4$$

$$C_1 = T_1 = \sigma_Y(2)(0.09)(0.02) = 0.0036\,\sigma_Y$$

$$C_2 = T_2 = \sigma_Y(0.01)(0.24) = 0.0024\,\sigma_Y$$

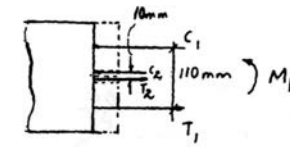

$$M_p = 0.0036\,\sigma_Y(0.11) + 0.0024\,\sigma_Y(0.01) = 0.00042\,\sigma_Y$$

$$\sigma_Y = \frac{M_Y c}{I}$$

$$M_Y = \frac{\sigma_Y(26.8)(10^{-6})}{0.1} = 0.000268\,\sigma_Y$$

$$k = \frac{M_p}{M_Y} = \frac{0.00042\,\sigma_Y}{0.000268\,\sigma_Y} = 1.57 \qquad \textbf{Ans.}$$

6–161. The H-beam is made of an elastic-plastic material for which $\sigma_Y = 250$ MPa. Determine the residual stress in the top and bottom of the beam after the plastic moment $\mathbf{M}_p$ is applied and then released.

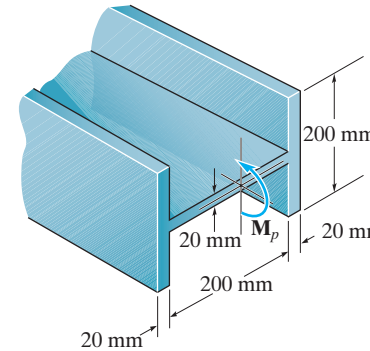

$$I_x = \frac{1}{12}(0.2)(0.02^3) + 2\left(\frac{1}{12}\right)(0.02)(0.2^3) = 26.8(10^{-6})\ \text{m}^4$$

$$C_1 = T_1 = \sigma_Y(2)(0.09)(0.02) = 0.0036\,\sigma_Y$$

$$C_2 = T_2 = \sigma_Y(0.01)(0.24) = 0.0024\,\sigma_Y$$

$$M_p = 0.0036\,\sigma_Y(0.11) + 0.0024\,\sigma_Y(0.01) = 0.00042\,\sigma_Y$$

$$M_p = 0.00042(250)(10^6) = 105\ \text{kN}\cdot\text{m}$$

$$\sigma' = \frac{M_p c}{I} = \frac{105(10^3)(0.1)}{26.8(10^{-6})} = 392\ \text{MPa}$$

$$\frac{y}{250} = \frac{0.1}{392}; \qquad y = 0.0638 = 63.8\ \text{mm}$$

$$\sigma_T = \sigma_B = 392 - 250 = 142\ \text{MPa}$$ **Ans.**

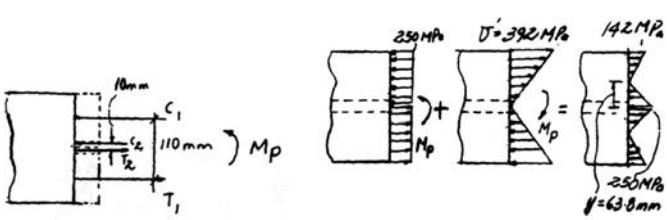

Ans:
$\sigma_{\text{top}} = \sigma_{\text{bottom}} = 142$ MPa

6–162. The box beam is made of an elastic perfectly plastic material for which $\sigma_Y = 250$ MPa. Determine the residual stress in the top and bottom of the beam after the plastic moment $\mathbf{M}_p$ is applied and then released.

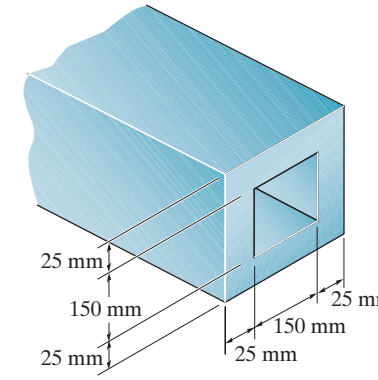

Plastic Moment:

$$M_P = 250\left(10^6\right)(0.2)(0.025)(0.175) + 250\left(10^6\right)(0.075)(0.05)(0.075)$$

$$= 289062.5 \text{ N} \cdot \text{m}$$

Modulus of Rupture: The modulus of rupture σ_r can be determined using the flexure formula with the application of reverse, plastic moment $M_P = 289062.5$ N · m.

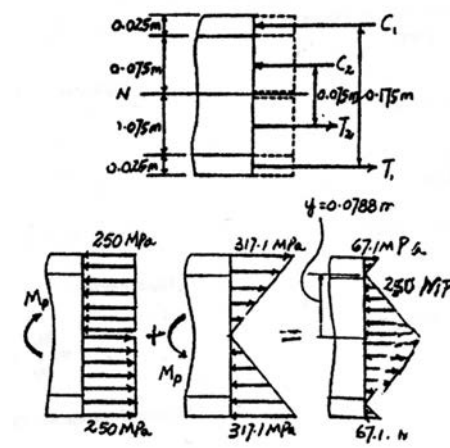

$$I = \frac{1}{12}(0.2)\left(0.2^3\right) - \frac{1}{12}(0.15)\left(0.15^3\right)$$

$$= 91.14583\left(10^{-6}\right) \text{ m}^4$$

$$\sigma_r = \frac{M_P\, c}{I} = \frac{289062.5\,(0.1)}{91.14583\left(10^{-6}\right)} = 317.41 \text{ MPa}$$

Residual Bending Stress: As shown on the diagram.

$$\sigma'_{\text{top}} = \sigma'_{\text{bot}} = \sigma_r - \sigma_Y$$

$$= 317.14 - 250 = 67.1 \text{ MPa}$$ **Ans.**

Ans:
$\sigma_{\text{top}} = \sigma_{\text{bottom}} = 67.1$ MPa

6–163. Determine the plastic moment $\mathbf{M}_p$ that can be supported by a beam having the cross section shown. $\sigma_Y = 30$ ksi.

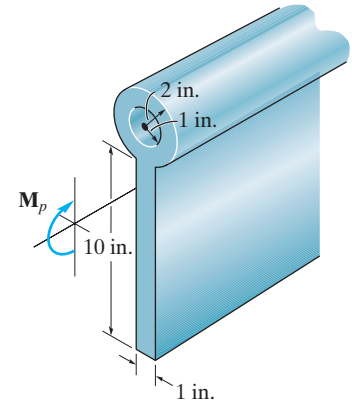

$$\int \sigma \, dA = 0$$

$$C_1 + C_2 - T_1 = 0$$

$$\pi(2^2 - 1^2)(30) + (10 - d)(1)(30) - d(1)(30) = 0$$

$$3\pi + 10 - 2d = 0$$

$$d = 9.7124 \text{ in.} < 10 \text{ in.}$$ OK

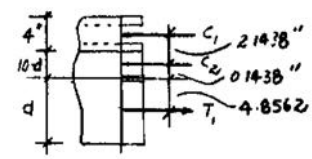

$$M_p = \pi(2^2 - 1^2)(30)(2.2876)$$

$$+ (0.2876)(1)(30)(0.1438)$$

$$+ (9.7124)(1)(30)(4.8562)$$

$$= 2063 \text{ kip} \cdot \text{in.}$$

$$= 172 \text{ kip} \cdot \text{ft}$$ **Ans.**

Ans:
$M_p = 172$ kip · ft

***6–164.** Determine the shape factor of the beam's cross section.

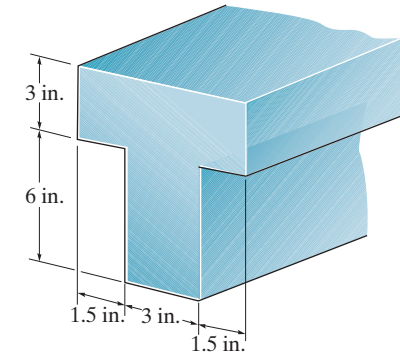

Referring to Fig. *a*, the location of centroid of the cross section is

$$\bar{y} = \frac{\Sigma \bar{y} A}{\Sigma A} = \frac{7.5(3)(6) + 3(6)(3)}{3(6) + 6(3)} = 5.25 \text{ in.}$$

The moment of inertia of the cross section about the neutral axis is

$$I = \frac{1}{12}(3)\left(6^3\right) + 3(6)(5.25 - 3)^2 + \frac{1}{12}(6)\left(3^3\right) + 6(3)(7.5 - 5.25)^2$$

$$= 249.75 \text{ in}^4$$

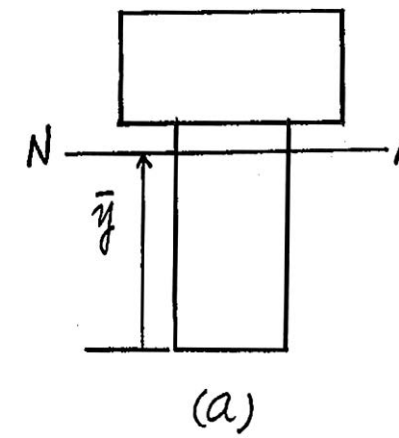

Here $\sigma_{\max} = \sigma_Y$ and $c = \bar{y} = 5.25$ in. Thus

$$\sigma_{\max} = \frac{Mc}{I}; \qquad \sigma_Y = \frac{M_Y(5.25)}{249.75}$$

$$M_Y = 47.571\sigma_Y$$

Referring to the stress block shown in Fig. *b*,

$$\int_A \sigma dA = 0; \qquad T - C_1 - C_2 = 0$$

$$d(3)\sigma_Y - (6 - d)(3)\sigma_Y - 3(6)\sigma_Y = 0$$

$$d = 6 \text{ in.}$$

Since $d = 6$ in., $C_1 = 0$, Fig. *c*. Here

$$T = C = 3(6)\,\sigma_Y = 18\,\sigma_Y$$

Thus,

$$M_P = T(4.5) = 18\,\sigma_Y\,(4.5) = 81\,\sigma_Y$$

Thus,

$$k = \frac{M_P}{M_Y} = \frac{81\,\sigma_Y}{47.571\,\sigma_Y} = 1.70 \qquad \textbf{Ans.}$$

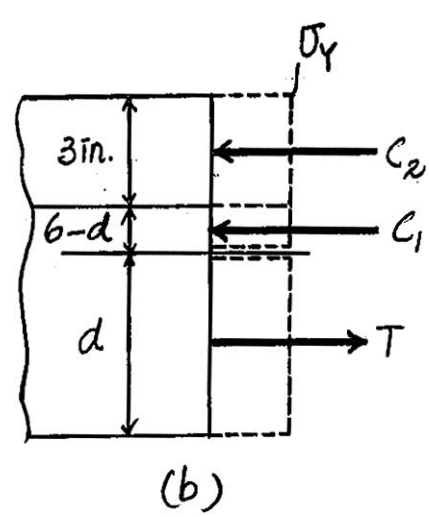

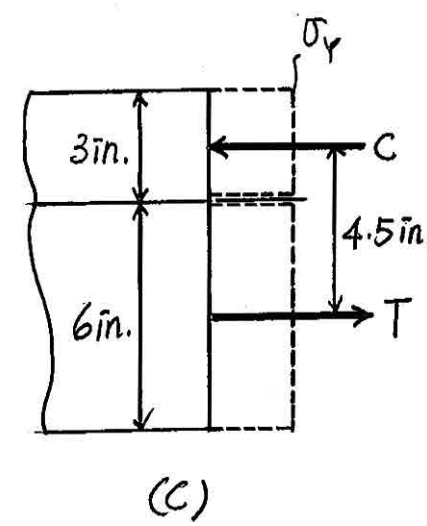

6–165. The beam is made of elastic-perfectly plastic material. Determine the maximum elastic moment and the plastic moment that can be applied to the cross section. Take $\sigma_Y = 36$ ksi.

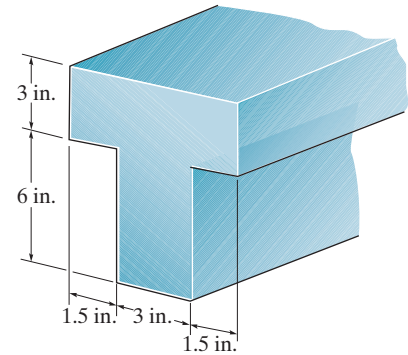

Referring to Fig. *a*, the location of centroid of the cross section is

$$\bar{y} = \frac{\Sigma \bar{y} A}{\Sigma A} = \frac{7.5(3)(6) + 3(6)(3)}{3(6) + 6(3)} = 5.25 \text{ in.}$$

The moment of inertia of the cross-section about the neutral axis is

$$I = \frac{1}{12}(3)(6^3) + 3(6)(5.25 - 3)^2 + \frac{1}{12}(6)(3^3) + 6(3)(7.5 - 5.25)^2$$

$$= 249.75 \text{ in}^4$$

Here, $\sigma_{\max} = \sigma_Y = 36$ ksi and $\mathcal{C} = \bar{y} = 5.25$ in. Then

$$\sigma_{\max} = \frac{Mc}{I}; \qquad 36 = \frac{M_Y(5.25)}{249.75}$$

$$M_Y = 1712.57 \text{ kip} \cdot \text{in} = 143 \text{ kip} \cdot \text{ft} \qquad \textbf{Ans.}$$

Referring to the stress block shown in Fig. *b*,

$$\int_A \sigma dA = 0; \qquad T - C_1 - C_2 = 0$$

$$d\cancel{(3)}\cancel{(36)} - (6 - d)(3)(36) - \cancel{3}(6)\cancel{(36)} = 0$$

$$d = 6 \text{ in.}$$

Since $d = 6$ in., $\mathcal{C}_1 = 0$,

Here,

$$T = C = 3(6)(36) = 648 \text{ kip}$$

Thus,

$$M_P = T(4.5) = 648(4.5) = 2916 \text{ kip} \cdot \text{in} = 243 \text{ kip} \cdot \text{ft} \qquad \textbf{Ans.}$$

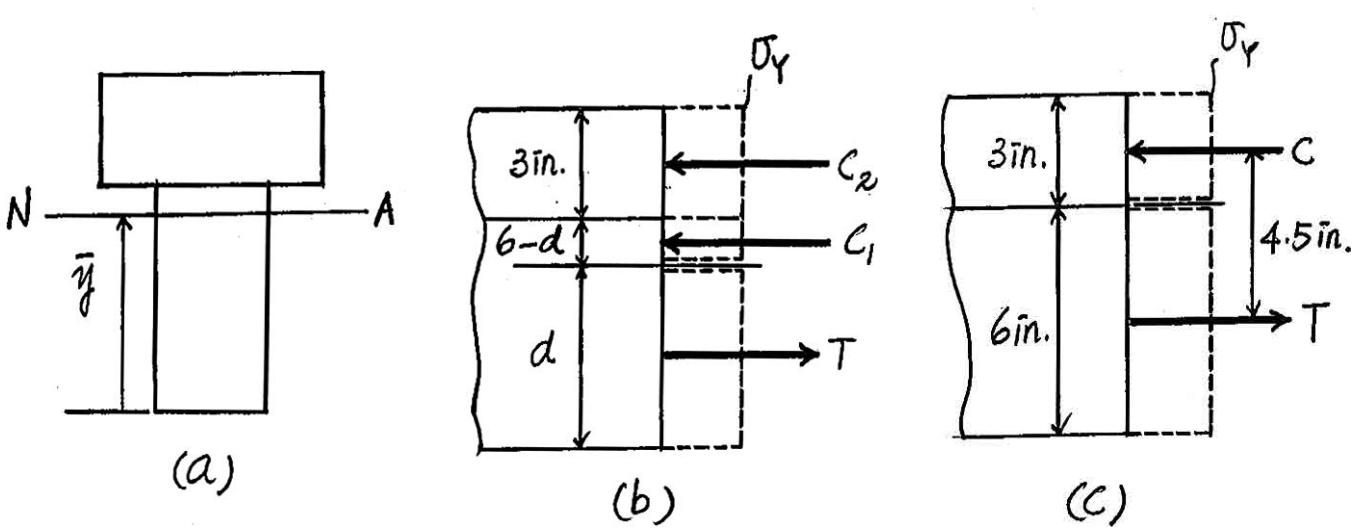

Ans:
$M_Y = 143$ kip · ft, $M_P = 243$ kip · ft

6–166. Determine the shape factor for the cross section of the beam.

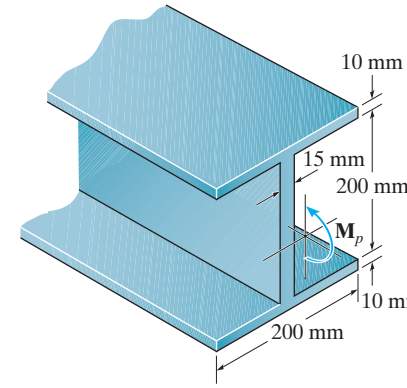

$$I = \frac{1}{12}(0.2)(0.22)^3 - \frac{1}{12}(0.185)(0.2)^3 = 54.133(10^{-6})\ \text{m}^4$$

$$C_1 = \sigma_Y(0.01)(0.2) = (0.002)\,\sigma_Y$$

$$C_2 = \sigma_Y(0.1)(0.015) = (0.0015)\,\sigma_Y$$

$$M_p = 0.002\,\sigma_Y(0.21) + 0.0015\,\sigma_Y(0.1) = 0.0005\,\sigma_Y$$

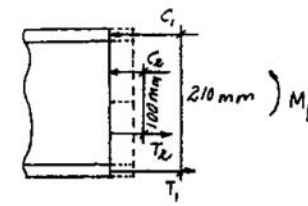

$$\sigma_Y = \frac{M_Y c}{I}$$

$$M_Y = \frac{\sigma_Y(54.133)(10^{-6})}{0.11} = 0.000492\,\sigma_Y$$

$$k = \frac{M_p}{M_Y} = \frac{0.00057\,\sigma_Y}{0.000492\,\sigma_Y} = 1.16$$ **Ans.**

Ans:
$k = 1.16$

6–167. The beam is made of an elastic-plastic material for which $\sigma_Y = 200$ MPa. If the largest moment in the beam occurs within the center section $a-a$, determine the magnitude of each force **P** that causes this moment to be (a) the largest elastic moment and (b) the largest plastic moment.

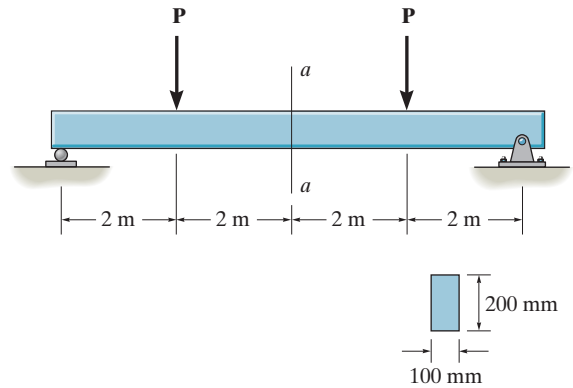

$$M = 2P \qquad (1)$$

a) Elastic moment

$$I = \frac{1}{12}(0.1)(0.2^3) = 66.667(10^{-6})\ \text{m}^4$$

$$\sigma_Y = \frac{M_Y c}{I}$$

$$M_Y = \frac{200(10^6)(66.667)(10^{-6})}{0.1}$$

$$= 133.33\ \text{kN}\cdot\text{m}$$

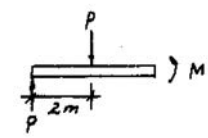

From Eq. (1)

$$133.33 = 2P$$

$$P = 66.7\ \text{kN} \qquad \textbf{Ans.}$$

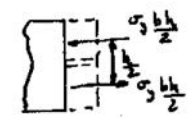

b) Plastic moment

$$M_p = \frac{b\,h^2}{4}\sigma_Y$$

$$= \frac{0.1(0.2^2)}{4}(200)(10^6)$$

$$= 200\ \text{kN}\cdot\text{m}$$

From Eq. (1)

$$200 = 2P$$

$$P = 100\ \text{kN} \qquad \textbf{Ans.}$$

Ans:
Elastic: $P = 66.7$ kN,
Plastic: $P = 100$ kN

***6–168.** Determine the shape factor of the cross section.

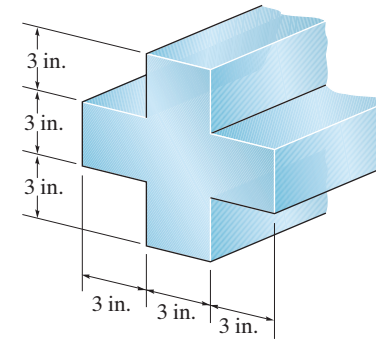

The moment of inertia of the cross section about the neutral axis is

$$I = \frac{1}{12}(3)(9^3) + \frac{1}{12}(6)(3^3) = 195.75 \text{ in}^4$$

Here, $\sigma_{\max} = \sigma_Y$ and $c = 4.5$ in. Then

$$\sigma_{\max} = \frac{Mc}{I}; \qquad \sigma_Y = \frac{M_Y(4.5)}{195.75}$$

$$M_Y = 43.5\,\sigma_Y$$

Referring to the stress block shown in Fig. *a*,

$$T_1 = C_1 = 3(3)\sigma_Y = 9\,\sigma_Y$$

$$T_2 = C_2 = 1.5(9)\sigma_Y = 13.5\,\sigma_Y$$

Thus,

$$M_P = T_1(6) + T_2(1.5)$$

$$= 9\sigma_Y(6) + 13.5\sigma_Y(1.5) = 74.25\,\sigma_Y$$

$$k = \frac{M_P}{M_Y} = \frac{74.25\,\sigma_Y}{43.5\,\sigma_Y} = 1.71 \qquad \textbf{Ans.}$$

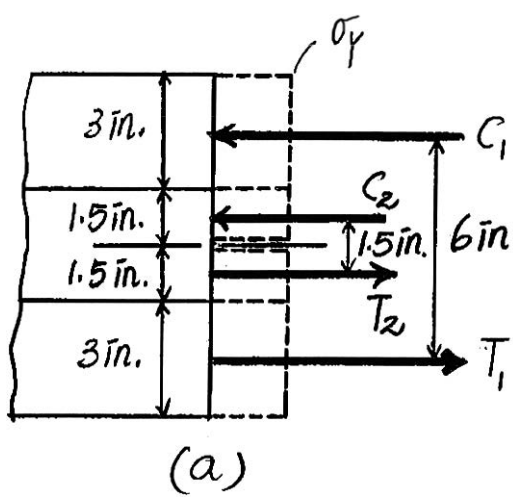

(a)

***6–169.** The beam is made of elastic-perfectly plastic material. Determine the maximum elastic moment and the plastic moment that can be applied to the cross section. Take $\sigma_Y = 36$ ksi.

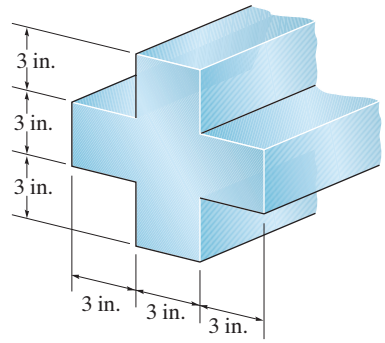

The moment of inertia of the cross section about the neutral axis is

$$I = \frac{1}{12}(3)(9^3) + \frac{1}{12}(6)(3^3) = 195.75 \text{ in}^4$$

Here, $\sigma_{\max} = \sigma_Y = 36$ ksi and $c = 4.5$ in. Then

$$\sigma_{\max} = \frac{Mc}{I}; \qquad 36 = \frac{M_Y(4.5)}{195.75}$$

$$M_Y = 1566 \text{ kip} \cdot \text{in} = 130.5 \text{ kip} \cdot \text{ft} \qquad \textbf{Ans.}$$

Referring to the stress block shown in Fig. *a*,

$$T_1 = C_1 = 3(3)(36) = 324 \text{ kip}$$

$$T_2 = C_2 = 1.5(9)(36) = 486 \text{ kip}$$

Thus,

$$M_p = T_1(6) + T_2(1.5)$$

$$= 324(6) + 486(1.5)$$

$$= 2673 \text{ kip} \cdot \text{in.} = 222.75 \text{ kip} \cdot \text{ft} = 223 \text{ kip} \cdot \text{ft} \qquad \textbf{Ans.}$$

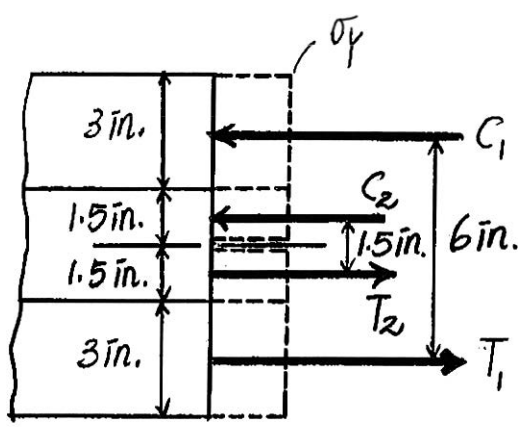

(a)

Ans:
$M_Y = 130.5$ kip · ft, $M_p = 223$ kip · ft

6–170. The box beam is made from an elastic-plastic material for which $\sigma_Y = 36$ ksi. Determine the magnitude of each concentrated force **P** that will cause the moment to be (a) the largest elastic moment and (b) the largest plastic moment.

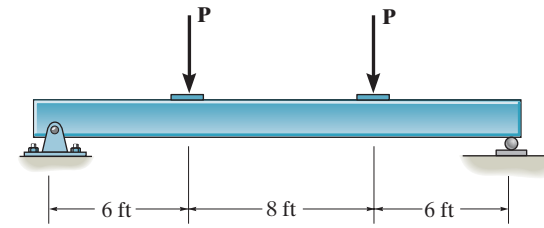

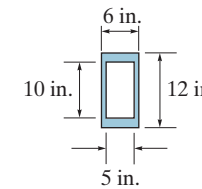

From the moment diagram shown in Fig. *a*, $M_{max} = 6\,P$.

The moment of inertia of the beam's cross section about the neutral axis is

$$I = \frac{1}{12}(6)(12^3) - \frac{1}{12}(5)(10^3) = 447.33 \text{ in}^4$$

Here, $\sigma_{max} = \sigma_Y = 36$ ksi and $c = 6$ in.

$$\sigma_{max} = \frac{Mc}{I}; \qquad 36 = \frac{M_Y(6)}{447.33}$$

$$M_Y = 2684 \text{ kip}\cdot\text{in} = 223.67 \text{ kip}\cdot\text{ft}$$

It is required that

$$M_{max} = M_Y$$

$$6P = 223.67$$

$$P = 37.28 \text{ kip} = 37.3 \text{ kip}$$ **Ans.**

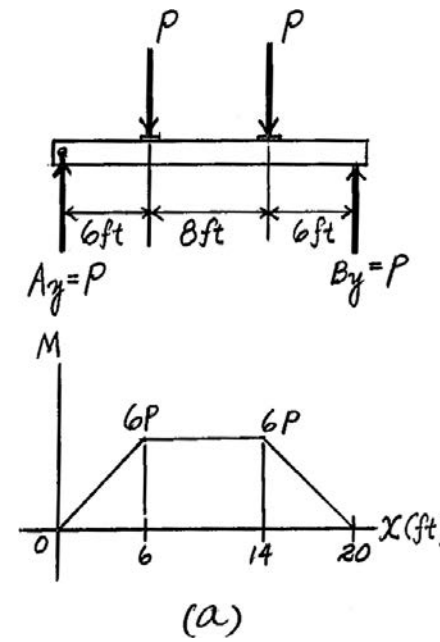

Referring to the stress block shown in Fig. *b*,

$$T_1 = C_1 = 6(1)(36) = 216 \text{ kip}$$

$$T_2 = C_2 = 5(1)(36) = 180 \text{ kip}$$

Thus,

$$M_p = T_1(11) + T_2(5)$$

$$= 216(11) + 180(5)$$

$$= 3276 \text{ kip}\cdot\text{in} = 273 \text{ kip}\cdot\text{ft}$$

It is required that

$$M_{max} = M_p$$

$$6P = 273$$

$$P = 45.5 \text{ kip}$$ **Ans.**

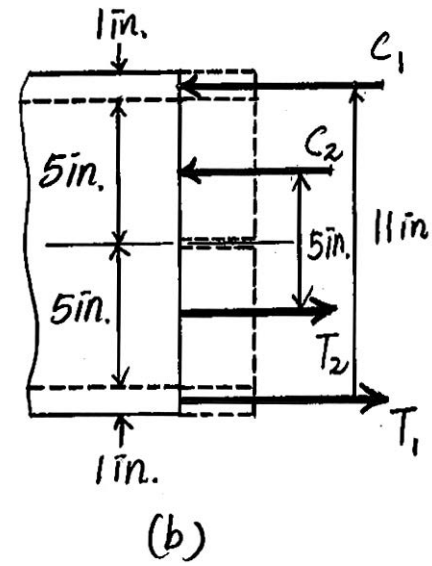

Ans:
Elastic: $P = 37.3$ kip,
Plastic: $P = 45.5$ kip

6–171. The beam is made from elastic-perfectly plastic material. Determine the shape factor for the thick-walled tube.

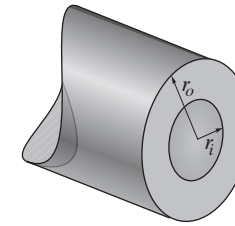

Maximum Elastic Moment. The moment of inertia of the cross section about the neutral axis is

$$I = \frac{\pi}{4}\left(r_o{}^4 - r_i^4\right)$$

With $c = r_o$ and $\sigma_{\max} = \sigma_Y$,

$$\sigma_{\max} = \frac{Mc}{I}; \qquad \sigma_Y = \frac{M_Y(r_o)}{\frac{\pi}{4}\left(r_o{}^4 - r_i{}^4\right)}$$

$$M_Y = \frac{\pi}{4r_o}\left(r_o{}^4 - r_i{}^4\right)\sigma_Y$$

Plastic Moment. The plastic moment of the cross section can be determined by superimposing the moment of the stress block of the solid beam with radius r_0 and r_i as shown in Fig. *a*, Referring to the stress block shown in Fig. *a*,

$$T_1 = C_1 = \frac{\pi}{2} r_o{}^2\sigma_Y$$

$$T_2 = C_2 = \frac{\pi}{2} r_i{}^2\sigma_Y$$

$$M_P = T_1\left[2\left(\frac{4r_o}{3\pi}\right)\right] - T_2\left[2\left(\frac{4r_i}{3\pi}\right)\right]$$

$$= \frac{\pi}{2} r_o{}^2\sigma_Y\left(\frac{8r_o}{3\pi}\right) - \frac{\pi}{2} r_i{}^2\sigma_Y\left(\frac{8r_i}{3\pi}\right)$$

$$= \frac{4}{3}\left(r_o{}^3 - r_i{}^3\right)\sigma_Y$$

Shape Factor.

$$k = \frac{M_P}{M_Y} = \frac{\frac{4}{3}\left(r_o{}^3 - r_i{}^3\right)\sigma_Y}{\frac{\pi}{4r_o}\left(r_o{}^4 - r_i{}^4\right)\sigma_Y} = \frac{16r_o\left(r_o{}^3 - r_i{}^3\right)}{3\pi\left(r_o{}^4 - r_i{}^4\right)} \qquad \textbf{Ans.}$$

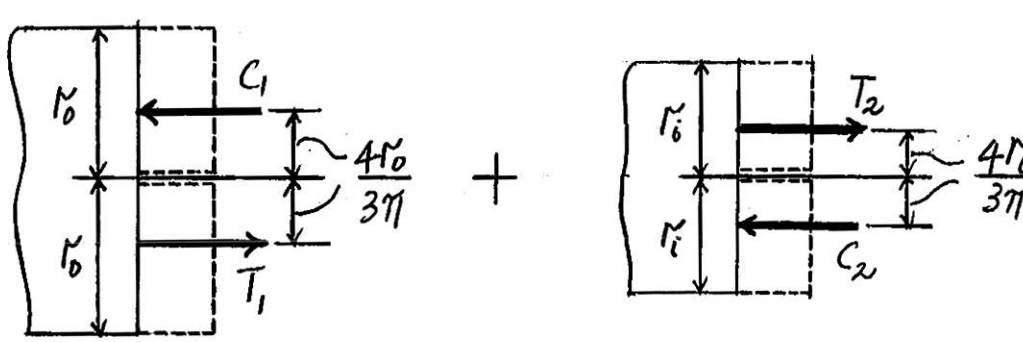

(a)

Ans:

$$k = \frac{16r_o\left(r_o^3 - r_i^3\right)}{3\pi\left(r_o^4 - r_i^4\right)}$$

***6–172.** Determine the shape factor for the member.

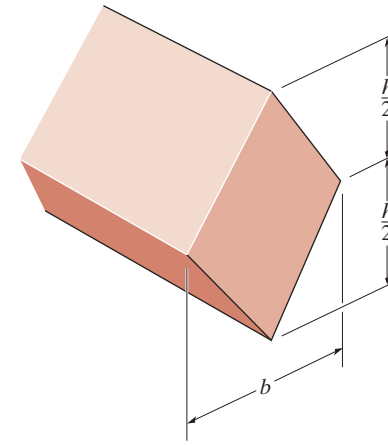

Plastic analysis:

$$T = C = \frac{1}{2}(b)\left(\frac{h}{2}\right)\sigma_Y = \frac{b\,h}{4}\sigma_Y$$

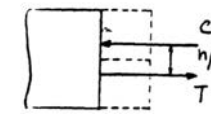

$$M_P = \frac{b\,h}{4}\sigma_Y\left(\frac{h}{3}\right) = \frac{b\,h^2}{12}\sigma_Y$$

Elastic analysis:

$$I = 2\left[\frac{1}{12}(b)\left(\frac{h}{2}\right)^3\right] = \frac{b\,h^3}{48}$$

$$M_Y = \frac{\sigma_Y I}{c} = \frac{\sigma_Y\left(\frac{bh^3}{48}\right)}{\frac{h}{2}} = \frac{b\,h^2}{24}\sigma_Y$$

Shape Factor:

$$k = \frac{M_p}{M_Y} = \frac{\frac{bh^2}{12}\sigma_Y}{\frac{bh^2}{24}\sigma_Y} = 2 \qquad \textbf{Ans.}$$

6–173. The member is made from an elastic-plastic material. Determine the maximum elastic moment and the plastic moment that can be applied to the cross section. Take $b = 4$ in., $h = 6$ in., $\sigma_Y = 36$ ksi.

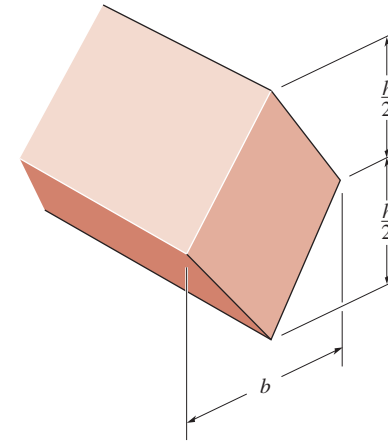

Elastic analysis:

$$I = 2\left[\frac{1}{12}(4)(3)^3\right] = 18 \text{ in}^4$$

$$M_Y = \frac{\sigma_Y I}{c} = \frac{36(18)}{3} = 216 \text{ kip}\cdot\text{in.} = 18 \text{ kip}\cdot\text{ft}$$ **Ans.**

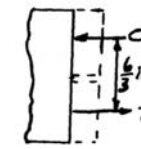

Plastic analysis:

$$T = C = \frac{1}{2}(4)(3)(36) = 216 \text{ kip}$$

$$M_p = 2160\left(\frac{6}{3}\right) = 432 \text{ kip}\cdot\text{in.} = 36 \text{ kip}\cdot\text{ft}$$ **Ans.**

Ans:
$M_Y = 18$ kip · ft,
$M_p = 36$ kip · ft

6–174. The beam is made of an elastic-plastic material for which $\sigma_Y = 30$ ksi. If the largest moment in the beam occurs at the center section $a-a$, determine the intensity of the distributed load w that causes this moment to be (a) the largest elastic moment and (b) the largest plastic moment.

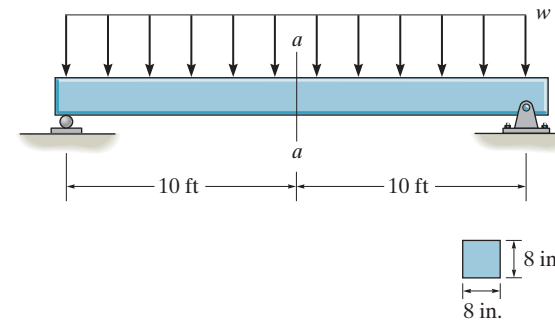

$$M = 50\,w \qquad (1)$$

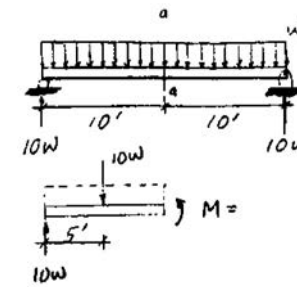

(a) Elastic moment

$$I = \frac{1}{12}(8)(8^3) = 341.33 \text{ in}^4$$

$$\sigma_Y = \frac{M_Y c}{I}$$

$$M_Y = \frac{30(341.33)}{4}$$

$$= 2560 \text{ kip}\cdot\text{in.} = 213.33 \text{ kip}\cdot\text{ft}$$

From Eq. (1),

$$213.33 = 50\,w$$

$$w = 4.27 \text{ kip/ft} \qquad \textbf{Ans.}$$

(b) Plastic moment

$$C = T = 30(8)(4) = 960 \text{ kip}$$

$$M_p = 960\,(4) = 3840 \text{ kip}\cdot\text{in.} = 320 \text{ kip}\cdot\text{ft}$$

From Eq. (1)

$$320 = 50\,w$$

$$w = 6.40 \text{ kip/ft} \qquad \textbf{Ans.}$$

Ans:
Elastic: $w = 4.27$ kip/ft,
Plastic: $w = 6.40$ kip/ft

6–175. The box beam is made from an elastic-plastic material for which $\sigma_Y = 25$ ksi. Determine the intensity of the distributed load w_0 that will cause the moment to be (a) the largest elastic moment and (b) the largest plastic moment.

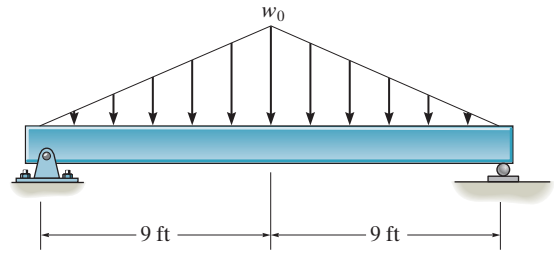

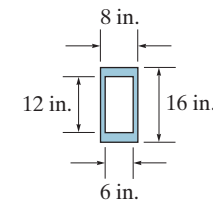

Elastic analysis:

$$I = \frac{1}{12}(8)(16^3) - \frac{1}{12}(6)(12^3) = 1866.67 \text{ in}^4$$

$$M_{\max} = \frac{\sigma_Y I}{c}; \qquad 27w_0(12) = \frac{25(1866.67)}{8}$$

$w_0 = 18.0$ kip/ft **Ans.**

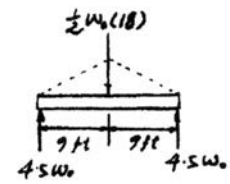

Plastic analysis:

$C_1 = T_1 = 25(8)(2) = 400$ kip

$C_2 = T_2 = 25(6)(2) = 300$ kip

$M_P = 400(14) + 300(6) = 7400$ kip · in.

$27w_0(12) = 7400$

$w_0 = 22.8$ kip/ft **Ans.**

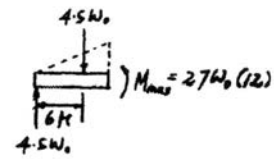

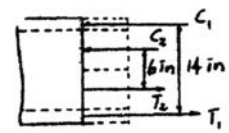

Ans:
Elastic: $w_0 = 18.0$ kip/ft,
Plastic: $w_0 = 22.8$ kip/ft

***6–176.** The wide-flange member is made from an elastic-plastic material. Determine the shape factor.

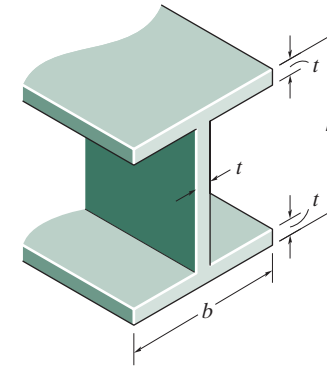

Plastic analysis:

$$T_1 = C_1 = \sigma_Y b\, t; \qquad T_2 = C_2 = \sigma_Y\left(\frac{h-2t}{2}\right)t$$

$$M_p = \sigma_Y\, b\, t(h-t) + \sigma_Y\left(\frac{h-2t}{2}\right)(t)\left(\frac{h-2t}{2}\right)$$

$$= \sigma_Y[b\, t(h-t) + \frac{t}{4}(h-2t)^2]$$

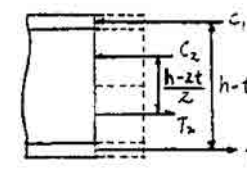

Elastic analysis:

$$I = \frac{1}{12}b\,h^3 - \frac{1}{12}(b-t)(h-2t)^3$$

$$= \frac{1}{12}[b\,h^3 - (b-t)(h-2t)^3]$$

$$M_Y = \frac{\sigma_Y I}{c} = \frac{\sigma_Y(\frac{1}{12})\,[bh^3 - (b-t)(h-2t)^3]}{\frac{h}{2}}$$

$$= \frac{bh^3 - (b-t)(h-2t)^3}{6h}\sigma_Y$$

Shape Factor:

$$k = \frac{M_p}{M_Y} = \frac{[b\,t(h-t) + \frac{1}{4}(h-2t)^2]\sigma_Y}{\frac{bh^3 - (b-t)(h-2t)^3}{6\,h}\sigma_Y}$$

$$= \frac{3h}{2}\left[\frac{4b\,t(h-t) + t(h-2t)^2}{b\,h^3 - (b-t)(h-2t)^3}\right] \qquad \textbf{Ans.}$$

***6–177.** The beam is made of a polyester that has the stress–strain curve shown. If the curve can be represented by the equation $\sigma = [20 \tan^{-1}(15\epsilon)]$ ksi, where $\tan^{-1}(15\epsilon)$ is in radians, determine the magnitude of the force **P** that can be applied to the beam without causing the maximum strain in its fibers at the critical section to exceed $\epsilon_{max} = 0.003$ in./in.

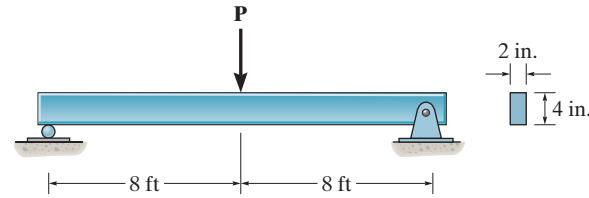

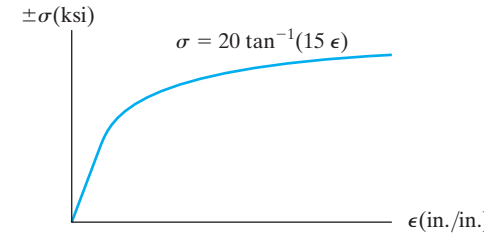

Maximum Internal Moment: The maximum internal moment $M = 4.00P$ occurs at the mid span as shown on FBD.

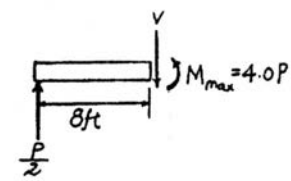

Stress–Strain Relationship: Using the stress–strain relationship. the bending stress can be expressed in terms of y using $\epsilon = 0.0015y$.

$$\sigma = 20 \tan^{-1}(15\epsilon)$$

$$= 20 \tan^{-1}[15(0.0015y)]$$

$$= 20 \tan^{-1}(0.0225y)$$

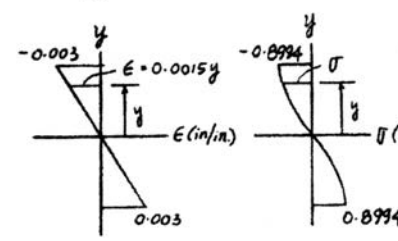

When $\epsilon_{max} = 0.003$ in./in., $y = 2$ in. and $\sigma_{max} = 0.8994$ ksi

Resultant Internal Moment: The resultant internal moment M can be evaluated from the integal $\int_A y\sigma dA$.

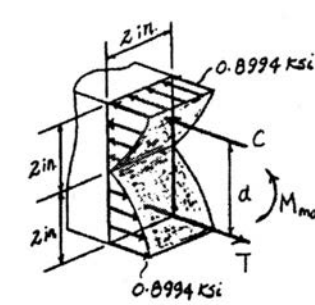

$$M = 2\int_A y\sigma dA$$

$$= 2\int_0^{2\text{ in}} y\left[20 \tan^{-1}(0.0225y)\right](2dy)$$

$$= 80\int_0^{2\text{ in}} y \tan^{-1}(0.0225y)\, dy$$

$$= 80\left[\frac{1 + (0.0225)^2y^2}{2(0.0225)^2}\tan^{-1}(0.0225y) - \frac{y}{2(0.0225)}\right]\Bigg|_0^{2\text{ in.}}$$

$$= 4.798 \text{ kip}\cdot\text{in}$$

Equating

$$M = 4.00P(12) = 4.798$$

$$P = 0.100 \text{ kip} = 100 \text{ lb}$$ **Ans.**

Ans:
$P = 100$ lb

6–178. The plexiglass bar has a stress–strain curve that can be approximated by the straight-line segments shown. Determine the largest moment M that can be applied to the bar before it fails.

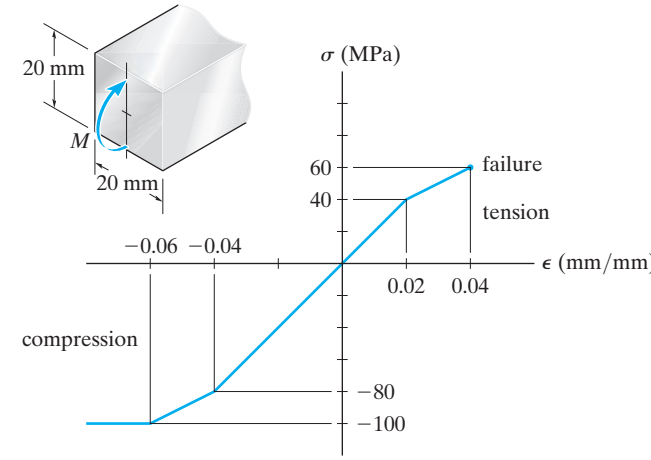

Ultimate Moment:

$$\int_A \sigma\, dA = 0; \qquad C - T_2 - T_1 = 0$$

$$\sigma\left[\frac{1}{2}(0.02 - d)(0.02)\right] - 40\left(10^6\right)\left[\frac{1}{2}\left(\frac{d}{2}\right)(0.02)\right] - \frac{1}{2}(60 + 40)\left(10^6\right)\left[(0.02)\frac{d}{2}\right] = 0$$

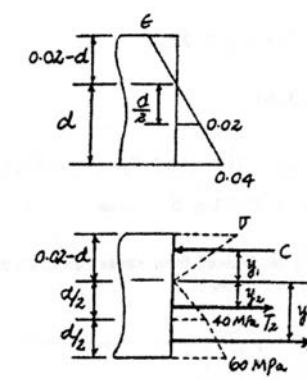

Since $\dfrac{0.04}{d} = \dfrac{\epsilon}{0.02 - d}$, then $0.02 - d = 25\epsilon d$.

And since $\dfrac{\sigma}{\epsilon} = \dfrac{40(10^6)}{0.02} = 2(10^9)$, then $\epsilon = \dfrac{\sigma}{2(10^9)}$.

So then $0.02 - d = \dfrac{23\sigma d}{2(10^9)} = 1.25(10^{-8})\sigma d$.

Substituting for $0.02 - d$, then solving for σ, yields $\sigma = 74.833$ MPa. Then $\epsilon = 0.037417$ mm/mm and $d = 0.010334$ m.

Therefore,

$$C = 74.833\left(10^6\right)\left[\frac{1}{2}(0.02 - 0.010334)(0.02)\right] = 7233.59 \text{ N}$$

$$T_1 = \frac{1}{2}(60 + 40)\left(10^6\right)\left[(0.02)\left(\frac{0.010334}{2}\right)\right] = 5166.85 \text{ N}$$

$$T_2 = 40\left(10^6\right)\left[\frac{1}{2}(0.02)\left(\frac{0.010334}{2}\right)\right] = 2066.74 \text{ N}$$

$$y_1 = \frac{2}{3}(0.02 - 0.010334) = 0.0064442 \text{ m}$$

$$y_2 = \frac{2}{3}\left(\frac{0.010334}{2}\right) = 0.0034445 \text{ m}$$

$$y_3 = \frac{0.010334}{2} + \left[1 - \frac{1}{3}\left(\frac{2(40) + 60}{40 + 60}\right)\right]\left(\frac{0.010334}{2}\right) = 0.0079225\text{m}$$

$$M = 7233.59(0.0064442) + 2066.74(0.0034445) + 5166.85(0.0079255)$$

$$= 94.7 \text{ N} \cdot \text{m} \qquad \textbf{Ans.}$$

Ans:
$M = 94.7 \text{ N} \cdot \text{m}$

6–179. The stress–strain diagram for a titanium alloy can be approximated by the two straight lines. If a strut made of this material is subjected to bending, determine the moment resisted by the strut if the maximum stress reaches a value of (a) σ_A and (b) σ_B.

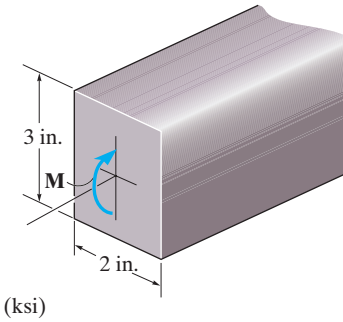

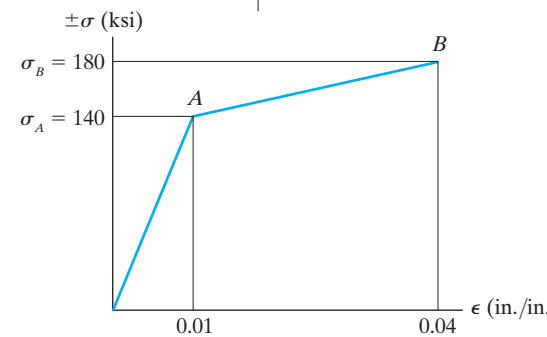

a) Maximum Elastic Moment: Since the stress is linearly related to strain up to point A, the flexure formula can be applied.

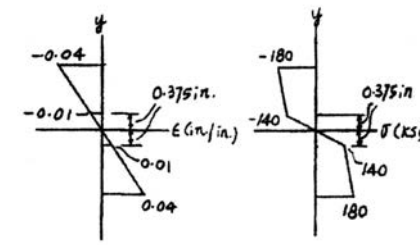

$$\sigma_A = \frac{Mc}{I}$$

$$M = \frac{\sigma_A I}{c}$$

$$= \frac{140\left[\frac{1}{12}(2)(3^3)\right]}{1.5}$$

$$= 420 \text{ kip} \cdot \text{in} = 35.0 \text{ kip} \cdot \text{ft}$$ **Ans.**

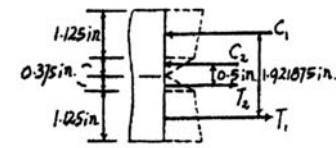

b) The Ultimate Moment:

$$C_1 = T_1 = \frac{1}{2}(140 + 180)(1.125)(2) = 360 \text{ kip}$$

$$C_2 = T_2 = \frac{1}{2}(140)(0.375)(2) = 52.5 \text{ kip}$$

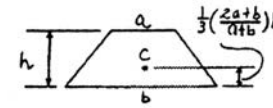

$$M = 360(1.921875) + 52.5(0.5)$$

$$= 718.125 \text{ kip} \cdot \text{in} = 59.8 \text{ kip} \cdot \text{ft}$$ **Ans.**

Note: The centroid of a trapezoidal area was used in calculation of moment.

Ans:
Maximum elastic moment: $M = 35.0$ kip · ft,
Ultimate moment: $M = 59.8$ kip · ft

***6–180.** A beam is made from polypropylene plastic and has a stress–strain diagram that can be approximated by the curve shown. If the beam is subjected to a maximum tensile and compressive strain of $\epsilon = 0.02$ mm/mm, determine the maximum moment M.

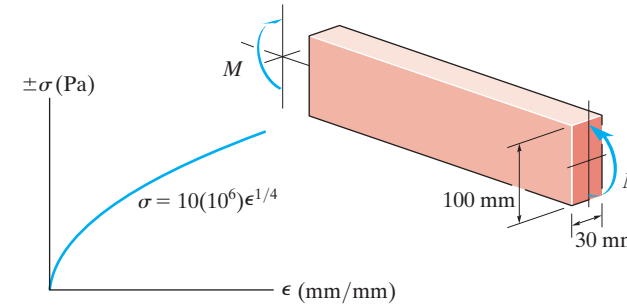

$$\epsilon_{max} = 0.02$$

$$\sigma_{max} = 10\left(10^6\right)(0.02)^{1/4} = 3.761 \text{ MPa}$$

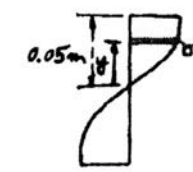

$$\frac{0.02}{0.05} = \frac{\epsilon}{y}$$

$$\epsilon = 0.4\, y$$

$$\sigma = 10\left(10^6\right)(0.4)^{1/4} y^{1/4}$$

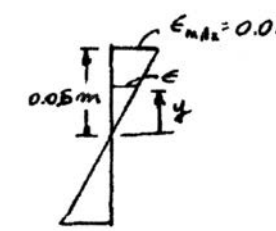

$$M = \int_A y\,\sigma\, dA = 2\int_0^{0.05} y(7.9527)\left(10^6\right) y^{1/4}(0.03)\,dy$$

$$M = 0.47716\left(10^6\right)\int_0^{0.05} y^{5/4} dy = 0.47716\left(10^6\right)\left(\frac{4}{9}\right)(0.05)^{9/4}$$

$$M = 251 \text{ N}\cdot\text{m}$$ **Ans.**

6–181. The bar is made of an aluminum alloy having a stress–strain diagram that can be approximated by the straight line segments shown. Assuming that this diagram is the same for both tension and compression, determine the moment the bar will support if the maximum strain at the top and bottom fibers of the beam is $\epsilon_{max} = 0.03$.

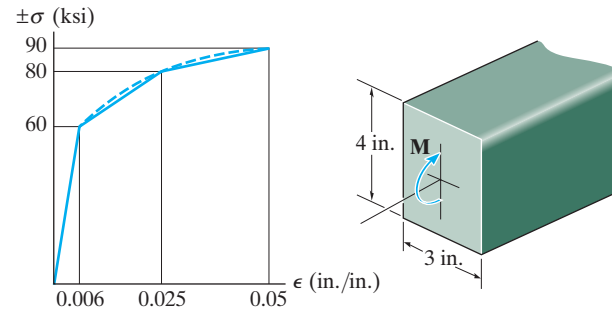

$$\frac{\sigma - 80}{0.03 - 0.025} = \frac{90 - 80}{0.05 - 0.025}; \qquad \sigma = 82 \text{ ksi}$$

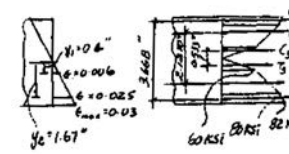

$$C_1 = T_1 = \frac{1}{2}(0.3333)(80 + 82)(3) = 81 \text{ kip}$$

$$C_2 = T_2 = \frac{1}{2}(1.2667)(60 + 80)(3) = 266 \text{ kip}$$

$$C_3 = T_3 = \frac{1}{2}(0.4)(60)(3) = 36 \text{ kip}$$

$$M = 81(3.6680) + 266(2.1270) + 36(0.5333)$$

$$= 882.09 \text{ kip} \cdot \text{in.} = 73.5 \text{ kip} \cdot \text{ft}$$ **Ans.**

Note: The centroid of a trapezoidal area was used in calculation of moment areas.

Ans:
$M = 73.5 \text{ kip} \cdot \text{ft}$

6–182. The bar is made of an aluminum alloy having a stress–strain diagram that can be approximated by the straight line segments shown. Assuming that this diagram is the same for both tension and compression, determine the moment the bar will support if the maximum strain at the top and bottom fibers of the beam is $\epsilon_{max} = 0.05$.

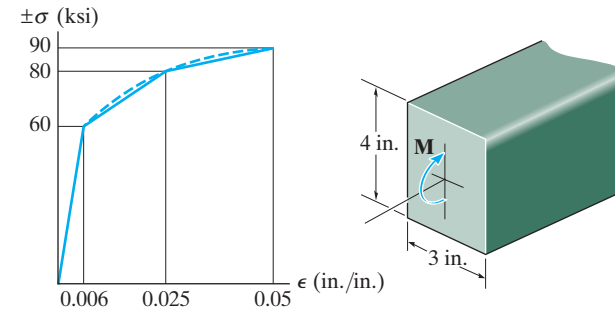

$$\sigma_1 = \frac{60}{0.006}\epsilon = 10(10^3)\epsilon$$

$$\frac{\sigma_2 - 60}{\epsilon - 0.006} = \frac{80 - 60}{0.025 - 0.006}$$

$$\sigma_2 = 1052.63\epsilon + 53.684$$

$$\frac{\sigma_3 - 80}{\epsilon - 0.025} = \frac{90 - 80}{0.05 - 0.025}; \qquad \sigma_3 = 400\epsilon + 70$$

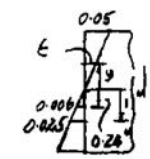

$$\epsilon = \frac{0.05}{2}(y) = 0.025y$$

Substitute ϵ into σ expression:

$\sigma_1 = 250y \qquad 0 \le y < 0.24$ in.

$\sigma_2 = 26.315y + 53.684 \qquad 0.24 < y < 1$ in.

$\sigma_3 = 10y + 70 \qquad 1$ in. $< y \le 2$ in.

$$dM = y\sigma\, dA = y\sigma(3\, dy)$$

$$M = 2[3\int_0^{0.24} 250y^2\, dy + 3\int_{0.24}^{1}(26.315y^2 + 53.684y)\, dy + 3\int_1^2(10y^2 + 70y)\, dy]$$

$$= 980.588 \text{ kip}\cdot\text{in.} = 81.7 \text{ kip}\cdot\text{ft}$$ **Ans.**

Also, the solution can be obtained from stress blocks as in Prob. 6–181.

Ans:
$M = 81.7$ kip · ft

6–183. Determine the shape factor for the wide-flange beam.

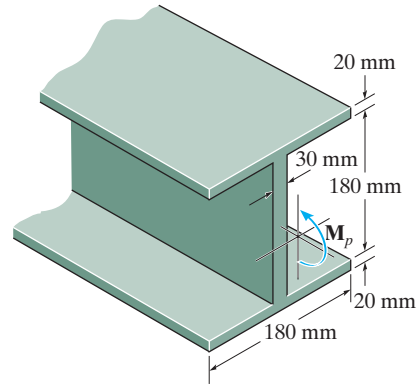

$$I = \frac{1}{12}(0.18)(0.22^3) - \frac{1}{12}(0.15)(0.18^3)$$

$$= 86.82(10^{-6})\ \text{m}^4$$

Plastic moment:

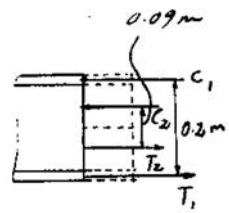

$$M_p = \sigma_Y(0.18)(0.02)(0.2) + \sigma_Y(0.09)(0.03)(0.09)$$

$$= 0.963(10^{-3})\sigma_Y$$

Shape Factor:

$$M_Y = \frac{\sigma_Y I}{c} = \frac{\sigma_Y(86.82)(10^{-6})}{0.11} = 0.789273(10^{-3})\sigma_Y$$

$$k = \frac{M_p}{M_Y} = \frac{0.963(10^{-3})\sigma_Y}{0.789273(10^{-3})\sigma_Y} = 1.22$$ **Ans.**

Ans:
$k = 1.22$

***6–184.** The beam is made of an elastic-plastic material for which $\sigma_Y = 250$ MPa. Determine the residual stress in the beam at its top and bottom after the plastic moment $\mathbf{M}_p$ is applied and then released.

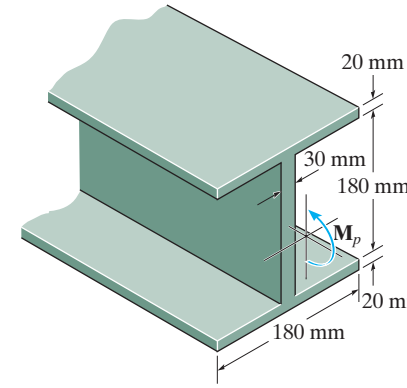

$$I = \frac{1}{12}(0.18)(0.22^3) - \frac{1}{12}(0.15)(0.18^3)$$

$$= 86.82(10^{-6})\ \text{m}^4$$

Plastic moment:

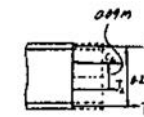

$$M_p = 250(10^6)(0.18)(0.02)(0.2) + 250(10^6)(0.09)(0.03)(0.09)$$

$$= 240750\ \text{N}\cdot\text{m}$$

Applying a reverse $M_p = 240750\ \text{N}\cdot\text{m}$

$$\sigma_p = \frac{M_p c}{I} = \frac{240750(0.11)}{86.82(10^{-6})} = 305.03\ \text{MPa}$$

$$\sigma'_{\text{top}} = \sigma'_{\text{bottom}} = 305 - 250 = 55.0\ \text{MPa}$$ **Ans.**

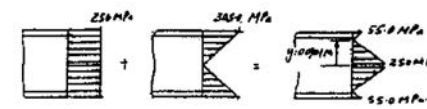

6–185. The compound beam consists of two segments that are pinned together at B. Draw the shear and moment diagrams if it supports the distributed loading shown.

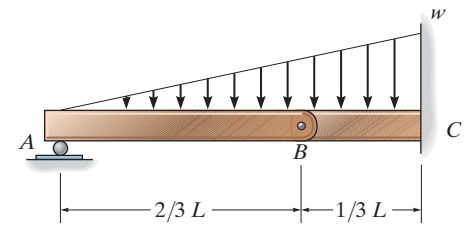

$$+\uparrow \Sigma F_y = 0; \qquad \frac{2wL}{27} - \frac{1}{2}\frac{w}{L}x^2 = 0$$

$$x = \sqrt{\frac{4}{27}}\,L = 0.385\,L$$

$$\circlearrowleft + \Sigma M = 0; \qquad M + \frac{1}{2}\frac{w}{L}(0.385L)^2\left(\frac{1}{3}\right)(0.385L) - \frac{2wL}{27}(0.385L) = 0$$

$$M = 0.0190\,wL^2$$

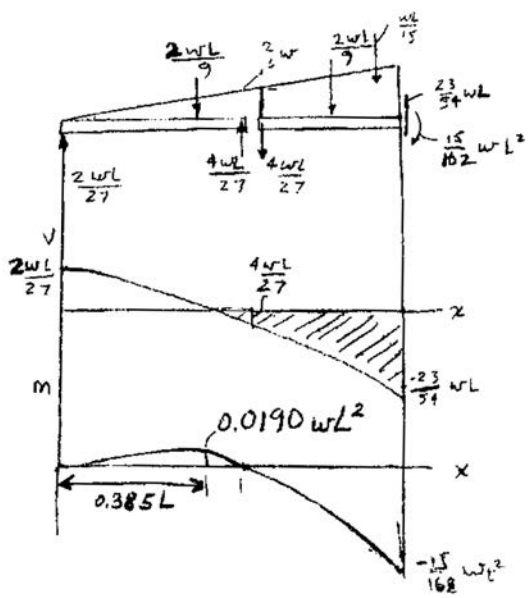

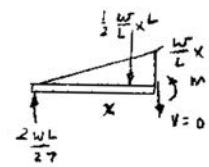

6–186. The composite beam consists of a wood core and two plates of steel. If the allowable bending stress for the wood is $(\sigma_{allow})_w = 20$ MPa, and for the steel $(\sigma_{allow})_{st} = 130$ MPa, determine the maximum moment that can be applied to the beam. $E_w = 11$ GPa, $E_{st} = 200$ GPa.

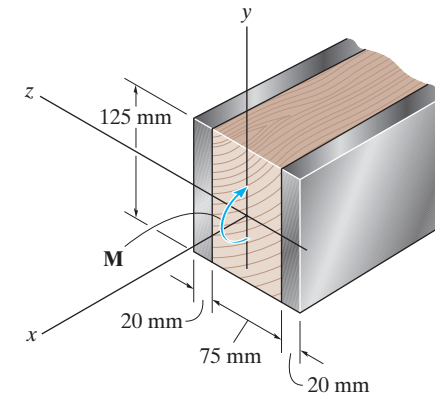

$$n = \frac{E_{st}}{E_w} = \frac{200(10^9)}{11(10^9)} = 18.182$$

$$I = \frac{1}{12}(0.80227)(0.125^3) = 0.130578(10^{-3})\text{m}^4$$

Failure of wood :

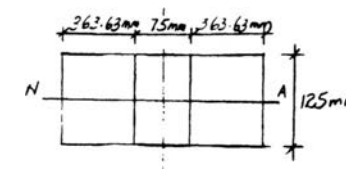

$$(\sigma_w)_{max} = \frac{Mc}{I}$$

$$20(10^6) = \frac{M(0.0625)}{0.130578(10^{-3})}; \qquad M = 41.8 \text{ kN}\cdot\text{m}$$

Failure of steel :

$$(\sigma_{st})_{max} = \frac{nMc}{I}$$

$$130(10^6) = \frac{18.182(M)(0.0625)}{0.130578(10^{-3})}$$

$$M = 14.9 \text{ kN}\cdot\text{m} \quad \text{(controls)}$$ **Ans.**

Ans:
$M = 14.9$ kN · m

6–187. Solve Prob. 6–186 if the moment is applied about the y axis instead of the z axis as shown.

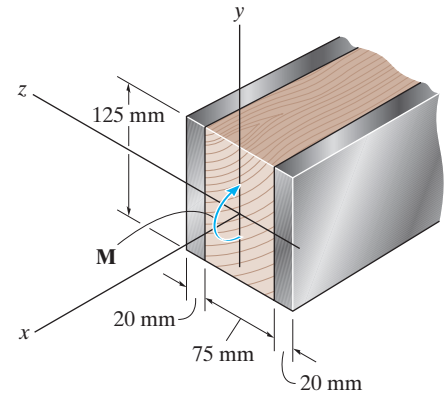

$$n = \frac{11(10^9)}{200(10^4)} = 0.055$$

$$I = \frac{1}{12}(0.125)(0.115^3) - \frac{1}{12}(0.118125)(0.075^3) = 11.689616(10^{-6})$$

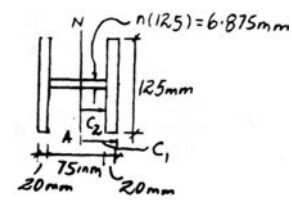

Failure of wood :

$$(\sigma_w)_{max} = \frac{nMc_2}{I}$$

$$20(10^6) = \frac{0.055(M)(0.0375)}{11.689616(10^{-6})}; \qquad M = 113 \text{ kN} \cdot \text{m}$$

Failure of steel :

$$(\sigma_{st})_{max} = \frac{Mc_1}{I}$$

$$130(10^6) = \frac{M(0.0575)}{11.689616(10^{-6})}$$

$$M = 26.4 \text{ kN} \cdot \text{m} \quad \text{(controls)}$$ **Ans.**

Ans:
$M = 26.4 \text{ kN} \cdot \text{m}$

***6–188.** A shaft is made of a polymer having a parabolic upper and lower cross section. If it resists an internal moment of $M = 125\ \text{N}\cdot\text{m}$, determine the maximum bending stress developed in the material (a) using the flexure formula and (b) using integration. Sketch a three-dimensional view of the stress distribution acting over the cross-sectional area. *Hint:* The moment of inertia is determined using Eq. A–3 of Appendix A.

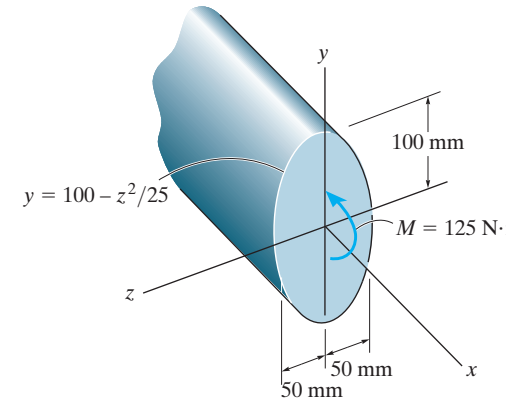

Maximum Bending Stress: The moment of inertia about y axis must be determined first in order to use flexure formula

$$I = \int_A y^2\, dA$$

$$= 2\int_0^{100\text{ mm}} y^2\,(2z)\, dy$$

$$= 20\int_0^{100\text{ mm}} y^2\sqrt{100 - y}\, dy$$

$$= 20\left[-\frac{3}{2}y^2(100 - y)^{\frac{3}{2}} - \frac{8}{15}y(100 - y)^{\frac{5}{2}} - \frac{16}{105}(100 - y)^{\frac{7}{2}}\right]\Bigg|_0^{100\text{ mm}}$$

$$= 30.4762\left(10^6\right)\text{mm}^4 = 30.4762\left(10^{-6}\right)\text{m}^4$$

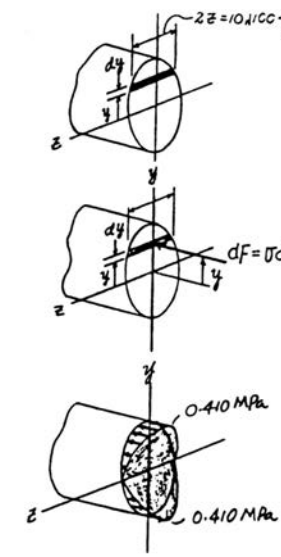

Thus,

$$\sigma_{\max} = \frac{Mc}{I} = \frac{125(0.1)}{30.4762(10^{-6})} = 0.410\text{ MPa} \qquad \textbf{Ans.}$$

Maximum Bending Stress: Using integration

$$dM = 2[y(\sigma\, dA)] = 2\left\{y\left[\left(\frac{\sigma_{\max}}{100}\right)y\right](2z\, dy)\right\}$$

$$M = \frac{\sigma_{\max}}{5}\int_0^{100\text{ mm}} y^2\sqrt{100 - y}\, dy$$

$$125\left(10^3\right) = \frac{\sigma_{\max}}{5}\left[-\frac{3}{2}y^2(100 - y)^{\frac{3}{2}} - \frac{8}{15}y(100 - y)^{\frac{5}{2}} - \frac{16}{105}(100 - y)^{\frac{7}{2}}\right]\Bigg|_0^{100\text{ mm}}$$

$$125\left(10^3\right) = \frac{\sigma_{\max}}{5}(1.5238)\left(10^6\right)$$

$$\sigma_{\max} = 0.410\text{ N/mm}^2 = 0.410\text{ MPa} \qquad \textbf{Ans.}$$

6–189. Determine the maximum bending stress in the handle of the cable cutter at section *a–a*. A force of 45 lb is applied to the handles. The cross-sectional area is shown in the figure.

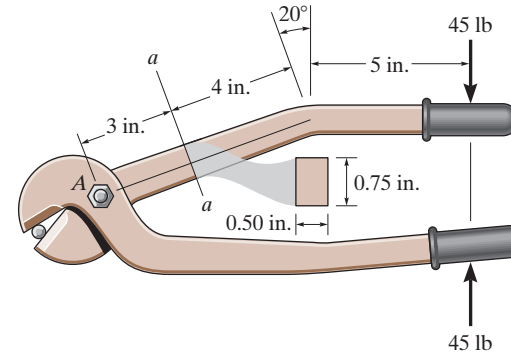

$\circlearrowleft + \Sigma M = 0; \qquad M - 45(5 + 4\cos 20°) = 0$

$M = 394.14 \text{ lb} \cdot \text{in.}$

$$\sigma_{\max} = \frac{Mc}{I} = \frac{394.14(0.375)}{\frac{1}{12}(0.5)(0.75^3)} = 8.41 \text{ ksi}$$ **Ans.**

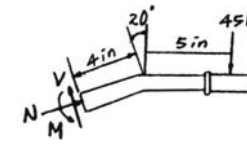

Ans:
$\sigma_{\max} = 8.41$ ksi

6–190. The curved beam is subjected to a bending moment of $M = 85\ \text{N}\cdot\text{m}$ as shown. Determine the stress at points A and B and show the stress on a volume element located at these points.

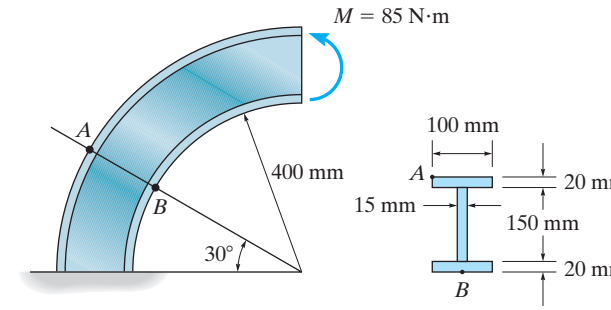

$$\int_A \frac{dA}{r} = b \ln \frac{r_2}{r_1} = 0.1 \ln \frac{0.42}{0.40} + 0.015 \ln \frac{0.57}{0.42} + 0.1 \ln \frac{0.59}{0.57}$$

$$= 0.012908358 \text{ m}$$

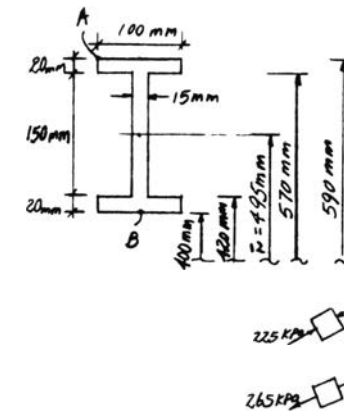

$$A = 2(0.1)(0.02) + (0.15)(0.015) = 6.25(10^{-3})\ \text{m}^2$$

$$R = \frac{A}{\int_A \frac{dA}{r}} = \frac{6.25(10^{-3})}{0.012908358} = 0.484182418 \text{ m}$$

$$\bar{r} - R = 0.495 - 0.484182418 = 0.010817581 \text{ m}$$

$$\sigma_A = \frac{M(R - r_A)}{A r_A(\bar{r} - R)} = \frac{85(0.484182418 - 0.59)}{6.25(10^{-3})(0.59)(0.010817581)} = -225.48 \text{ kPa}$$

$$\sigma_A = 225 \text{ kPa (C)}$$ **Ans.**

$$\sigma_B = \frac{M(R - r_B)}{A r_B(\bar{r} - R)} = \frac{85(0.484182418 - 0.40)}{6.25(10^{-3})(0.40)(0.010817581)} = 265 \text{ kPa (T)}$$ **Ans.**

Ans:
$\sigma_A = 225$ kPa (C), $\sigma_B = 265$ kPa (T)

6–191. Determine the shear and moment in the beam as functions of x, where $0 \leq x < 6$ ft, then draw the shear and moment diagrams for the beam.

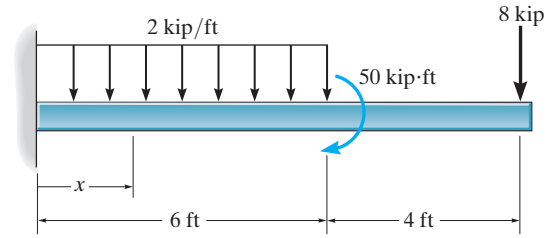

$+\uparrow \ \Sigma F_y = 0; \qquad 20 - 2x - V = 0$

$$V = 20 - 2x \qquad \textbf{Ans.}$$

$\circlearrowleft + \Sigma M_{NA} = 0; \qquad 20x - 166 - 2x\left(\frac{x}{2}\right) - M = 0$

$$M = -x^2 + 20x - 166 \qquad \textbf{Ans.}$$

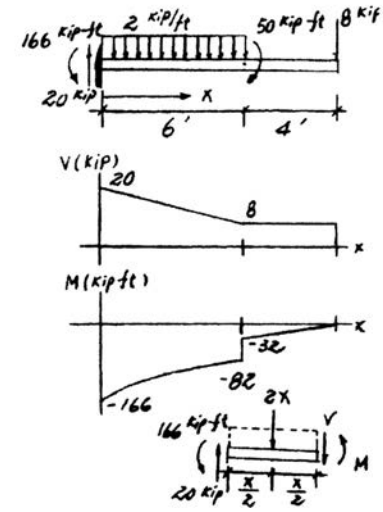

Ans:
$V = 20 - 2x$, $M = -x^2 + 20x - 166$

***6–192.** A wooden beam has a square cross section as shown. Determine which orientation of the beam provides the greatest strength at resisting the moment **M**. What is the difference in the resulting maximum stress in both cases?

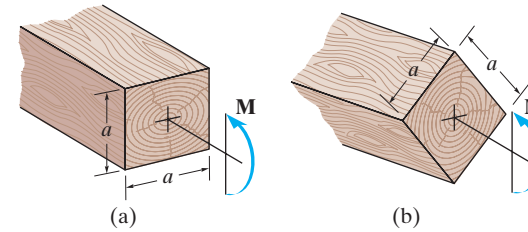

Case (a):

$$\sigma_{\max} = \frac{Mc}{I} = \frac{M(a/2)}{\frac{1}{12}(a)^4} = \frac{6M}{a^3}$$

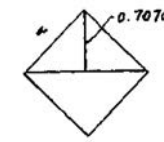

Case (b):

$$I = 2\left[\frac{1}{36}\left(\frac{2}{\sqrt{2}}a\right)\left(\frac{1}{\sqrt{2}}a\right)^3 + \frac{1}{2}\left(\frac{2}{\sqrt{2}}a\right)\left(\frac{1}{\sqrt{2}}a\right)\left[\left(\frac{1}{\sqrt{2}}a\right)\left(\frac{1}{3}\right)\right]^2\right] = 0.08333\,a^4$$

$$\sigma_{\max} = \frac{Mc}{I} = \frac{M\left(\frac{1}{\sqrt{2}}a\right)}{0.08333\,a^4} = \frac{8.4853\,M}{a^3}$$

Case (a) provides higher strength since the resulting maximum stress is less for a given M and a.

Case (a) **Ans.**

$$\Delta\sigma_{\max} = \frac{8.4853\,M}{a^3} - \frac{6M}{a^3} = 2.49\left(\frac{M}{a^3}\right)$$ **Ans.**

6–193. Draw the shear and moment diagrams for the shaft if it is subjected to the vertical loadings of the belt, gear, and flywheel. The bearings at A and B exert only vertical reactions on the shaft.

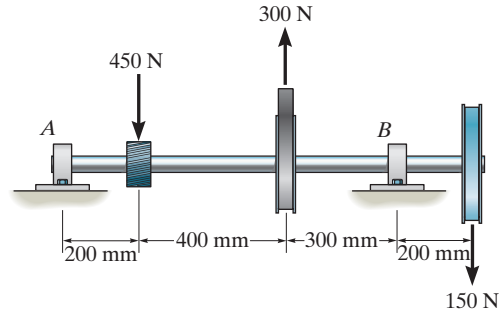

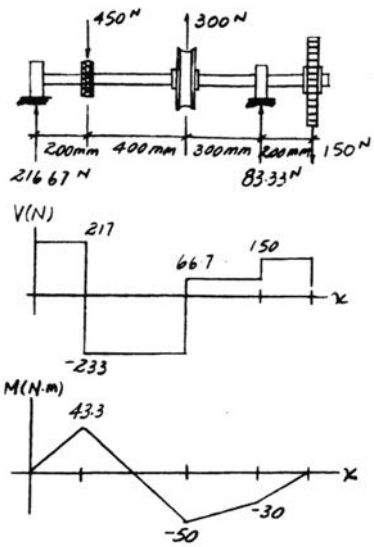

6–194. The strut has a square cross section a by a and is subjected to the bending moment **M** applied at an angle θ as shown. Determine the maximum bending stress in terms of a, M, and θ. What angle θ will give the largest bending stress in the strut? Specify the orientation of the neutral axis for this case.

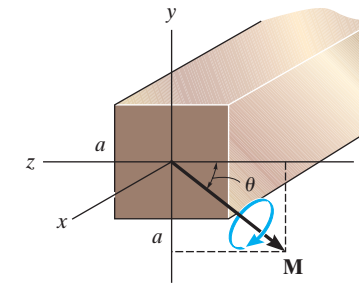

Internal Moment Components:

$$M_z = -M\cos\theta \qquad M_y = -M\sin\theta$$

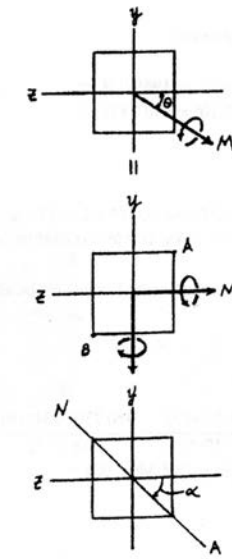

Section Property:

$$I_y = I_z = \frac{1}{12}a^4$$

Maximum Bending Stress: By Inspection, Maximum bending stress occurs at A and B. Applying the flexure formula for biaxial bending at point A

$$\sigma = -\frac{M_z y}{I_z} + \frac{M_y z}{I_y}$$

$$= -\frac{-M\cos\theta\left(\frac{a}{2}\right)}{\frac{1}{12}a^4} + \frac{-M\sin\theta\left(-\frac{a}{2}\right)}{\frac{1}{12}a^4}$$

$$= \frac{6M}{a^3}(\cos\theta + \sin\theta) \qquad \textbf{Ans.}$$

$$\frac{d\sigma}{d\theta} = \frac{6M}{a^3}(-\sin\theta + \cos\theta) = 0$$

$$\cos\theta - \sin\theta = 0$$

$$\theta = 45^\circ \qquad \textbf{Ans.}$$

Orientation of Neutral Axis:

$$\tan\alpha = \frac{I_z}{I_y}\tan\theta$$

$$\tan\alpha = (1)\tan(45^\circ)$$

$$\alpha = 45^\circ \qquad \textbf{Ans.}$$

Ans:

$$\sigma_{\max} = \frac{6M}{a^3}(\cos\theta + \sin\theta),$$

$$\theta = 45^\circ, \alpha = 45^\circ$$

7–1. If the wide-flange beam is subjected to a shear of $V = 20$ kN, determine the shear stress on the web at A. Indicate the shear-stress components on a volume element located at this point.

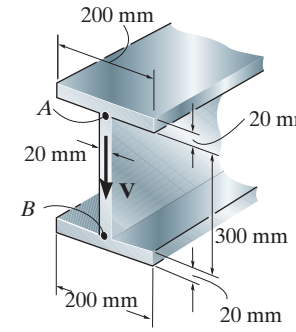

The moment of inertia of the cross-section about the neutral axis is

$$I = \frac{1}{12}(0.2)(0.34^3) - \frac{1}{12}(0.18)(0.3^3) = 0.2501(10^{-3})\ \text{m}^4$$

From Fig. *a*,

$$Q_A = \bar{y}'A' = 0.16\,(0.02)(0.2) = 0.64(10^{-3})\ \text{m}^3$$

Applying the shear formula,

$$\tau_A = \frac{VQ_A}{It} = \frac{20(10^3)[0.64(10^{-3})]}{0.2501(10^{-3})(0.02)}$$

$$= 2.559(10^6)\ \text{Pa} = 2.56\ \text{MPa} \qquad \textbf{Ans.}$$

The shear stress component at A is represented by the volume element shown in Fig. *b*.

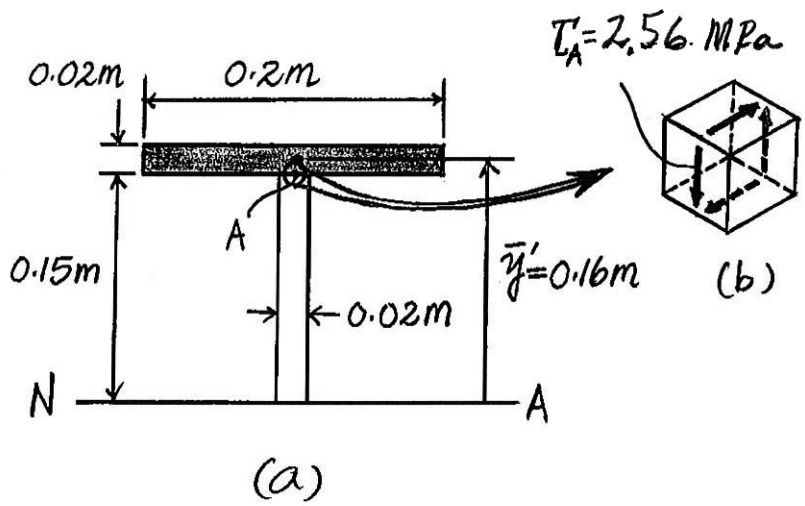

Ans:
$\tau_A = 2.56$ MPa

7–2. If the wide-flange beam is subjected to a shear of $V = 20$ kN, determine the maximum shear stress in the beam.

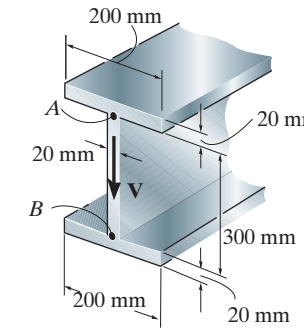

The moment of inertia of the cross-section about the neutral axis is

$$I = \frac{1}{12}(0.2)(0.34^3) - \frac{1}{12}(0.18)(0.3^3) = 0.2501(10^{-3})\ \text{m}^4$$

From Fig. *a*.

$$Q_{\max} = \Sigma \bar{y}'A' = 0.16\,(0.02)(0.2) + 0.075\,(0.15)(0.02) = 0.865(10^{-3})\ \text{m}^3$$

The maximum shear stress occurs at the points along neutral axis since Q is maximum and thickness t is the smallest.

$$\tau_{\max} = \frac{VQ_{\max}}{It} = \frac{20(10^3)\,[0.865(10^{-3})]}{0.2501(10^{-3})\,(0.02)}$$

$$= 3.459(10^6)\ \text{Pa} = 3.46\ \text{MPa} \qquad \textbf{Ans.}$$

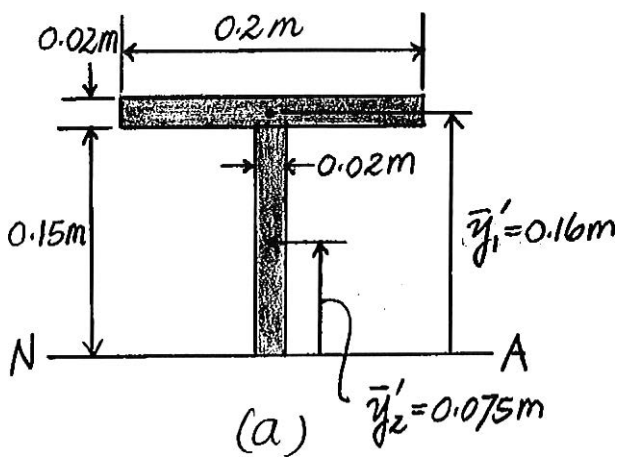

Ans:
$\tau_{\max} = 3.46$ MPa

7–3. If the wide-flange beam is subjected to a shear of $V = 20$ kN, determine the shear force resisted by the web of the beam.

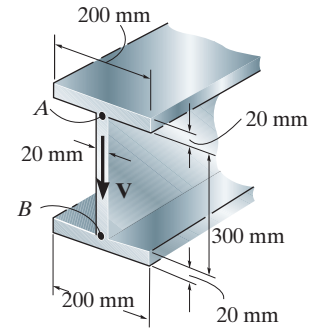

The moment of inertia of the cross-section about the neutral axis is

$$I = \frac{1}{12}(0.2)(0.34^3) - \frac{1}{12}(0.18)(0.3^3) = 0.2501(10^{-3})\ \text{m}^4$$

For $0 \le y < 0.15$ m, Fig. a, Q as a function of y is

$$Q = \Sigma \bar{y}' A' = 0.16\,(0.02)(0.2) + \frac{1}{2}(y + 0.15)(0.15 - y)(0.02)$$

$$= 0.865(10^{-3}) - 0.01y^2$$

For $0 \le y < 0.15$ m, $t = 0.02$ m. Thus.

$$\tau = \frac{VQ}{It} = \frac{20(10^3)\left[0.865(10^{-3}) - 0.01y^2\right]}{0.2501(10^{-3})\,(0.02)}$$

$$= \left\{3.459(10^6) - 39.99(10^6)\,y^2\right\}\ \text{Pa.}$$

The sheer force resisted by the web is,

$$V_w = 2\int_0^{0.15\text{ m}} \tau dA = 2\int_0^{0.15\text{ m}} \left[3.459(10^6) - 39.99(10^6)\,y^2\right](0.02\,dy)$$

$$= 18.95\,(10^3)\ \text{N} = 19.0\ \text{kN}$$ **Ans.**

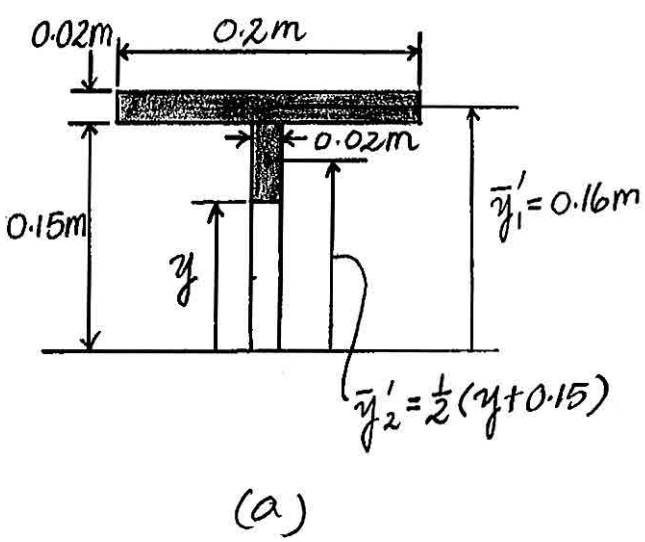

(a)

Ans:
$V_w = 19.0$ kN

***7–4.** If the T-beam is subjected to a vertical shear of $V = 12$ kip, determine the maximum shear stress in the beam. Also, compute the shear-stress jump at the flange-web junction AB. Sketch the variation of the shear-stress intensity over the entire cross section.

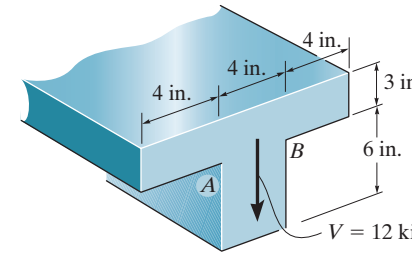

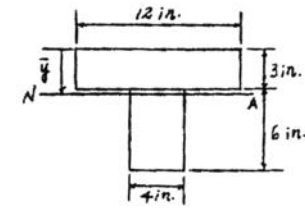

Section Properties:

$$\bar{y} = \frac{\Sigma \bar{y} A}{\Sigma A} = \frac{1.5(12)(3) + 6(4)(6)}{12(3) + 4(6)} = 3.30 \text{ in.}$$

$$I_{NA} = \frac{1}{12}(12)\left(3^3\right) + 12(3)(3.30 - 1.5)^2 + \frac{1}{12}(4)\left(6^3\right) + 4(6)(6 - 3.30)^2$$

$$= 390.60 \text{ in}^4$$

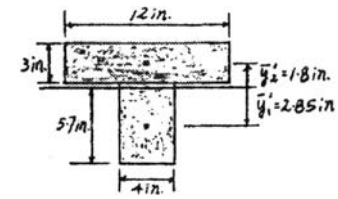

$$Q_{\max} = \bar{y}_1' A' = 2.85(5.7)(4) = 64.98 \text{ in}^3$$

$$Q_{AB} = \bar{y}_2' A' = 1.8(3)(12) = 64.8 \text{ in}^3$$

Shear Stress: Applying the shear formula $\tau = \dfrac{VQ}{It}$

$$\tau_{\max} = \frac{VQ_{\max}}{It} = \frac{12(64.98)}{390.60(4)} = 0.499 \text{ ksi} \qquad \textbf{Ans.}$$

$$(\tau_{AB})_f = \frac{VQ_{AB}}{It_f} = \frac{12(64.8)}{390.60(12)} = 0.166 \text{ ksi} \qquad \textbf{Ans.}$$

$$(\tau_{AB})_w = \frac{VQ_{AB}}{I\,t_W} = \frac{12(64.8)}{390.60(4)} = 0.498 \text{ ksi} \qquad \textbf{Ans.}$$

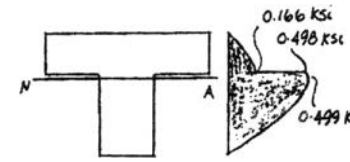

7–5. If the T-beam is subjected to a vertical shear of $V = 12$ kip, determine the vertical shear force resisted by the flange.

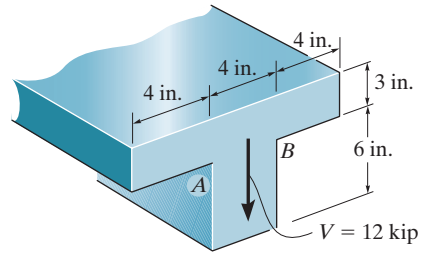

Section Properties:

$$\bar{y} = \frac{\Sigma \bar{y} A}{\Sigma A} = \frac{1.5(12)(3) + 6(4)(6)}{12(3) + 4(6)} = 3.30 \text{ in.}$$

$$I_{NA} = \frac{1}{12}(12)\left(3^3\right) + 12(3)(3.30 - 1.5)^2 + \frac{1}{12}(4)\left(6^3\right) + 6(4)(6 - 3.30)^2$$

$$= 390.60 \text{ in}^4$$

$$Q = \bar{y}' A' = (1.65 + 0.5y)(3.3 - y)(12) = 65.34 - 6y^2$$

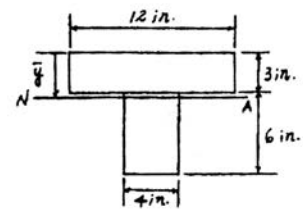

Shear Stress: Applying the shear formula

$$\tau = \frac{VQ}{It} = \frac{12(65.34 - 6y^2)}{390.60(12)}$$

$$= 0.16728 - 0.01536y^2$$

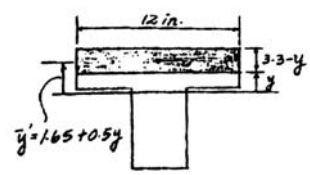

Resultant Shear Force: For the flange

$$V_f = \int_A \tau dA$$

$$= \int_{0.3 \text{ in}}^{3.3 \text{ in}} \left(0.16728 - 0.01536y^2\right)(12dy)$$

$$= 3.82 \text{ kip}$$ **Ans.**

Ans:
$V_f = 3.82$ kip

7–6. The wood beam has an allowable shear stress of $\tau_{allow} = 7$ MPa. Determine the maximum shear force V that can be applied to the cross section.

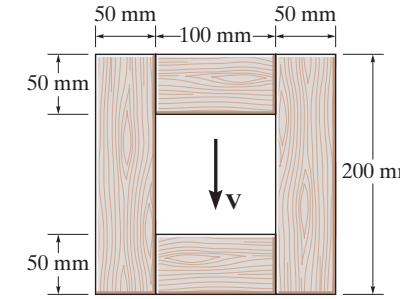

$$I = \frac{1}{12}(0.2)(0.2)^3 - \frac{1}{12}(0.1)(0.1)^3 = 125(10^{-6})\ \text{m}^4$$

$$\tau_{allow} = \frac{VQ_{max}}{It}$$

$$7(10^6) = \frac{V[(0.075)(0.1)(0.05) + 2(0.05)(0.1)(0.05)]}{125(10^{-6})(0.1)}$$

$V = 100$ kN **Ans.**

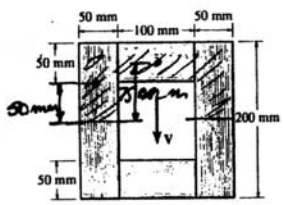

Ans:
$V_{max} = 100$ kN

7–7. The shaft is supported by a smooth thrust bearing at A and a smooth journal bearing at B. If $P = 20$ kN, determine the absolute maximum shear stress in the shaft.

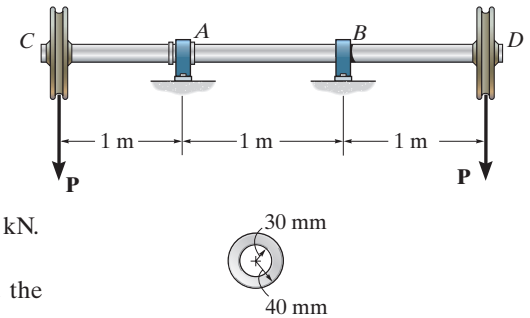

Support Reactions: As shown on the free-body diagram of the beam, Fig. *a*.

Maximum Shear: The shear diagram is shown in Fig. *b*. As indicated, $V_{max} = 20$ kN.

Section Properties: The moment of inertia of the hollow circular shaft about the neutral axis is

$$I = \frac{\pi}{4}(0.04^4 - 0.03^4) = 0.4375(10^{-6})\pi \text{ m}^4$$

Q_{max} can be computed by taking the first moment of the shaded area in Fig. *c* about the neutral axis.

Here, $\bar{y}_1' = \dfrac{4(0.04)}{3\pi} = \dfrac{4}{75\pi}$ m and $\bar{y}_2' = \dfrac{4(0.03)}{3\pi} = \dfrac{1}{25\pi}$ m. Thus,

$$Q_{max} = \bar{y}_1' A_1' - \bar{y}_2' A_2'$$

$$= \frac{4}{75\pi}\left[\frac{\pi}{2}(0.04^2)\right] - \frac{1}{25\pi}\left[\frac{\pi}{2}(0.03^2)\right] = 24.667(10^{-6}) \text{ m}^3$$

Shear Stress: The maximum shear stress occurs at points on the neutral axis since Q is maximum and the thickness $t = 2(0.04 - 0.03) = 0.02$ m is the smallest.

$$\tau_{max} = \frac{V_{max} Q_{max}}{It} = \frac{20(10^3)(24.667)(10^{-6})}{0.4375(10^{-6})\pi(0.02)} = 17.9 \text{ MPa}$$ **Ans.**

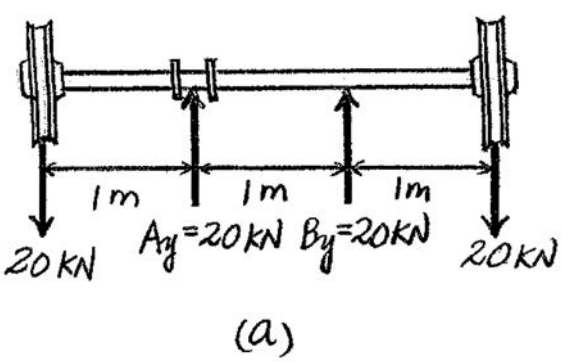

(a)

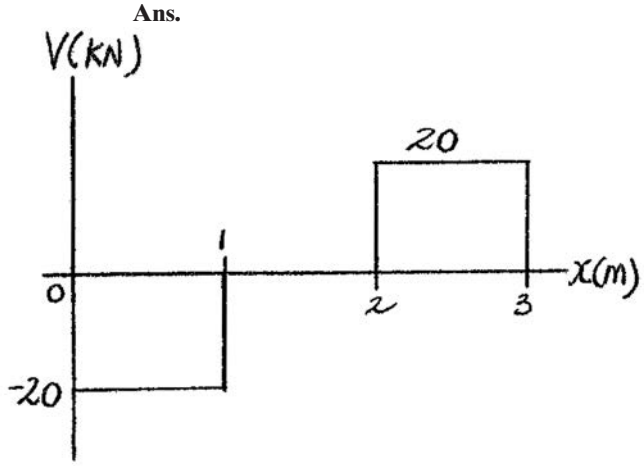

(b)

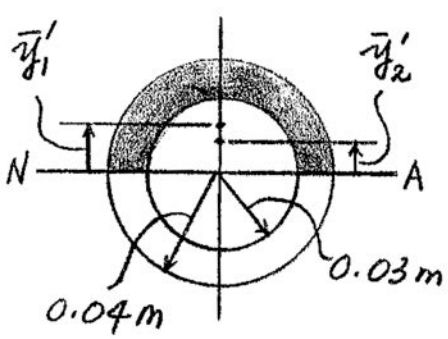

(c)

Ans:
$\tau_{max} = 17.9$ MPa

***7–8.** The shaft is supported by a smooth thrust bearing at A and a smooth journal bearing at B. If the shaft is made from a material having an allowable shear stress of $\tau_{allow} = 75$ MPa, determine the maximum value for P.

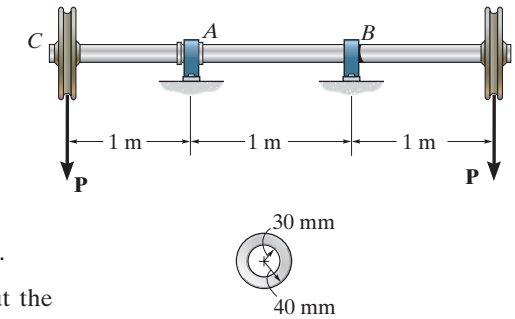

Support Reactions: As shown on the free-body diagram of the shaft, Fig. *a*.

Maximum Shear: The shear diagram is shown in Fig. *b*. As indicated, $V_{max} = P$.

Section Properties: The moment of inertia of the hollow circular shaft about the neutral axis is

$$I = \frac{\pi}{4}(0.04^4 - 0.03^4) = 0.4375(10^{-6})\pi \text{ m}^4$$

Q_{max} can be computed by taking the first moment of the shaded area in Fig. *c* about the neutral axis.

Here, $\bar{y}_1' = \dfrac{4(0.04)}{3\pi} = \dfrac{4}{75\pi}$ m and $\bar{y}_2' = \dfrac{4(0.03)}{3\pi} = \dfrac{1}{25\pi}$ m. Thus,

$$Q_{max} = \bar{y}_1' A_1' - \bar{y}_2' A_2'$$

$$= \frac{4}{75\pi}\left[\frac{\pi}{2}(0.04^2)\right] - \frac{1}{25\pi}\left[\frac{\pi}{2}(0.03^2)\right] = 24.667(10^{-6}) \text{ m}^3$$

Shear Stress: The maximum shear stress occurs at points on the neutral axis since Q is maximum and the thickness $t = 2(0.04 - 0.03) = 0.02$ m.

$$\tau_{allow} = \frac{V_{max} Q_{max}}{It}; \qquad 75(10^6) = \frac{P(24.667)(10^{-6})}{0.4375(10^{-6})\pi(0.02)}$$

$$P = 83\,581.22 \text{ N} = 83.6 \text{ kN} \qquad \textbf{Ans.}$$

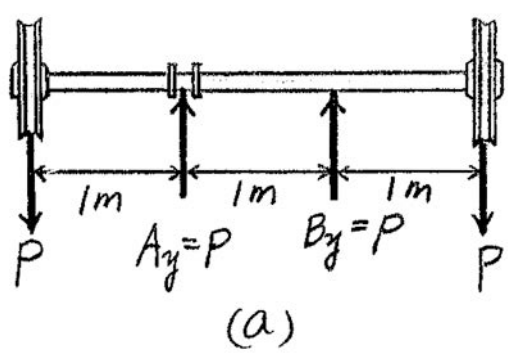

(a)

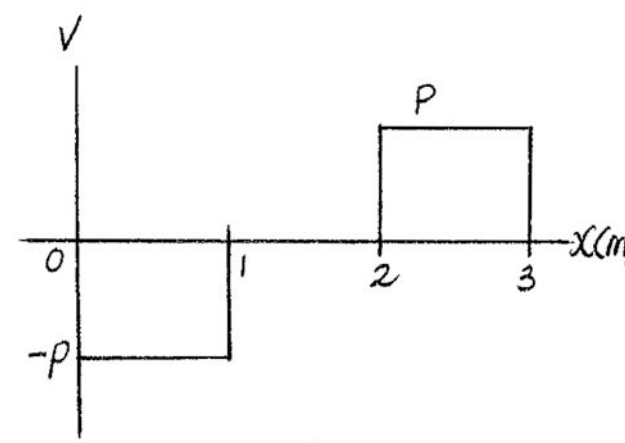

(b)

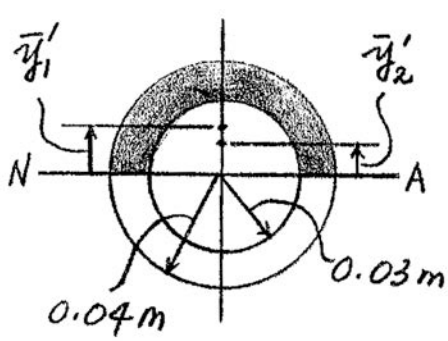

(c)

7–9. Determine the largest shear force V that the member can sustain if the allowable shear stress is $\tau_{allow} = 8$ ksi.

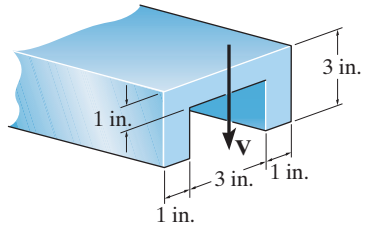

$$\bar{y} = \frac{(0.5)(1)(5) + 2\,[(2)(1)(2)]}{1\,(5) + 2\,(1)(2)} = 1.1667 \text{ in.}$$

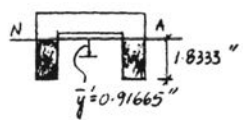

$$I = \frac{1}{12}(5)(1^3) + 5\,(1)(1.1667 - 0.5)^2$$

$$+ 2\left(\frac{1}{12}\right)(1)(2^3) + 2\,(1)(2)(2 - 1.1667)^2 = 6.75 \text{ in}^4$$

$$Q_{max} = \Sigma \bar{y}' A' = 2\,(0.91665)(1.8333)(1) = 3.3611 \text{ in}^3$$

$$\tau_{max} = \tau_{allow} = \frac{V Q_{max}}{I\,t}$$

$$8\,(10^3) = \frac{V\,(3.3611)}{6.75\,(2)(1)}$$

$V = 32132$ lb $= 32.1$ kip **Ans.**

Ans:
$V = 32.1$ kip

7–10. If the applied shear force $V = 18$ kip, determine the maximum shear stress in the member.

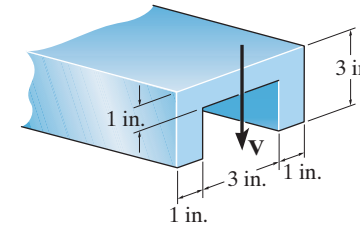

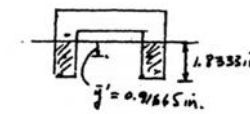

$$\bar{y} = \frac{(0.5)(1)(5) + 2\,[(2)(1)(2)]}{1\,(5) + 2\,(1)(2)} = 1.1667 \text{ in.}$$

$$I = \frac{1}{12}(5)(1^3) + 5\,(1)(1.1667 - 0.5)^2$$

$$+ 2\left(\frac{1}{12}\right)(1)(2^3) + 2\,(1)(2)(2 - 1.1667) = 6.75 \text{ in}^4$$

$$Q_{\max} = \Sigma \bar{y}' A' = 2\,(0.91665)(1.8333)(1) = 3.3611 \text{ in}^3$$

$$\tau_{\max} = \frac{V Q_{\max}}{I\,t} = \frac{18(3.3611)}{6.75\,(2)(1)} = 4.48 \text{ ksi}$$ **Ans.**

Ans:
$\tau_{\max} = 4.48$ ksi

7–11. The overhang beam is subjected to the uniform distributed load having an intensity of $w = 50\text{ kN/m}$. Determine the maximum shear stress developed in the beam.

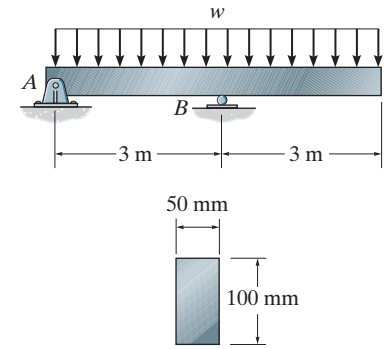

$$\tau_{max} = \frac{VQ}{It} = \frac{150(10^3)\text{ N }(0.025\text{ m})(0.05\text{ m})(0.05\text{ m})}{\frac{1}{12}(0.05\text{ m})(0.1\text{ m})^3(0.05\text{ m})}$$

$$\tau_{max} = 45.0\text{ MPa}$$ **Ans.**

Because the cross section is a rectangle, then also,

$$\tau_{max} = 1.5\frac{V}{A} = 1.5\frac{150(10^3)\text{ N}}{(0.05\text{ m})(0.1\text{ m})} = 45.0\text{ MPa}$$ **Ans.**

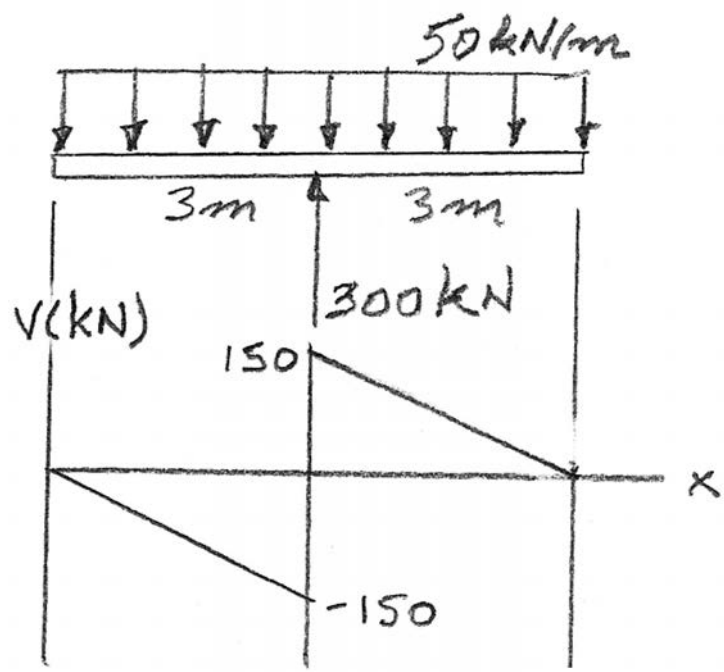

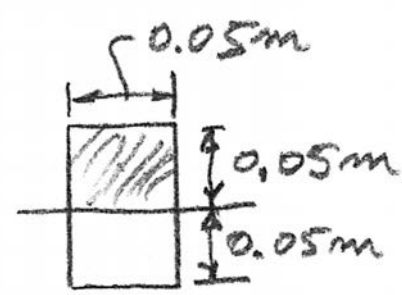

Ans:
$\tau_{max} = 45.0\text{ MPa}$

***7–12.** The beam has a rectangular cross section and is made of wood having an allowable shear stress of $\tau_{allow} = 200$ psi. Determine the maximum shear force V that can be developed in the cross section of the beam. Also, plot the shear-stress variation over the cross section.

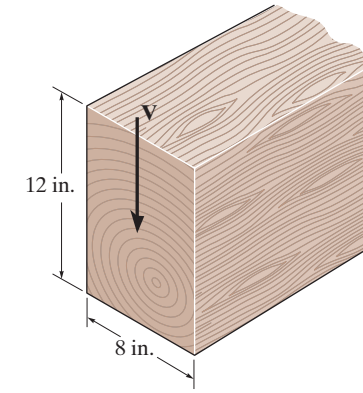

Section Properties: The moment of inertia of the cross section about the neutral axis is

$$I = \frac{1}{12}(8)(12^3) = 1152 \text{ in}^4$$

Q as the function of y, Fig. a,

$$Q = \frac{1}{2}(y + 6)(6 - y)(8) = 4(36 - y^2)$$

Q_{max} occurs when $y = 0$. Thus,

$$Q_{max} = 4(36 - 0^2) = 144 \text{ in}^3$$

The maximum shear stress occurs of points along the neutral axis since Q is maximum and the thickness $t = 8$ in. is constant.

$$\tau_{allow} = \frac{VQ_{max}}{It}; \qquad 200 = \frac{V(144)}{1152(8)}$$

$$V = 12800 \text{ lb} = 12.8 \text{ kip} \qquad \textbf{Ans.}$$

Thus, the shear stress distribution as a function of y is

$$\tau = \frac{VQ}{It} = \frac{12.8(10^3)\left[4(36 - y^2)\right]}{1152\,(8)}$$

$$= \left\{5.56\,(36 - y^2)\right\} \text{ psi}$$

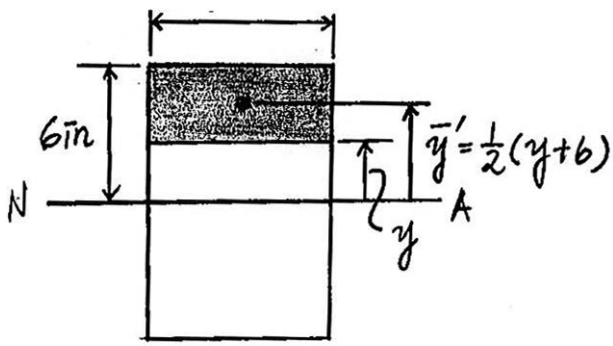

(a)

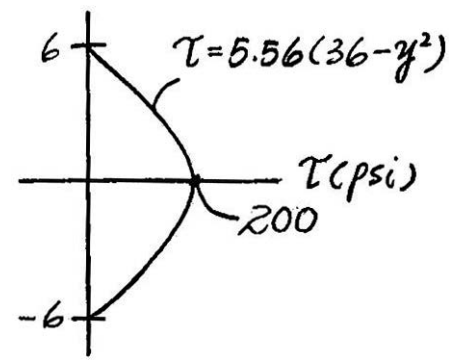

7–13. Determine the maximum shear stress in the strut if it is subjected to a shear force of $V = 20$ kN.

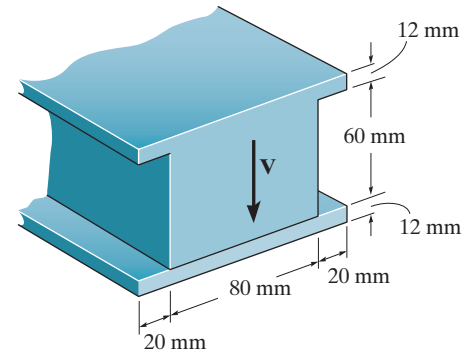

Section Properties:

$$I_{NA} = \frac{1}{12}(0.12)\left(0.084^3\right) - \frac{1}{12}(0.04)\left(0.06^3\right)$$

$$= 5.20704\left(10^{-6}\right)\text{ m}^4$$

$$Q_{\max} = \Sigma \bar{y}' A'$$

$$= 0.015(0.08)(0.03) + 0.036(0.012)(0.12)$$

$$= 87.84\left(10^{-6}\right)\text{ m}^3$$

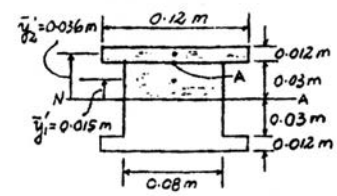

Maximum Shear Stress: Maximum shear stress occurs at the point where the neutral axis passes through the section.

Applying the shear formula

$$\tau_{\max} = \frac{VQ_{\max}}{It}$$

$$= \frac{20(10^3)(87.84)(10^{-6})}{5.20704(10^{-6})(0.08)}$$

$$= 4.22\text{ MPa} \qquad \textbf{Ans.}$$

Ans:
$\tau_{\max} = 4.22$ MPa

7–14. Determine the maximum shear force V that the strut can support if the allowable shear stress for the material is $\tau_{\text{allow}} = 40$ MPa.

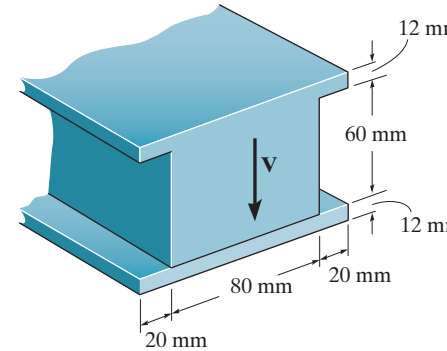

Section Properties:

$$I_{NA} = \frac{1}{12}(0.12)\left(0.084^3\right) - \frac{1}{12}(0.04)\left(0.06^3\right)$$

$$= 5.20704\left(10^{-6}\right)\ \text{m}^4$$

$$Q_{\max} = \Sigma \bar{y}' A'$$

$$= 0.015(0.08)(0.03) + 0.036(0.012)(0.12)$$

$$= 87.84\left(10^{-6}\right)\ \text{m}^3$$

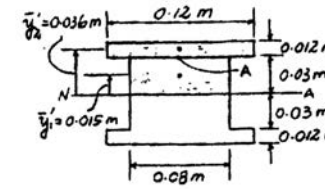

Allowable Shear Stress: Maximum shear stress occurs at the point where the neutral axis passes through the section.

Applying the shear formula

$$\tau_{\max} = \tau_{\text{allow}} = \frac{VQ_{\max}}{It}$$

$$40\left(10^6\right) = \frac{V(87.84)(10^{-6})}{5.20704(10^{-6})(0.08)}$$

$$V = 189\,692\ \text{N} = 190\ \text{kN} \qquad \textbf{Ans.}$$

Ans:
$V = 190$ kN

7–15. The strut is subjected to a vertical shear of $V = 130$ kN. Plot the intensity of the shear-stress distribution acting over the cross-sectional area, and compute the resultant shear force developed in the vertical segment AB.

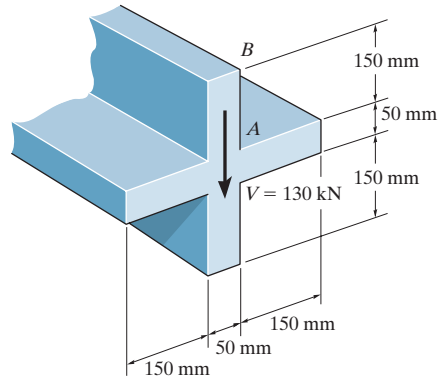

$$I = \frac{1}{12}(0.05)(0.35^3) + \frac{1}{12}(0.3)(0.05^3) = 0.18177083(10^{-3})\ \text{m}^4$$

$$Q_C = \bar{y}'A' = (0.1)(0.05)(0.15) = 0.75(10^{-3})\ \text{m}^3$$

$$Q_D = \Sigma \bar{y}'A' = (0.1)(0.05)(0.15) + (0.0125)(0.35)(0.025)$$

$$= 0.859375(10^{-3})\ \text{m}^3$$

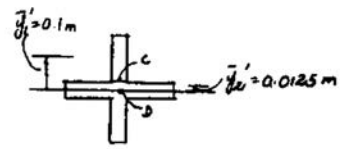

$$\tau = \frac{VQ}{It}$$

$$(\tau_C)_{t\,=\,0.05\ \text{m}} = \frac{130(10^3)(0.75)(10^{-3})}{0.18177083(10^{-3})(0.05)} = 10.7\ \text{MPa}$$

$$(\tau_C)_{t\,=\,0.35\ \text{m}} = \frac{130(10^3)(0.75)(10^{-3})}{0.18177083(10^{-3})(0.35)} = 1.53\ \text{MPa}$$

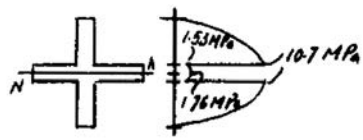

$$\tau_D = \frac{130(10^3)(0.859375)(10^{-3})}{0.18177083(10^{-3})(0.35)} = 1.76\ \text{MPa}$$

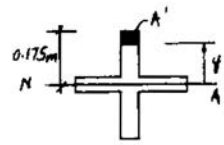

$$A' = (0.05)(0.175 - y)$$

$$\bar{y}' = y + \frac{(0.175 - y)}{2} = \frac{1}{2}(0.175 + y)$$

$$Q = \bar{y}'A' = 0.025(0.030625 - y^2)$$

$$\tau = \frac{VQ}{It}$$

$$= \frac{130(0.025)(0.030625 - y^2)}{0.18177083(10^{-3})(0.05)}$$

$$= 10951.3 - 357593.1\,y^2$$

$$V_{AB} = \int \tau\, dA \qquad dA = 0.05\, dy$$

$$= \int_{0.025}^{0.175} (10951.3 - 357593.1y^2)(0.05\, dy)$$

$$= \int_{0.025}^{0.175} (547.565 - 17879.66y^2)\, dy$$

$$= 50.3\ \text{kN}$$ **Ans.**

Ans:
$V_{AB} = 50.3$ kN

***7–16.** The steel rod has a radius of 1.25 in. If it is subjected to a shear of $V = 5$ kip, determine the maximum shear stress.

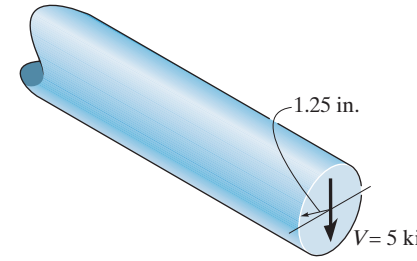

$$\bar{y}' = \frac{4r}{3\pi} = \frac{4(1.25)}{3\pi} = \frac{5}{3\pi}$$

$$I = \frac{1}{4}\pi r^4 = \frac{1}{4}\pi(1.25)^4 = 0.610351\,\pi$$

$$Q = \bar{y}'A' = \frac{5}{3\pi}\frac{\pi(1.25^2)}{2} = 1.3020833 \text{ in}^3$$

$$\tau_{\max} = \frac{VQ}{It} = \frac{5(10^3)(1.3020833)}{0.610351(\pi)(2.50)} = 1358 \text{ psi} = 1.36 \text{ ksi}$$ **Ans.**

7–17. If the beam is subjected to a shear of $V = 15$ kN, determine the web's shear stress at A and B. Indicate the shear-stress components on a volume element located at these points. Set $w = 125$ mm. Show that the neutral axis is located at $\bar{y} = 0.1747$ m from the bottom and $I_{NA} = 0.2182(10^{-3})\ \text{m}^4$.

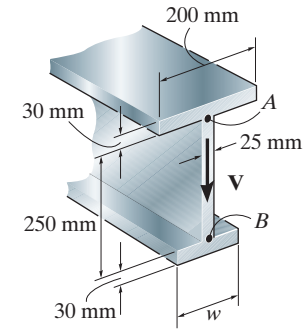

$$\bar{y} = \frac{(0.015)(0.125)(0.03) + (0.155)(0.025)(0.25) + (0.295)(0.2)(0.03)}{0.125(0.03) + (0.025)(0.25) + (0.2)(0.03)} = 0.1747 \text{ m}$$

$$I = \frac{1}{12}(0.125)(0.03^3) + 0.125(0.03)(0.1747 - 0.015)^2$$
$$+ \frac{1}{12}(0.025)(0.25^3) + 0.25(0.025)(0.1747 - 0.155)^2$$
$$+ \frac{1}{12}(0.2)(0.03^3) + 0.2(0.03)(0.295 - 0.1747)^2 = 0.218182(10^{-3})\ \text{m}^4$$

$$Q_A = \bar{y}A'_A = (0.310 - 0.015 - 0.1747)(0.2)(0.03) = 0.7219(10^{-3})\ \text{m}^3$$

$$Q_B = \bar{y}A'_B = (0.1747 - 0.015)(0.125)(0.03) = 0.59883(10^{-3})\ \text{m}^3$$

$$\tau_A = \frac{VQ_A}{It} = \frac{15(10^3)(0.7219)(10^{-3})}{0.218182(10^{-3})0.025} = 1.99 \text{ MPa} \qquad \textbf{Ans.}$$

$$\tau_B = \frac{VQ_B}{It} = \frac{15(10^3)(0.59883)(10^{-3})}{0.218182(10^{-3})0.025} = 1.65 \text{ MPa} \qquad \textbf{Ans.}$$

Ans:
$\tau_A = 1.99$ MPa, $\tau_B = 1.65$ MPa

7–18. If the wide-flange beam is subjected to a shear of $V = 30$ kN, determine the maximum shear stress in the beam. Set $w = 200$ mm.

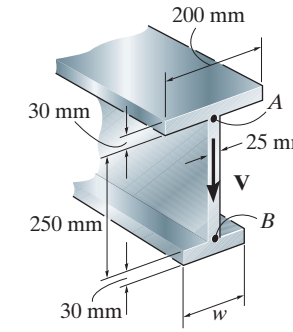

Section Properties:

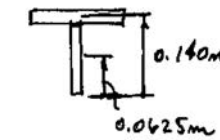

$$I = \frac{1}{12}(0.2)(0.310)^3 - \frac{1}{12}(0.175)(0.250)^3 = 268.652(10)^{-6}\ \text{m}^4$$

$$Q_{\max} = \Sigma \bar{y} A = 0.0625(0.125)(0.025) + 0.140(0.2)(0.030) = 1.0353(10)^{-3}\ \text{m}^3$$

$$\tau_{\max} = \frac{VQ}{It} = \frac{30(10)^3(1.0353)(10)^{-3}}{268.652(10)^{-6}(0.025)} = 4.62\ \text{MPa}$$ **Ans.**

Ans:
$\tau_{\max} = 4.62$ MPa

7–19. If the wide-flange beam is subjected to a shear of $V = 30$ kN, determine the shear force resisted by the web of the beam. Set $w = 200$ mm.

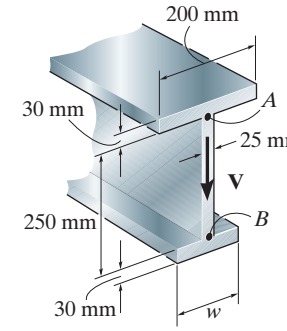

$$I = \frac{1}{12}(0.2)(0.310)^3 - \frac{1}{12}(0.175)(0.250)^3 = 268.652(10)^{-6}\ \text{m}^4$$

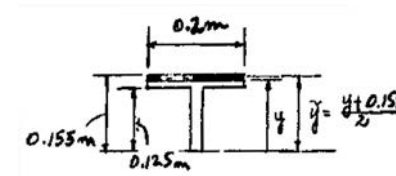

$$Q = \left(\frac{0.155 + y}{2}\right)(0.155 - y)(0.2) = 0.1(0.024025 - y^2)$$

$$\tau_f = \frac{30(10)^3(0.1)(0.024025 - y^2)}{268.652(10)^{-6}(0.2)}$$

$$V_f = \int \tau_f\ dA = 55.8343(10)^6 \int_{0.125}^{0.155} (0.024025 - y^2)(0.2\ dy)$$

$$= 11.1669(10)^6 \left[0.024025y - \frac{1}{3}y^3\right]_{0.125}^{0.155}$$

$$V_f = 1.457\ \text{kN}$$

$$V_w = 30 - 2(1.457) = 27.1\ \text{kN}$$ **Ans.**

Ans:
$V_w = 27.1$ kN

***7–20.** The steel rod is subjected to a shear of 30 kip. Determine the maximum shear stress in the rod.

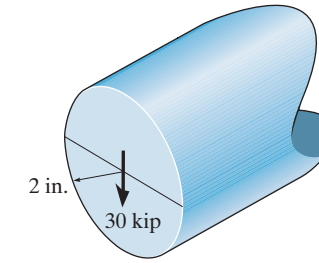

The moment of inertia of the circular cross section about the neutral axis (x axis) is

$$I = \frac{\pi}{4} r^4 = \frac{\pi}{4}(2^4) = 4\pi \text{ in}^4$$

Q for the differential area shown shaded in Fig. a is

$$dQ = y\,dA = y(2x\,dy) = 2xy\,dy$$

However, from the equation of the circle, $x = (4 - y^2)^{\frac{1}{2}}$, Then

$$dQ = 2y(4 - y^2)^{\frac{1}{2}}\,dy$$

Thus, Q for the area above y is

$$Q = \int_y^{2\text{ in}} 2y\,(4 - y^2)^{\frac{1}{2}}\,dy$$

$$= -\frac{2}{3}(4 - y^2)^{\frac{3}{2}}\Big|_y^{2\text{ in}}$$

$$= \frac{2}{3}(4 - y^2)^{\frac{3}{2}}$$

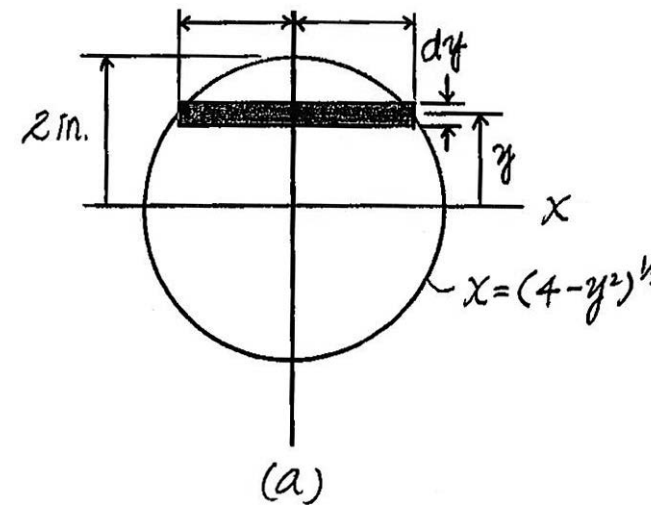

Here, $t = 2x = 2(4 - y^2)^{\frac{1}{2}}$. Thus

$$\tau = \frac{VQ}{It} = \frac{30\left[\frac{2}{3}(4 - y^2)^{\frac{3}{2}}\right]}{4\pi\left[2(4 - y^2)^{\frac{1}{2}}\right]}$$

$$\tau = \frac{5}{2\pi}(4 - y^2) \text{ ksi}$$

By inspecting this equation, $\tau = \tau_{\max}$ at $y = 0$. Thus

$$\tau_{\max} = \frac{20}{2\pi} = \frac{10}{\pi} = 3.18 \text{ ksi}$$ **Ans.**

7–21. If the beam is made from wood having an allowable shear stress $\tau_{allow} = 400$ psi, determine the maximum magnitude of **P**. Set $d = 4$ in.

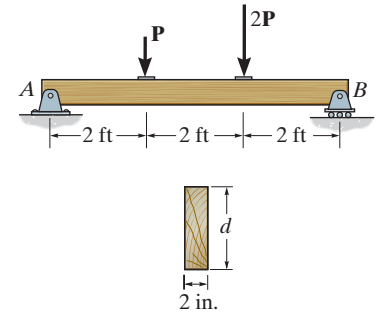

Support Reactions: As shown on the free-body diagram of the beam, Fig. *a*.

Maximum Shear: The shear diagram is shown in Fig. *b*. As indicated, $V_{max} = 1.667P$.

Section Properties: The moment of inertia of the the rectangular beam is

$$I = \frac{1}{12}(2)(4^3) = 10.667 \text{ in}^4$$

Q_{max} can be computed by taking the first moment of the shaded area in Fig. *c* about the neutral axis.

$$Q_{max} = \bar{y}'A' = 1(2)(2) = 4 \text{ in}^3$$

Shear Stress: The maximum shear stress occurs at points on the neutral axis since Q is maximum and the thickness $t = 2$ in. is constant.

$$\tau_{allow} = \frac{V_{max} Q_{max}}{It}; \qquad 400 = \frac{1.667P(4)}{10.667(2)}$$

$$P = 1280 \text{ lb} = 1.28 \text{ kip} \qquad \textbf{Ans.}$$

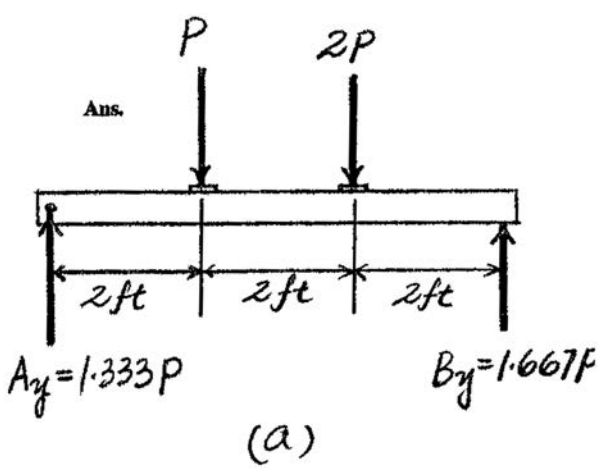

(a)

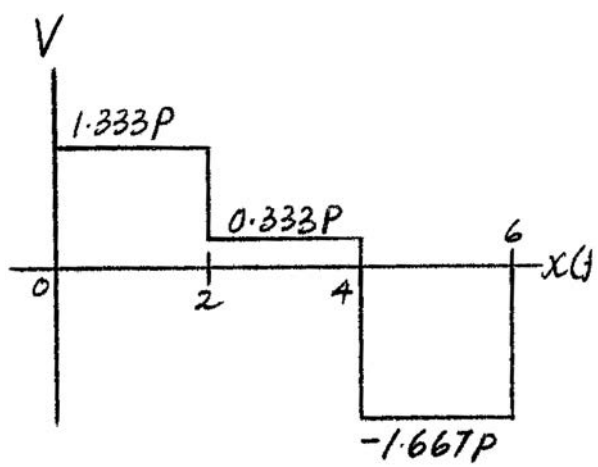

(b)

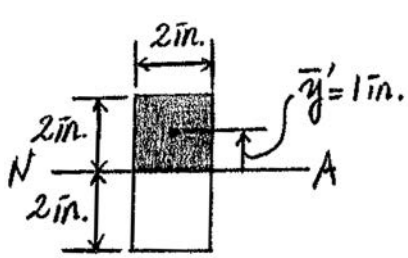

(c)

Ans:
$P = 1.28$ kip

7–22. Determine the shear stress at point B on the web of the cantilevered strut at section a–a.

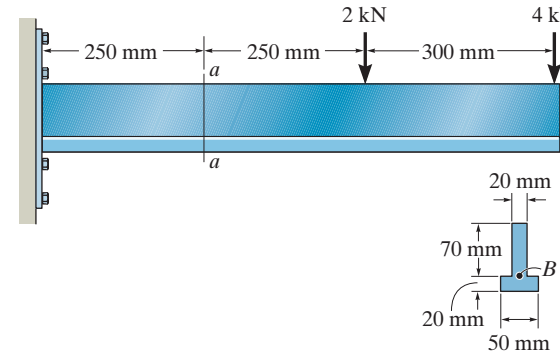

$$\bar{y} = \frac{(0.01)(0.05)(0.02) + (0.055)(0.07)(0.02)}{(0.05)(0.02) + (0.07)(0.02)} = 0.03625 \text{ m}$$

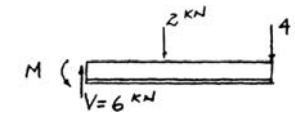

$$I = \frac{1}{12}(0.05)(0.02^3) + (0.05)(0.02)(0.03625 - 0.01)^2$$

$$+ \frac{1}{12}(0.02)(0.07^3) + (0.02)(0.07)(0.055 - 0.03625)^2 = 1.78625(10^{-6}) \text{ m}^4$$

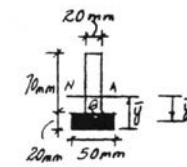

$$\bar{y}'_B = 0.03625 - 0.01 = 0.02625 \text{ m}$$

$$Q_B = (0.02)(0.05)(0.02625) = 26.25(10^{-6}) \text{ m}^3$$

$$\tau_B = \frac{VQ_B}{I\,t} = \frac{6(10^3)(26.25)(10^{-6})}{1.78622(10^{-6})(0.02)}$$

$$= 4.41 \text{ MPa}$$ **Ans.**

Ans:
$\tau_B = 4.41$ MPa

7–23. Determine the maximum shear stress acting at section *a–a* of the cantilevered strut.

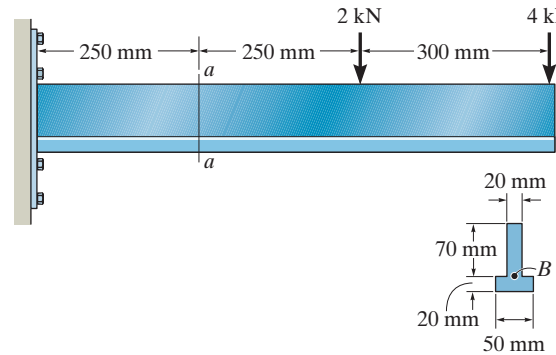

$$\bar{y} = \frac{(0.01)(0.05)(0.02) + (0.055)(0.07)(0.02)}{(0.05)(0.02) + (0.07)(0.02)} = 0.03625 \text{ m}$$

$$I = \frac{1}{12}(0.05)(0.02^3) + (0.05)(0.02)(0.03625 - 0.01)^2$$

$$+ \frac{1}{12}(0.02)(0.07^3) + (0.02)(0.07)(0.055 - 0.03625)^2 = 1.78625(10^{-6}) \text{ m}^4$$

$$Q_{max} = \bar{y}'A' = (0.026875)(0.05375)(0.02) = 28.8906(10^{-6}) \text{ m}^3$$

$$\tau_{max} = \frac{VQ_{max}}{It} = \frac{6(10^3)(28.8906)(10^{-6})}{1.78625(10^{-6})(0.02)}$$

$$= 4.85 \text{ MPa}$$ **Ans.**

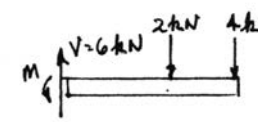

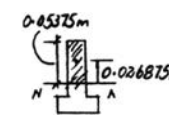

Ans:
$\tau_{max} = 4.85$ MPa

***7–24.** Determine the maximum shear stress in the T-beam at the critical section where the internal shear force is maximum.

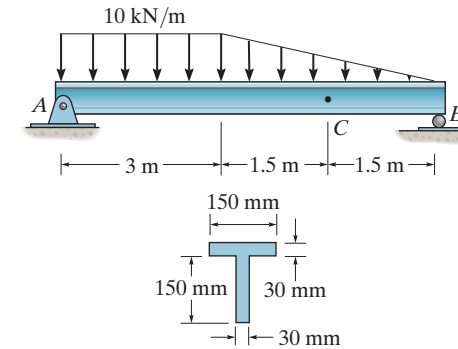

The FBD of the beam is shown in Fig. *a*,

The shear diagram is shown in Fig. *b*. As indicated, $V_{max} = 27.5$ kN

The neutral axis passes through centroid *c* of the cross section, Fig. *c*.

$$\bar{y} = \frac{\Sigma\, \tilde{y}\, A}{\Sigma A} = \frac{0.075(0.15)(0.03) + 0.165(0.03)(0.15)}{0.15(0.03) + 0.03(0.15)}$$

$$= 0.12 \text{ m}$$

$$I = \frac{1}{12}(0.03)(0.15^3) + 0.03(0.15)(0.12 - 0.075)^2$$

$$+ \frac{1}{12}(0.15)(0.03^3) + 0.15(0.03)(0.165 - 0.12)^2$$

$$= 27.0(10^{-6}) \text{ m}^4$$

From Fig. *d*,

$$Q_{max} = \bar{y}' A' = 0.06(0.12)(0.03)$$

$$= 0.216\,(10^{-3}) \text{ m}^3$$

The maximum shear stress occurs at points on the neutral axis since Q is maximum and thickness $t = 0.03$ m is the smallest.

$$\tau_{max} = \frac{V_{max} Q_{max}}{I t} = \frac{27.5(10^3)\left[0.216(10^{-3})\right]}{27.0(10^{-6})(0.03)}$$

$$= 7.333(10^6) \text{ Pa}$$

$$= 7.33 \text{ MPa}$$ **Ans.**

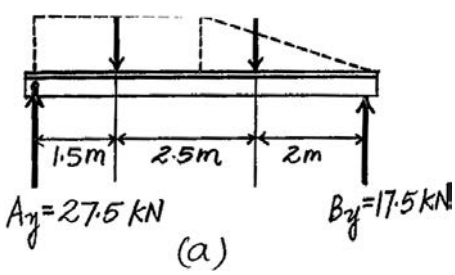

(a)

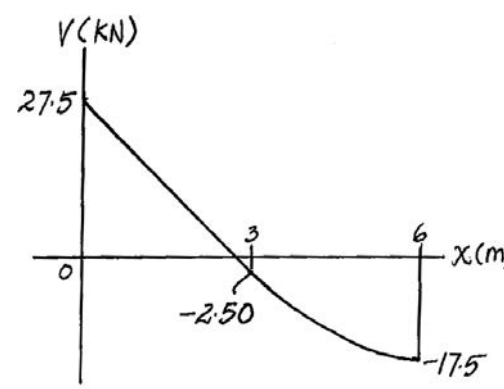

(b)

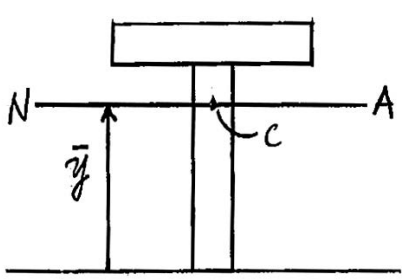

(c)

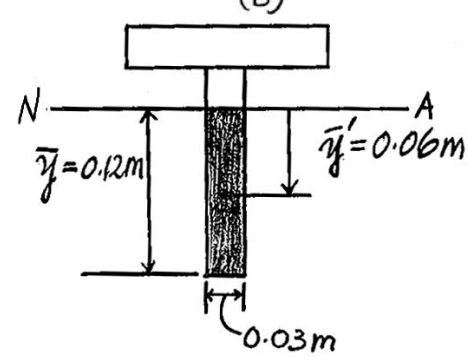

(d)

7–25. Determine the maximum shear stress in the T-beam at section C. Show the result on a volume element at this point.

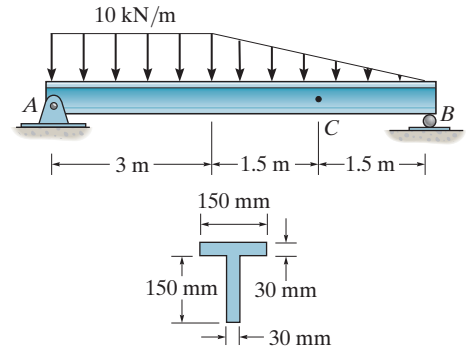

Using the method of sections (Fig. *a*),

$$+\uparrow \Sigma F_y = 0; \qquad V_C + 17.5 - \frac{1}{2}(5)(1.5) = 0$$

$$V_C = -13.75 \text{ kN}$$

The neutral axis passes through centroid C of the cross section,

$$\bar{y} = \frac{\Sigma \bar{y} A}{\Sigma A} = \frac{0.075\,(0.15)(0.03) + 0.165(0.03)(0.15)}{0.15(0.03) + 0.03(0.15)}$$

$$= 0.12 \text{ m}$$

$$I = \frac{1}{12}(0.03)(0.15^3) + 0.03(0.15)(0.12 - 0.075)^2$$

$$+ \frac{1}{12}(0.15)(0.03^3) + 0.15(0.03)(0.165 - 0.12)^2$$

$$= 27.0\,(10^{-6}) \text{ m}^4$$

$$Q_{\max} = \bar{y}' A' = 0.06\,(0.12)(0.03)$$

$$= 0.216\,(10^{-3}) \text{ m}^3\ 490$$

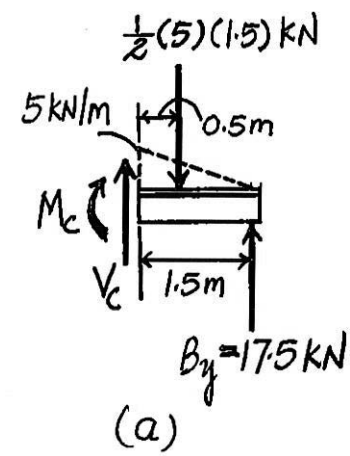

The maximum shear stress occurs at points on the neutral axis since Q is maximum and thickness $t = 0.03$ m is the smallest (Fig. *b*).

$$\tau_{\max} = \frac{V_C Q_{\max}}{It} = \frac{13.75(10^3)\left[0.216(10^{-3})\right]}{27.0(10^{-6})\,(0.03)}$$

$$= 3.667(10^6) \text{ Pa} = 3.67 \text{ MPa} \qquad \textbf{Ans.}$$

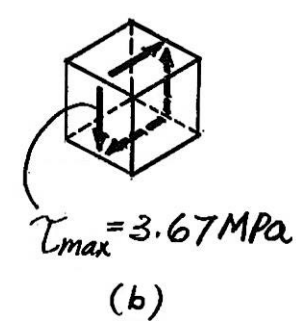

Ans:
$\tau_{\max} = 3.67$ MPa

7–26. The beam has a square cross section and is made of wood having an allowable shear stress of $\tau_{allow} = 1.4$ ksi. If it is subjected to a shear of $V = 1.5$ kip, determine the smallest dimension a of its sides.

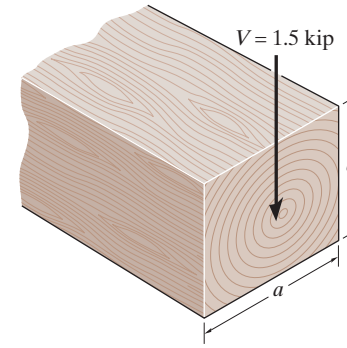

$$I = \frac{1}{12}a^4$$

$$Q_{max} = \bar{y}'A' = \left(\frac{a}{4}\right)\left(\frac{a}{2}\right)a = \frac{a^3}{8}$$

$$\tau_{max} = \tau_{allow} = \frac{VQ_{max}}{It}$$

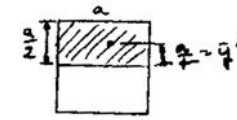

$$1.4 = \frac{1.5\left(\frac{a^3}{8}\right)}{\frac{1}{12}(a^4)(a)}$$

$a = 1.27$ in. **Ans.**

Ans:
$a = 1.27$ in.

7–27. The beam is slit longitudinally along both sides as shown. If it is subjected to an internal shear of $V = 250$ kN, compare the maximum shear stress developed in the beam before and after the cuts were made.

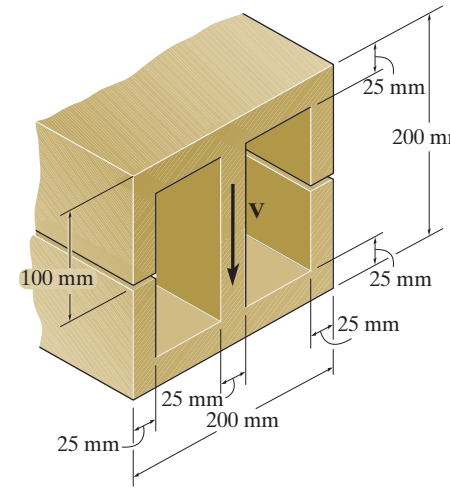

Section Properties: The moment of inertia of the cross section about the neutral axis is

$$I = \frac{1}{12}(0.2)(0.2^3) - \frac{1}{12}(0.125)(0.15^3) = 98.1771(10^{-6})\ \text{m}^4$$

Q_{max} is the first moment of the shaded area shown in Fig. *a* about the neutral axis. Thus,

$$Q_{max} = 3\bar{y}'_1 A'_1 + \bar{y}'_2 A'_2$$

$$= 3\left[0.0375(0.075)(0.025)\right] + 0.0875(0.025)(0.2)$$

$$= 0.6484375(10^{-3})\ \text{m}^3$$

Maximum Shear Stress: The maximum shear stress occurs at the points on the neutral axis since Q is maximum and t is minimum. Before the cross section is slit, $t = 3(0.025) = 0.075$ m.

$$\tau_{max} = \frac{VQ_{max}}{It} = \frac{250(10^3)(0.6484375)(10^{-3})}{98.1771(10^{-6})(0.075)} = 22.0\ \text{MPa} \qquad \textbf{Ans.}$$

After the cross section is slit, $t = 0.025$ m.

$$(\tau_{max})_s = \frac{VQ_{max}}{It} = \frac{250(10^3)(0.6484375)(10^{-3})}{98.1771(10^{-6})(0.025)} = 66.0\ \text{MPa} \qquad \textbf{Ans.}$$

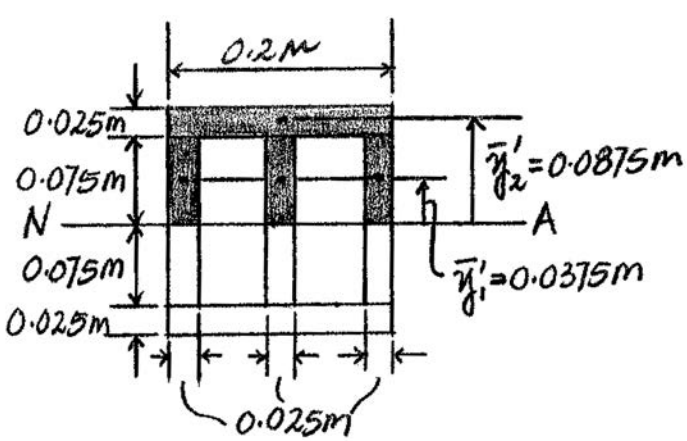

(a)

Ans:
$\tau_{max} = 22.0$ MPa, $(\tau_{max})_s = 66.0$ MPa

***7–28.** The beam is to be cut longitudinally along both sides as shown. If it is made from a material having an allowable shear stress of $\tau_{allow} = 75$ MPa, determine the maximum allowable internal shear force **V** that can be applied before and after the cut is made.

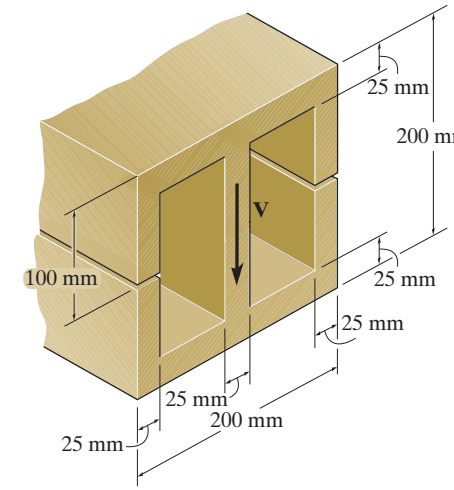

Section Properties: The moment of inertia of the cross section about the neutral axis is

$$I = \frac{1}{12}(0.2)(0.2^3) - \frac{1}{12}(0.125)(0.15^3) = 98.1771(10^{-6})\ \text{m}^4$$

Q_{max} is the first moment of the shaded area shown in Fig. *a* about the neutral axis. Thus,

$$Q_{max} = 3\bar{y}'_1 A'_1 + \bar{y}'_2 A'_2$$

$$= 3(0.0375)(0.075)(0.025) + 0.0875(0.025)(0.2)$$

$$= 0.6484375(10^{-3})\ \text{m}^3$$

Shear Stress: The maximum shear stress occurs at the points on the neutral axis since Q is maximum and thickness t is minimum. Before the cross section is slit, $t = 3(0.025) = 0.075$ m.

$$\tau_{allow} = \frac{VQ_{max}}{It}; \qquad 75(10^6) = \frac{V(0.6484375)(10^{-3})}{98.1771(10^{-6})(0.075)}$$

$$V = 851\,656.63\ \text{N} = 852\ \text{kN} \qquad \textbf{Ans.}$$

After the cross section is slit, $t = 0.025$ m.

$$\tau_{allow} = \frac{VQ_{max}}{It}; \qquad 75(10^6) = \frac{V_s(0.6484375)(10^{-3})}{98.1771(10^{-6})(0.025)}$$

$$V_s = 283\,885.54\ \text{N} = 284\ \text{kN} \qquad \textbf{Ans.}$$

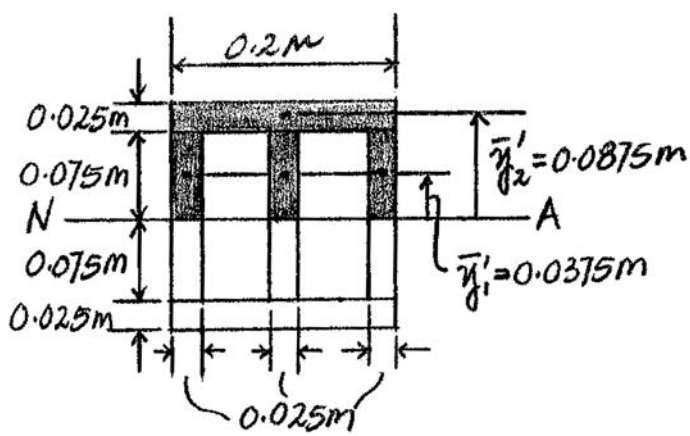

(a)

7–30. The beam has a rectangular cross section and is subjected to a load P that is just large enough to develop a fully plastic moment $M_p = PL$ at the fixed support. If the material is elastic-plastic, then at a distance $x < L$ the moment $M = Px$ creates a region of plastic yielding with an associated elastic core having a height $2y'$. This situation has been described by Eq. 6–30 and the moment **M** is distributed over the cross section as shown in Fig. 6–48*e*. Prove that the maximum shear stress developed in the beam is given by $\tau_{\max} = \frac{3}{2}(P/A')$, where $A' = 2y'b$, the cross-sectional area of the elastic core.

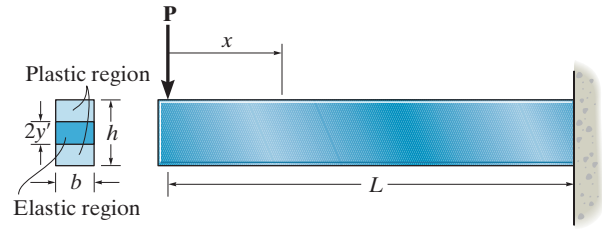

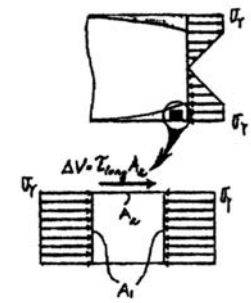

Force Equilibrium: The shaded area indicares the plastic zone. Isolate an element in the plastic zone and write the equation of equilibrium.

$$\pm\Sigma F_x = 0; \qquad \tau_{\text{long}} A_2 + \sigma_\gamma A_1 - \sigma_\gamma A_1 = 0$$

$$\tau_{\text{long}} = 0$$

This proves that the longitudinal shear stress. τ_{long}, is equal to zero. Hence the corresponding transverse stress, $\tau_{\max}$, is also equal to zero in the plastic zone. Therefore, the shear force $V = P$ is carried by the material only in the elastic zone.

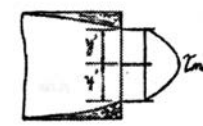

Section Properties:

$$I_{NA} = \frac{1}{12}(b)(2y')^3 = \frac{2}{3}b\,y'^3$$

$$Q_{\max} = \bar{y}'\,A' = \frac{y'}{2}(y')(b) = \frac{y'^2 b}{2}$$

Maximum Shear Stress: Applying the shear formula

$$\tau_{\max} = \frac{VQ_{\max}}{It} = \frac{V\left(\frac{y'^2 b}{2}\right)}{\left(\frac{2}{3}by'^3\right)(b)} = \frac{3P}{4by'}$$

However, $\qquad A' = 2by' \qquad$ hence

$$\tau_{\max} = \frac{3P}{2A'}, \qquad \text{(Q.E.D.)}$$

7–31. The beam in Fig. 6–48*f* is subjected to a fully plastic moment $\mathbf{M}_p$. Prove that the longitudinal and transverse shear stresses in the beam are zero. *Hint:* Consider an element of the beam as shown in Fig. 7–4*c*.

Force Equilibrium: If a fully plastic moment acts on the cross section, then an element of the material taken from the top or bottom of the cross section is subjected to the loading shown. For equilibrium

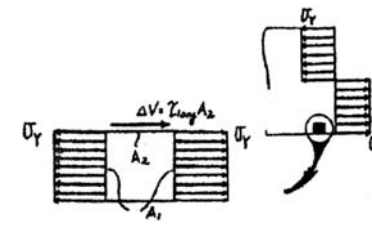

$$\pm\ \Sigma F_x = 0; \qquad \sigma_\gamma A_1 + \tau_{\text{long}} A_2 - \sigma_\gamma A_1 = 0$$

$$\tau_{\text{long}} = 0$$

Thus no shear stress is developed on the longitudinal or transverse plane of the element. (*Q. E. D.*)

***7–32.** The beam is constructed from two boards fastened together at the top and bottom with two rows of nails spaced every 6 in. If each nail can support a 500-lb shear force, determine the maximum shear force V that can be applied to the beam.

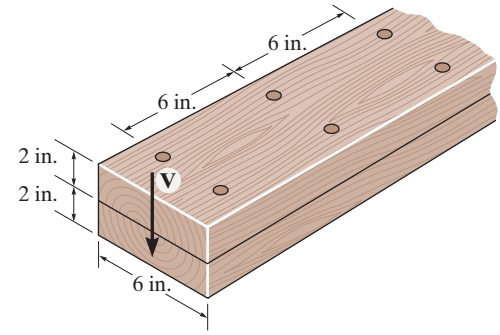

Section Properties:

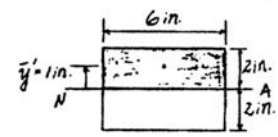

$$I = \frac{1}{12}(6)\left(4^3\right) = 32.0 \text{ in}^4$$

$$Q = \bar{y}'A' = 1(6)(2) = 12.0 \text{ in}^4$$

Shear Flow: There are two rows of nails. Hence, the allowable shear flow $q = \dfrac{2(500)}{6} = 166.67 \text{ lb/in.}$

$$q = \frac{VQ}{I}$$

$$166.67 = \frac{V(12.0)}{32.0}$$

$$V = 444 \text{ lb}$$ **Ans.**

7–33. The beam is constructed from two boards fastened together at the top and bottom with two rows of nails spaced every 6 in. If an internal shear force of $V = 600$ lb is applied to the boards, determine the shear force resisted by each nail.

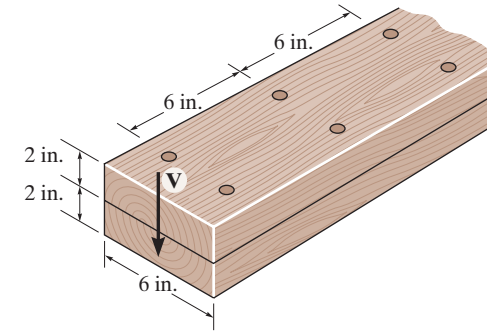

Section Properties:

$$I = \frac{1}{12}(6)\left(4^3\right) = 32.0 \text{ in}^4$$

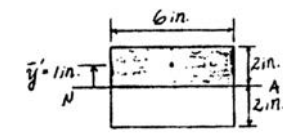

$$Q = \bar{y}'A' = 1(6)(2) = 12.0 \text{ in}^4$$

Shear Flow:

$$q = \frac{VQ}{I} = \frac{600(12.0)}{32.0} = 225 \text{ lb/in.}$$

There are two rows of nails. Hence, the shear force resisted by each nail is

$$F = \left(\frac{q}{2}\right)s = \left(\frac{225 \text{ lb/in.}}{2}\right)(6 \text{ in.}) = 675 \text{ lb}$$ **Ans.**

Ans:
$F = 675$ lb

7–34. The boards are glued together to form the built-up beam. If the wood has an allowable shear stress of $\tau_{\text{allow}} = 3$ MPa, and the glue seam at B can withstand a maximum shear stress of 1.5 MPa, determine the maximum allowable internal shear **V** that can be developed in the beam.

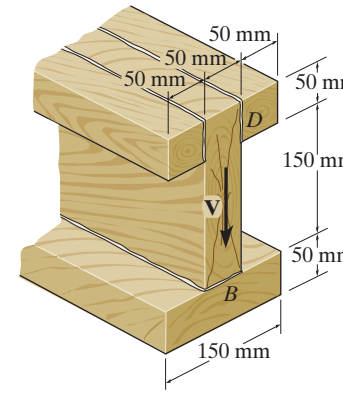

The moment of inertia of the cross section about the neutral axis is

$$I = \frac{1}{12}(0.15)(0.25^3) - \frac{1}{12}(0.1)(0.15^3) = 0.1671875(10^3)\ \text{m}^4$$

Then

$$Q_{\max} = 0.1(0.05)(0.15) + (0.0375)(0.075)(0.05) = 0.890625(10^{-3})\ \text{m}^3$$

$$Q_B = 0.1(0.05)(0.15) = 0.75(10^{-3})\ \text{m}^3$$

The maximum shear stress occurs at the points on the neutral axis where Q is a maximum and $t = 0.05$ m is the smallest.

$$(\tau_{\text{allow}})_w = \frac{VQ_{\max}}{It};\quad 3(10^6) = \frac{V\left[0.890625(10^{-3})\right]}{0.1671875(10^{-3})(0.05)}$$

$$V = 28{,}157\ \text{N}$$

For the glue seam at B,

$$(\tau_{\text{allow}})_g = \frac{VQ_B}{It};\quad 1.5(10^6) = \frac{V\left[0.75(10^{-3})\right]}{0.1671875(10^{-3})(0.05)}$$

$$V = 16{,}719\ \text{N} = 16.7\ \text{kN (Controls)}$$ **Ans.**

Ans:
$V = 16.7$ kN

7–35. The boards are glued together to form the built-up beam. If the wood has an allowable shear stress of $\tau_{\text{allow}} = 3$ MPa, and the glue seam at D can withstand a maximum shear stress of 1.5 MPa, determine the maximum allowable shear **V** that can be developed in the beam.

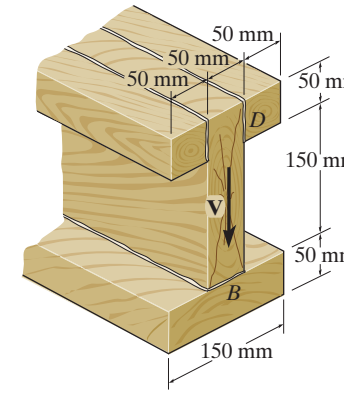

The moment of inertia of the cross section about the neutral axis is

$$I = \frac{1}{12}(0.15)(0.25^3) - \frac{1}{12}(0.1)(0.15^3) = 0.1671875(10^3)\ \text{m}^4$$

Then

$$Q_{\max} = 0.1(0.05)(0.15) + (0.0375)(0.075)(0.05) = 0.890625(10^{-3})\ \text{m}^3$$

$$Q_D = 0.1(0.05)(0.05) = 0.25(10^{-3})\ \text{m}^3$$

The maximum shear stress occurs at the points on the neutral axis where Q is a maximum and $t = 0.05$ m is the smallest.

$$(\tau_{\text{allow}})_w = \frac{VQ_{\max}}{It}; \quad 3(10^6) = \frac{V\left[0.890625(10^{-3})\right]}{0.1671875(10^{-3})(0.05)}$$

$$V = 28{,}158\ \text{N} = 28.2\ \text{kN (Controls)}$$ **Ans.**

For the glue seam at D,

$$(\tau_{\text{allow}})_g = \frac{VQ_B}{It}; \quad 1.5(10^6) = \frac{V\left[0.25(10^{-3})\right]}{0.1671875(10^{-3})(0.05)}$$

$$V = 50{,}156\ \text{N}$$

Ans:
$V = 28.2$ kN

***7–36.** Three identical boards are bolted together to form the built-up beam. Each bolt has a shear strength of 1.5 kip and the bolts are spaced at a distance of $s = 6$ in. If the wood has an allowable shear stress of $\tau_{\text{allow}} = 450$ psi, determine the maximum allowable internal shear **V** that can act on the beam.

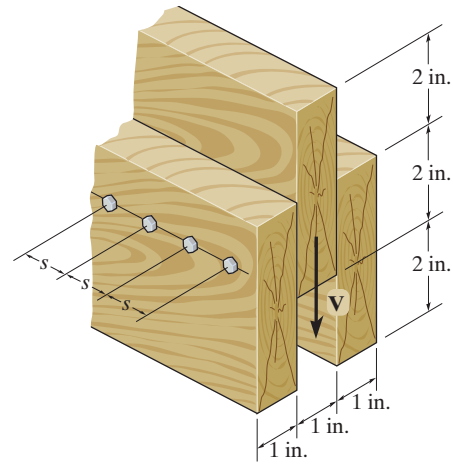

Section Properties: The neutral axis passes through the centroid C of the cross section as shown in Fig. a. The location of C is

$$\bar{y} = \frac{\Sigma \bar{y} A}{\Sigma A} = \frac{2[2(4)(1)] + 4(4)(1)}{2(4)(1) + 4(1)} = 2.6667 \text{ in.}$$

Thus, the moment of inertia of the cross section about the neutral axis is

$$I = 2\left[\frac{1}{12}(1)(4^3) + 1(4)(2.6667 - 2)^2\right] + \frac{1}{12}(1)(4^3) + 1(4)(4 - 2.6667)^2$$

$$= 26.6667 \text{ in}^4$$

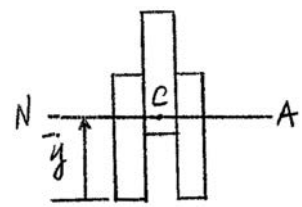

(a)

Here, Q_B can be computed by referring to Fig. b, which is

$$Q_B = \bar{y}'_1 A'_1 = 1.3333(4)(1) = 5.3333 \text{ in}^3$$

Referring to Fig. c, Q_D and $Q_{\max}$ are

$$Q_D = \bar{y}'_3 A'_3 = 2.3333(2)(1) = 4.6667 \text{ in}^3$$

$$Q_{\max} = \bar{y}'_2 A'_2 + \bar{y}'_3 A'_3 = 0.6667(1.3333)(3) + 2.3333(2)(1) = 7.3333 \text{ in}^3$$

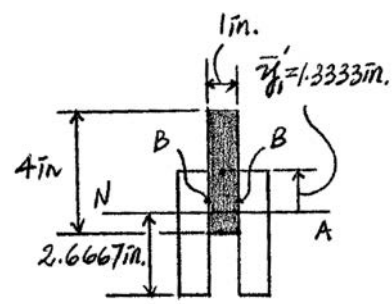

(b)

Shear Stress: The maximum shear stress occurs at either point D or points on the neutral axis. For point D, $t = 1$ in.

$$\tau_{\text{allow}} = \frac{VQ_D}{It}; \qquad 450 = \frac{V(4.6667)}{26.6667(1)}$$

$$V = 2571.43 \text{ lb} = 2571 \text{ lb}$$

For the points on the neutral axis, $t = 3(1) = 3$ in. and so

$$\tau_{\text{allow}} = \frac{VQ_{\max}}{It}; \qquad 450 = \frac{V(7.3333)}{26.6667(3)}$$

$$V = 4909.09 \text{ lb}$$

Shear Flow: Since each bolt has two shear planes, $q_{\text{allow}} = 2\left(\frac{F}{s}\right) = 2\left[\frac{1.5\,(10^3)}{6}\right] = 500$ lb/in.

$$q_{\text{allow}} = \frac{VQ_B}{I}; \qquad 500 = \frac{V(5.3333)}{26.6667}$$

$$V = 2500 \text{ lb (Controls)} \qquad \textbf{Ans.}$$

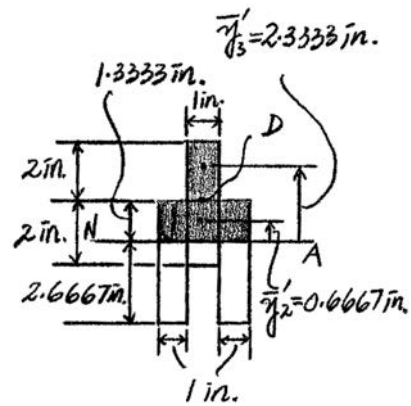

(c)

7–37. Three identical boards are bolted together to form the built-up beam. If the wood has an allowable shear stress of $\tau_{\text{allow}} = 450$ psi, determine the maximum allowable internal shear **V** that can act on the beam. Also, find the corresponding average shear stress in the $\frac{3}{8}$ in. diameter bolts which are spaced equally at $s = 6$ in.

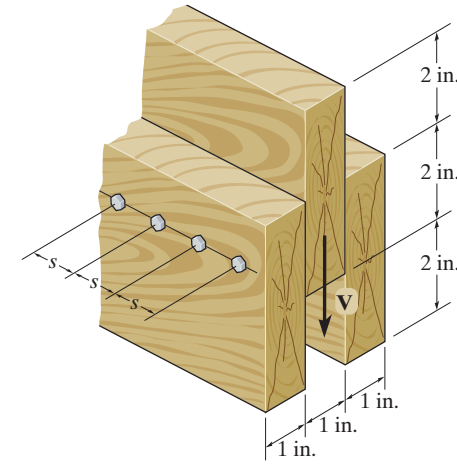

Section Properties: The neutral axis passes through the centroid c of the cross section as shown in Fig. a. The location of c is

$$\bar{y} = \frac{\Sigma \bar{y} A}{\Sigma A} = \frac{2[2(4)(1)] + 4(4)(1)}{2(4)(1) + 4(1)} = 2.6667 \text{ in.}$$

Thus, the moment of inertia of the cross section about the neutral axis is

$$I = 2\left[\frac{1}{12}(1)(4^3) + 1(4)(2.6667 - 2)^2\right] + \frac{1}{12}(1)(4^3) + 1(4)(4 - 2.6667)^2$$

$$= 26.6667 \text{ in}^4$$

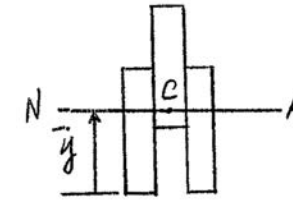

(a)

Here, Q_B can be computed by referring to Fig. b, which is

$$Q_B = \bar{y}'_1 A'_1 = 1.3333(4)(1) = 5.3333 \text{ in}^3$$

Referring to Fig. c, Q_D and $Q_{\max}$ are

$$Q_D = \bar{y}'_3 A'_3 = 2.3333(2)(1) = 4.6667 \text{ in}^3$$

$$Q_{\max} = \bar{y}'_2 A'_2 + \bar{y}'_3 A'_3 = 0.6667(1.3333)(3) + 2.3333(2)(1) = 7.3333 \text{ in}^3$$

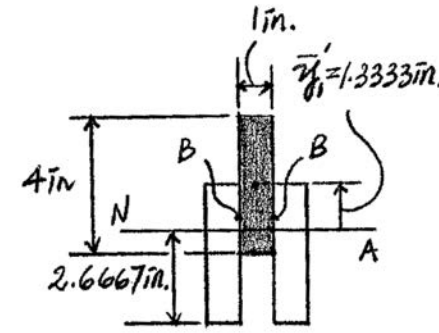

(b)

Shear Stress: The maximum shear stress occurs at either point D or points on the neutral axis. For point D, $t = 1$ in.

$$\tau_{\text{allow}} = \frac{VQ_D}{It}; \qquad 450 = \frac{V(4.6667)}{26.6667(1)}$$

$$V = 2571.43 \text{ lb} = 2.57 \text{ kip (Controls)} \qquad \textbf{Ans.}$$

For the points on the neutral axis, $t = 3(1) = 3$ in, and so

$$\tau_{\text{allow}} = \frac{VQ_{\max}}{It}; \qquad 450 = \frac{V(7.3333)}{26.6667(3)}$$

$$V = 4909.09 \text{ lb}$$

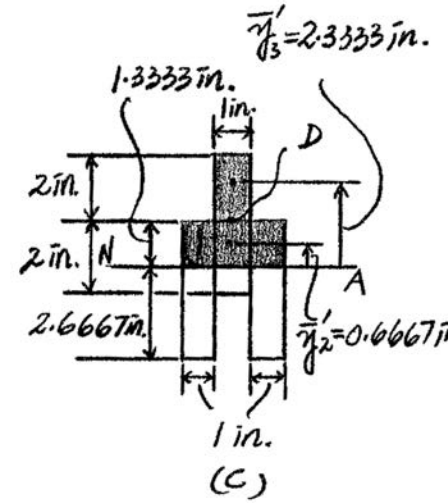

(c)

Shear Flow: Since each bolt has two shear planes, $q = 2\left(\frac{F}{s}\right) = 2\left(\frac{F}{6}\right) = \frac{F}{3}$.

$$q = \frac{VQ_B}{I}; \qquad \frac{F}{3} = \frac{2571.43(5.3333)}{26.6667}$$

$$F = 1542.86 \text{ lb}$$

Thus, the shear stress developed in the bolt is

$$\tau_b = \frac{F}{A_b} = \frac{1542.86}{\frac{\pi}{4}\left(\frac{3}{8}\right)^2} = 14.0 \text{ ksi} \qquad \textbf{Ans.}$$

Ans:
$V = 2571$ lb, $\tau_b = 14.0$ ksi

7–38. The beam is subjected to a shear of $V = 2$ kN. Determine the average shear stress developed in each nail if the nails are spaced 75 mm apart on each side of the beam. Each nail has a diameter of 4 mm.

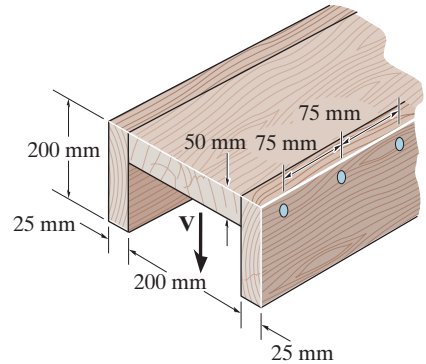

The neutral axis passes through centroid C of the cross-section as shown in Fig. a.

$$\bar{y} = \frac{\Sigma\, \tilde{y}\, A}{\Sigma A} = \frac{0.175(0.05)(0.2) + 0.1(0.2)(0.05)}{0.05(0.2) + 0.2(0.05)} = 0.1375 \text{ m}$$

Thus,

$$I = \frac{1}{12}(0.2)(0.05^3) + 0.2\,(0.05)(0.175 - 0.1375)^2$$
$$+ \frac{1}{12}(0.05)(0.2^3) + 0.05(0.2)(0.1375 - 0.1)^2$$
$$= 63.5417(10^{-6}) \text{ m}^4$$

Q for the shaded area shown in Fig. b is

$$Q = \bar{y}'A' = 0.0375\,(0.05)(0.2) = 0.375(10^{-3}) \text{ m}^3$$

Since there are two rows of nails $q = 2\left(\frac{F}{s}\right) = \frac{2F}{0.075} = (26.67\,F)$ N/m.

$$q = \frac{VQ}{I}; \qquad 26.67\,F = \frac{2000\left[0.375\,(10^{-3})\right]}{63.5417\,(10^{-6})}$$

$$F = 442.62 \text{ N}$$

Thus, the shear stress developed in the nail is

$$\tau_n = \frac{F}{A} = \frac{442.62}{\frac{\pi}{4}(0.004^2)} = 35.22(10^6) \text{ Pa} = 35.2 \text{ MPa}$$ **Ans.**

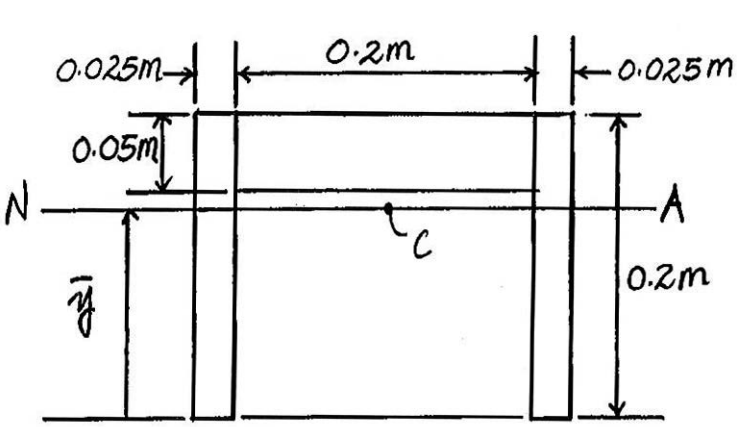

(a)

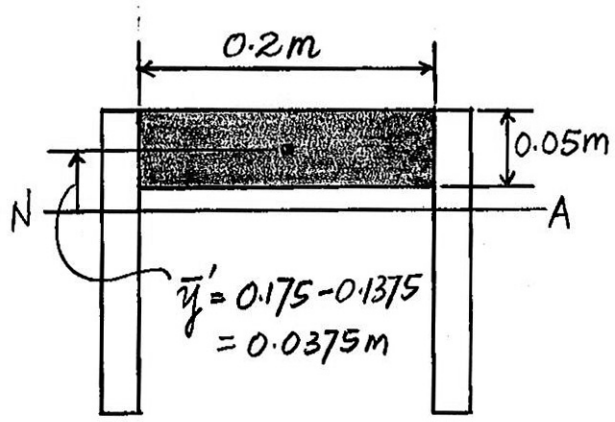

(b)

Ans:
$\tau = 35.2$ MPa

7–39. A beam is constructed from three boards bolted together as shown. Determine the shear force developed in each bolt if the bolts are spaced $s = 250\text{ mm}$ apart and the applied shear is $V = 35\text{ kN}$.

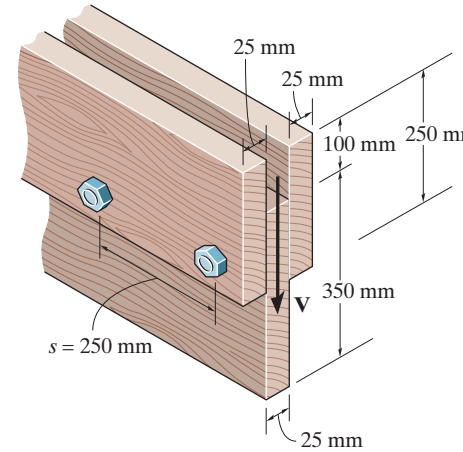

$$\bar{y} = \frac{2\,(0.125)(0.25)(0.025) + 0.275\,(0.35)(0.025)}{2\,(0.25)(0.025) + 0.35\,(0.025)} = 0.18676\text{ m}$$

$$I = (2)\left(\frac{1}{12}\right)(0.025)(0.25^3) + 2\,(0.025)(0.25)(0.18676 - 0.125)^2$$

$$+ \frac{1}{12}(0.025)(0.35)^3 + (0.025)(0.35)(0.275 - 0.18676)^2$$

$$= 0.270236\,(10^{-3})\text{ m}^4$$

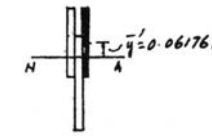

$$Q = \bar{y}'A' = 0.06176(0.025)(0.25) = 0.386(10^{-3})\text{ m}^3$$

$$q = \frac{VQ}{I} = \frac{35\,(0.386)(10^{-3})}{0.270236\,(10^{-3})} = 49.997\text{ kN/m}$$

$$F = q(s) = 49.997\,(0.25) = 12.5\text{ kN}$$ **Ans.**

Ans:
$F = 12.5\text{ kN}$

***7–40.** The simply supported beam is built-up from three boards by nailing them together as shown. The wood has an allowable shear stress of $\tau_{allow} = 1.5$ MPa, and an allowable bending stress of $\sigma_{allow} = 9$ MPa. The nails are spaced at $s = 75$ mm, and each has a shear strength of 1.5 kN. Determine the maximum allowable force **P** that can be applied to the beam.

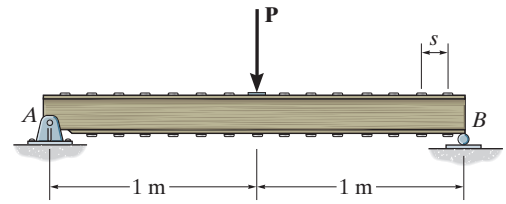

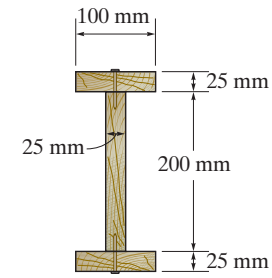

Support Reactions: As shown on the free-body diagram of the beam shown in Fig. *a*.

Maximum Shear and Moment: The shear diagram is shown in Fig. *b*. As indicated, $V_{max} = \frac{P}{2}$.

Section Properties: The moment of inertia of the cross section about the neutral axis is

$$I = \frac{1}{12}(0.1)(0.25^3) - \frac{1}{12}(0.075)(0.2^3)$$

$$= 80.2083(10^{-6})\ \text{m}^4$$

Referring to Fig. *d*,

$$Q_B = \bar{y}_2' A_2' = 0.1125(0.025)(0.1) = 0.28125(10^{-3})\ \text{m}^3$$

Shear Flow: Since there is only one row of nails, $q_{allow} = \frac{F}{s} = \frac{1.5(10^3)}{0.075} = 20(10^3)\ \text{N/m}$.

$$q_{allow} = \frac{V_{max} Q_B}{I}; \qquad 20(10^3) = \frac{\frac{P}{2}\left[0.28125(10^{-3})\right]}{80.2083(10^{-6})}$$

$$P = 11417.41\ \text{N} = 11.4\ \text{kN (controls)} \qquad \textbf{Ans.}$$

Bending,

$$\sigma_{max} = \frac{Mc}{I}$$

$$\sigma(10^6)\ \text{N/m}^2 = \frac{\left(\frac{P}{2}\right)(0.125\ \text{m})}{80.2083(10^{-6})\ \text{m}^4}$$

$$P = 11.550\ \text{N} = 11.55\ \text{kN}$$

Shear,

$$\tau_{max} = \frac{VQ}{It}$$

$$Q = (0.1125)(0.025)(0.1) + (0.05)(0.1)(0.025)$$

$$= 0.40625(10^{-3})\ \text{m}^3$$

$$1.5\left(10^6\right) = \frac{\left(\frac{P}{2}\right)(0.40625)(10^{-3})\ \text{m}^3}{80.2083(10^{-6})\ \text{m}^4(0.025\ \text{m})}$$

$$P = 14.808\ \text{N} = 14.8\ \text{kN}$$

7–40. Continued

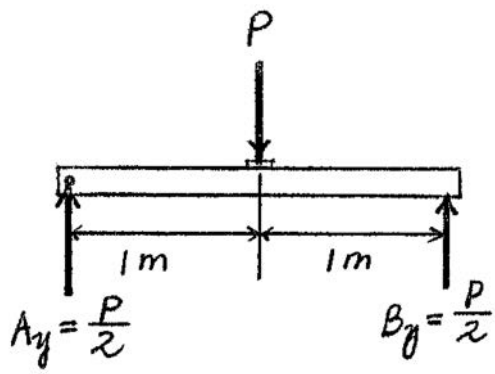

(a)

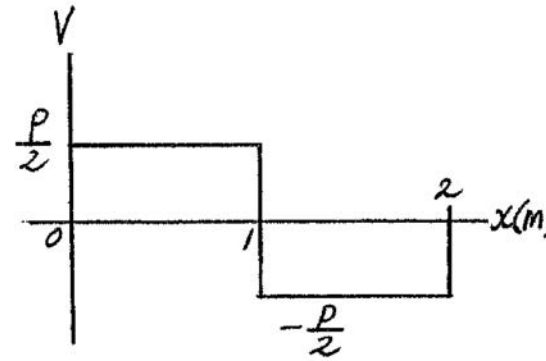

(b)

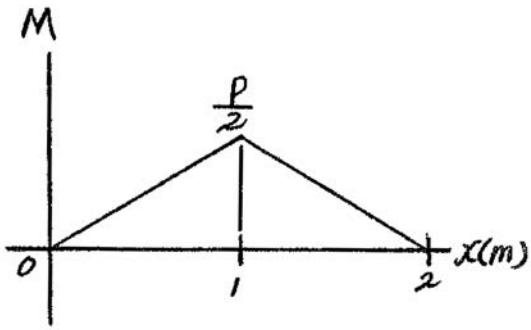

(c)

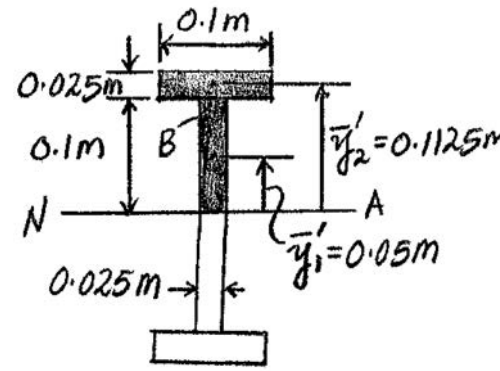

(d)

7–41. The simply supported beam is built-up from three boards by nailing them together as shown. If $P = 12$ kN, determine the maximum allowable spacing s of the nails to support that load, if each nail can resist a shear force of 1.5 kN.

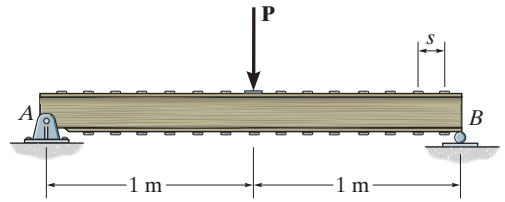

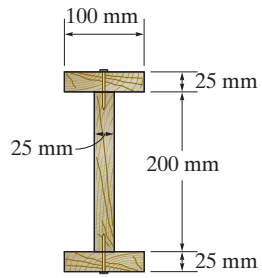

Support Reactions: As shown on the free-body diagram of the beam shown in Fig. *a*.

Maximum Shear and Moment: The shear diagram is shown in Fig. *b*. As indicated,

$$V_{\max} = \frac{P}{2} = \frac{12}{2} = 6 \text{ kN}.$$

Section Properties: The moment of inertia of the cross section about the neutral axis is

$$I = \frac{1}{12}(0.1)(0.25^3) - \frac{1}{12}(0.075)(0.2^3)$$

$$= 80.2083(10^{-6}) \text{ m}^4$$

Referring to Fig. *d*,

$$Q_B = \bar{y}'_2 A'_2 = 0.1125(0.025)(0.1) = 0.28125(10^{-3}) \text{ m}^3$$

Shear Flow: Since there is only one row of nails, $q_{\text{allow}} = \dfrac{F}{s} = \dfrac{1.5(10^3)}{s}$.

$$q_{\text{allow}} = \frac{V_{\max} Q_B}{I}; \qquad \frac{1.5(10^3)}{s} = \frac{6000\left[0.28125(10^{-3})\right]}{80.2083(10^{-6})}$$

Ans. $$s = 0.07130 \text{ m} = 71.3 \text{ mm}$$

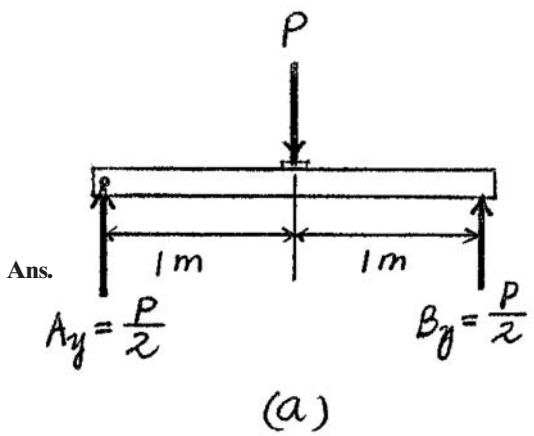

(a)

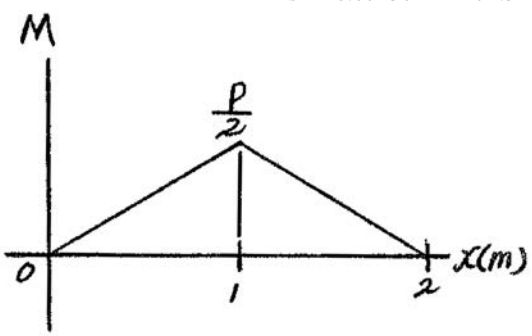

(c)

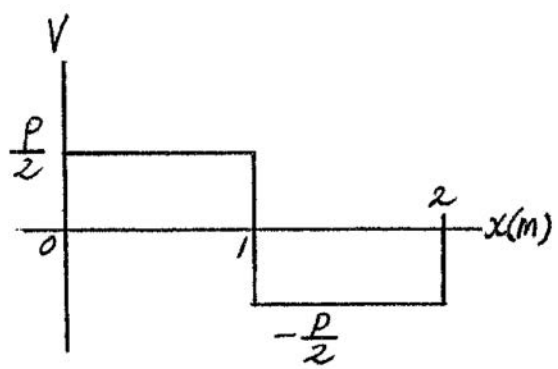

(b)

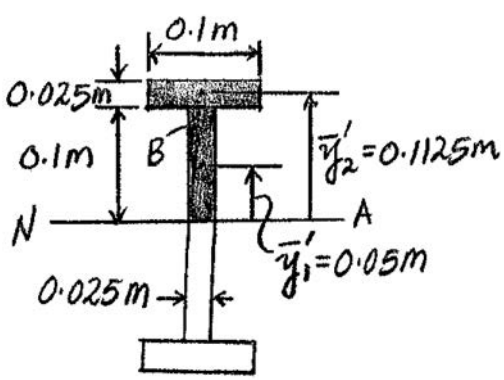

(d)

Ans:
$s = 71.3$ mm

7–42. The T-beam is constructed together as shown. If the nails can each support a shear force of 950 lb, determine the maximum shear force V that the beam can support and the corresponding maximum nail spacing s to the nearest $\frac{1}{8}$ in. The allowable shear stress for the wood is $\tau_{\text{allow}} = 450$ psi.

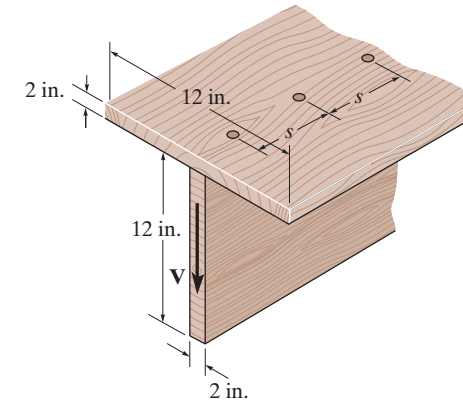

The neutral axis passes through the centroid c of the cross section as shown in Fig. a.

$$\bar{y} = \frac{\Sigma\, \tilde{y}\, A}{\Sigma A} = \frac{13(2)(12) + 6(12)(2)}{2(12) + 12(2)} = 9.5 \text{ in.}$$

$$I = \frac{1}{12}(2)(12^3) + 2(12)(9.5 - 6)^2$$

$$+ \frac{1}{12}(12)(2^3) + 12(2)(13 - 9.5)^2$$

$$= 884 \text{ in}^4$$

Referring to Fig. a, $Q_{\max}$ and Q_A are

$$Q_{\max} = \bar{y}_1' A_1' = 4.75(9.5)(2) = 90.25 \text{ in}^3$$

$$Q_A = \bar{y}_2' A_2' = 3.5\,(2)(12) = 84 \text{ in}^3$$

The maximum shear stress occurs at the points on the neutral axis where Q is maximum and $t = 2$ in.

$$\tau_{\text{allow}} = \frac{VQ_{\max}}{It}; \qquad 450 = \frac{V\,(90.25)}{884\,(2)}$$

$$V = 8815.51 \text{ lb} = 8.82 \text{ kip} \qquad \textbf{Ans.}$$

Here, $q_{\text{allow}} = \dfrac{F}{s} = \dfrac{950}{s}$ lb/in. Then

$$q_{\text{allow}} = \frac{VQ_A}{I}; \qquad \frac{950}{s} = \frac{8815.51(84)}{884}$$

$$s = 1.134 \text{ in} = 1\frac{1}{8} \text{ in} \qquad \textbf{Ans.}$$

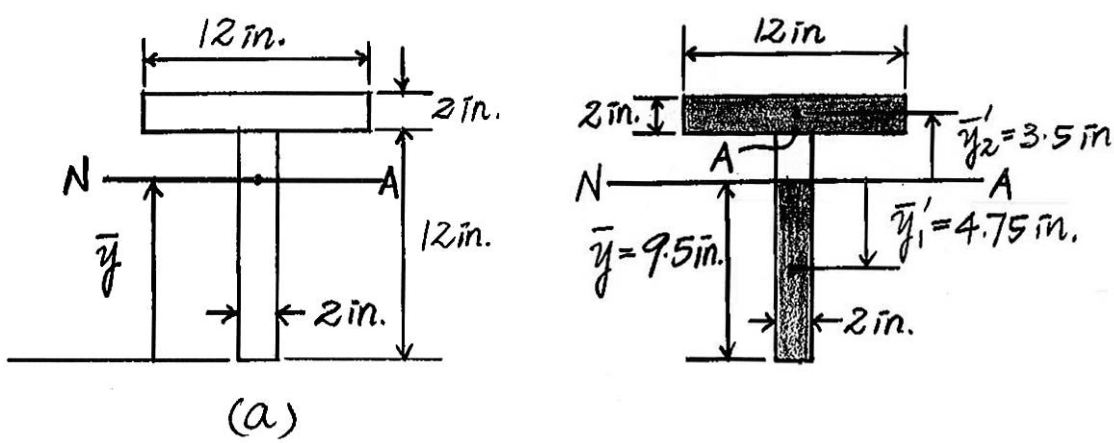

Ans:
$V = 8.82$ kip, use $s = 1\frac{1}{8}$ in.

7–43. The box beam is made from four pieces of plastic that are glued together as shown. If the glue has an allowable strength of 400 lb/in^2, determine the maximum shear the beam will support.

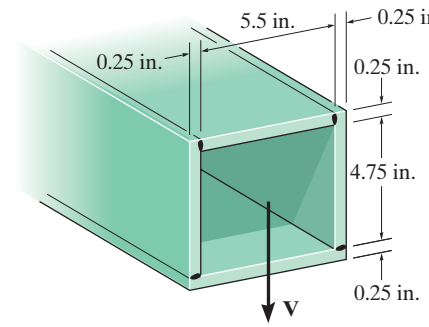

$$I = \frac{1}{12}(6)(5.25^3) - \frac{1}{12}(5.5)(4.75^3) = 23.231 \text{ in}^4$$

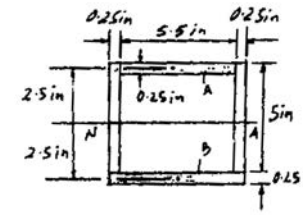

$$Q_B = \bar{y}'A' = 2.5(6)(0.25) = 3.75 \text{ in}^3$$

The beam will fail at the glue joint for board B since Q is a maximum for this board.

$$\tau_{\text{allow}} = \frac{VQ_B}{It}; \qquad 400 = \frac{V(3.75)}{23.231(2)(0.25)}$$

$V = 1239 \text{ lb} = 1.24 \text{ kip}$ **Ans.**

Ans:
$V = 1.24$ kip

***7–44.** The box beam is made from four pieces of plastic that are glued together as shown. If $V = 2$ kip, determine the shear stress resisted by the seam at each of the glued joints.

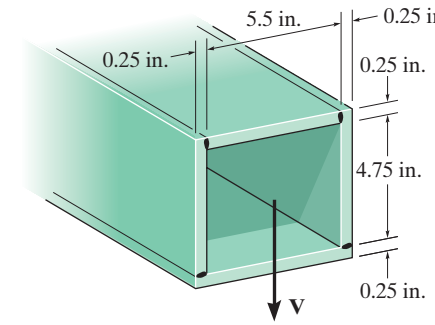

$$I = \frac{1}{12}(6)(5.25^3) - \frac{1}{12}(5.5)(4.75^3) = 23.231 \text{ in}^4$$

$$Q_B = \bar{y}'A' = 2.5(6)(0.25) = 3.75 \text{ in}^3$$

$$Q_A = 2.5(5.5)(0.25) = 3.4375$$

$$\tau_B = \frac{VQ_B}{It} = \frac{2(10^3)(3.75)}{23.231(2)(0.25)} = 646 \text{ psi}$$ **Ans.**

$$\tau_A = \frac{VQ_A}{It} = \frac{2(10^3)(3.4375)}{23.231(2)(0.25)} = 592 \text{ psi}$$ **Ans.**

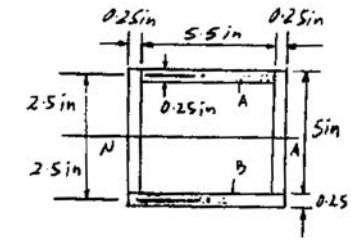

7–45. A beam is constructed from four boards which are nailed together. If the nails are on both sides of the beam and each can resist a shear of 3 kN, determine the maximum load P that can be applied to the end of the beam.

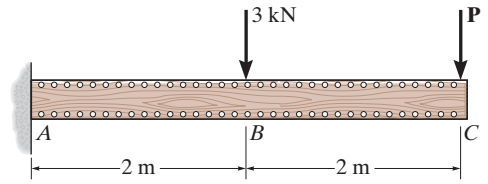

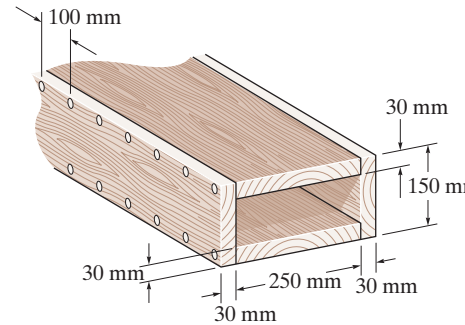

Support Reactions: As shown on FBD.

Internal Shear Force: As shown on shear diagram, $V_{AB} = (P + 3)$ kN.

Section Properties:

$$I_{NA} = \frac{1}{12}(0.31)\left(0.15^3\right) - \frac{1}{12}(0.25)\left(0.09^3\right)$$
$$= 72.0\left(10^{-6}\right)\text{ m}^4$$

$$Q = \bar{y}'A' = 0.06(0.25)(0.03) = 0.450\left(10^{-3}\right)\text{ m}^3$$

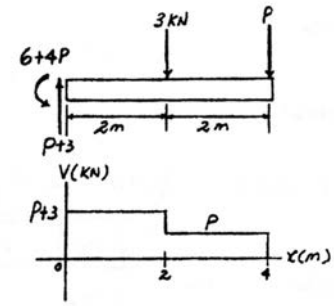

Shear Flow: There are two rows of nails. Hence the allowable shear flow is $q = \dfrac{3(2)}{0.1} = 60.0$ kN/m.

$$q = \frac{VQ}{I}$$

$$60.0\left(10^3\right) = \frac{(P + 3)(10^3)0.450(10^{-3})}{72.0(10^{-6})}$$

$$P = 6.60\text{ kN}$$ **Ans.**

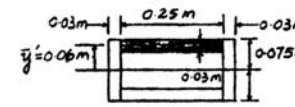

Ans:
$P = 6.60$ kN

7–46. The beam is subjected to a shear of $V = 800$ N. Determine the average shear stress developed in the nails along the sides A and B if the nails are spaced $s = 100$ mm apart. Each nail has a diameter of 2 mm.

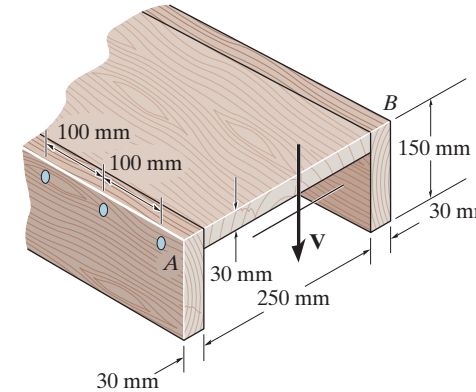

$$\bar{y} = \frac{0.015(0.03)(0.25) + 2(0.075)(0.15)(0.03)}{0.03(0.25) + 2(0.15)(0.03)} = 0.04773 \text{ m}$$

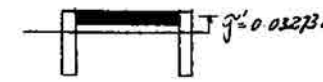

$$I = \frac{1}{12}(0.25)(0.03^3) + (0.25)(0.03)(0.04773 - 0.015)^2$$

$$+ (2)\left(\frac{1}{12}\right)(0.03)(0.15^3) + 2(0.03)(0.15)(0.075 - 0.04773)^2$$

$$= 32.164773(10^{-6}) \text{ m}^4$$

$$Q = \bar{y}'A' = 0.03273(0.25)(0.03) = 0.245475(10^{-3}) \text{ m}^3$$

$$q = \frac{VQ}{I} = \frac{800(0.245475)(10^{-3})}{32.164773(10^{-6})} = 6105.44 \text{ N/m}$$

$$F = qs = 6105.44(0.1) = 610.544 \text{ N}$$

Since each side of the beam resists this shear force then

$$\tau_{avg} = \frac{F}{2A} = \frac{610.544}{2(\frac{\pi}{4})(0.002^2)} = 97.2 \text{ MPa}$$ **Ans.**

Ans:
$\tau_{avg} = 97.2$ MPa

7–47. The beam is made from four boards nailed together as shown. If the nails can each support a shear force of 100 lb., determine their required spacing s' and s if the beam is subjected to a shear of $V = 700$ lb.

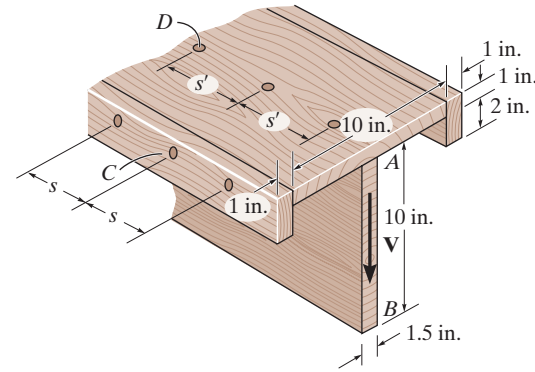

Section Properties:

$$\bar{y} = \frac{\Sigma \bar{y} A}{\Sigma A} = \frac{0.5(10)(1) + 1.5(2)(3) + 6(1.5)(10)}{10(1) + 2(3) + 1.5(10)}$$

$$= 3.3548 \text{ in}$$

$$I_{NA} = \frac{1}{12}(10)\left(1^3\right) + 10(1)(3.3548 - 0.5)^2$$

$$+ \frac{1}{12}(2)\left(3^3\right) + 2(3)(3.3548 - 1.5)^2$$

$$+ \frac{1}{12}(1.5)\left(10^3\right) + (1.5)(10)(6 - 3.3548)^2$$

$$= 337.43 \text{ in}^4$$

$$Q_C = \bar{y}_1' A' = 1.8548(3)(1) = 5.5645 \text{ in}^3$$

$$Q_D = \bar{y}_2' A' = (3.3548 - 0.5)(10)(1) + 2\left[(3.3548 - 1.5)(3)(1)\right] = 39.6774 \text{ in}^3$$

Shear Flow: The allowable shear flow at points C and D is $q_C = \frac{100}{s}$ and $q_B = \frac{100}{s'}$, respectively.

$$q_C = \frac{VQ_C}{I}$$

$$\frac{100}{s} = \frac{700(5.5645)}{337.43}$$

$$s = 8.66 \text{ in.}$$ **Ans.**

$$q_D = \frac{VQ_D}{I}$$

$$\frac{100}{s'} = \frac{700(39.6774)}{337.43}$$

$$s' = 1.21 \text{ in.}$$ **Ans.**

Ans:
$s = 8.66$ in., $s' = 1.21$ in.

***7–48.** The beam is made from three polystyrene strips that are glued together as shown. If the glue has a shear strength of 80 kPa, determine the maximum load P that can be applied without causing the glue to lose its bond.

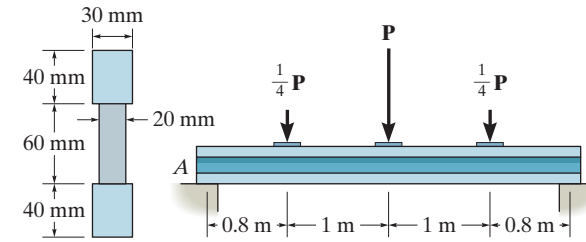

Maximum shear is at the supports.

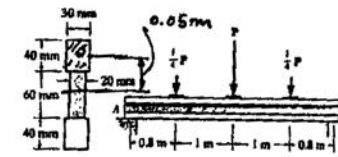

$$V_{\max} = \frac{3P}{4}$$

$$I = \frac{1}{12}(0.02)(0.06)^3 + 2\left[\frac{1}{12}(0.03)(0.04)^3 + (0.03)(0.04)(0.05)^2\right] = 6.68(10^{-6})\ \text{m}^4$$

$$\tau = \frac{VQ}{It}; \qquad 80(10^3) = \frac{(3P/4)(0.05)(0.04)(0.03)}{6.68(10^{-6})(0.02)}$$

$$P = 238\ \text{N} \qquad \textbf{Ans.}$$

7–50. A shear force of $V = 300$ kN is applied to the box girder. Determine the shear flow at points A and B.

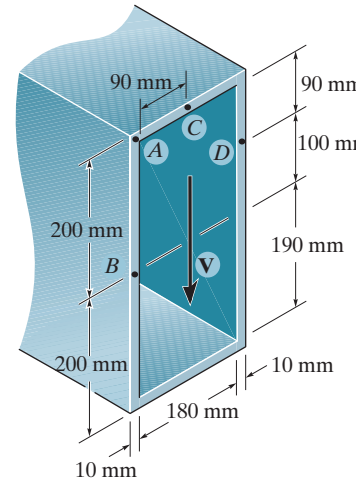

The moment of inertia of the cross section about the neutral axis is

$$I = \frac{1}{12}(0.2)(0.4^3) - \frac{1}{12}(0.18)(0.38^3) = 0.24359(10^{-3})\ \text{m}^4$$

Referring to Fig. *a,* Fig. *b*,

$$Q_A = \bar{y}_1' A_1' = 0.195(0.01)(0.19) = 0.3705(10^{-3})\ \text{m}^3$$

$$Q_B = 2\bar{y}_z' A_2' + \bar{y}_3' A_3' = 2[0.1(0.2)(0.01)] + 0.195(0.01)(0.18) = 0.751(10^{-3})\ \text{m}^3$$

Due to symmetry, the shear flow at points A and A', Fig. *a*, and at points B and B', Fig. *b*, are the same. Thus

$$q_A = \frac{1}{2}\left(\frac{VQ_A}{I}\right) = \frac{1}{2}\left\{\frac{300(10^3)\left[0.3705(10^{-3})\right]}{0.24359(10^{-3})}\right\}$$

$$= 228.15(10^3)\ \text{N/m} = 228\ \text{kN/m} \qquad \textbf{Ans.}$$

$$q_B = \frac{1}{2}\left(\frac{VQ_B}{I}\right) = \frac{1}{2}\left\{\frac{300(10^3)\left[0.751(10^{-3})\right]}{0.24359(10^{-3})}\right\}$$

$$= 462.46(10^3)\ \text{N/m} = 462\ \text{kN/m} \qquad \textbf{Ans}$$

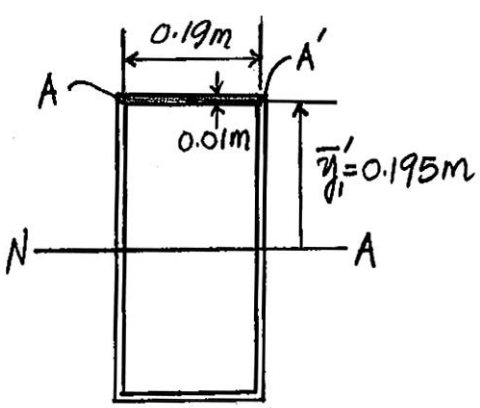

(a)

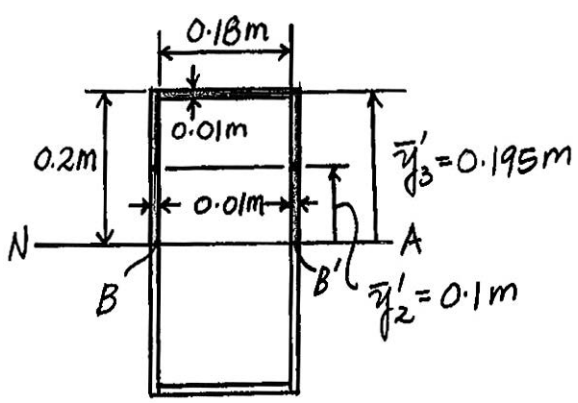

(b)

Ans:
$q_A = 228$ kN/m, $q_B = 462$ kN/m

7–51. A shear force of $V = 450$ kN is applied to the box girder. Determine the shear flow at points C and D.

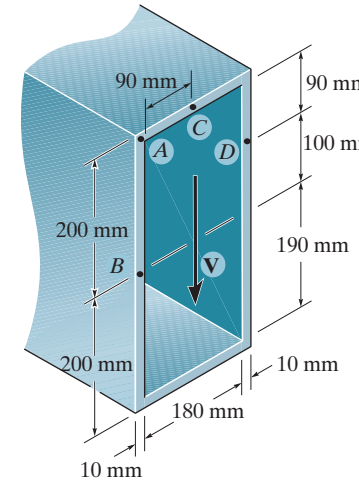

The moment of inertia of the cross section about the neutral axis is

$$I = \frac{1}{12}(0.2)(0.4^3) - \frac{1}{12}(0.18)(0.38^3) = 0.24359(10^{-3})\ \text{m}^4$$

Referring to Fig. a, due to symmetry $A'_C = 0$. Thus

$$Q_C = 0$$

Then referring to Fig. b,

$$Q_D = \bar{y}'_1 A'_1 + \bar{y}'_2 A'_2 = 0.195(0.01)(0.09) + 0.15(0.1)(0.01)$$

$$= 0.3255(10^{-3})\ \text{m}^3$$

Thus,

$$q_C = \frac{VQ_C}{I} = 0 \qquad \textbf{Ans.}$$

$$q_D = \frac{VQ_D}{I} = \frac{450(10^3)\left[0.3255(10^{-3})\right]}{0.24359(10^{-3})}$$

$$= 601.33(10^3)\ \text{N/m} = 601\ \text{kN/m} \qquad \textbf{Ans.}$$

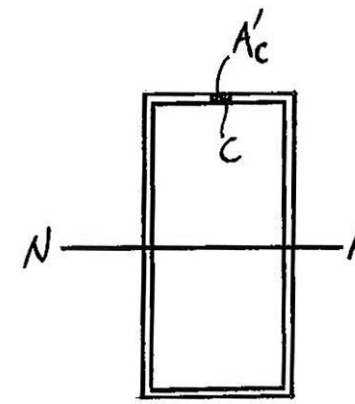

(a)

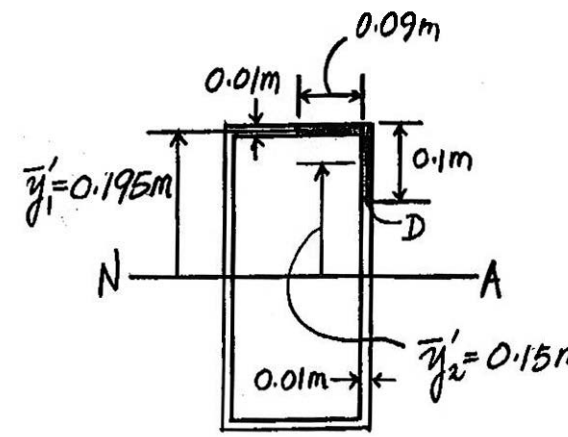

(b)

Ans:
$q_C = 0, q_D = 601$ kN/m

***7–52.** A shear force of $V = 18$ kN is applied to the symmetric box girder. Determine the shear flow at A and B.

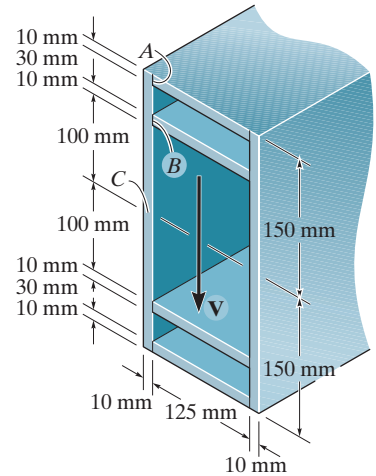

Section Properties:

$$I_{NA} = \frac{1}{12}(0.145)\left(0.3^3\right) - \frac{1}{12}(0.125)\left(0.28^3\right)$$

$$+ 2\left[\frac{1}{12}(0.125)\left(0.01^3\right) + 0.125(0.01)\left(0.105^2\right)\right]$$

$$= 125.17\left(10^{-6}\right)\text{ m}^4$$

$$Q_A = \bar{y}_2' A' = 0.145(0.125)(0.01) = 0.18125\left(10^{-3}\right)\text{ m}^3$$

$$Q_B = \bar{y}_1' A' = 0.105(0.125)(0.01) = 0.13125\left(10^{-3}\right)\text{ m}^3$$

Shear Flow:

$$q_A = \frac{1}{2}\left[\frac{VQ_A}{I}\right]$$

$$= \frac{1}{2}\left[\frac{18(10^3)(0.18125)(10^{-3})}{125.17(10^{-6})}\right]$$

$$= 13033\text{ N/m} = 13.0\text{ kN/m}$$ **Ans.**

$$q_B = \frac{1}{2}\left[\frac{VQ_B}{I}\right]$$

$$= \frac{1}{2}\left[\frac{18(10^3)(0.13125)(10^{-3})}{125.17(10^{-6})}\right]$$

$$= 9437\text{ N/m} = 9.44\text{ kN/m}$$ **Ans.**

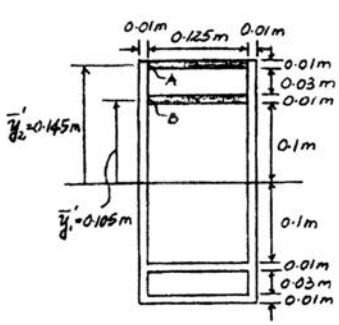

7–53. A shear force of $V = 18$ kN is applied to the box girder. Determine the shear flow at C.

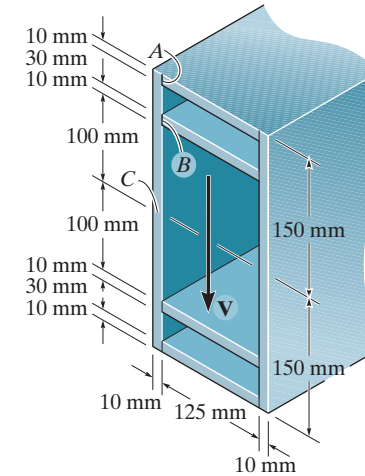

Section Properties:

$$I_{NA} = \frac{1}{12}(0.145)\left(0.3^3\right) - \frac{1}{12}(0.125)\left(0.28^3\right)$$

$$+2\left[\frac{1}{12}(0.125)\left(0.01^3\right) + 0.125(0.01)\left(0.105^2\right)\right]$$

$$= 125.17\left(10^{-6}\right)\ \text{m}^4$$

$$Q_C = \Sigma \bar{y}' A'$$

$$= 0.145(0.125)(0.01) + 0.105(0.125)(0.01) + 0.075(0.15)(0.02)$$

$$= 0.5375\left(10^{-3}\right)\ \text{m}^3$$

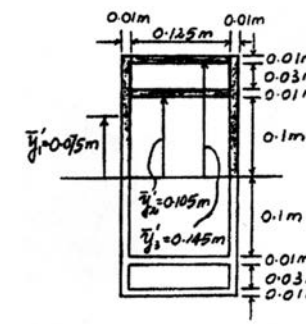

Shear Flow:

$$q_C = \frac{1}{2}\left[\frac{VQ_C}{I}\right]$$

$$= \frac{1}{2}\left[\frac{18(10^3)(0.5375)(10^{-3})}{125.17(10^{-4})}\right]$$

$$= 38648\ \text{N/m} = 38.6\ \text{kN/m}$$ **Ans.**

Ans:
$q_C = 38.6$ kN/m

7–54. The aluminum strut is 10 mm thick and has the cross section shown. If it is subjected to a shear of $V = 150$ N, determine the shear flow at points A and B.

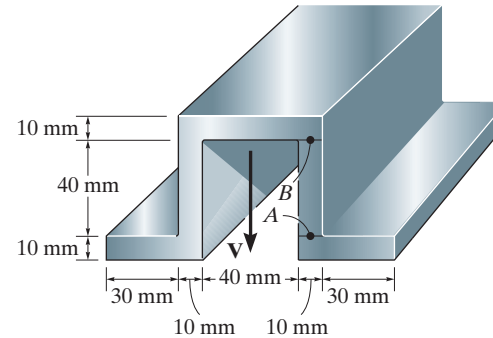

$$\bar{y} = \frac{2[0.005(0.03)(0.01)] + 2[0.03(0.06)(0.01)] + 0.055(0.04)(0.01)}{2(0.03)(0.01) + 2(0.06)(0.01) + 0.04(0.01)} = 0.027727 \text{ m}$$

$$I = 2\left[\frac{1}{12}(0.03)(0.01)^3 + 0.03(0.01)(0.027727 - 0.005)^2\right]$$

$$+ 2\left[\frac{1}{12}(0.01)(0.06)^3 + 0.01(0.06)(0.03 - 0.027727)^2\right]$$

$$+ \frac{1}{12}(0.04)(0.01)^3 + 0.04(0.01)(0.055 - 0.027727)^2 = 0.98197(10^{-6}) \text{ m}^4$$

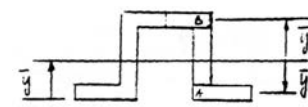

$$\bar{y}_B' = 0.055 - 0.027727 = 0.027272 \text{ m}$$

$$\bar{y}_A' = 0.027727 - 0.005 = 0.022727 \text{ m}$$

$$Q_A = \bar{y}_A' A' = 0.022727(0.04)(0.01) = 9.0909(10^{-6}) \text{ m}^3$$

$$Q_B = \bar{y}_B' A' = 0.027272(0.03)(0.01) = 8.1818(10^{-6}) \text{ m}^3$$

$$q_A = \frac{VQ_A}{I} = \frac{150(9.0909)(10^{-6})}{0.98197(10^{-6})} = 1.39 \text{ kN/m}$$ **Ans.**

$$q_B = \frac{VQ_B}{I} = \frac{150(8.1818)(10^{-6})}{0.98197(10^{-6})} = 1.25 \text{ kN/m}$$ **Ans.**

Ans:
$q_A = 1.39$ kN/m, $q_B = 1.25$ kN/m

7–55. The aluminum strut is 10 mm thick and has the cross section shown. If it is subjected to a shear of $V = 150$ N, determine the maximum shear flow in the strut.

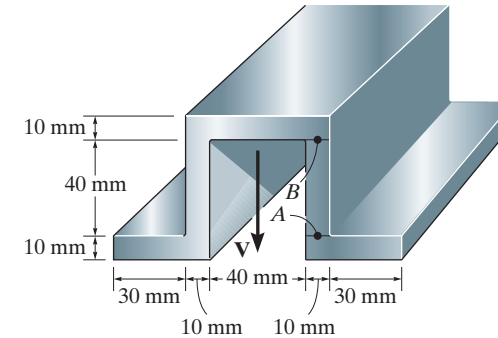

$$\bar{y} = \frac{2[0.005(0.03)(0.01)] + 2[0.03(0.06)(0.01)] + 0.055(0.04)(0.01)}{2(0.03)(0.01) + 2(0.06)(0.01) + 0.04(0.01)}$$

$$= 0.027727 \text{ m}$$

$$I = 2\left[\frac{1}{12}(0.03)(0.01)^3 + 0.03(0.01)(0.027727 - 0.005)^2\right]$$

$$+ 2\left[\frac{1}{12}(0.01)(0.06)^3 + 0.01(0.06)(0.03 - 0.027727)^2\right]$$

$$+ \frac{1}{12}(0.04)(0.01)^3 + 0.04(0.01)(0.055 - 0.027727)^2$$

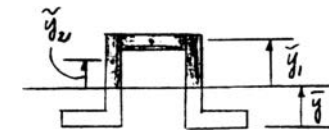

$$= 0.98197(10^{-6}) \text{ m}^4$$

$$Q_{max} = (0.055 - 0.027727)(0.04)(0.01) + 2[(0.06 - 0.027727)(0.01)]\left(\frac{0.06 - 0.0277}{2}\right)$$

$$= 21.3(10^{-6}) \text{ m}^3$$

$$q_{max} = \frac{1}{2}\left(\frac{VQ_{max}}{I}\right) = \frac{1}{2}\left(\frac{150(21.3(10^{-6}))}{0.98197(10^{-6})}\right) = 1.63 \text{ kN/m}$$ **Ans.**

Ans:
$q_{max} = 1.63$ kN/m

***7–56.** The beam is subjected to a shear force of $V = 5$ kip. Determine the shear flow at points A and B.

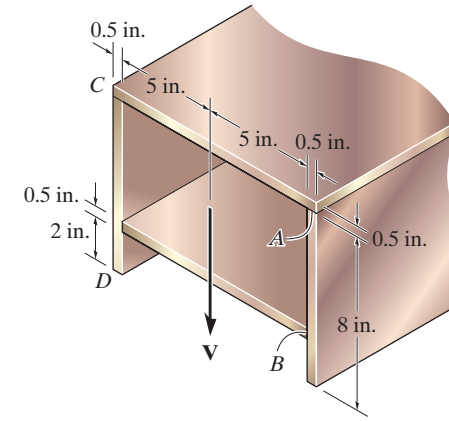

$$\bar{y} = \frac{\Sigma \bar{y} A}{\Sigma A} = \frac{0.25(11)(0.5) + 2[4.5(8)(0.5)] + 6.25(10)(0.5)}{11(0.5) + 2(8)(0.5) + 10(0.5)} = 3.70946 \text{ in.}$$

$$I = \frac{1}{12}(11)(0.5^3) + 11(0.5)(3.70946 - 0.25)^2 + 2\left[\frac{1}{12}(0.5)(8^3) + 0.5(8)(4.5 - 3.70946)^2\right]$$

$$+ \frac{1}{12}(10)(0.5^3) + 10(0.5)(6.25 - 3.70946)^2$$

$$= 145.98 \text{ in}^4$$

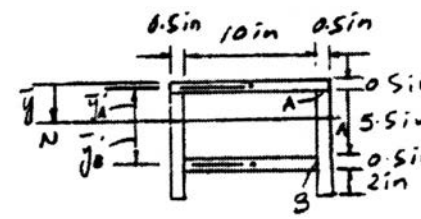

$$\bar{y}'_A = 3.70946 - 0.25 = 3.45946 \text{ in.}$$

$$\bar{y}'_B = 6.25 - 3.70946 = 2.54054 \text{ in.}$$

$$Q_A = \bar{y}'_A A' = 3.45946(11)(0.5) = 19.02703 \text{ in}^3$$

$$Q_B = \bar{y}'_B A' = 2.54054(10)(0.5) = 12.7027 \text{ in}^3$$

$$q_A = \frac{1}{2}\left(\frac{VQ_A}{I}\right) = \frac{1}{2}\left(\frac{5(10^3)(19.02703)}{145.98}\right) = 326 \text{ lb/in.} \qquad \textbf{Ans.}$$

$$q_B = \frac{1}{2}\left(\frac{VQ_B}{I}\right) = \frac{1}{2}\left(\frac{5(10^3)(12.7027)}{145.98}\right) = 218 \text{ lb/in.} \qquad \textbf{Ans.}$$

7–57. The beam is constructed from four plates and is subjected to a shear force of $V = 5$ kip. Determine the maximum shear flow in the cross section.

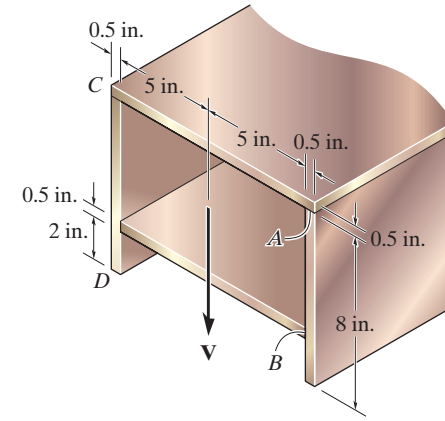

$$\bar{y} = \frac{\Sigma \bar{y} A}{\Sigma A} = \frac{0.25(11)(0.5) + 2[4.5(8)(0.5)] + 6.25(10)(0.5)}{11(0.5) + 2(8)(0.5) + 10(0.5)} = 3.70946 \text{ in.}$$

$$I = \frac{1}{12}(11)(0.5^3) + 11(0.5)(3.4595^2) + 2\left[\frac{1}{12}(0.5)(8^3) + 0.5(8)(0.7905^2)\right]$$

$$+ \frac{1}{12}(10)(0.5^3) + 10(0.5)(2.5405^2)$$

$$= 145.98 \text{ in}^4$$

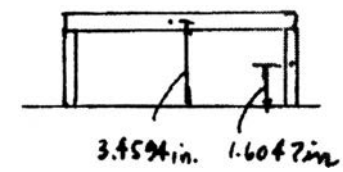

$$Q_{\max} = 3.4594\,(11)(0.5) + 2[(1.6047)(0.5)(3.7094 - 0.5)]$$

$$= 24.177 \text{ in}^3$$

$$q_{\max} = \frac{1}{2}\left(\frac{VQ_{\max}}{I}\right) = \frac{1}{2}\left(\frac{5(10^3)(24.177)}{145.98}\right)$$

$$= 414 \text{ lb/in.}$$ **Ans.**

Ans:
$q_{\max} = 414$ lb/in.

7–58. The channel is subjected to a shear of $V = 75$ kN. Determine the shear flow developed at point A.

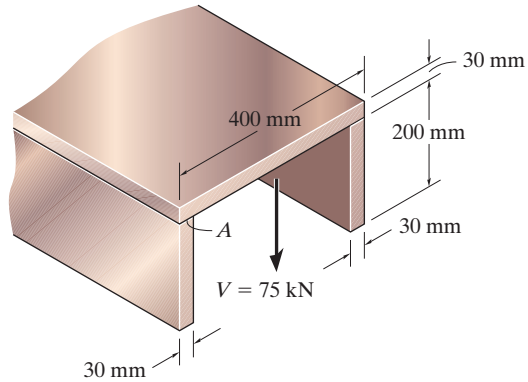

$$\bar{y} = \frac{\Sigma \bar{y} A}{\Sigma A} = \frac{0.015(0.4)(0.03) + 2[0.13(0.2)(0.03)]}{0.4(0.03) + 2(0.2)(0.03)} = 0.0725 \text{ m}$$

$$I = \frac{1}{12}(0.4)(0.03^3) + 0.4(0.03)(0.0725 - 0.015)^2$$

$$+ 2\left[\frac{1}{12}(0.03)(0.2^3) + 0.03(0.2)(0.13 - 0.0725)^2\right] = 0.12025(10^{-3}) \text{ m}^4$$

$$Q_A = \bar{y}'_A A' = 0.0575(0.2)(0.03) = 0.3450(10^{-3}) \text{ m}^3$$

$$q = \frac{VQ}{I}$$

$$q_A = \frac{75(10^3)(0.3450)(10^{-3})}{0.12025(10^{-3})} = 215 \text{ kN/m}$$ **Ans.**

Ans:
$q_A = 215$ kN/m

7–59. The channel is subjected to a shear of $V = 75$ kN. Determine the maximum shear flow in the channel.

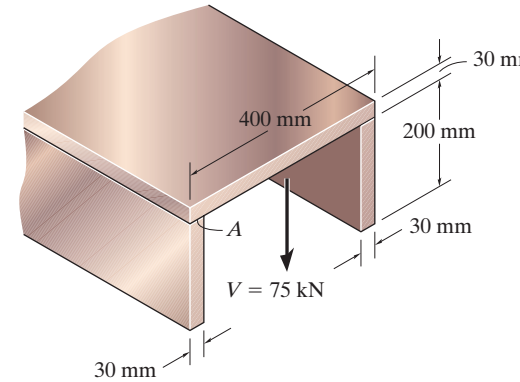

$$\bar{y} = \frac{\Sigma \bar{y} A}{\Sigma A} = \frac{0.015(0.4)(0.03) + 2[0.13(0.2)(0.03)]}{0.4(0.03) + 2(0.2)(0.03)}$$

$$= 0.0725 \text{ m}$$

$$I = \frac{1}{12}(0.4)(0.03^3) + 0.4(0.03)(0.0725 - 0.015)^2$$

$$+ 2\left[\frac{1}{12}(0.03)(0.2^3) + 0.03(0.2)(0.13 - 0.0725)^2\right]$$

$$= 0.12025(10^{-3}) \text{ m}^4$$

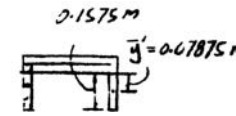

$$Q_{max} = \bar{y}' A' = 0.07875(0.1575)(0.03) = 0.37209(10^{-3}) \text{ m}^3$$

$$q_{max} = \frac{75(10^3)(0.37209)(10^{-3})}{0.12025(10^{-3})} = 232 \text{ kN/m}$$ **Ans.**

Ans:
$q_{max} = 232$ kN/m

***7–60.** The built-up beam is formed by welding together the thin plates of thickness 5 mm. Determine the location of the shear center O.

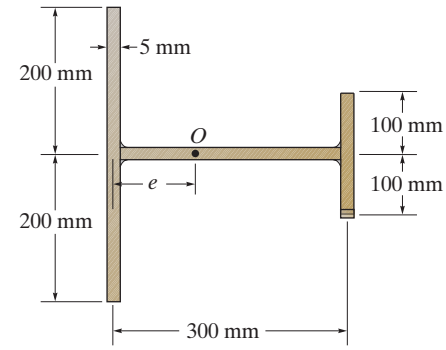

Shear Center. Referring to Fig. a and summing moments about point A, we have

$$\circlearrowleft + \Sigma(M_R)_A = \Sigma M_A; \quad -Pe = -(F_w)_1(0.3)$$

$$e = \frac{0.3(F_w)_1}{P} \tag{1}$$

Section Properties: The moment of inertia of the cross section about the axis of symmetry is

$$I = \frac{1}{12}(0.005)(0.4^3) + \frac{1}{12}(0.005)(0.2^3) = 30(10^{-6})\ \text{m}^4$$

Referring to Fig. b, $\bar{y}' = (0.1 - s) + \frac{s}{2} = (0.1 - 0.5s)$ m. Thus, Q as a function of s is

$$Q = \bar{y}'A' = (0.1 - 0.5s)(0.005s) = [0.5(10^{-3})s - 2.5(10^{-3})s^2]\ \text{m}^3$$

Shear Flow:

$$q = \frac{VQ}{I} = \frac{P[0.5(10^{-3})s - 2.5(10^{-3})s^2]}{30(10^{-6})} = P(16.6667s - 83.3333s^2)$$

Resultant Shear Force: The shear force resisted by the shorter web is

$$(F_w)_1 = 2\int_0^{0.1\text{ m}} q\,ds = 2\int_0^{0.1\text{ m}} P(16.6667s - 83.3333s^2)ds = 0.1111P$$

Substituting this result into Eq. (1),

$$e = 0.03333\text{ m} = 33.3\text{ m} \qquad \textbf{Ans.}$$

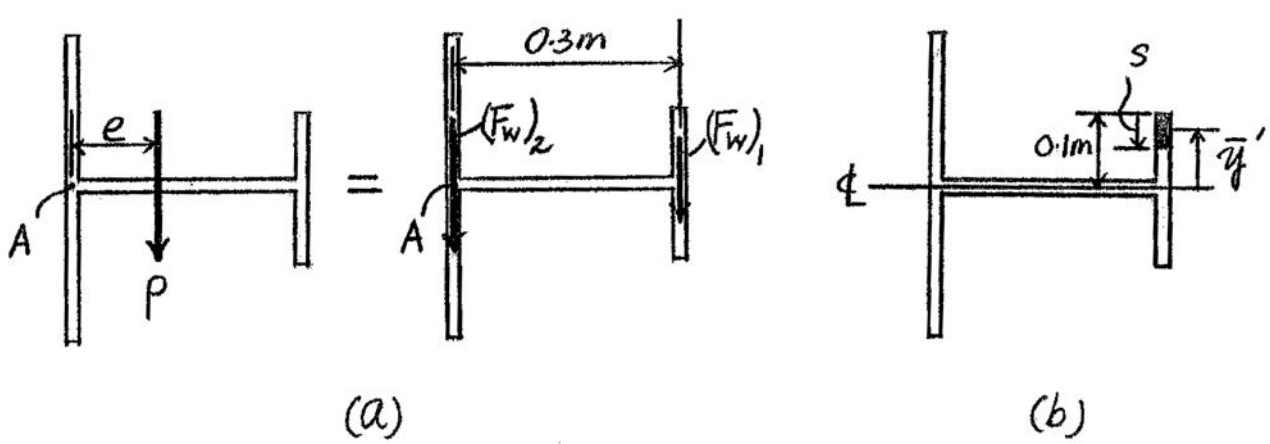

7–61. The assembly is subjected to a vertical shear of $V = 7$ kip. Determine the shear flow at points A and B and the maximum shear flow in the cross section.

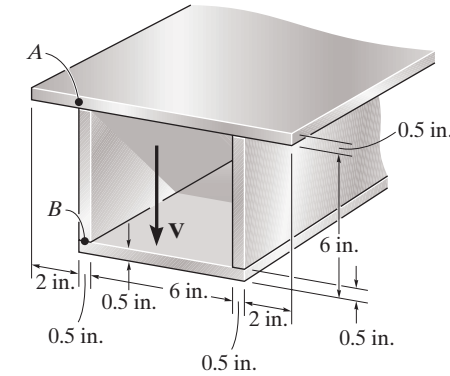

$$\bar{y} = \frac{\Sigma \bar{y} A}{\Sigma A} = \frac{(0.25)(11)(0.5) + 2(3.25)(5.5)(0.5) + 6.25(7)(0.5)}{0.5(11) + 2(0.5)(5.5) + 7(0.5)} = 2.8362 \text{ in.}$$

$$I = \frac{1}{12}(11)(0.5^3) + 11(0.5)(2.8362 - 0.25)^2 + 2\left(\frac{1}{12}\right)(0.5)(5.5^3) + 2(0.5)(5.5)(3.25 - 2.8362)^2$$

$$+ \frac{1}{12}(7)(0.5^3) + (0.5)(7)(6.25 - 2.8362)^2 = 92.569 \text{ in}^4$$

$$Q_A = \bar{y}_1' A_1' = (2.5862)(2)(0.5) = 2.5862 \text{ in}^3$$

$$Q_B = \bar{y}_2' A_2' = (3.4138)(7)(0.5) = 11.9483 \text{ in}^3$$

$$Q_{\max} = \Sigma \bar{y}' A' = (3.4138)(7)(0.5) + 2(1.5819)(3.1638)(0.5) = 16.9531 \text{ in}^3$$

$$q = \frac{VQ}{I}$$

$$q_A = \frac{7(10^3)(2.5862)}{92.569} = 196 \text{ lb/in.} \qquad \textbf{Ans.}$$

$$q_B = \frac{1}{2}\left(\frac{7(10^3)(11.9483)}{92.569}\right) = 452 \text{ lb/in.} \qquad \textbf{Ans.}$$

$$q_{\max} = \frac{1}{2}\left(\frac{7(10^3)(16.9531)}{92.569}\right) = 641 \text{ lb/in.} \qquad \textbf{Ans.}$$

Ans:
$q_A = 196$ lb/in., $q_B = 452$ lb/in.,
$q_{\max} = 641$ lb/in.

7–62. Determine the shear-stress variation over the cross section of the thin-walled tube as a function of elevation y and show that $\tau_{max} = 2V/A$, where $A = 2\pi rt$. *Hint:* Choose a differential area element $dA = Rt\,d\theta$. Using $dQ = y\,dA$, formulate Q for a circular section from θ to $(\pi - \theta)$ and show that $Q = 2R^2t\cos\theta$, where $\cos\theta = \sqrt{R^2 - y^2}/R$.

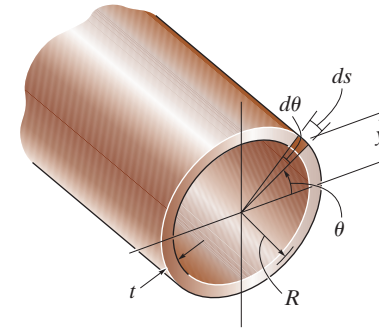

$$dA = R\,t\,d\theta$$

$$dQ = y\,dA = yR\,t\,d\theta$$

Here $y = R\sin\theta$

Therefore $dQ = R^2\,t\sin\theta\,d\theta$

$$Q = \int_{\theta}^{\pi-\theta} R^2\,t\sin\theta\,d\theta = R^2\,t(-\cos\theta)\Big|_{\theta}^{\pi-\theta}$$

$$= R^2t\,[-\cos(\pi - \theta) - (-\cos\theta)] = 2R^2t\cos\theta$$

$$dI = y^2\,dA = y^2\,R\,t\,d\theta = R^3\,t\sin^2\theta\,d\theta$$

$$I = \int_0^{2\pi} R^3\,t\sin^2\theta\,d\theta = R^3\,t\int_0^{2\pi}\frac{(1 - \cos 2\theta)}{2}\,d\theta$$

$$= \frac{R^3\,t}{2}\left[\theta - \frac{\sin 2\theta}{2}\right]\Big|_0^{2\pi} = \frac{R^3\,t}{2}[2\pi - 0] = \pi R^3\,t$$

$$\tau = \frac{VQ}{I\,t} = \frac{V(2R^2t\cos\theta)}{\pi R^3\,t(2t)} = \frac{V\cos\theta}{\pi R\,t}$$

Here $\cos\theta = \dfrac{\sqrt{R^2 - y^2}}{R}$

$$\tau = \frac{V}{\pi R^2t}\sqrt{R^2 - y^2}$$ **Ans.**

τ_{max} occurs at $y = 0$; therefore

$$\tau_{max} = \frac{V}{\pi R\,t}$$

$A = 2\pi Rt$; therefore

$$\tau_{max} = \frac{2V}{A}$$ **QED**

Ans:

$$\tau = \frac{V}{\pi R^2t}\sqrt{R^2 - y^2}$$

7–63. Determine the location e of the shear center, point O, for the thin-walled member having the cross section shown. The member segments have the same thickness t.

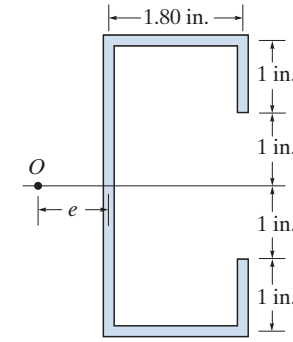

Summing moments about A,

$$Pe = F(4) + 2V_1(1.8) \qquad (1)$$

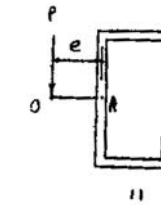

$$I = 2\left[\frac{1}{12}t\,(4^3)\right] - \frac{1}{12}t(2^3) + 2\left[(1.80)(t)(2^2)\right] = 24.4\,t\ \text{in}^4$$

$$Q_1 = \bar{y}_1{}'A' = \left(1 + \frac{y}{2}\right)(y\,t) = t\left(y + \frac{y^2}{2}\right)$$

$$Q_2 = \Sigma\bar{y}'A' = 1.5(1)(t) + 2(x)(t) = t(1.5 + 2x)$$

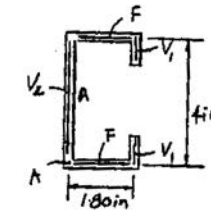

$$q_1 = \frac{VQ_1}{I} = \frac{Pt\left(y + \frac{y^2}{2}\right)}{24.4\,t} = \frac{P\left(y + \frac{y^2}{2}\right)}{24.4}$$

$$q_2 = \frac{VQ_2}{I} = \frac{Pt\,(1.5 + 2x)}{24.4\,t} = \frac{P(1.5 + 2x)}{24.4}$$

$$V_1 = \int q_1\,dy = \frac{P}{24.4}\int_0^1\left(y + \frac{y^2}{2}\right)dy = 0.0273\,P$$

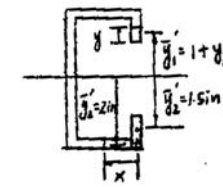

$$F = \int q_2\,dy = \frac{P}{24.4}\int_0^{1.80}(1.5 + 2x)\,dx = 0.2434\,P$$

From Eq. (1),

$$Pe = 0.2434\,P(4) + 2(0.0273)P(1.8)$$

$$e = 1.07\ \text{in.} \qquad \textbf{Ans.}$$

Ans:
$e = 1.07$ in.

***7–64.** Determine the location e of the shear center, point O, for the thin-walled member having the cross section shown. The member segments have the same thickness t.

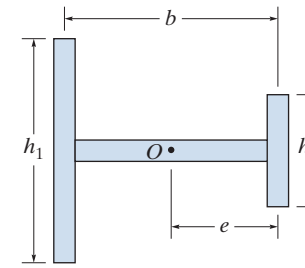

Summing moments about A,

$$eP = bF_1 \qquad (1)$$

$$I = \frac{1}{12}(t)(h_1)^3 + \frac{1}{12}(t)(h_2)^3 = \frac{1}{12}t\,(h_1^3 + h_2^3)$$

$$q_1 = \frac{P(h_1/2)(t)(h_1/4)}{I} = \frac{Ph_1^2 t}{8I}$$

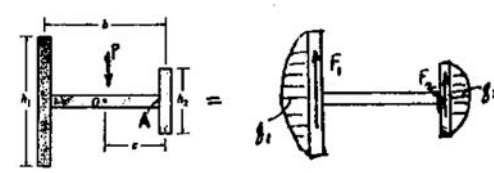

$$F_1 = \frac{2}{3}q_1(h_1) = \frac{Ph_1^3 t}{12I}$$

From Eq. (1),

$$e = \frac{b}{P}\left(\frac{Ph_1^3 t}{12I}\right)$$

$$= \frac{h_1^3 b}{(h_1^3 + h_2^3)}$$

$$= \frac{b}{1 + (h_2/h_1)^3} \qquad \textbf{Ans.}$$

7–65. The beam supports a vertical shear of $V = 7$ kip. Determine the resultant force developed in segment AB of the beam.

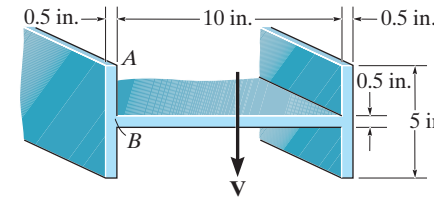

Section Properties:

$$I_{NA} = \frac{1}{12}(1)(5^3) + \frac{1}{12}(10)(0.5^3) = 10.52083 \text{ in}^4$$

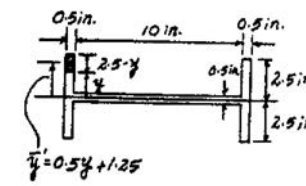

$$Q = \bar{y}'A' = (0.5y + 1.25)(2.5 - y)(0.5)$$
$$= 1.5625 - 0.25y^2$$

Shear Flow:

$$q = \frac{VQ}{I} = \frac{7(10^3)(1.5625 - 0.25y^2)}{10.52083}$$

$$= \{1039.60 - 166.34y^2\} \text{ lb/in.}$$

Resultant Shear Force: For web AB

$$V_{AB} = \int_{0.25\text{ in.}}^{2.5\text{ in.}} q\,dy$$

$$= \int_{0.25\text{ in.}}^{2.5\text{ in.}} (1039.60 - 166.34y^2)\,dy$$

$$= 1474 \text{ lb} = 1.47 \text{ kip}$$ **Ans.**

Ans:
$V_{AB} = 1.47$ kip

7–66. The built-up beam is fabricated from the three thin plates having a thickness t. Determine the location of the shear center O.

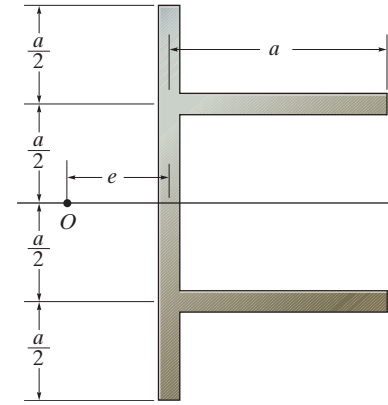

Shear Center. Referring to Fig. a and summing moments about point A, we have

$$\circlearrowleft + \Sigma(M_R)_A = \Sigma M_A; \quad Pe = F_f(a) \tag{1}$$

Section Properties: The moment of inertia of the cross section about the axis of symmetry is

$$I = \frac{1}{12}(t)(2a)^3 + 2\left[at\left(\frac{a}{2}\right)^2\right] = \frac{7}{6}a^3t$$

Referring to Fig. c, $\bar{y}' = \frac{a}{2}$. Thus, Q as a function of s is

$$Q = \bar{y}'A' = \frac{a}{2}(st) = \frac{at}{2}s$$

Shear Flow:

$$q = \frac{VQ}{I} = \frac{P\left(\frac{at}{2}s\right)}{\frac{7}{6}a^3t} = \frac{3P}{7a^2}s$$

Resultant Shear Force: The shear force resisted by the flange is

$$F_f = \int_0^a q\,ds = \int_0^a \frac{3P}{7a^2}s\,ds = \frac{3P}{7a^2}\left(\frac{s^2}{2}\right)\Bigg|_0^a = \frac{3}{14}P$$

Substituting this result into Eq. (1),

$$e = \frac{3}{14}a \qquad \textbf{Ans.}$$

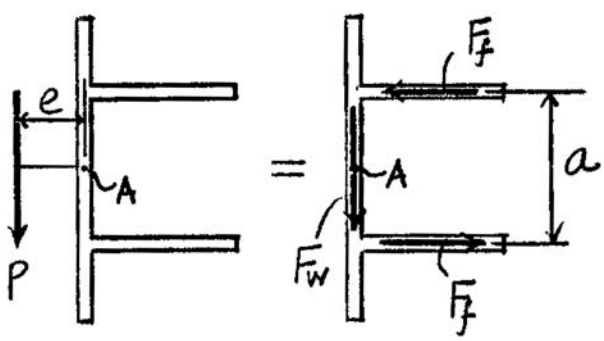

(a)

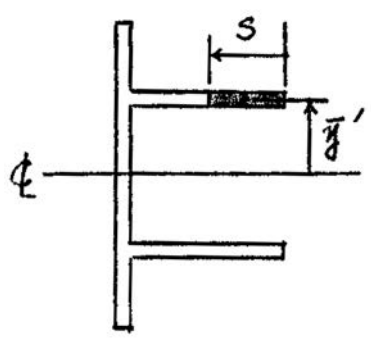

(b)

Ans:

$$e = \frac{3}{14}a$$

7–67. Determine the location e of the shear center, point O, for the thin-walled member having the cross section shown. The member segments have the same thickness t.

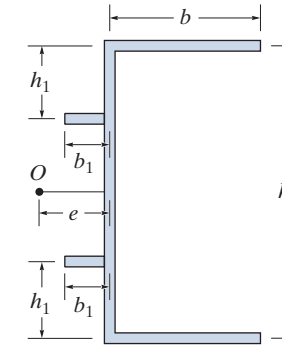

Summing moments about A,

$$Pe = F_2(h) - F_1(h - 2h_1) \qquad (1)$$

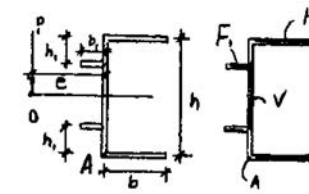

$$I = \frac{1}{12}(t)h^3 + 2(b)(t)\left(\frac{h}{2}\right)^2 + 2(b_1)(t)\left(\frac{h - 2h_1}{2}\right)^2$$

$$= \frac{1}{12}th^3 + \frac{bth^2}{2} + \frac{b_1t(h - 2h_1)^2}{2}$$

$$Q_1 = \bar{y}_1{}'A_1{}' = \frac{h - 2h_1}{2}(x_1)t$$

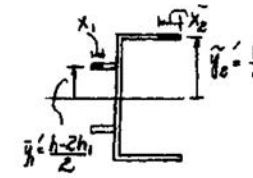

$$q_1 = \frac{VQ_1}{I} = \frac{Pt\left(\frac{h - 2h_1}{2}\right)x_1}{I} = \frac{Pt(h - 2h_1)}{2I}x_1$$

$$F_1 = \int_0^{b_1} q_1 dx_1 = \frac{Pt(h - 2h_1)}{2I}\int_0^{b_1} x_1 dx = \frac{Ptb_1^2(h - 2h_1)}{4I}$$

$$Q_2 = \bar{y}_2{}'A_2{}' = \frac{h}{2}(x_2)t$$

$$q_2 = \frac{VQ_2}{I} = \frac{P(\frac{h}{2})(x_2)t}{I}$$

$$F_2 = \int q_2 dx_2 = \frac{Pht}{2I}\int_0^b x_2 dx_2 = \frac{Phb^2t}{4I}$$

From Eq. (1),

$$Pe = \frac{Ph^2b^2t}{4I} - \frac{Ptb_1^2(h - 2h_1)^2}{4I}$$

$$e = \frac{h^2b^2t - tb_1^2(h - 2h_1)^2}{4\left[\frac{1}{12}th^3 + \frac{bth^2}{2} + \frac{b_1t(h - 2h_1)^2}{2}\right]} = \frac{3[h^2b^2 - (h - 2h_1)^2b_1^2]}{h^3 + 6bh^2 + 6b_1(h - 2h_1)^2} \qquad \textbf{Ans.}$$

Ans:
$$e = \frac{3[h^2b^2 - (h - 2h_1)^2b_1^2]}{h^3 + 6bh^2 + 6b_1(h - 2h_1)^2}$$

***7–68.** A thin plate of thickness t is bent to form the beam having the cross section shown. Determine the location of the shear center O.

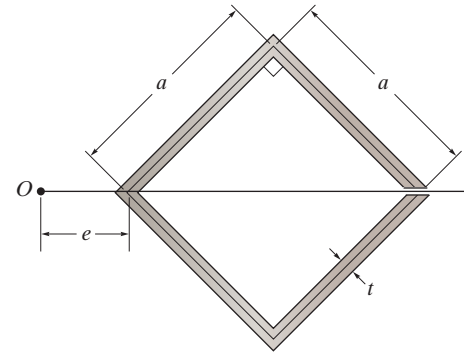

Shear Center: Referring to Fig. a and summing moments about point A,

$$\circlearrowleft + \Sigma(M_R)_A = \Sigma M_A; \quad Pe = 2F_1 a \qquad (1)$$

Section Properties: The moment of inertia of the inclined segment shown in Fig. b about the neutral axis is $I = \frac{1}{12}bh^3$. In this case, $b = \frac{t}{\sin 45°} = \frac{2}{\sqrt{2}}t$ and $h = 2a \sin 45° = \sqrt{2}a$. Thus, the moment of inertia of the cross section about the axis of symmetry is

$$I = 2\left[\frac{1}{12}\left(\frac{2}{\sqrt{2}}t\right)\left(\sqrt{2}a\right)^3\right] = \frac{2}{3}a^3 t$$

Referring to Fig. c, $\bar{y}' = \frac{s}{2}\sin 45° = \frac{\sqrt{2}}{4}s$. Thus, Q as a function of s is

$$Q = \bar{y}'A' = \frac{\sqrt{2}}{4}s(st) = \frac{\sqrt{2}}{4}ts^2$$

Shear Flow:

$$q = \frac{VQ}{I} = \frac{P\left(\frac{\sqrt{2}}{4}ts^2\right)}{\frac{2}{3}a^3 t} = \frac{3\sqrt{2}P}{8a^3}s^2$$

Resultant Shear Force: The shear force resisted by the open-ended segment is

$$F_1 = \int_0^a q\,ds = \int_0^a \frac{3\sqrt{2}P}{8a^3}s^2\,ds = \frac{3\sqrt{2}P}{8a^3}\left(\frac{s^3}{3}\right)\Big|_0^a = \frac{\sqrt{2}}{8}P$$

Substituting this result into Eq. (1),

$$e = \frac{\sqrt{2}}{4}a \qquad \textbf{Ans.}$$

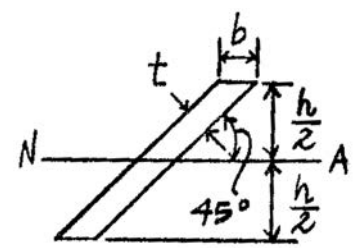

(b)

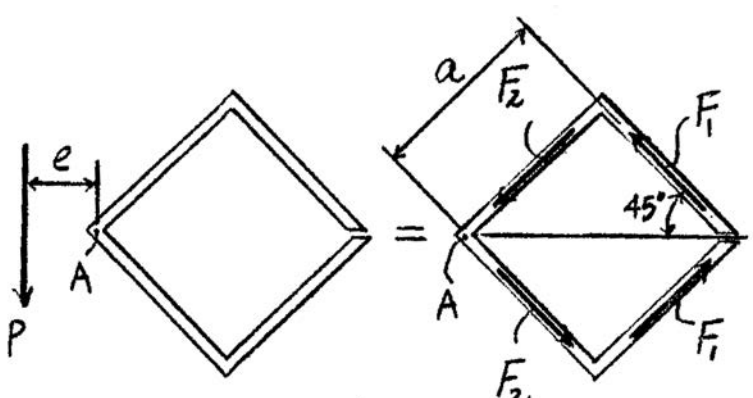

(a)

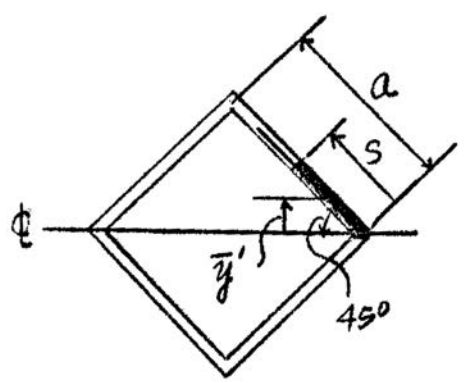

(c)

7–69. A thin plate of thickness t is bent to form the beam having the cross section shown. Determine the location of the shear center O.

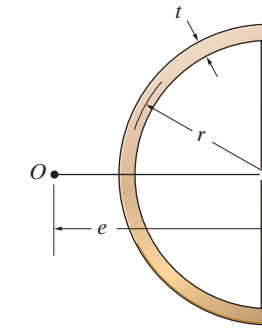

Section Properties: For the arc segment, Fig. a, $y = r\cos\theta$ and the area of the differential element shown shaded is $dA = t\,ds = tr\,d\theta$. Then, the moment of inertia of the entire cross section about the axis of symmetry is

$$I = \frac{1}{12}(t)(2r)^3 + \int y^2\,dA$$

$$= \frac{2}{3}r^3t + \int_0^{\pi}(r\cos\theta)^2\,trd\theta$$

$$= \frac{2}{3}r^3t + \frac{r^3t}{2}\int_0^{\pi}(\cos 2\theta + 1)\,d\theta$$

$$= \frac{2}{3}r^3t + \frac{r^3t}{2}\left(\frac{1}{2}\sin 2\theta + \theta\right)\Big|_0^{\pi}$$

$$= \frac{r^3t}{6}(4 + 3\pi)$$

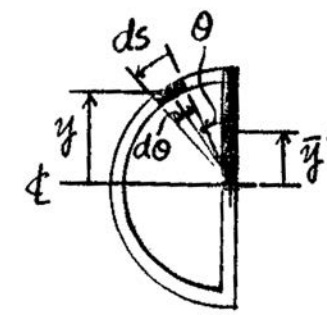

(a)

Referring to Fig. a, $\bar{y}' = \frac{r}{2}$. Thus, Q as a function of s is

$$Q = \bar{y}'A' + \int y\,dA = \frac{r}{2}(rt) + \int_0^{\theta} r\cos\theta(trd\theta)$$

$$= \frac{1}{2}r^2t + r^2t\int_0^{\theta}\cos\theta\,d\theta$$

$$= \frac{r^2t}{2}(1 + 2\sin\theta)$$

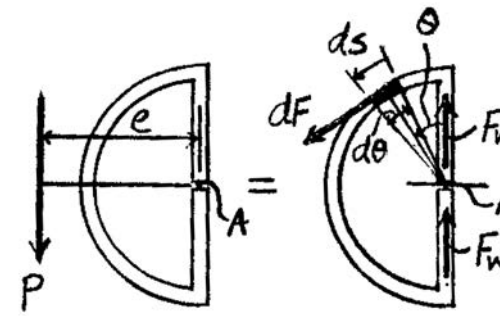

(b)

Shear Flow:

$$q = \frac{VQ}{I} = \frac{P\left[\frac{r^2t}{2}(1 + 2\sin\theta)\right]}{\frac{r^3t}{6}(4 + 3\pi)} = \frac{3P}{(4 + 3\pi)r}(1 + 2\sin\theta)$$

Resultant Shear Force: The shear force resisted by the arc segment is

$$F = \int q\,ds = \int_0^{\pi} qrd\theta = \int_0^{\pi}\frac{3P}{(4 + 3\pi)r}(1 + 2\sin\theta)rd\theta$$

$$= \frac{3P}{4 + 3\pi}(\theta - 2\cos\theta)\Big|_0^{\pi}$$

$$= \frac{3P(\pi + 4)}{4 + 3\pi}$$

Shear Center: Referring to Fig. b and summing the moments about point A,

$$\circlearrowleft + \Sigma(M_R)_A = \Sigma M_A; \qquad Pe = r\int dF$$

$$Pe = r\left[\frac{3P(\pi + 4)}{4 + 3\pi}\right]$$

$$e = \left[\frac{3(\pi + 4)}{4 + 3\pi}\right]r \qquad \textbf{Ans.}$$

Ans: $e = \left[\frac{3(\pi + 4)}{4 + 3\pi}\right]r$

7–70. Determine the location e of the shear center, point O, for the thin-walled member having the cross section shown.

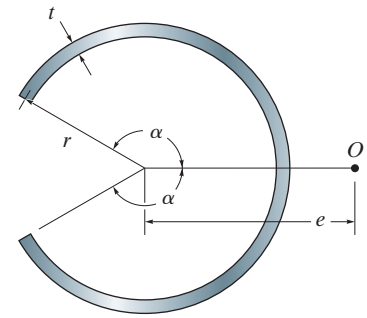

Summing moments about A.

$$P\,e = r\int dF \qquad (1)$$

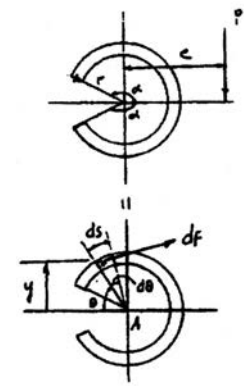

$$dA = t\,ds = t\,r\,d\theta$$

$$y = r\sin\theta$$

$$dI = y^2\,dA = r^2\sin^2\theta(t\,r\,d\theta) = r^3\,t\sin^2\theta d\theta$$

$$I = r^3\,t\int \sin^2\theta\,d\theta = r^3\,t\int_{\pi-\alpha}^{\pi+\alpha}\frac{1-\cos 2\theta}{2}\,d\theta$$

$$= \frac{r^3\,t}{2}\left(\theta - \frac{\sin 2\theta}{2}\right)\Bigg|_{\pi-\alpha}^{\pi+\alpha}$$

$$= \frac{r^3\,t}{2}\left[\left(\pi+\alpha-\frac{\sin 2(\pi+\alpha)}{2}\right)-\left(\pi-\alpha-\frac{\sin 2(\pi-\alpha)}{2}\right)\right]$$

$$= \frac{r^3\,t}{2}(2\alpha - 2\sin\alpha\cos\alpha) = \frac{r^3\,t}{2}(2\alpha - \sin 2\alpha)$$

$$dQ = y\,dA = r\sin\theta(t\,r\,d\theta) = r^2\,t\sin\theta\,d\theta$$

$$Q = r^2\,t\int_{\pi-\alpha}^{\theta}\sin\theta\,d\theta = r^2\,t\,(-\cos\theta)\Big|_{\pi-\alpha}^{\theta} = r^2\,t(-\cos\theta - \cos\alpha) = -r^2\,t(\cos\theta + \cos\alpha)$$

$$q = \frac{VQ}{I} = \frac{P(-r^2t)(\cos\theta+\cos\alpha)}{\frac{r^3t}{2}(2\alpha - \sin 2\alpha)} = \frac{-2P(\cos\theta+\cos\alpha)}{r(2\alpha-\sin 2\alpha)}$$

$$\int dF = \int q\,ds = \int q\,r\,d\theta$$

$$\int dF = \frac{-2P\,r}{r(2\alpha-\sin 2\alpha)}\int_{\pi-\alpha}^{\pi+\alpha}(\cos\theta+\cos\alpha)\,d\theta = \frac{-2P}{2\alpha-\sin 2\alpha}(2\alpha\cos\alpha - 2\sin\alpha)$$

$$= \frac{4P}{2\alpha-\sin 2\alpha}(\sin\alpha - \alpha\cos\alpha)$$

From Eq. (1); $P\,e = r\left[\dfrac{4P}{2\alpha-\sin 2\alpha}(\sin\alpha-\alpha\cos\alpha)\right]$

$$e = \frac{4r\,(\sin\alpha - \alpha\cos\alpha)}{2\alpha - \sin 2\alpha} \qquad \textbf{Ans.}$$

Ans:

$$e = \frac{4r\,(\sin\alpha - \alpha\cos\alpha)}{2\alpha - \sin 2\alpha}$$

7–71. The beam is fabricated from four boards nailed together as shown. Determine the shear force each nail along the sides C and the top D must resist if the nails are uniformly spaced at $s = 3$ in. The beam is subjected to a shear of $V = 4.5$ kip.

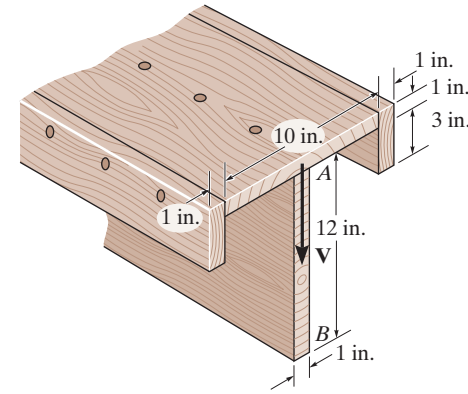

Section Properties:

$$\bar{y} = \frac{\Sigma \bar{y} A}{\Sigma A} = \frac{0.5(10)(1) + 2(4)(2) + 7(12)(1)}{10(1) + 4(2) + 12(1)} = 3.50 \text{ in.}$$

$$I_{NA} = \frac{1}{12}(10)(1^3) + (10)(1)(3.50 - 0.5)^2 + \frac{1}{12}(2)(4^3) + 2(4)(3.50 - 2)^2 + \frac{1}{12}(1)(12^3) + 1(12)(7-3.50)^2$$

$$= 410.5 \text{ in}^4$$

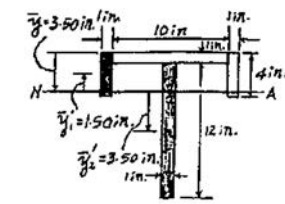

$$Q_C = \bar{y}_1' A' = 1.5(4)(1) = 6.00 \text{ in}^3$$

$$Q_D = \bar{y}_2' A' = 3.50(12)(1) = 42.0 \text{ in}^3$$

Shear Flow:

$$q_C = \frac{VQ_C}{I} = \frac{4.5(10^3)(6.00)}{410.5} = 65.773 \text{ lb/in.}$$

$$q_D = \frac{VQ_D}{I} = \frac{4.5(10^3)(42.0)}{410.5} = 460.41 \text{ lb/in.}$$

Hence, the shear force resisted by each nail is

$F_C = q_C s = (65.773 \text{ lb/in.})(3 \text{ in.}) = 197$ lb **Ans.**

$F_D = q_D s = (460.41 \text{ lb/in.})(3 \text{ in.}) = 1.38$ kip **Ans.**

Ans:
$F_C = 197$ lb, $F_D = 1.38$ kip

***7–72.** The T-beam is subjected to a shear of $V = 150$ kN. Determine the amount of this force that is supported by the web B.

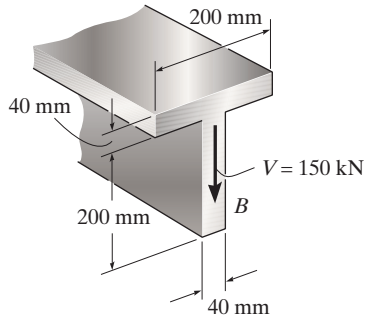

$$\bar{y} = \frac{(0.02)(0.2)(0.04) + (0.14)(0.2)(0.04)}{0.2(0.04) + 0.2(0.04)} = 0.08 \text{ m}$$

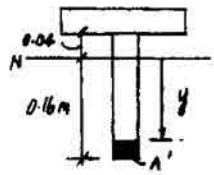

$$I = \frac{1}{12}(0.2)(0.04^3) + 0.2(0.04)(0.08 - 0.02)^2$$

$$+ \frac{1}{12}(0.04)(0.2^3) + 0.2(0.04)(0.14 - 0.08)^2 = 85.3333(10^{-6}) \text{ m}^4$$

$$A' = 0.04(0.16 - y)$$

$$\bar{y}' = y + \frac{(0.16 - y)}{2} = \frac{(0.16 + y)}{2}$$

$$Q = \bar{y}'A' = 0.02(0.0256 - y^2)$$

$$\tau = \frac{VQ}{It} = \frac{150(10^3)(0.02)(0.0256 - y^2)}{85.3333(10^{-6})(0.04)} = 22.5(10^6) - 878.9(10^6)y^2$$

$$V = \int \tau \, dA, \qquad dA = 0.04 \, dy$$

$$V = \int_{-0.04}^{0.16} (22.5(10^6) - 878.9(10^6)y^2) \, 0.04 \, dy$$

$$= \int_{-0.04}^{0.16} (900(10^3) - 35.156(10^6)y^2) dy$$

$$= 131\,250 \text{ N} = 131 \text{ kN}$$ **Ans.**

7–73. The member is subject to a shear force of $V = 2$ kN. Determine the shear flow at points A, B, and C. The thickness of each thin-walled segment in 15 mm.

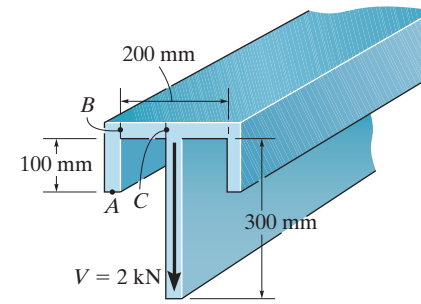

Section Properties:

$$\bar{y} = \frac{\Sigma \bar{y} A}{\Sigma A}$$

$$= \frac{0.0075(0.2)(0.015) + 0.0575(0.115)(0.03) + 0.165(0.3)(0.015)}{0.2(0.015) + 0.115(0.03) + 0.3(0.015)}$$

$$= 0.08798 \text{ m}$$

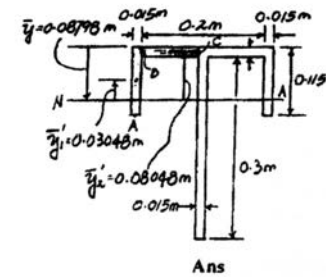

$$I_{NA} = \frac{1}{12}(0.2)(0.015^3) + 0.2(0.015)(0.08798 - 0.0075)^2$$

$$+ \frac{1}{12}(0.03)(0.115^3) + 0.03(0.115)(0.08798 - 0.0575)^2$$

$$+ \frac{1}{12}(0.015)(0.3^3) + 0.015(0.3)(0.165 - 0.08798)^2$$

$$= 86.93913(10^{-6}) \text{ m}^4$$

$$Q_A = 0 \qquad \textbf{Ans.}$$

$$Q_B = \bar{y}_1' A' = 0.03048(0.115)(0.015) = 52.57705(10^{-6}) \text{ m}^{-3}$$

$$Q_C = \Sigma \bar{y}_1' A'$$

$$= 0.03048(0.115)(0.015) + 0.08048(0.0925)(0.015)$$

$$= 0.16424(10^{-3}) \text{ m}^3$$

Shear Flow:

$$q_A = \frac{VQ_A}{I} = 0$$

$$q_B = \frac{VQ_B}{I} = \frac{2(10^3)(52.57705)(10^{-6})}{86.93913(10^{-6})} = 1.21 \text{ kN/m} \qquad \textbf{Ans.}$$

$$q_C = \frac{VQ_C}{I} = \frac{2(10^3)(0.16424)(10^{-3})}{86.93913(10^{-6})} = 3.78 \text{ kN/m} \qquad \textbf{Ans.}$$

Ans:
$q_A = 0$, $q_B = 1.21$ kN/m, $q_C = 3.78$ kN/m

7–74. Determine the shear stress at points B and C on the web of the beam located at section $a-a$.

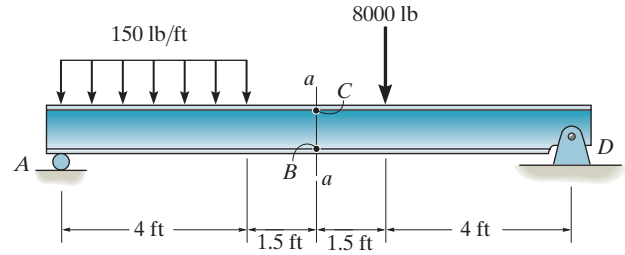

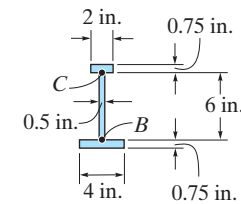

$$\bar{y} = \frac{(0.375)(4)(0.75) + (3.75)(6)(0.5) + (7.125)(2)(0.75)}{4(0.75) + 6(0.5) + 2(0.75)} = 3.075 \text{ in.}$$

$$I = \frac{1}{12}(4)(0.75^3) + 4(0.75)(3.075 - 0.375)^2$$

$$+ \frac{1}{12}(0.5)(6^3) + 0.5(6)(3.75 - 3.075)^2$$

$$+ \frac{1}{12}(2)(0.75^3) + 2(0.75)(7.125 - 3.075)^2$$

$$= 57.05 \text{ in}^4$$

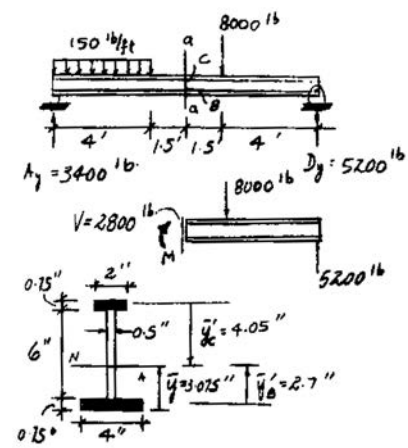

$$Q_B = \bar{y}'_B A' = 2.7(4)(0.75) = 8.1 \text{ in}^3$$

$$Q_C = \bar{y}'_C A' = 4.05(2)(0.75) = 6.075 \text{ in}^3$$

$$\tau = \frac{VQ}{It}$$

$$\tau_B = \frac{2800(8.1)}{57.05(0.5)} = 795 \text{ psi}$$ **Ans.**

$$\tau_C = \frac{2800(6.075)}{57.05(0.5)} = 596 \text{ psi}$$ **Ans.**

Ans:
$\tau_B = 795$ psi, $\tau_C = 596$ psi

7–75. Determine the maximum shear stress acting at section *a–a* in the beam.

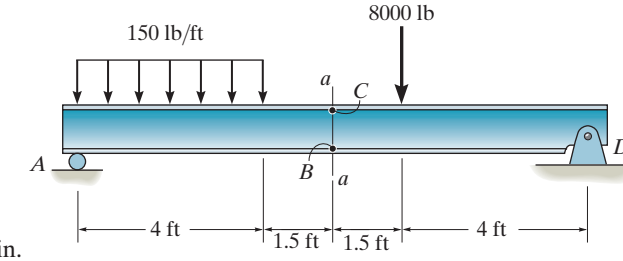

$$\bar{y} = \frac{(0.375)(4)(0.75) + (3.75)(6)(0.5) + (7.125)(2)(0.75)}{4(0.75) + 6(0.5) + 2(0.75)} = 3.075 \text{ in.}$$

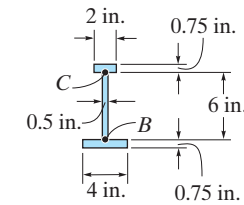

$$I = \frac{1}{12}(4)(0.75^3) + 4(0.75)(3.075 - 0.375)^2$$

$$+ \frac{1}{12}(0.5)(6^3) + 0.5(6)(3.75 - 3.075)^2$$

$$+ \frac{1}{12}(2)(0.75^3) + 2(0.75)(7.125 - 3.075)^2$$

$$= 57.05 \text{ in}^4$$

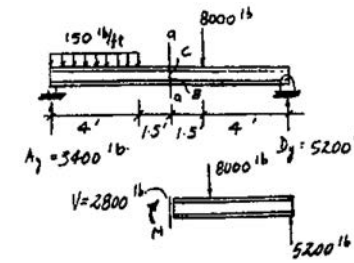

$$Q_{max} = \Sigma \bar{y}'A'$$

$$= 2.7(4)(0.75) + 2.325(0.5)(1.1625)$$

$$= 9.4514 \text{ in}^3$$

$$\tau_{max} = \frac{VQ_{max}}{It} = \frac{2800(9.4514)}{57.05(0.5)} = 928 \text{ psi}$$ **Ans.**

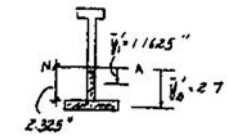

Ans:
$\tau_{max} = 928$ psi

8–1. A spherical gas tank has an inner radius of $r = 1.5$ m. If it is subjected to an internal pressure of $p = 300$ kPa, determine its required thickness if the maximum normal stress is not to exceed 12 MPa.

$$\sigma_{\text{allow}} = \frac{p\,r}{2\,t}; \qquad 12(10^6) = \frac{300(10^3)(1.5)}{2\,t}$$

$t = 0.0188 \text{ m} = 18.8 \text{ mm}$ **Ans.**

Ans:
$t = 18.8$ mm

8–2. A pressurized spherical tank is to be made of 0.5-in.-thick steel. If it is subjected to an internal pressure of $p = 200$ psi, determine its outer radius if the maximum normal stress is not to exceed 15 ksi.

$$\sigma_{\text{allow}} = \frac{p\,r}{2\,t}; \qquad 15(10^3) = \frac{200\,r_i}{2(0.5)}$$

$r_i = 75$ in.

$r_o = 75 \text{ in.} + 0.5 \text{ in.} = 75.5 \text{ in.}$ **Ans.**

Ans:
$r_o = 75.5$ in.

8–3. The thin-walled cylinder can be supported in one of two ways as shown. Determine the state of stress in the wall of the cylinder for both cases if the piston P causes the internal pressure to be 65 psi. The wall has a thickness of 0.25 in. and the inner diameter of the cylinder is 8 in.

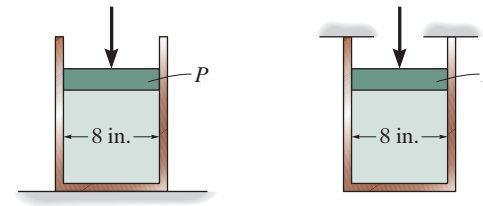

(a) (b)

Case (a):

$$\sigma_1 = \frac{pr}{t}; \qquad \sigma_1 = \frac{65(4)}{0.25} = 1.04 \text{ ksi} \qquad \textbf{Ans.}$$

$$\sigma_2 = 0 \qquad \textbf{Ans.}$$

Case (b):

$$\sigma_1 = \frac{pr}{t}; \qquad \sigma_1 = \frac{65(4)}{0.25} = 1.04 \text{ ksi} \qquad \textbf{Ans.}$$

$$\sigma_2 = \frac{pr}{2t}; \qquad \sigma_2 = \frac{65(4)}{2(0.25)} = 520 \text{ psi} \qquad \textbf{Ans.}$$

Ans:
(a) $\sigma_1 = 1.04$ ksi, $\sigma_2 = 0$,
(b) $\sigma_1 = 1.04$ ksi, $\sigma_2 = 520$ psi

***8–4.** The tank of the air compressor is subjected to an internal pressure of 90 psi. If the internal diameter of the tank is 22 in., and the wall thickness is 0.25 in., determine the stress components acting at point A. Draw a volume element of the material at this point, and show the results on the element.

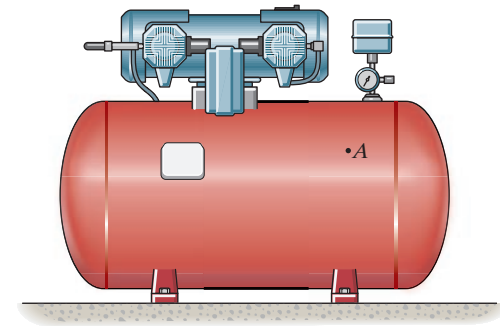

Hoop Stress for Cylindrical Vessels: Since $\frac{r}{t} = \frac{11}{0.25} = 44 > 10$, then *thin wall* analysis can be used. Applying Eq. 8–1

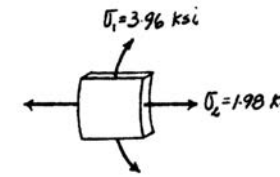

$$\sigma_1 = \frac{pr}{t} = \frac{90(11)}{0.25} = 3960 \text{ psi} = 3.96 \text{ ksi} \qquad \textbf{Ans.}$$

Longitudinal Stress for Cylindrical Vessels: Applying Eq. 8–2

$$\sigma_2 = \frac{pr}{2t} = \frac{90(11)}{2(0.25)} = 1980 \text{ psi} = 1.98 \text{ ksi} \qquad \textbf{Ans.}$$

8–5. The open-ended polyvinyl chloride pipe has an inner diameter of 4 in. and thickness of 0.2 in. If it carries flowing water at 60 psi pressure, determine the state of stress in the walls of the pipe.

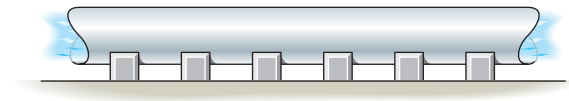

$$\sigma_1 = \frac{p\,r}{t} = \frac{60(2)}{0.2} = 600 \text{ psi}$$ **Ans.**

$$\sigma_2 = 0$$ **Ans.**

There is no stress component in the longitudinal direction since the pipe has open ends.

Ans:
$\sigma_1 = 600$ psi, $\sigma_2 = 0$

8–6. If the flow of water within the pipe in Prob. 8–5 is stopped due to the closing of a valve, determine the state of stress in the walls of the pipe. Neglect the weight of the water. Assume the supports only exert vertical forces on the pipe.

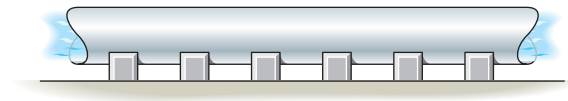

$$\sigma_1 = \frac{p\,r}{t} = \frac{60(2)}{0.2} = 600 \text{ psi}$$ **Ans.**

$$\sigma_2 = \frac{p\,r}{2\,t} = \frac{60(2)}{2(0.2)} = 300 \text{ psi}$$ **Ans.**

Ans:
$\sigma_1 = 600$ psi, $\sigma_2 = 300$ psi

8–7. A boiler is constructed of 8-mm thick steel plates that are fastened together at their ends using a butt joint consisting of two 8-mm cover plates and rivets having a diameter of 10 mm and spaced 50 mm apart as shown. If the steam pressure in the boiler is 1.35 MPa, determine (a) the circumferential stress in the boiler's plate apart from the seam, (b) the circumferential stress in the outer cover plate along the rivet line *a–a*, and (c) the shear stress in the rivets.

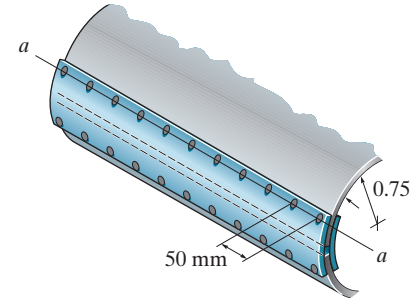

a) $$\sigma_1 = \frac{pr}{t} = \frac{1.35(10^6)(0.75)}{0.008} = 126.56(10^6) = 127 \text{ MPa}$$ **Ans.**

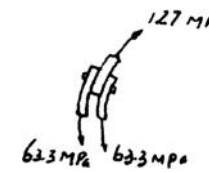

b) $$126.56\,(10^6)(0.05)(0.008) = \sigma_1'(2)(0.04)(0.008)$$

$$\sigma_1' = 79.1 \text{ MPa}$$ **Ans.**

c) From FBD(a)

$+\uparrow \Sigma F_y = 0;$ $$F_b - 79.1(10^6)[(0.008)(0.04)] = 0$$

$$F_b = 25.3 \text{ kN}$$

$$(\tau_{avg})_b = \frac{F_b}{A} = \frac{25312.5}{\frac{\pi}{4}(0.01)^2} = 322 \text{ MPa}$$ **Ans.**

Ans:
(a) $\sigma_1 = 127$ MPa,
(b) $\sigma_1' = 79.1$ MPa, $(\tau_{avg})_b = 322$ MPa

***8–8.** The steel water pipe has an inner diameter of 12 in. and wall thickness 0.25 in. If the valve A is opened and the flowing water is under a gauge pressure of 250 psi, determine the longitudinal and hoop stress developed in the wall of the pipe.

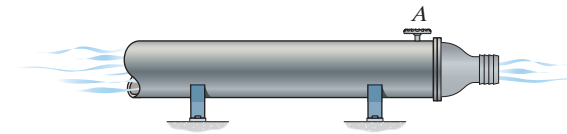

Normal Stress: Since the pipe has two open ends,

$$\sigma_{\text{long}} = \sigma_2 = 0 \qquad \textbf{Ans.}$$

Since $\dfrac{r}{t} = \dfrac{6}{0.25} = 24 > 10$, thin-wall analysis can be used.

$$\sigma_h = \sigma_1 = \frac{pr}{t} = \frac{250(6)}{0.25} = 6000 \text{ psi} = 6 \text{ ksi} \qquad \textbf{Ans.}$$

8–9. The steel water pipe has an inner diameter of 12 in. and wall thickness 0.25 in. If the valve A is closed and the water pressure is 300 psi, determine the longitudinal and hoop stress developed in the wall of the pipe. Draw the state of stress on a volume element located on the wall.

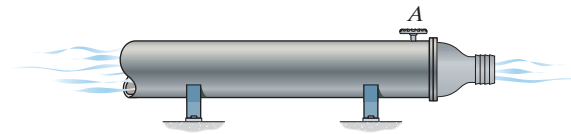

Normal Stress: Since $\frac{r}{t} = \frac{6}{0.25} = 24 > 10$, thin-wall analysis can be used.

$$\sigma_{\text{hoop}} = \sigma_1 = \frac{pr}{t} = \frac{300(6)}{0.25} = 7200 \text{ psi} = 7.20 \text{ ksi} \qquad \textbf{Ans.}$$

$$\sigma_{\text{loop}} = \sigma_2 = \frac{pr}{2t} = \frac{300(6)}{2(0.25)} = 3600 \text{ psi} = 3.60 \text{ ksi} \qquad \textbf{Ans.}$$

The state of stress on an element in the pipe wall is shown in Fig. *a*.

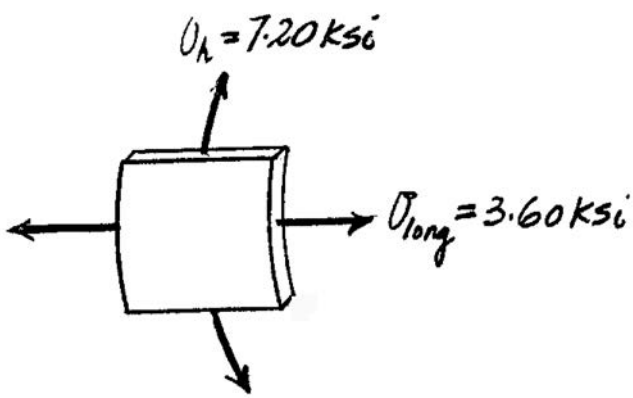

(a)

Ans:
$\sigma_{\text{hoop}} = 7.20$ ksi, $\sigma_{\text{long}} = 3.60$ ksi

8–10. The A-36-steel band is 2 in. wide and is secured around the smooth rigid cylinder. If the bolts are tightened so that the tension in them is 400 lb, determine the normal stress in the band, the pressure exerted on the cylinder, and the distance half the band stretches.

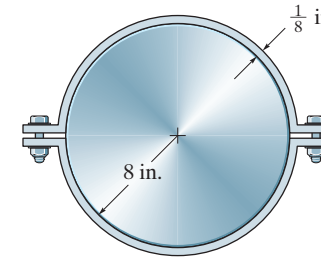

$$\sigma_1 = \frac{400}{2(1/8)(1)} = 1600 \text{ psi}$$ **Ans.**

$$\sigma_1 = \frac{pr}{t}; \quad 1600 = \frac{p(8)}{(1/8)}$$

$$p = 25 \text{ psi}$$ **Ans.**

$$\epsilon_1 = \frac{\sigma_1}{E} = \frac{1600}{29(10^6)} = 55.1724(10^{-6})$$

$$\delta = \epsilon_1 L = 55.1724(10^{-6})(\pi)\left(8 + \frac{1}{16}\right) = 0.00140 \text{ in.}$$ **Ans.**

Ans:
$\sigma_1 = 1.60$ ksi, $p = 25$ psi, $\delta = 0.00140$ in.

8–11. Two hemispheres having an inner radius of 2 ft and wall thickness of 0.25 in. are fitted together, and the inside gauge pressure is reduced to -10 psi. If the coefficient of static friction is $\mu_s = 0.5$ between the hemispheres, determine (a) the torque T needed to initiate the rotation of the top hemisphere relative to the bottom one, (b) the vertical force needed to pull the top hemisphere off the bottom one, and (c) the horizontal force needed to slide the top hemisphere off the bottom one.

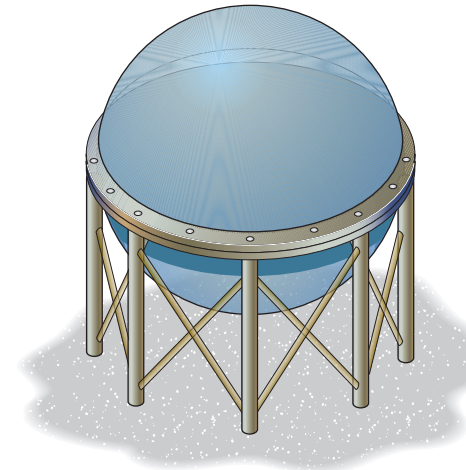

Normal Pressure: Vertical force equilibrium for FBD(a).

$$+\uparrow \Sigma F_y = 0; \qquad 10\left[\pi(24^2)\right] - N = 0 \qquad N = 5760\pi \text{ lb}$$

The Friction Force: Applying friction formula

$$F_f = \mu_s N = 0.5(5760\pi) = 2880\pi \text{ lb}$$

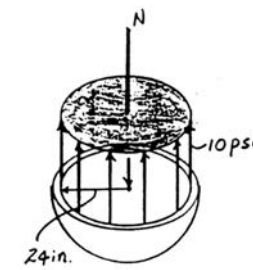

a) **The Required Torque:** In order to initiate rotation of the two hemispheres relative to each other, the torque must overcome the moment produced by the friction force about the center of the sphere.

$$T = F_f r = 2880\pi(2 + 0.125/12) = 18190 \text{ lb}\cdot\text{ft} = 18.2 \text{ kip}\cdot\text{ft} \qquad \textbf{Ans.}$$

b) **The Required Vertical Force:** In order to just pull the two hemispheres apart, the vertical force P must overcome the normal force.

$$P = N = 5760\pi = 18096 \text{ lb} = 18.1 \text{ kip} \qquad \textbf{Ans.}$$

c) **The Required Horizontal Force:** In order to just cause the two hemispheres to slide relative to each other, the horizontal force F must overcome the friction force.

$$F = F_f = 2880\pi = 9048 \text{ lb} = 9.05 \text{ kip} \qquad \textbf{Ans.}$$

Ans:
(a) $T = 18.2$ kip · ft,
(b) $P = 18.1$ kip,
(c) $F = 9.05$ kip

***8–12.** A pressure-vessel head is fabricated by gluing the circular plate to the end of the vessel as shown. If the vessel sustains an internal pressure of 450 kPa, determine the average shear stress in the glue and the state of stress in the wall of the vessel.

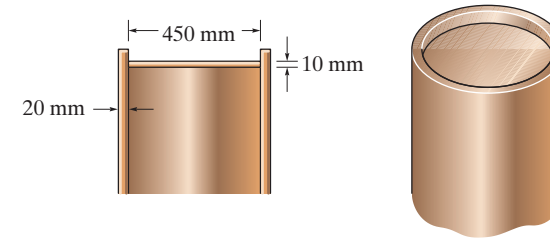

$+\uparrow \Sigma F_y = 0; \quad \pi(0.225)^2 450(10^3) - \tau_{avg}(2\pi)(0.225)(0.01) = 0;$

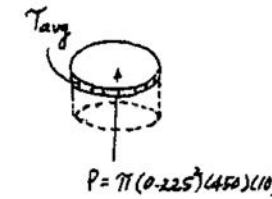

$\tau_{avg} = 5.06 \text{ MPa}$ **Ans.**

$$\sigma_1 = \frac{p\,r}{t} = \frac{450(10^3)(0.225)}{0.02} = 5.06 \text{ MPa}$$ **Ans.**

$$\sigma_2 = \frac{p\,r}{2\,t} = \frac{450(10^3)(0.225)}{2(0.02)} = 2.53 \text{ MPa}$$ **Ans.**

8–13. An A-36-steel hoop has an inner diameter of 23.99 in., thickness of 0.25 in., and width of 1 in. If it and the 24-in.-diameter rigid cylinder have a temperature of 65° F, determine the temperature to which the hoop should be heated in order for it to just slip over the cylinder. What is the pressure the hoop exerts on the cylinder, and the tensile stress in the ring when it cools back down to 65° F?

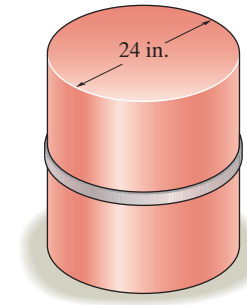

$\delta_T = \alpha \, \Delta T L$

$\pi(24) - \pi(23.99) = 6.60(10^{-6})(T_1 - 65)(\pi)(23.99)$

$T_1 = 128.16° \; F = 128°$ **Ans.**

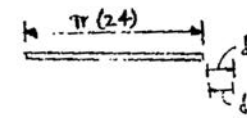

Cool down:

$\delta_F = \delta_T$

$$\frac{FL}{AE} = \alpha \, \Delta T L$$

$$\frac{F(\pi)(24)}{(1)(0.25)(29)(10^6)} = 6.60(10^{-6})(128.16 - 65)(\pi)(24)$$

$F = 3022.21$ lb

$\sigma_1 = \dfrac{F}{A}; \qquad \sigma_1 = \dfrac{3022.21}{(1)(0.25)} = 12\,088 \text{ psi} = 12.1 \text{ ksi}$ **Ans.**

$\sigma_1 = \dfrac{pr}{t}; \qquad 12\,088 = \dfrac{p(12)}{(0.25)}$

$P = 252$ psi **Ans.**

Ans:
$T_1 = 128°$, $\sigma_1 = 12.1$ ksi, $p = 252$ psi

8–14. The ring, having the dimensions shown, is placed over a flexible membrane which is pumped up with a pressure p. Determine the change in the internal radius of the ring after this pressure is applied. The modulus of elasticity for the ring is E.

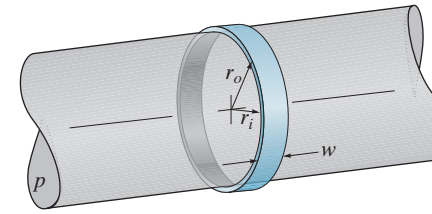

Equilibrium for the Ring: From the FBD

$$\overset{+}{\rightarrow} \Sigma F_x = 0; \qquad 2P - 2pr_i w = 0 \qquad P = pr_i w$$

Hoop Stress and Strain for the Ring:

$$\sigma_1 = \frac{P}{A} = \frac{pr_i w}{(r_o - r_i)w} = \frac{pr_i}{r_o - r_i}$$

Using Hooke's Law

$$\epsilon_1 = \frac{\sigma_1}{E} = \frac{pr_i}{E(r_o - r_i)} \qquad (1)$$

However, $\epsilon_1 = \dfrac{2\pi(r_i)_1 - 2\pi r_i}{2\pi r_i} = \dfrac{(r_i)_1 - r_i}{r_i} = \dfrac{\delta r_i}{r_i}.$

Then, from Eq. (1)

$$\frac{\delta r_i}{r_i} = \frac{pr_i}{E(r_o - r_i)}$$

$$\delta r_i = \frac{pr_i^2}{E(r_o - r_i)} \qquad \textbf{Ans.}$$

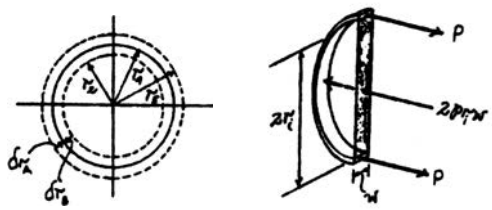

Ans:
$\delta r_i = \dfrac{pr_i^2}{E(r_o - r_i)}$

8–15. The inner ring A has an inner radius r_1 and outer radius r_2. Before heating, the outer ring B has an inner radius r_3 and an outer radius r_4, and $r_2 > r_3$. If the outer ring is heated and then fitted over the inner ring, determine the pressure between the two rings when ring B reaches the temperature of the inner ring. The material has a modulus of elasticity of E and a coefficient of thermal expansion of α.

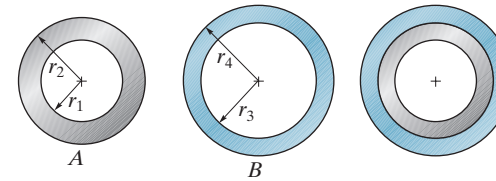

Equilibrium for the Ring: From the FBD

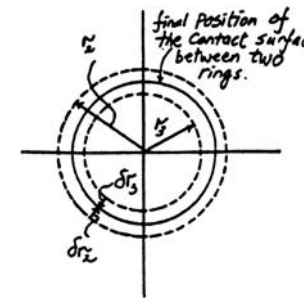

$$\xrightarrow{+} \Sigma F_x = 0; \qquad 2P - 2pr_i w = 0 \qquad P = pr_i w$$

Hoop Stress and Strain for the Ring:

$$\sigma_1 = \frac{P}{A} = \frac{pr_i w}{(r_o - r_i)w} = \frac{pr_i}{r_o - r_i}$$

Using Hooke's law

$$\epsilon_1 = \frac{\sigma_1}{E} = \frac{pr_i}{E(r_o - r_i)} \qquad (1)$$

However, $\epsilon_1 = \dfrac{2\pi(r_i)_1 - 2\pi r_i}{2\pi r_i} = \dfrac{(r_i)_1 - r_i}{r_i} = \dfrac{\delta r_i}{r_i}.$

Then, from Eq. (1)

$$\frac{\delta r_i}{r_i} = \frac{pr_i}{E(r_o - r_i)}$$

$$\delta r_i = \frac{pr_i^2}{E(r_o - r_i)}$$

Compatibility: The pressure between the rings requires

$$\delta r_2 + \delta r_3 = r_2 - r_3 \qquad (2)$$

From the result obtained above

$$\delta r_2 = \frac{pr_2^2}{E(r_2 - r_1)} \qquad \delta r_3 = \frac{pr_3^2}{E(r_4 - r_3)}$$

Substitute into Eq. (2)

$$\frac{pr_2^2}{E(r_2 - r_1)} + \frac{pr_3^2}{E(r_4 - r_3)} = r_2 - r_3$$

$$p = \frac{E(r_2 - r_3)}{\dfrac{r_2^2}{r_2 - r_1} + \dfrac{r_3^2}{r_4 - r_3}} \qquad \textbf{Ans.}$$

Ans:

$$p = \frac{E(r_2 - r_3)}{\dfrac{r_2^2}{r_2 - r_1} + \dfrac{r_3^2}{r_4 - r_3}}$$

***8–16.** A closed-ended pressure vessel is fabricated by cross winding glass filaments over a mandrel, so that the wall thickness t of the vessel is composed entirely of filament and an expoxy binder as shown in the figure. Consider a segment of the vessel of width w and wrapped at an angle θ. If the vessel is subjected to an internal pressure p, show that the force in the segment is $F_\theta = \sigma_0 wt$, where σ_0 is the stress in the filaments. Also, show that the stresses in the hoop and longitudinal directions are $\sigma_h = \sigma_0 \sin^2\theta$ and $\sigma_1 = \sigma_0 \cos^2\theta$, respectively. At what angle θ (optimum winding angle) would the filaments have to be would so that the hoop and longitudinal stresses are equivalent?

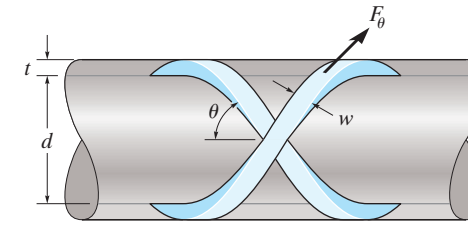

The Hoop and Longitudinal Stresses: Applying Eq. 8–1 and Eq. 8–2

$$\sigma_1 = \frac{pr}{t} = \frac{p\left(\frac{d}{2}\right)}{t} = \frac{pd}{2t}$$

$$\sigma_2 = \frac{pr}{2t} = \frac{p\left(\frac{d}{2}\right)}{2t} = \frac{pd}{4t}$$

The Hoop and Longitudinal Force for Filament:

$$F_1 = \sigma_1 A = \frac{pd}{2r}\left(\frac{w}{\sin\theta}t\right) = \frac{pdw}{2\sin\theta}$$

$$F_1 = \sigma_2 A = \frac{pd}{4t}\left(\frac{w}{\cos\theta}t\right) = \frac{pdw}{4\cos\theta}$$

Hence,

$$F_\theta = \sqrt{F_b^2 + F_t^2}$$

$$= \sqrt{\left(\frac{pdw}{2\sin\theta}\right)^2 + \left(\frac{pdw}{4\cos\theta}\right)^2}$$

$$= \frac{pdw}{4}\sqrt{\frac{4}{\sin^2\theta} + \frac{1}{\cos^2\theta}}$$

$$= \frac{pdw}{4}\sqrt{\frac{4\cos^2\theta + \sin^2\theta}{\sin^2\theta}}$$

$$= \frac{pdw}{2\sqrt{2}\sin 2\theta}\sqrt{3\cos 2\theta + 5}$$

$$\sigma_\theta = \frac{F_\theta}{A} = \frac{\dfrac{pdw}{2\sqrt{2}\sin 2\theta}\sqrt{3\cos 2\theta + 5}}{wt}$$

$$= \frac{pd}{2\sqrt{2}t}\left(\frac{\sqrt{3\cos 2\theta + 5}}{\sin 2\theta}\right) \qquad \textit{(Q.E.D)}$$

$\dfrac{d\sigma_\theta}{d\theta} = 0$ when σ_θ is minimum.

$$\frac{d\sigma_\theta}{d\theta} = \frac{pd}{2\sqrt{2}r}\left[-\frac{2\cos 2\theta}{\sin^2 2\theta}\left(\sqrt{3\cos 2\theta + 5}\right) - \frac{3}{\sqrt{3\cos 2\theta + 5}}\right] = 0$$

8–16. (Continued)

$$\frac{2\cos 2\theta}{\sin^2 2\theta}\left(\sqrt{3\cos 2\theta + 5}\right) + \frac{3}{\sqrt{3\cos 2\theta + 5}} = 0$$

$$\left(\sqrt{3\cos 2\theta + 5}\right)\left(\frac{2\cos 2\theta}{\sin^2 2\theta} + \frac{3}{3\cos 2\theta + 5}\right) = 0$$

$$\left(\sqrt{3\cos 2\theta + 5}\right)\left[\frac{3\cos^2 2\theta + 10\cos 2\theta + 3}{\sin^2 2\theta(3\cos 2\theta + 5)}\right] = 0$$

However, $\sqrt{3\cos 2\theta + 5} \neq 0$. Therefore,

$$\frac{3\cos^2 2\theta + 10\cos 2\theta + 3}{\sin^2 2\theta(3\cos 2\theta + 5)} = 0$$

$$3\cos^2 2\theta + 10\cos 2\theta + 3 = 0$$

$$\cos 2\theta = \frac{-10 \pm \sqrt{10^2 - 4(3)(3)}}{2(3)}$$

$$\cos 2\theta = -0.3333$$

$$\theta = 54.7^\circ \qquad \textbf{Ans.}$$

Force in θ Direction: Consider a portion of the cylinder. For a filament wire the cross-sectional area is $A = wt$, then

$$F_\theta = \sigma_0 wt \qquad \textit{(Q.E.D.)}$$

Hoop Stress: The force in hoop direction is $F_h = F_\theta \sin\theta = \sigma_0 wt \sin\theta$ and the area is $A = \dfrac{wt}{\sin\theta}$. Then due to the internal pressure p,

$$\sigma_h = \frac{F_h}{A} = \frac{\sigma_0 wt \sin\theta}{wt/\sin\theta}$$

$$= \sigma_0 \sin^2\theta \qquad \textit{(Q. E. D.)}$$

Longitudinal Stress: The force in the longitudinal direction is $F_1 = F_\theta \cos\theta = \sigma_\theta wt \cos\theta$ and the area is $A = \dfrac{wt}{\sin\theta}$. Then due to the internal pressure p,

$$\sigma_t = \frac{F_h}{A} = \frac{\sigma_0 wt \cos\theta}{wt/\cos\theta}$$

$$= \sigma_0 \cos^2\theta \qquad \textit{(Q. E. D.)}$$

Optimum Wrap Angle: This requires $\dfrac{\sigma_h}{\sigma_l} = \dfrac{pd/2t}{pd/4t} = 2$. Then

$$\frac{\sigma_h}{\sigma_l} = \frac{\sigma_0 \sin^2\theta}{\sigma_0 \cos^2\theta} = 2$$

$$\tan^2\theta = 2$$

$$\theta = 54.7^\circ \qquad \textbf{Ans.}$$

8–17. In order to increase the strength of the pressure vessel, filament winding of the same material is wrapped around the circumference of the vessel as shown. If the pretension in the filament is T and the vessel is subjected to an internal pressure p, determine the hoop stresses in the filament and in the wall of the vessel. Use the free-body diagram shown, and assume the filament winding has a thickness t' and width w for a corresponding length L of the vessel.

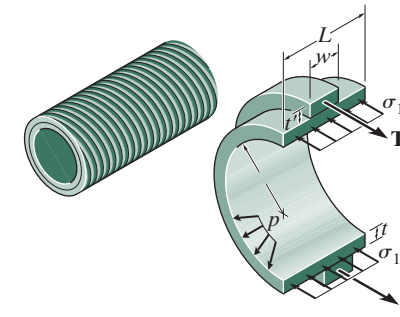

Normal Stress in the Wall and Filament Before the Internal Pressure is Applied: The entire length L of wall is subjected to pretension filament force T. Hence, from equilibrium, the normal stress in the wall at this state is

$$2T - (\sigma')_w (2Lt) = 0 \qquad (\sigma')_w = \frac{T}{Lt}$$

and for the filament the normal stress is

$$(\sigma')_{fil} = \frac{T}{wt'}$$

Normal Stress in the Wall and Filament After the Internal Pressure is Applied: In order to use $\sigma_1 = pr/t$, developed for a vessel of uniform thickness, we redistribute the filament's cross-section as if it were thinner and wider, to cover the vessel with no gaps. The modified filament has width L and thickness $t'w/L$, still with cross-sectional area wt' subjected to tension T. Then the stress in the filament becomes

$$\sigma_{fil} = \sigma + (\sigma')_{fil} = \frac{pr}{(t + t'w/L)} + \frac{T}{wt'} \qquad \textbf{Ans.}$$

And for the wall,

$$\sigma_w = \sigma - (\sigma')_w = \frac{pr}{(t + t'w/L)} - \frac{T}{Lt} \qquad \textbf{Ans.}$$

Check: $2wt'\sigma_{fil} + 2Lt\sigma_w = 2rLp$ OK

Ans:

$$\sigma_{fil} = \frac{pr}{t + t'w/L} + \frac{T}{wt'},$$

$$\sigma_w = \frac{pr}{t + t'w/L} - \frac{T}{Lt}$$

8–18. The vertical force **P** acts on the bottom of the plate having a negligible weight. Determine the shortest distance d to the edge of the plate at which it can be applied so that it produces no compressive stresses on the plate at section a–a. The plate has a thickness of 10 mm and **P** acts along the center line of this thickness.

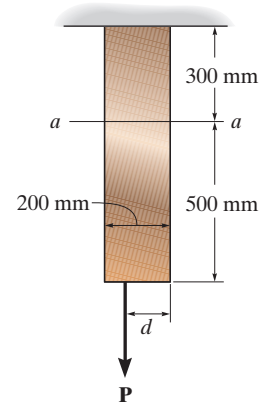

$$\sigma_A = 0 = \sigma_a - \sigma_b$$

$$0 = \frac{P}{A} - \frac{M\,c}{I}$$

$$0 = \frac{P}{(0.2)(0.01)} - \frac{P(0.1 - d)(0.1)}{\frac{1}{12}(0.01)(0.2^3)}$$

$$P(-1000 + 15000\,d) = 0$$

$$d = 0.0667 \text{ m} = 66.7 \text{ mm}$$ **Ans.**

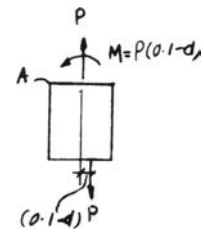

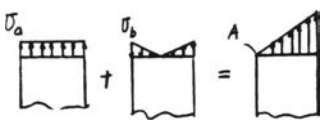

Ans:
$d = 66.7$ mm

8–19. Determine the maximum and minimum normal stress in the bracket at section *a–a* when the load is applied at $x = 0$.

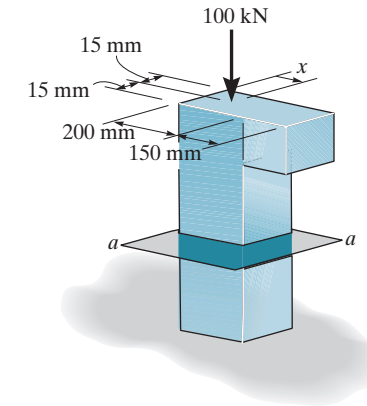

Consider the equilibrium of the FBD of the top cut segment in Fig. *a*,

$+\uparrow \Sigma F_y = 0; \qquad N - 100 = 0 \qquad N = 100 \text{ kN}$

$\circlearrowleft + \Sigma M_C = 0; \qquad 100(0.1) - M = 0 \qquad M = 10 \text{ kN} \cdot \text{m}$

$A = 0.2(0.03) = 0.006 \text{ m}^2 \qquad I = \frac{1}{12}(0.03)(0.2^3) = 20.0(10^{-6}) \text{ m}^4$

The normal stress developed is the combination of axial and bending stress. Thus,

$$\sigma = \frac{N}{A} \pm \frac{M_y}{I}$$

For the left edge fiber, $y = C = 0.1$ m. Then

$$\sigma_L = -\frac{100(10^3)}{0.006} - \frac{10(10^3)(0.1)}{20.0(10^{-6})}$$

$$= -66.67(10^6) \text{ Pa} = 66.7 \text{ MPa (C)} \qquad \textbf{Ans.}$$

For the right edge fiber, $y = 0.1$ m. Then

$$\sigma_R = -\frac{100\,(10^3)}{0.006} + \frac{10(10^3)(0.1)}{20.0(10^{-6})} = 33.3 \text{ MPa (T)} \qquad \textbf{Ans.}$$

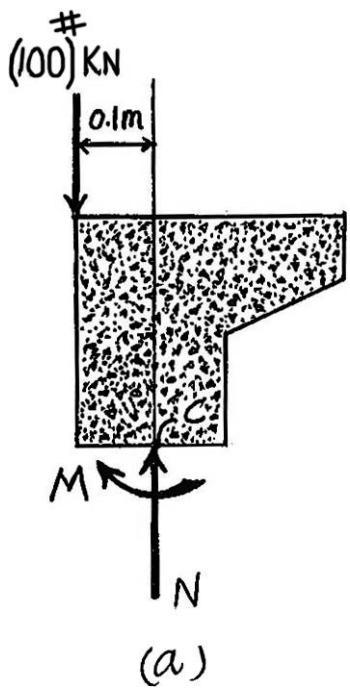

Ans:
$\sigma_L = 66.7$ MPa (C), $\sigma_R = 33.3$ MPa (T)

***8–20.** Determine the maximum and minimum normal stress in the bracket at section *a–a* when the load is applied at $x = 300$ mm.

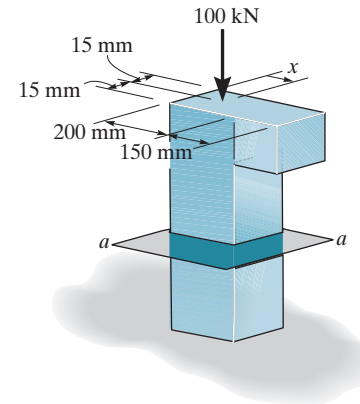

Consider the equilibrium of the FBD of the top cut segment in Fig. *a*,

$+\uparrow \Sigma F_y = 0; \qquad N - 100 = 0 \qquad N = 100 \text{ kN}$

$\circlearrowleft + \Sigma M_C = 0; \qquad M - 100(0.2) = 0 \qquad M = 20 \text{ kN} \cdot \text{m}$

$A = 0.2\,(0.03) = 0.006 \text{ m}^2 \qquad I = \frac{1}{12}(0.03)(0.2^3) = 20.0(10^{-6}) \text{ m}^4$

The normal stress developed is the combination of axial and bending stress. Thus,

$$\sigma = \frac{N}{A} \pm \frac{M_y}{I}$$

For the left edge fiber, $y = C = 0.1$ m. Then

$$\sigma_R = -\frac{100(10^3)}{0.006} + \frac{20.0(10^3)(0.1)}{20.0(10^{-6})}$$

$$= 83.33(10^6) \text{ Pa} = 83.3 \text{ MPa (T)} \qquad \textbf{Ans.}$$

For the right edge fiber, $y = C = 0.1$ m. Thus

$$\sigma_R = -\frac{100(10^3)}{0.006} - \frac{20.0(10^3)(0.1)}{20.0(10^{-6})}$$

$$= 117 \text{ MPa (C)} \qquad \textbf{Ans.}$$

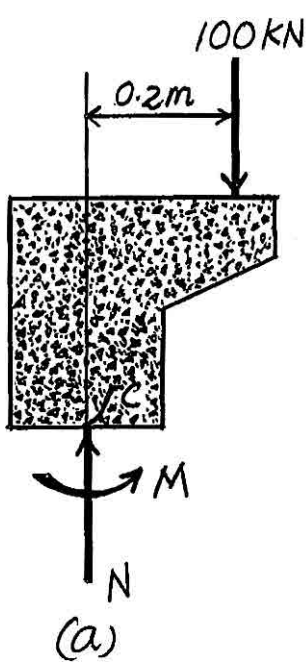

8–21. If the load has a weight of 600 lb, determine the maximum normal stress developed on the cross section of the supporting member at section *a–a*. Also, plot the normal stress distribution over the cross section.

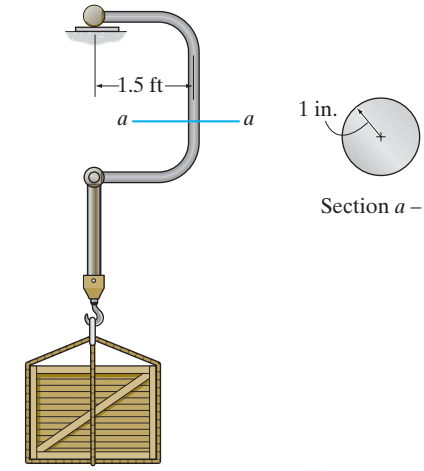

Internal Loadings: Consider the equilibrium of the free-body diagram of the bottom cut segment shown in Fig. a.

$$\circlearrowleft + \uparrow \Sigma F_y = 0; \qquad N - 600 = 0 \qquad N = 600 \text{ lb}$$

$$\circlearrowleft + \Sigma M_C = 0; \qquad 600(1.5) - M = 0 \qquad M = 900 \text{ lb} \cdot \text{ft}$$

Section Properties: The cross-sectional area and the moment of inertia about the centroidal axis of the member are

$$A = \pi(1^2) = \pi \text{ in}^2 \qquad I = \frac{\pi}{4}(1^4) = \frac{\pi}{4} \text{ in}^4$$

Normal Stress: The normal stress is the combination of axial and bending stress. Thus,

$$\sigma = \frac{N}{A} \pm \frac{Mc}{I}$$

By observation, the maximum normal stress occurs at point *B*, Fig. *b*. Thus,

$$\sigma_{\max} = \sigma_B = \frac{600}{\pi} + \frac{900(12)(1)}{\pi/4} = 13.9 \text{ ksi (T)} \qquad \textbf{Ans.}$$

For Point *A*,

$$\sigma_A = \frac{600}{\pi} + -\frac{900(12)(1)}{\pi/4} = -13.6 \text{ ksi} = 13.6 \text{ ksi (C)} \qquad \textbf{Ans.}$$

Using these results, the normal stress distribution over the cross section is shown in Fig. *b*. The location of the neutral axis can be determined from

$$\frac{\pi}{13.9} = \frac{2 - x}{13.6}; \qquad x = 1.01 \text{ in.}$$

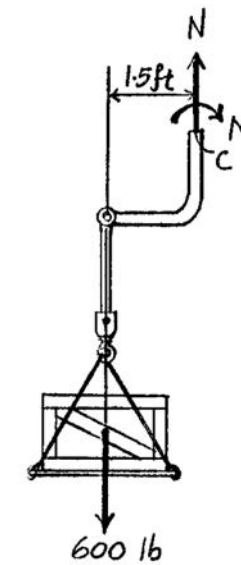

(a)

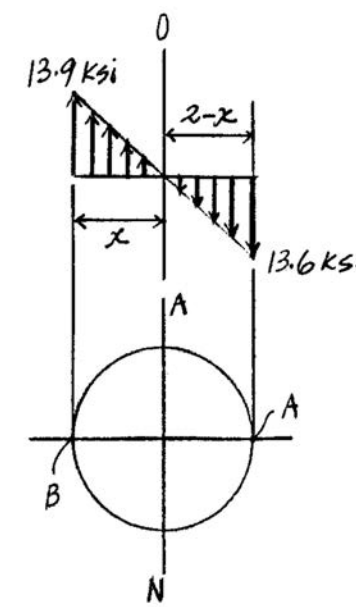

(b)

Ans:
$\sigma_{\max} = \sigma_L = 13.9$ ksi (T), $\sigma_R = 13.6$ ksi (C)

8–22. The clamp is made from members AB and AC, which are pin connected at A. If it exerts a compressive force at C and B of 180 N, determine the maximum compressive stress in the clamp at section a–a. The screw EF is subjected only to a tensile force along its axis.

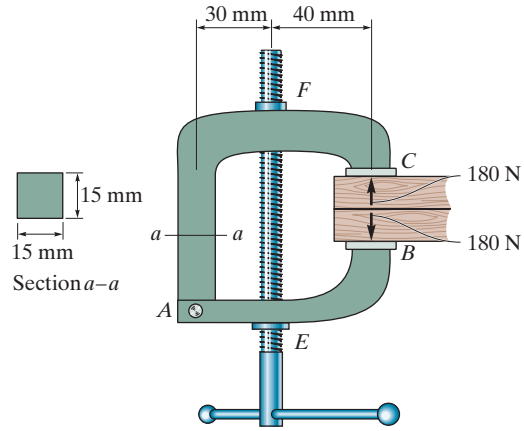

There is no moment in this problem. Therefore, the compressive stress is produced by axial force only.

$$\sigma_{max} = \frac{P}{A} = \frac{240}{(0.015)(0.015)} = 1.07 \text{ MPa} \qquad \textbf{Ans.}$$

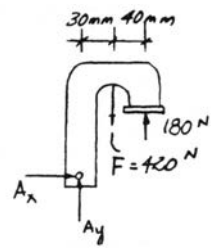

Ans:
$\sigma_{max} = 1.07$ MPa

8–23. The clamp is made from members AB and AC, which are pin connected at A. If it exerts a compressive force at C and B of 180 N, sketch the stress distribution acting over section a–a. The screw EF is subjected only to a tensile force along its axis.

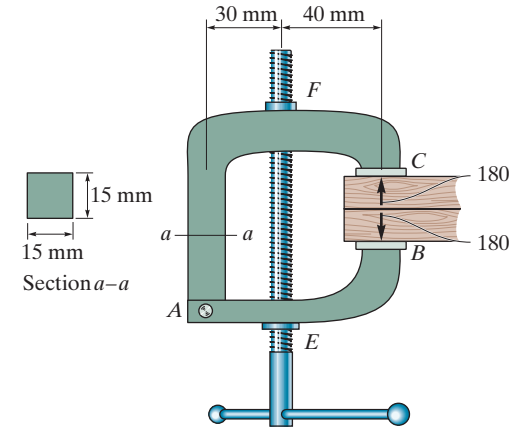

There is no moment in this problem. Therefore, the compressive stress is produced by axial force only.

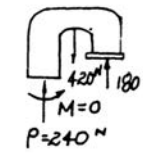

$$\sigma_{\text{const}} = \frac{P}{A} = \frac{240}{(0.015)(0.015)} = 1.07 \text{ MPa}$$

Ans:
$\sigma_{\text{const}} = 1.07$ MPa

***8–24.** The bearing pin supports the load of 700 lb. Determine the stress components in the support member at point A. The support is 0.5 in. thick.

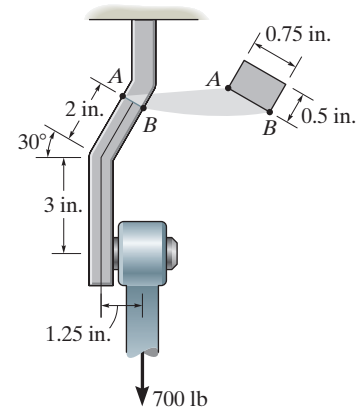

$\nearrow + \Sigma F_x = 0; \qquad N - 700 \cos 30° = 0; \qquad N = 606.218 \text{ lb}$

$\nwarrow + \Sigma F_y = 0; \qquad V - 700 \sin 30° = 0; \qquad V = 350 \text{ lb}$

$\circlearrowleft + \Sigma M = 0; \qquad M - 700(1.25 - 2 \sin 30°) = 0; \qquad M = 175 \text{ lb} \cdot \text{in.}$

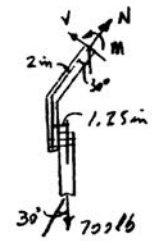

$$\sigma_A = \frac{N}{A} - \frac{Mc}{I} = \frac{606.218}{(0.75)(0.5)} - \frac{(175)(0.375)}{\frac{1}{12}(0.5)(0.75)^3}$$

$\sigma_A = -2.12 \text{ ksi}$ **Ans.**

$\tau_A = 0 \qquad (\text{since } Q_A = 0)$ **Ans.**

8–25. The bearing pin supports the load of 700 lb. Determine the stress components in the support member at point B. The support is 0.5 in. thick.

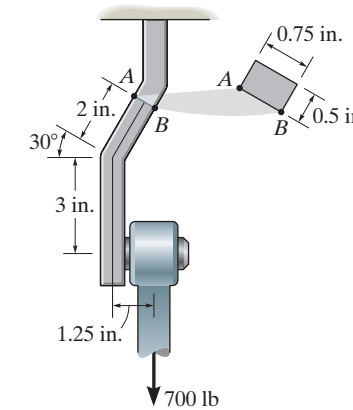

$\nearrow + \Sigma F_x = 0; \qquad N - 700 \cos 30° = 0; \qquad N = 606.218 \text{ lb}$

$\nwarrow + \Sigma F_y = 0; \qquad V - 700 \sin 30° = 0; \qquad V = 350 \text{ lb}$

$\circlearrowleft + \Sigma M = 0; \qquad M - 700(1.25 - 2 \sin 30°) = 0; \qquad M = 175 \text{ lb} \cdot \text{in.}$

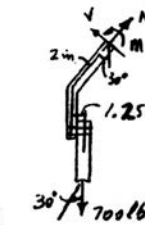

$$\sigma_B = \frac{N}{A} + \frac{Mc}{I} = \frac{606.218}{(0.75)(0.5)} + \frac{175(0.375)}{\frac{1}{12}(0.5)(0.75)^3}$$

$\sigma_B = 5.35 \text{ ksi}$ **Ans.**

$\tau_B = 0 \qquad (\text{since } Q_B = 0)$ **Ans.**

Ans:
$\sigma_B = 5.35 \text{ ksi}, \tau_B = 0$

8–26. The column is built up by gluing the two identical boards together. Determine the maximum normal stress developed on the cross section when the eccentric force of $P = 50$ kN is applied.

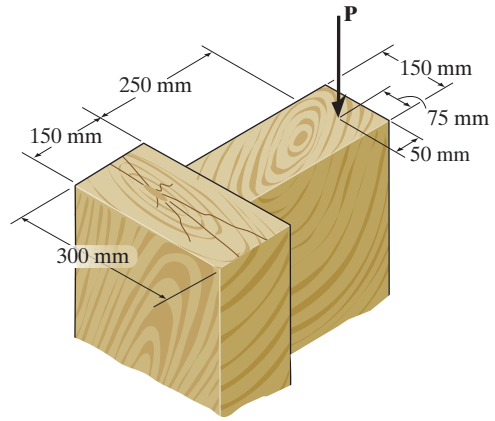

Section Properties: The location of the centroid of the cross section, Fig. *a*, is

$$\bar{y} = \frac{\Sigma \bar{y} A}{\Sigma A} = \frac{0.075(0.15)(0.3) + 0.3(0.3)(0.15)}{0.15(0.3) + 0.3(0.15)} = 0.1875 \text{ m}$$

The cross - sectional area and the moment of inertia about the z axis of the cross section are

$$A = 0.15(0.3) + 0.3(0.15) = 0.09 \text{ m}^2$$

$$I_z = \frac{1}{12}(0.3)(0.15^3) + 0.3(0.15)(0.1875 - 0.075)^2 + \frac{1}{12}(0.15)(0.3^3) + 0.15(0.3)(0.3 - 0.1875)^2$$

$$= 1.5609(10^{-3}) \text{ m}^4$$

Equivalent Force System: Referring to Fig. *b*,

$$+\uparrow \Sigma F_x = (F_R)_x; \qquad -50 = -F \qquad F = 50 \text{ kN}$$

$$\Sigma M_z = (M_R)_z; \qquad -50(0.2125) = -M \qquad M = 10.625 \text{ kN} \cdot \text{m}$$

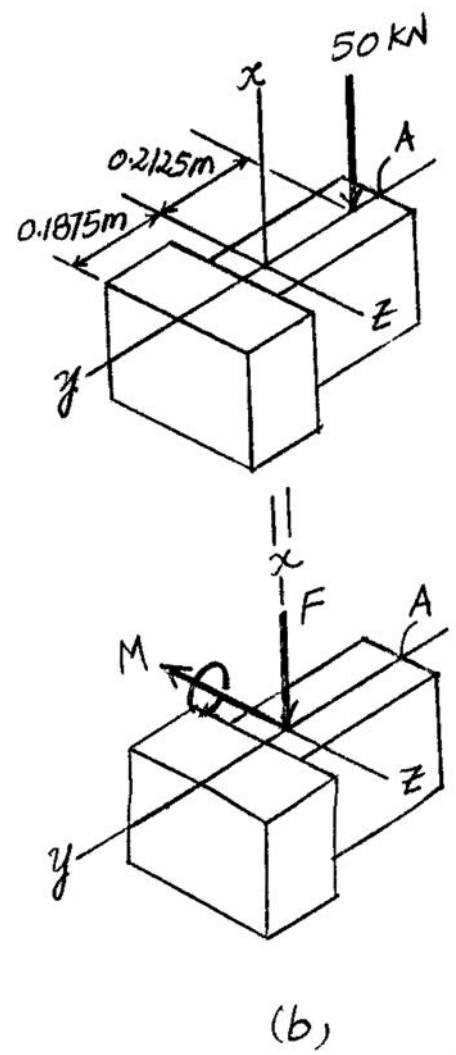

Normal Stress: The normal stress is a combination of axial and bending stress. Thus,

$$\sigma = \frac{N}{A} + \frac{My}{I}$$

By inspection, the maximum normal stress occurs at points along the edge where $y = 0.45 - 0.1875 = 0.2625$ m such as point A. Thus,

$$\sigma_{\max} = \frac{-50(10^3)}{0.09} - \frac{10.625(10^3)(0.2625)}{1.5609(10^{-3})}$$

$$= -2.342 \text{ MPa} = 2.34 \text{ MPa (C)} \qquad \textbf{Ans.}$$

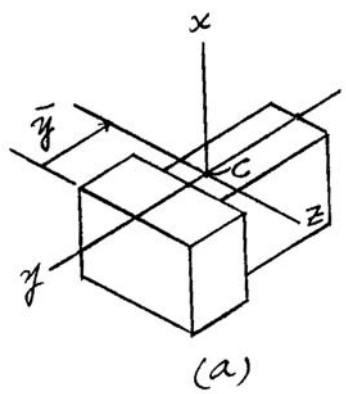

Ans:
$\sigma_{\max} = 2.34$ MPa (C)

8–27. The column is built up by gluing the two identical boards together. If the wood has an allowable normal stress of $\sigma_{\text{allow}} = 6$ MPa, determine the maximum allowable eccentric force **P** that can be applied to the column.

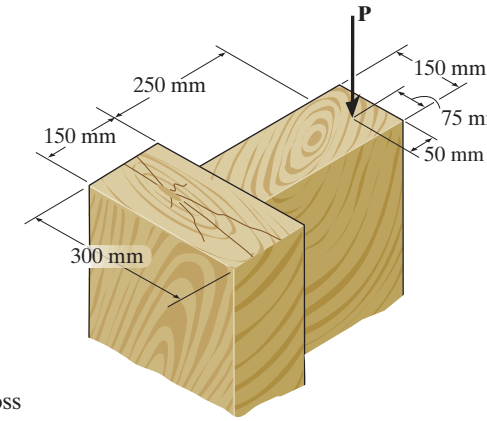

Section Properties: The location of the centroid c of the cross section, Fig. a, is

$$\bar{y} = \frac{\Sigma \bar{y} A}{\Sigma A} = \frac{0.075(0.15)(0.3) + 0.3(0.3)(0.15)}{0.15(0.3) + 0.3(0.15)} = 0.1875 \text{ m}$$

The cross-sectional area and the moment of inertia about the z axis of the cross section are

$$A = 0.15(0.3) + 0.3(0.15) = 0.09 \text{ m}^2$$

$$I_z = \frac{1}{12}(0.3)(0.15^3) + 0.3(0.15)(0.1875 - 0.075)^2 + \frac{1}{12}(0.15)(0.3^3) + 0.15(0.3)(0.3 - 0.1875)^2$$

$$= 1.5609(10^{-3}) \text{ m}^4$$

Equivalent Force System: Referring to Fig. b,

$+\uparrow \Sigma F_x = (F_R)_x;$ $\quad -P = -F \quad F = P$

$\Sigma M_z = (M_R)_z;$ $\quad -P(0.2125) = -M \quad M = 0.2125P$

Normal Stress: The normal stress is a combination of axial and bending stress. Thus,

$$F = \frac{N}{A} + \frac{My}{I}$$

By inspection, the maximum normal stress, Which is compression, occurs at points along the edge where $y = 0.45 - 0.1875 = 0.2625$ m such as point A. Thus,

$$-6(10^6) = \frac{-P}{0.09} - \frac{0.2125P(0.2625)}{1.5609(10^{-3})}$$

$$P = 128\,076.92 \text{ N} = 128 \text{ kN}$$ **Ans.**

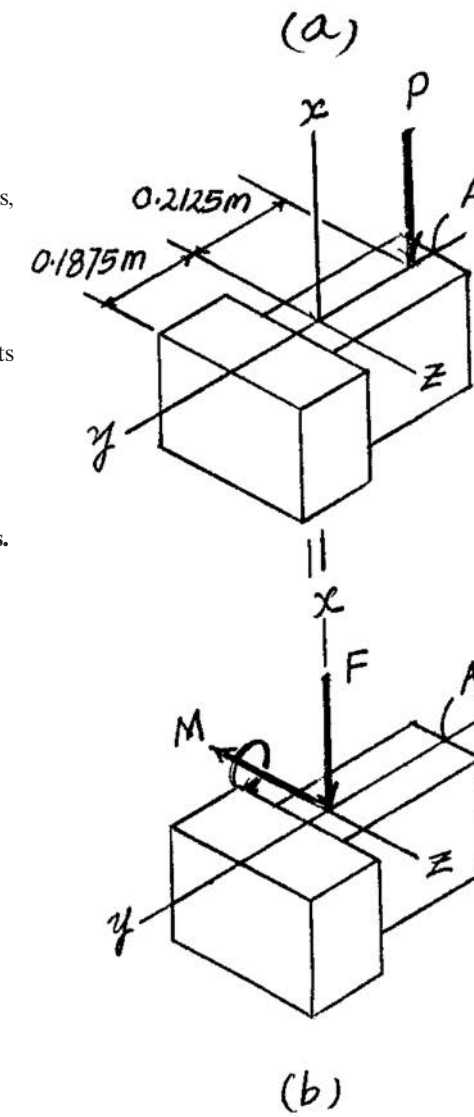

Ans:
$P = 128$ kN

***8–28.** The cylindrical post, having a diameter of 40 mm, is being pulled from the ground using a sling of negligible thickness. If the rope is subjected to a vertical force of $P = 500$ N, determine the normal stress at points A and B. Show the results on a volume element located at each of these points.

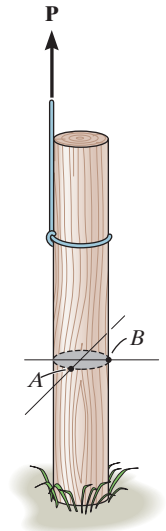

$$I = \frac{1}{4}\pi r^4 = \frac{1}{4}(\pi)(0.02^4) = 0.1256637(10^{-6})\ \text{m}^4$$

$$A = \pi r^2 = \pi(0.02^2) = 1.256637(10^{-3})\ \text{m}^2$$

$$\sigma_A = \frac{P}{A} + \frac{Mx}{I}$$

$$= \frac{500}{1.256637(10^{-3})} + 0 = 0.398\ \text{MPa} \qquad \textbf{Ans.}$$

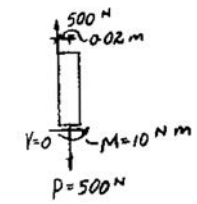

$$\sigma_B = \frac{P}{A} - \frac{Mc}{I}$$

$$= \frac{500}{1.256637(10^{-3})} - \frac{10(0.02)}{0.1256637(10^{-6})}$$

$$= -1.19\ \text{MPa} \qquad \textbf{Ans.}$$

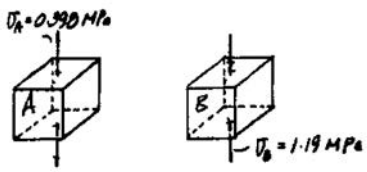

8–29. Determine the maximum load P that can be applied to the sling having a negligible thickness so that the normal stress in the post does not exceed $\sigma_{\text{allow}} = 30$ MPa. The post has a diameter of 50 mm.

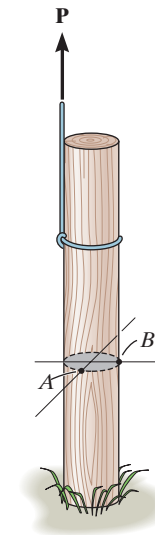

$$+\downarrow \Sigma F = 0; \qquad N - P = 0; \qquad N = P$$

$$\circlearrowleft + \Sigma M = 0; \qquad M - P(0.025) = 0; \qquad M = 0.025P$$

$$A = \frac{\pi}{4} d^2 = \pi(0.025^2) = 0.625(10^{-3})\pi \text{ m}^2$$

$$I = \frac{\pi}{4} r^4 = \frac{\pi}{4}(0.025^4) = 97.65625(10^{-9})\pi \text{ m}^4$$

$$\sigma = \frac{N}{A} + \frac{My}{I}$$

$$\sigma = 30(10^6) = \frac{P}{0.625(10^{-3})\pi} + \frac{P(0.025)(0.025)}{97.65625(10^{-9})\pi}$$

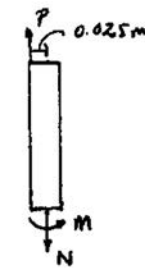

$P = 11.8$ kN **Ans.**

Ans:
$P = 11.8$ kN

8–30. The rib-joint pliers are used to grip the smooth pipe C. If the force of 100 N is applied to the handles, determine the state of stress at points A and B on the cross section of the jaw at section $a-a$. Indicate the results on an element at each point.

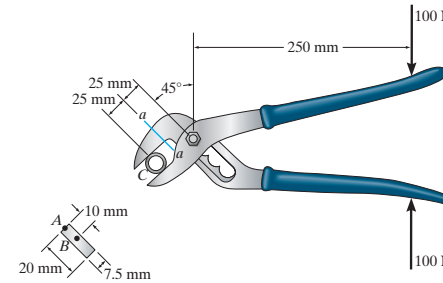

Section $a-a$

Support Reactions: Referring to the free-body diagram of the handle shown in Fig. a,

$$\circlearrowleft + \Sigma M_D = 0; \qquad 100(0.25) - F_C(0.05) = 0 \qquad F_C = 500 \text{ N}$$

Internal Loadings: Consider the equilibrium of the free-body diagram of the segment shown in Fig. b,

$$\Sigma F_{y'} = 0; \qquad 500 - V = 0 \qquad V = 500 \text{ N}$$

$$\circlearrowleft + \Sigma M_C = 0; \qquad M - 500(0.025) = 0 \qquad M = 12.5 \text{ N} \cdot \text{m}$$

Section Properties: The moment of inertia of the cross section about the centroidal axis is

$$I = \frac{1}{12}(0.0075)(0.02^3) = 5(10^{-9}) \text{ m}^4$$

Referring to Fig. c, Q_A and Q_B are

$$Q_A = 0$$

$$Q_B = \bar{y}'A' = 0.005(0.01)(0.0075) = 0.375(10^{-6}) \text{ m}^3$$

Normal Stress: The normal stress is contributed by bending stress only. Thus

$$\sigma = \frac{My}{I}$$

For point A, $y = 0.01$ m. Then

$$\sigma_A = -\frac{12.5(0.01)}{5(10^{-9})} = -25 \text{ MPa} = 25 \text{ MPa (C)} \qquad \textbf{Ans.}$$

For point B, $y = 0$. Then

$$\sigma_B = 0 \qquad \textbf{Ans.}$$

Shear Stress: The shear stress is contributed by transverse shear stress only. Thus,

$$\tau_A = \frac{VQ_A}{It} = 0 \qquad \textbf{Ans.}$$

$$\tau_B = \frac{VQ_B}{It} = \frac{500[0.375(10^{-6})]}{5(10^{-9})(0.0075)} = 5 \text{ MPa} \qquad \textbf{Ans.}$$

The state of stress of points A and B are represented by the elements shown in Figs. d and e respectively.

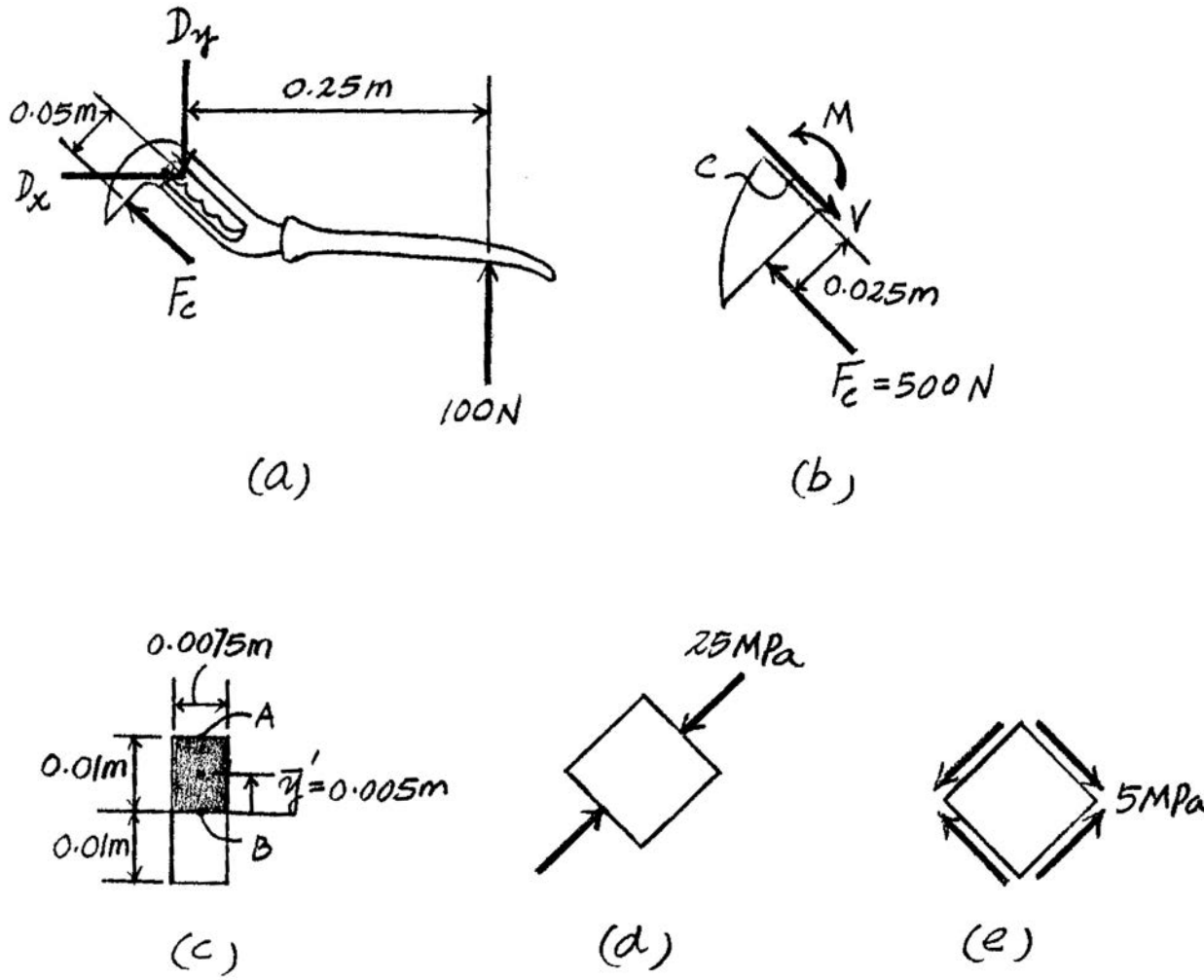

Ans:
$\sigma_A = 25$ MPa (C), $\sigma_B = 0$,
$\tau_A = 0$, $\tau_B = 5$ MPa

8–31. Determine the smallest distance d to the edge of the plate at which the force **P** can be applied so that it produces no compressive stresses in the plate at section a–a. The plate has a thickness of 20 mm and **P** acts along the centerline of this thickness.

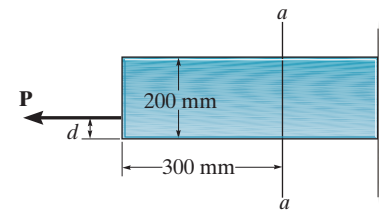

Consider the equilibrium of the FBD of the left cut segment in Fig. a,

$\overset{+}{\rightarrow} \Sigma F_x = 0; \qquad N - P = 0 \qquad N = P$

$\circlearrowleft + \Sigma M_C = 0; \qquad M - P(0.1 - d) = 0 \qquad M = P(0.1 - d)$

$A = 0.2\,(0.02) = 0.004\ \text{m}^4 \qquad I = \dfrac{1}{12}(0.02)(0.2^3) = 13.3333(10^{-6})\ \text{m}^4$

The normal stress developed is the combination of axial and bending stress. Thus,

$$\sigma = \frac{N}{A} \pm \frac{My}{I}$$

Since no compressive stress is desired, the normal stress at the top edge fiber must be equal to zero. Thus,

$$0 = \frac{P}{0.004} \pm \frac{P(0.1 - d)(0.1)}{13.3333\,(10^{-6})}$$

$$0 = 250\,P - 7500\,P\,(0.1 - d)$$

$$d = 0.06667\ \text{m} = 66.7\ \text{mm} \qquad \textbf{Ans.}$$

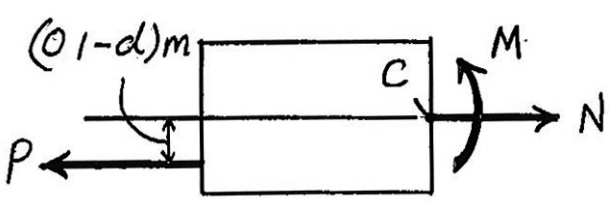

(a)

Ans:
$d = 66.7$ mm

***8–32.** The horizontal force of $P = 80$ kN acts at the end of the plate. The plate has a thickness of 10 mm and **P** acts along the centerline of this thickness such that $d = 50$ mm. Plot the distribution of normal stress acting along section $a-a$.

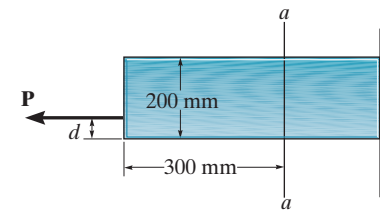

Consider the equilibrium of the FBD of the left cut segment in Fig. a,

$\overset{+}{\rightarrow} \Sigma F_x = 0; \qquad N - 80 = 0 \qquad N = 80 \text{ kN}$

$\circlearrowleft + \Sigma M_C = 0; \qquad M - 80(0.05) = 0 \qquad M = 4.00 \text{ kN} \cdot \text{m}$

$A = 0.01(0.2) = 0.002 \text{ m}^2 \qquad I = \frac{1}{12}(0.01)(0.2^3) = 6.667(10^{-6}) \text{ m}^4$

The normal stress developed is the combination of axial and bending stress. Thus,

$$\sigma = \frac{N}{A} \pm \frac{My}{I}$$

At point A, $y = 0.1$ m. Then

$$\sigma_A = \frac{80(10^3)}{0.002} - \frac{4.00(10^3)(0.1)}{6.667(10^{-6})}$$

$$= -20.0(10^6) \text{ Pa} = 20.0 \text{ MPa (C)}$$

At point B, $y = 0.1$ m. Then

$$\sigma_B = \frac{80(10^3)}{0.002} + \frac{4.00(10^3)(0.1)}{6.667(10^{-6})}$$

$$= 100\ (10^6) \text{ Pa} = 100 \text{ MPa (T)}$$

The location of the neutral axis can be determined using the similar triangles.

$$\frac{0.2 - d}{d} = \frac{20.0}{100}$$

$$20 - 100d = 20d$$

$$d = \frac{1}{2} \text{ m} = 166.667 \text{ mm}$$

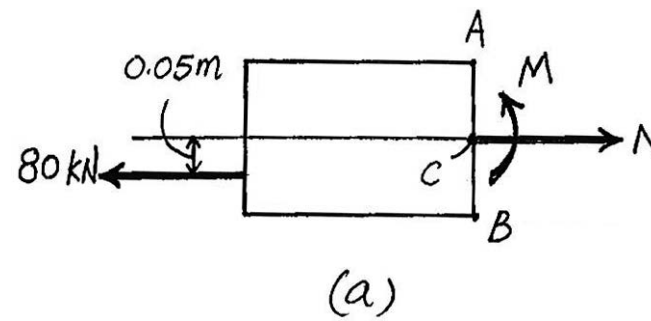

(a)

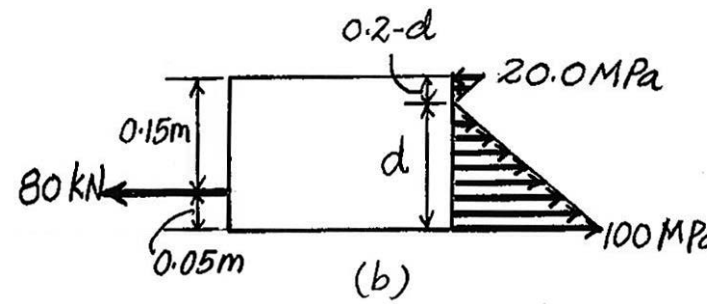

(b)

8–33. The control lever is subjected to a horizontal force of 20 lb on the handle. Determine the state of stress at points A and B. Sketch the results on differential elements located at each of these points. The assembly is pin connected at C and attached to a cable at D.

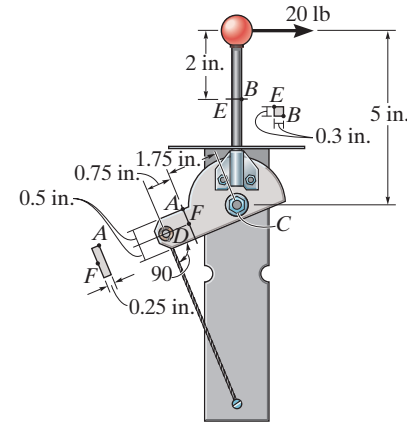

For point B:

$$I = \frac{1}{12}(0.3)(0.3^3) = 0.675(10^{-3})\ \text{in}^4$$

$$\sigma_B = \frac{Mc}{I} = \frac{40(0.15)}{0.675(10^{-3})} = 8.89\ \text{ksi (C)}$$ **Ans.**

$$\tau_B = 0 \qquad (\text{since } Q_B = 0)$$ **Ans.**

For point A:

$$I = \frac{1}{12}(0.25)(1^3) = 0.020833\ \text{in}^4$$

$$\sigma_A = \frac{Mc}{I} = \frac{30(0.5)}{0.020833} = 720\ \text{psi (T)}$$ **Ans.**

$$\tau_A = 0 \qquad (\text{since } Q_A = 0)$$ **Ans.**

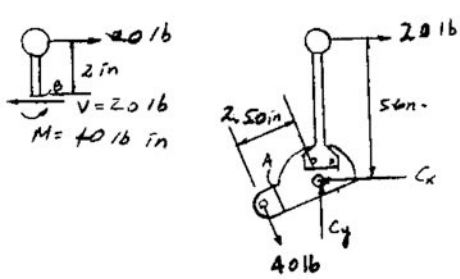

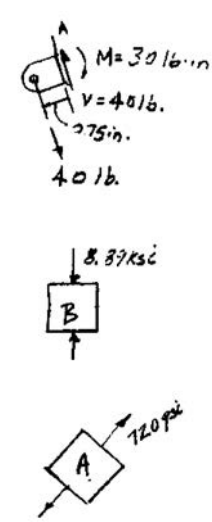

Ans:
$\sigma_B = 8.89$ ksi (C), $\tau_B = 0$,
$\sigma_A = 720$ psi (T), $\tau_A = 0$

8–34. The control lever is subjected to a horizontal force of 20 lb on the handle. Determine the state of stress at points E and F. Sketch the results on differential elements located at each of these points. The assembly is pin connected at C and attached to a cable at D.

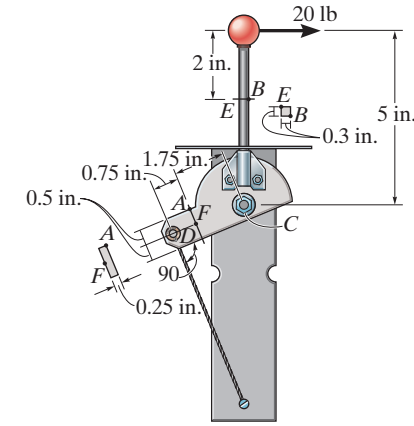

For point E:

$$I = \frac{1}{12}(0.3)(0.3^3) = 0.675(10^{-3})\ \text{in}^4$$

$$\sigma_E = \frac{Mc}{I} = \frac{40(0.15)}{0.675(10^{-3})} = 8.89\ \text{ksi (T)}$$ **Ans.**

$$\tau_E = 0 \qquad (\text{since } Q_E = 0)$$ **Ans.**

For point F:

$$I = \frac{1}{12}(0.25)(1^3) = 0.020833\ \text{in}^4$$

$$\sigma_F = 0$$ **Ans.**

$$\tau_F = \frac{VQ}{It} = \frac{40(0.25)(0.5)(0.25)}{\frac{1}{12}(0.25)(1)^3(0.25)} = 240\ \text{psi}$$ **Ans.**

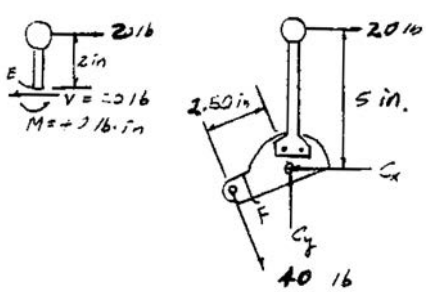

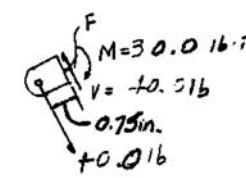

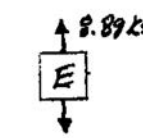

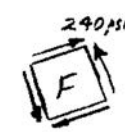

Ans:
$\sigma_E = 8.89$ ksi (T), $\tau_E = 0$, $\sigma_F = 0$, $\tau_F = 240$ psi

8–35. The tubular shaft of the soil auger is subjected to the axial force and torque shown. If the auger is rotating at a constant rate, determine the state of stress at points A and B on the cross section of the shaft at section a–a.

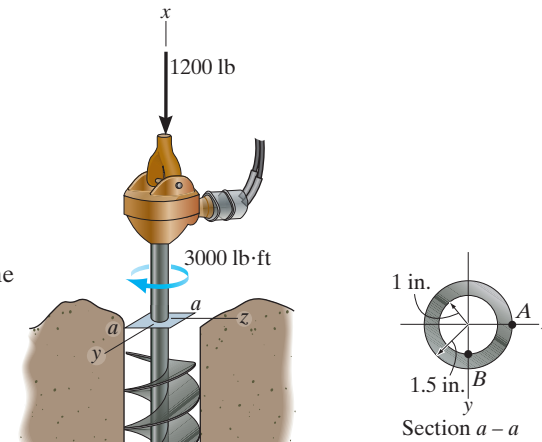

Internal Loadings: Consider the equilibrium of the free-body diagram of the upper cut segment shown in Fig. a.

$\Sigma F_x = 0; \quad N - 1200 = 0 \qquad\qquad N = 1200 \text{ lb}$

$\Sigma M_x = 0; \quad T - 3000 = 0 \qquad\qquad T = 3000 \text{ lb} \cdot \text{ft}$

Section Properties: The cross-sectional area and the polar moment of inertia of the shaft are

$$A = \pi(1.5^2 - 1^2) = 1.25\pi \text{ in}^2$$

$$J = \frac{\pi}{2}(1.5^4 - 1^4) = 2.03125\pi \text{ in}^4$$

Normal Stress: The normal stress is contributed by axial stress only. Thus,

$$\sigma_A = \sigma_B = \frac{N}{A} = \frac{-1200}{1.25x} = -305.58 \text{ psi} = 306 \text{ psi (C)} \qquad \textbf{Ans.}$$

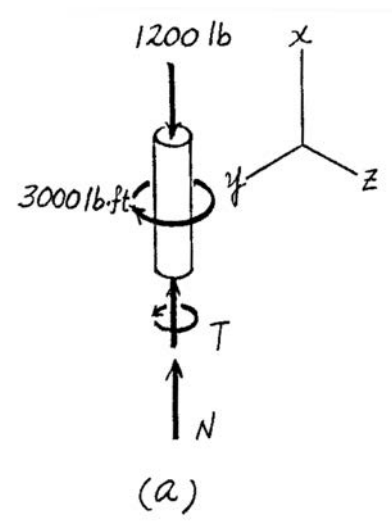

Shear Stress: The shear stress is contributed by torsional shear stress only. Thus,

$$\tau = \frac{T\rho}{J}$$

For point A, $\rho = 1.5$ in. and the shear stress is directed along the y axis. Thus,

$$(\tau_{xy})_A = \frac{3000(12)(1.5)}{2.03125\pi} = 8462 \text{ psi} = 8.46 \text{ ksi} \qquad \textbf{Ans.}$$

For point B, $\rho = 1$ in. and the shear stress is directed along the z axis. Thus,

$$(\tau_{xz})_B = \frac{3000(12)(1)}{2.03125\pi} = 5641 \text{ psi} = 5.64 \text{ ksi} \qquad \textbf{Ans.}$$

The state of stress at points A and B are represented on the elements shown in Figs. b and c, respectively.

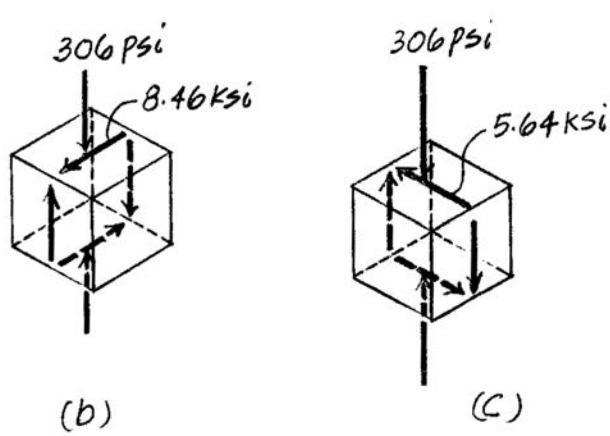

Ans:
$\sigma_A = \sigma_B = 306$ psi (C),
$\tau_A = 8.46$ ksi, $\tau_B = 5.64$ ksi

***8–36.** The drill is jammed in the wall and is subjected to the torque and force shown. Determine the state of stress at point A on the cross section of drill bit at section a–a.

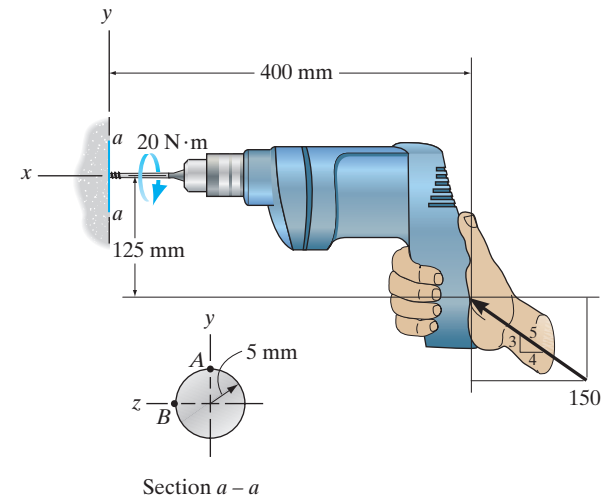

Internal Loadings: Consider the equilibrium of the free-body diagram of the drill's right cut segment, Fig. *a,*

$$\Sigma F_x = 0; \quad N - 150\left(\frac{4}{5}\right) = 0 \qquad\qquad N = 120\text{ N}$$

$$\Sigma F_y = 0; \quad 150\left(\frac{3}{5}\right) - V_y = 0 \qquad\qquad V_y = 90\text{ N}$$

$$\Sigma M_x = 0; \; 20 - T = 0 \qquad\qquad T = 20\text{ N}\cdot\text{m}$$

$$\Sigma M_z = 0; \; -150\left(\frac{3}{5}\right)(0.4) + 150\left(\frac{4}{5}\right)(0.125) + M_z = 0$$

$$M_z = 21\text{ N}\cdot\text{m}$$

Section Properties: The cross-sectional area, the moment of inertia about the z axis, and the polar moment of inertia of the drill's cross section are

$$A = \pi\left(0.005^2\right) = 25\pi\left(10^{-6}\right)\text{m}^2$$

$$I_z = \frac{\pi}{4}\left(0.005^4\right) = 0.15625\pi\left(10^{-9}\right)\text{m}^4$$

$$J = \frac{\pi}{2}\left(0.005^4\right) = 0.3125\pi\left(10^{-9}\right)\text{m}^4$$

Referring to Fig. *b,* Q_A is

$$Q_A = 0$$

Normal Stress: The normal stress is a combination of axial and bending stress. Thus,

$$\sigma = \frac{N}{A} - \frac{M_z y}{I_z}$$

For point A, $y = 0.005$ m. Then

$$\sigma_A = \frac{-120}{25\pi\left(10^{-6}\right)} - \frac{21(0.005)}{0.15625\pi\left(10^{-9}\right)} = -215.43\text{ MPa} = 215\text{ MPa (C)} \qquad \textbf{Ans.}$$

Shear Stress: The transverse shear stress developed at point A is

$$\left[\left(\tau_{xy}\right)_V\right]_A = \frac{V_y Q_A}{I_z t} = 0$$

The torsional shear stress developed at point A is

$$\left[\left(\tau_{xz}\right)_T\right]_A = \frac{Tc}{J} = \frac{20(0.005)}{0.3125\pi\left(10^{-9}\right)} = 101.86 \text{ MPa}$$

Thus,

$$\left(\tau_{xy}\right)_A = 0 \qquad \textbf{Ans.}$$

$$\left(\tau_{xz}\right)_A = \left[\left(\tau_{xz}\right)_T\right]_A = 102 \text{ MPa} \qquad \textbf{Ans.}$$

The state of stress at point A is represented on the element shown in Fig. c.

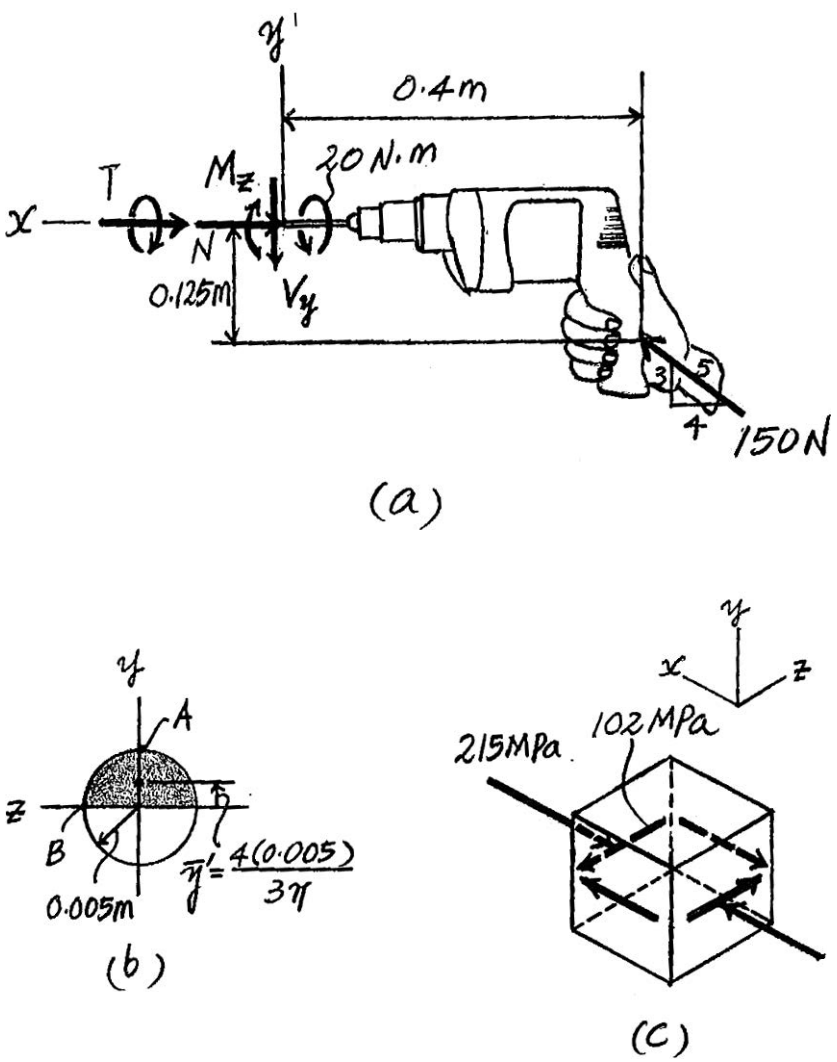

8–37. The drill is jammed in the wall and is subjected to the torque and force shown. Determine the state of stress at point B on the cross section of drill bit, in back, at section a–a.

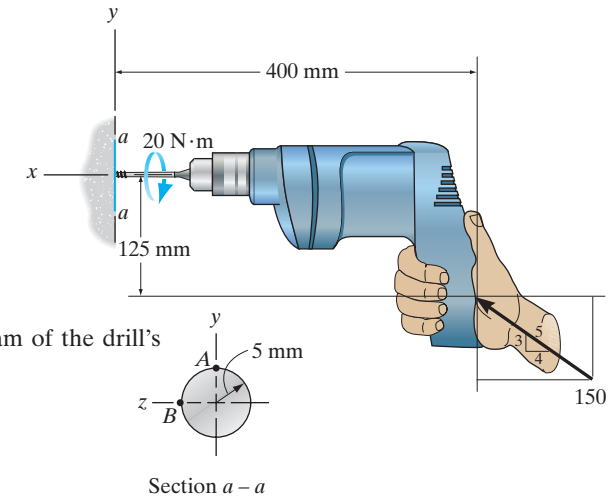

Internal Loadings: Consider the equilibrium of the free-body diagram of the drill's right cut segment, Fig. *a*,

$$\Sigma F_x = 0; \quad N - 150\left(\frac{4}{5}\right) = 0 \qquad N = 120 \text{ N}$$

$$\Sigma F_y = 0; \quad 150\left(\frac{3}{5}\right) - V_y = 0 \qquad V_y = 90 \text{ N}$$

$$\Sigma M_x = 0; \quad 20 - T = 0 \qquad T = 20 \text{ N}\cdot\text{m}$$

$$\Sigma M_z = 0; \quad -150\left(\frac{3}{5}\right)(0.4) + 150\left(\frac{4}{5}\right)(0.125) + M_z = 0$$

$$M_z = 21 \text{ N}\cdot\text{m}$$

Section Properties: The cross-sectional area, the moment of inertia about the z axis, and the polar moment of inertia of the drill's cross section are

$$A = \pi\left(0.005^2\right) = 25\pi\left(10^{-6}\right)\text{m}^2$$

$$I_z = \frac{\pi}{4}\left(0.005^4\right) = 0.15625\pi\left(10^{-9}\right)\text{m}^4$$

$$J = \frac{\pi}{2}\left(0.005^4\right) = 0.3125\pi\left(10^{-9}\right)\text{m}^4$$

Referring to Fig. *b*, Q_B is

$$Q_B = \bar{y}'A' = \frac{4(0.005)}{3\pi}\left[\frac{\pi}{2}\left(0.005^2\right)\right] = 83.333\left(10^{-9}\right)\text{m}^3$$

Normal Stress: The normal stress is a combination of axial and bending stress. Thus,

$$\sigma = \frac{N}{A} - \frac{M_z y}{I_z}$$

For point B, $y = 0$. Then

$$\sigma_B = \frac{-120}{25\pi\left(10^{-6}\right)} - 0 = -1.528 \text{ MPa} = 1.53 \text{ MPa (C)} \qquad \textbf{Ans.}$$

8–37. Continued

Shear Stress: The transverse shear stress developed at point B is

$$\left[\left(\tau_{xy}\right)_V\right]_B = \frac{V_y Q_B}{I_z t} = \frac{90\left[83.333\left(10^{-9}\right)\right]}{0.15625\pi\left(10^{-9}\right)(0.01)} = 1.528 \text{ MPa}$$

The torsional shear stress developed at point B is

$$\left[\left(\tau_{xy}\right)_T\right]_B = \frac{Tc}{J} = \frac{20(0.005)}{0.3125\pi\left(10^{-9}\right)} = 101.86 \text{ MPa}$$

Thus,

$$\left(\tau_{xy}\right)_B = 0 \qquad \textbf{Ans.}$$

$$\left(\tau_{xy}\right)_B = \left[\left(\tau_{xy}\right)_T\right]_B - \left[\left(\tau_{xy}\right)_V\right]_B$$

$$= 101.86 - 1.528 = 100.33 \text{ MPa} = 100 \text{ MPa} \qquad \textbf{Ans.}$$

The state of stress at point B is represented on the element shown in Fig. d.

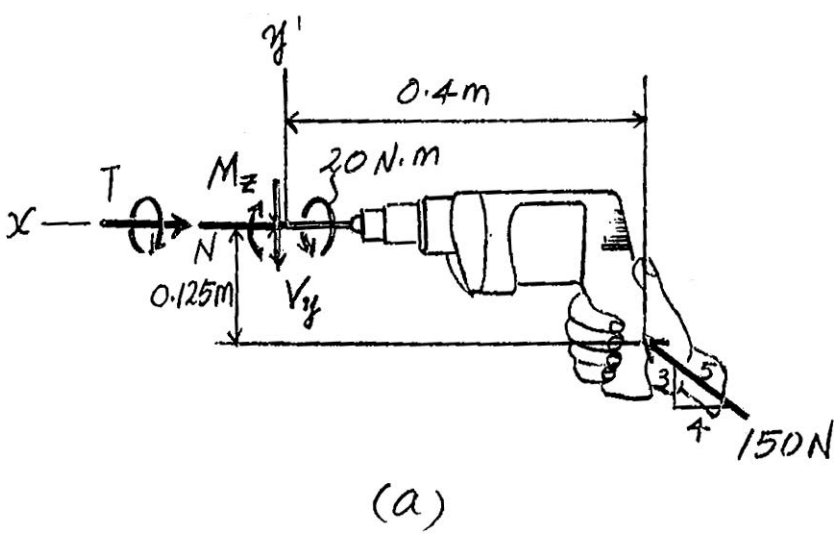

(a)

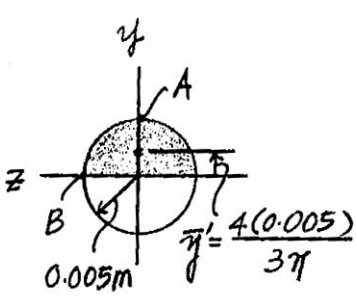

(b)

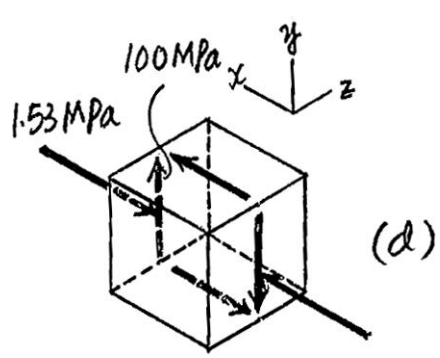

(d)

Ans:
$\sigma_B = 1.53$ MPa (C), $\tau_B = 100$ MPa

8–38. The frame supports the distributed load shown. Determine the state of stress acting at point D. Show the results on a differential element at this point.

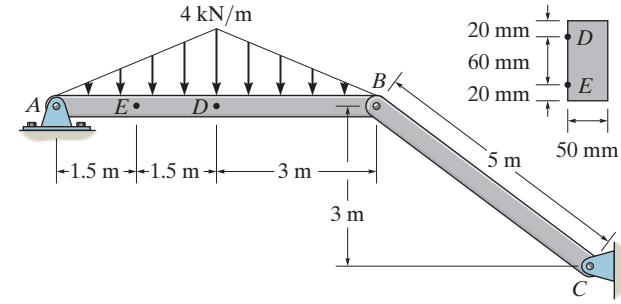

$$\sigma_D = -\frac{P}{A} - \frac{My}{I} = -\frac{8(10^3)}{(0.1)(0.05)} - \frac{12(10^3)(0.03)}{\frac{1}{12}(0.05)(0.1)^3}$$

$\sigma_D = -88.0$ MPa **Ans.**

$\tau_D = 0$ **Ans.**

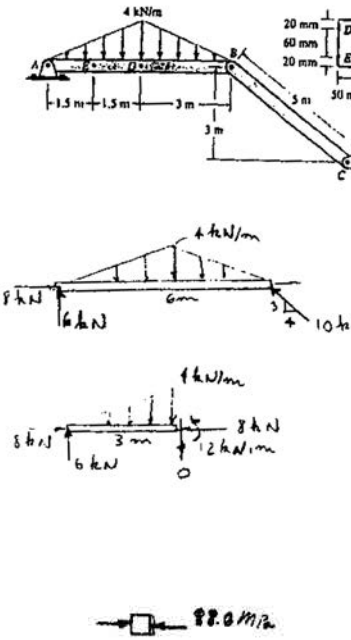

Ans:
$\sigma_D = -88.0$ MPa, $\tau_D = 0$

8–39. The frame supports the distributed load shown. Determine the state of stress acting at point E. Show the results on a differential element at this point.

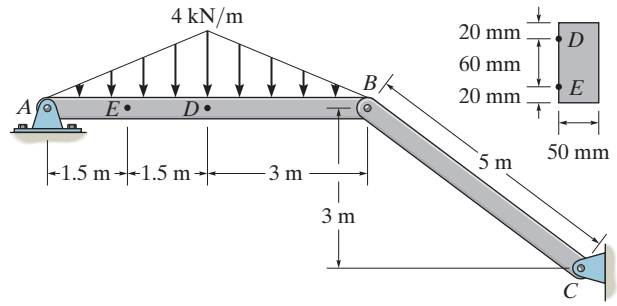

$$\sigma_E = -\frac{P}{A} - \frac{My}{I} = \frac{8(10^3)}{(0.1)(0.05)} + \frac{8.25(10^3)(0.03)}{\frac{1}{12}(0.05)(0.1)^3} = 57.8 \text{ MPa}$$ **Ans.**

$$\tau_E = \frac{VQ}{It} = \frac{4.5(10^3)(0.04)(0.02)(0.05)}{\frac{1}{12}(0.05)(0.1)^3(0.05)} = 864 \text{ kPa}$$ **Ans.**

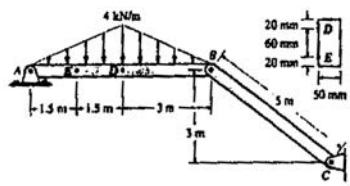

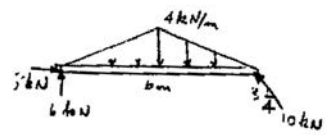

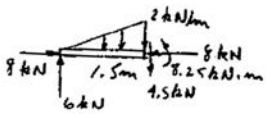

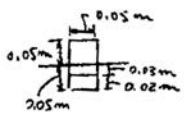

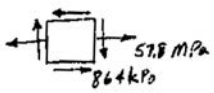

Ans:
$\sigma_E = 57.8$ MPa, $\tau_E = 864$ kPa

***8–40.** The 500-kg engine is suspended from the jib crane at the position shown. Determine the state of stress at point A on the cross section of the boom at section a–a.

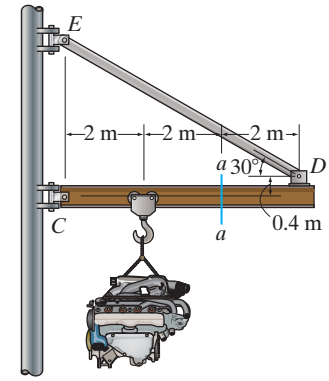

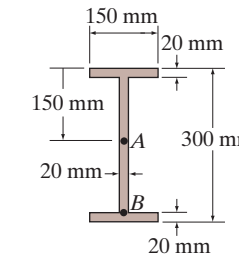

Section $a - a$

Support Reactions: Referring to the free-body diagram of the entire boom, Fig. a,

$$\circlearrowleft + \Sigma M_C = 0; \qquad F_{DE} \sin 30°(6) + F_{DE} \cos 30°(0.4) - 500(9.81)(2) = 0$$

$$F_{DE} = 2931.50 \text{ N}$$

Internal Loadings: Considering the equilibrium of the free-body diagram of the boom's right cut segment, Fig. b,

$$\overset{+}{\rightarrow} \Sigma F_x = 0; \qquad N - 2931.50 \cos 30° = 0 \qquad N = 2538.75 \text{ N}$$

$$+\uparrow \Sigma F_y = 0; \qquad 2931.50 \sin 30° - V = 0 \qquad V = 1465.75 \text{ N}$$

$$\circlearrowleft + \Sigma M_O = 0; \qquad 2931.50 \sin 30°(2) + 2931.50 \cos 30°(0.4) - M = 0$$

$$M = 3947.00 \text{ N} \cdot \text{m}$$

Section Properties: The cross-sectional area and the moment of inertia about the centroidal axis of the boom's cross section are

$$A = 0.15(0.3) - 0.13(0.26) = 0.0112 \text{ m}^2$$

$$I = \frac{1}{12}(0.15)(0.3^3) - \frac{1}{12}(0.13)(0.26^3) = 0.14709(10^{-3}) \text{ m}^4$$

Referring to Fig. c, Q_A is

$$Q_A = \bar{y}_1' A_1' + \bar{y}_1' A_2' = 0.065(0.13)(0.2) + 0.14(0.02)(0.15) = 0.589(10^{-3}) \text{ m}^3$$

Normal Stress: The normal stress is the combination of axial and bending stress. Thus,

$$\sigma = \frac{N}{A} + \frac{My}{I}$$

For point A. $y = 0$. Then

$$\sigma_A = \frac{-2538.75}{0.0112} + 0 = -0.2267 \text{ MPa} = 0.227 \text{ MPa (C)} \qquad \textbf{Ans.}$$

Shear Stress: The shear stress is contributed by transverse shear stress only. Thus,

$$\tau_A = \frac{VQ_A}{It} = \frac{1465.75[0.589(10^{-3})]}{0.14709(10^{-3})(0.02)} = 0.293 \text{ MPa} \qquad \textbf{Ans.}$$

The state of stress at point A is represented on the element shown in Fig. d.

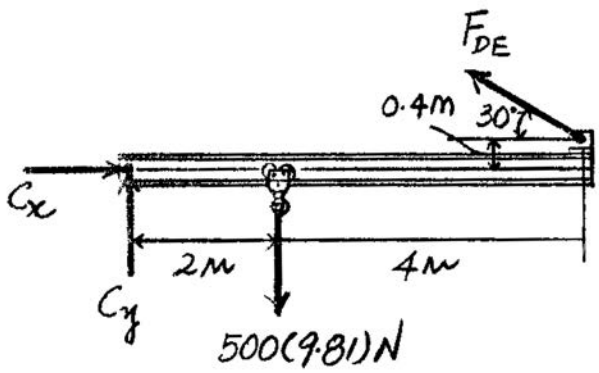
F_{DE}
0.4m
30°
C_x
2m
4m
C_y
500(9.81)N

(a)

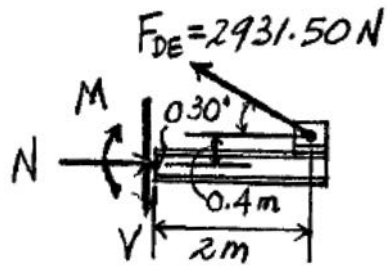
F_{DE}=2931.50N
M
30°
N
0.4m
V
2m

(b)

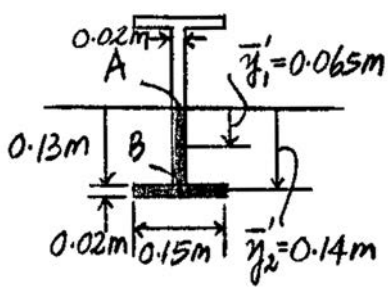
0.02m
A
$\bar{y}_1'$=0.065m
0.13m
B
0.02m
0.15m
$\bar{y}_2'$=0.14m

(c)

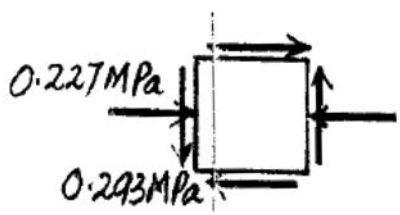
0.227MPa
0.293MPa

(d)

8–41. The 500-kg engine is suspended from the jib crane at the position shown. Determine the state of stress at point B on the cross section of the boom at section a–a. Point B is just above the bottom flange.

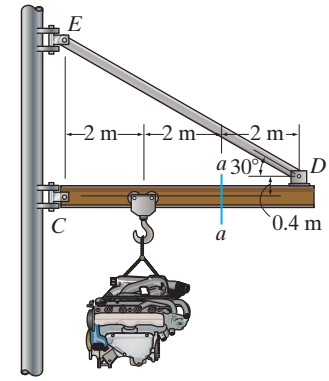

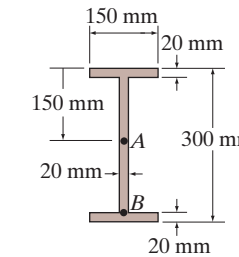

Section $a - a$

Support Reactions: Referring to the free-body diagram of the entire boom, Fig. a,

$$\circlearrowleft + \Sigma M_C = 0; \qquad F_{DE} \sin 30°(6) + F_{DE} \cos 30°(0.4) - 500(9.81)(2) = 0$$

$$F_{DE} = 2931.50 \text{ N}$$

Internal Loadings: Considering the equilibrium of the free-body diagram of the boom's right cut segment, Fig. b,

$$\overset{+}{\rightarrow} \Sigma F_x = 0; \qquad N - 2931.50 \cos 30° = 0 \qquad N = 2538.75 \text{ N}$$

$$+\uparrow \Sigma F_y = 0; \qquad 2931.50 \sin 30° - V = 0 \qquad V = 1465.75 \text{ N}$$

$$\circlearrowleft + \Sigma M_O = 0; \qquad 2931.50 \sin 30°(2) + 2931.50 \cos 30°(0.4) - M = 0$$

$$M = 3947.00 \text{ N} \cdot \text{m}$$

Section Properties: The cross-sectional area and the moment of inertia about the centroidal axis of the boom's cross section are

$$A = 0.15(0.3) - 0.13(0.26) = 0.0112 \text{ m}^2$$

$$I = \frac{1}{12}(0.15)(0.3^3) - \frac{1}{12}(0.13)(0.26^3) = 0.14709(10^{-3}) \text{ m}^4$$

Referring to Fig. c, Q_B is

$$Q_B = \bar{y}_2 A_2' = 0.14(0.02)(0.15) = 0.42(10^{-3}) \text{ m}^3$$

Normal Stress: The normal stress is the combination of axial and bending stress. Thus,

$$\sigma = \frac{N}{A} + \frac{My}{I}$$

For point B, $y = 0.13$ m. Then

$$\sigma_B = \frac{-2538.75}{0.0112} + \frac{3947.00(0.13)}{0.14709(10^{-3})} = 3.26 \text{ MPa (T)} \qquad \textbf{Ans.}$$

Shear Stress: The shear stress is contributed by transverse shear stress only. Thus,

$$\tau_B = \frac{VQ_B}{It} = \frac{1465.75[0.42(10^{-3})]}{0.14709(10^{-3})(0.02)} = 0.209 \text{ MPa} \qquad \textbf{Ans.}$$

The state of stress at point B is represented on the element shown in Fig. *d*.

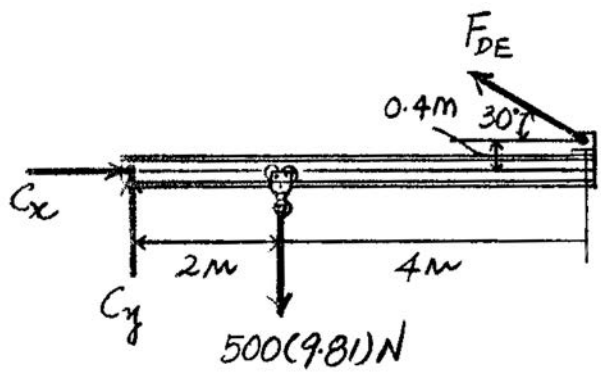

(a)

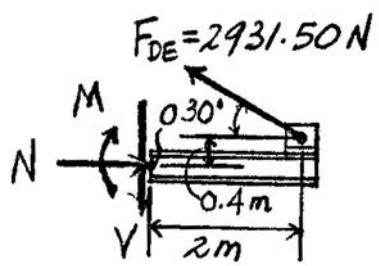

(b)

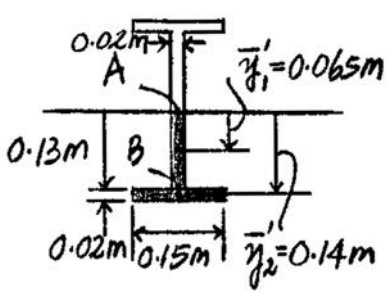

(c)

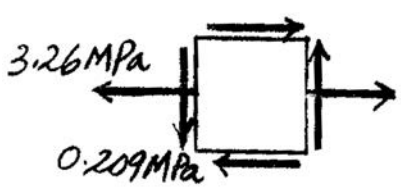

(d)

Ans:
$\sigma_B = 3.26$ MPa (T), $\tau_B = 0.209$ MPa

8–42. Determine the state of stress at point A on the cross section of the post at section a–a. Indicate the results on a differential element at the point.

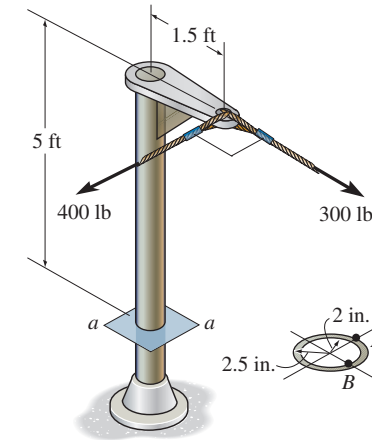

Internal Loadings: Considering the equilibrium of the free-body diagram of the post's upper cut segment, Fig. *a*,

$\Sigma F_y = 0; \quad V_y + 300 = 0 \qquad V_y = -300 \text{ lb}$

$\Sigma F_z = 0; \quad V_z + 400 = 0 \qquad V_z = -400 \text{ lb}$

$\Sigma M_x = 0; \quad T + 400(1.5) = 0 \qquad T = -600 \text{ lb} \cdot \text{ft}$

$\Sigma M_y = 0; \quad M_y + 400(5) = 0 \qquad M_y = -2000 \text{ lb} \cdot \text{ft}$

$\Sigma M_z = 0; \quad M_z - 300(5) = 0 \qquad M_z = 1500 \text{ lb} \cdot \text{ft}$

Section Properties: The moments of inertia about the y and z axes and the polar moment of inertia of the post's cross section are

$$I_y = I_z = \frac{\pi}{4}(2.5^4 - 2^4) = 5.765625\pi \text{ in}^4$$

$$J = \frac{\pi}{2}(2.5^4 - 2^4) = 11.53125\pi \text{ in}^4$$

Referring to Fig. *b*,

$$(Q_z)_A = 0$$

$$(Q_y)_A = \frac{4(2.5)}{3\pi}\left[\frac{\pi}{2}(2.5^2)\right] - \frac{4(2)}{3\pi}\left[\frac{\pi}{2}(2^2)\right] = 5.0833 \text{ in}^3$$

Normal Stress: The normal stress is contributed by bending stress only. Thus,

$$\sigma = -\frac{M_z y}{I_z} + \frac{M_y z}{I_y}$$

For point A, $y = 0$ and $z = -2.5$ in. Then

$$\sigma_A = -0 + \frac{-2000(12)(-2.5)}{5.765625\pi} = 3.31 \text{ ksi (T)} \qquad \textbf{Ans.}$$

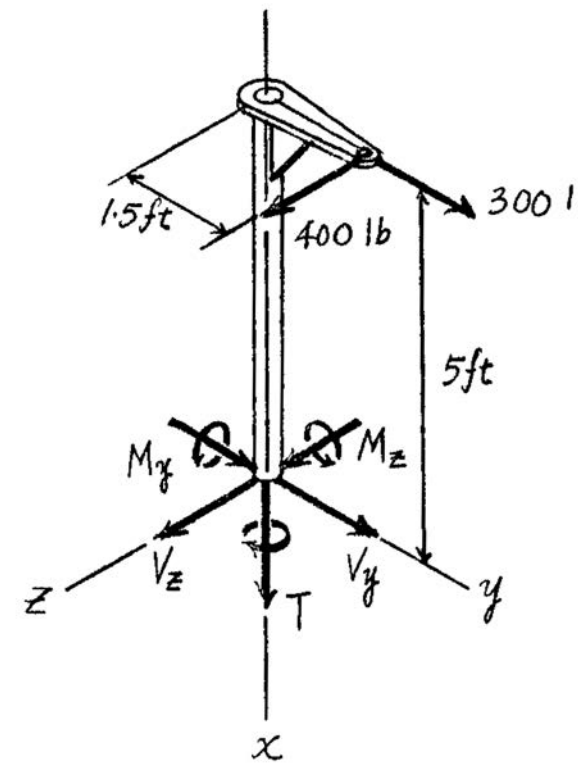

(a)

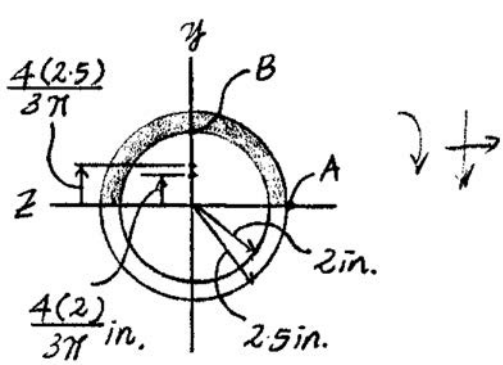

(b)

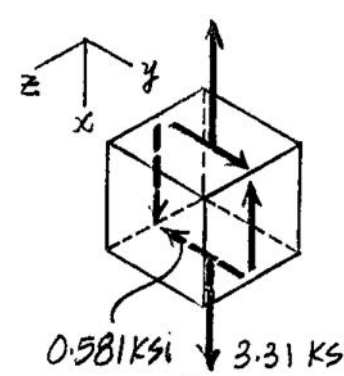

(c)

Shear Stress: The torsional shear stress at points A and B are

$$[(\tau_{xy})_T]_A = \frac{Tc}{J} = \frac{600(12)(2.5)}{11.53125\pi} = 0.4969 \text{ ksi}$$

The transverse shear stresses at points A and B are

$$[(\tau_{xz})_V]_A = \frac{V_z(Q_z)_A}{I_y t} = 0$$

$$[(\tau_{xy})_V]_A = \frac{V_y(Q_y)_B}{I_z t} = \frac{300(5.0833)}{5.765625\pi(5 - 4)} = 0.08419 \text{ ksi}$$

Combining these two shear stress components,

$$(\tau_{xy})_A = [(\tau_{xy})_T]_A + [(\tau_{xy})_V]_A = 0.4969 + 0.08419 = 0.581 \text{ ksi} \qquad \textbf{Ans.}$$

$$(\tau_{xz})_A = 0 \qquad \textbf{Ans.}$$

The state of stress at point A is represented on the element shown in Fig. c.

Ans:
$\sigma_A = 3.31$ ksi (T), $\tau_A = 0.581$ ksi

8–43. Determine the state of stress at point B on the cross section of the post at section a–a. Indicate the results on a differential element at the point.

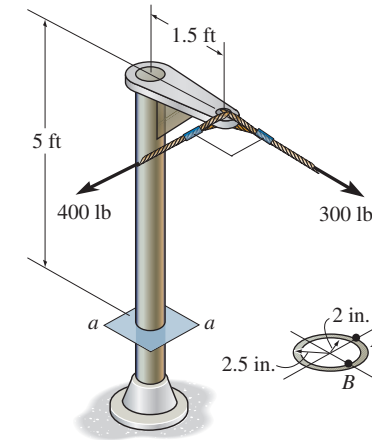

Internal Loadings: Considering the equilibrium of the free-body diagram of the post's upper segment, Fig. *a*,

$\Sigma F_y = 0; \quad V_y + 300 = 0 \qquad V_y = -300 \text{ lb}$

$\Sigma F_z = 0; \quad V_z + 400 = 0 \qquad V_z = -400 \text{ lb}$

$\Sigma M_x = 0; \quad T + 400(1.5) = 0 \qquad T = -600 \text{ lb} \cdot \text{ft}$

$\Sigma M_y = 0; \quad M_y + 400(5) = 0 \qquad M_y = -2000 \text{ lb} \cdot \text{ft}$

$\Sigma M_z = 0; \quad M_z - 300(5) = 0 \qquad M_z = 1500 \text{ lb} \cdot \text{ft}$

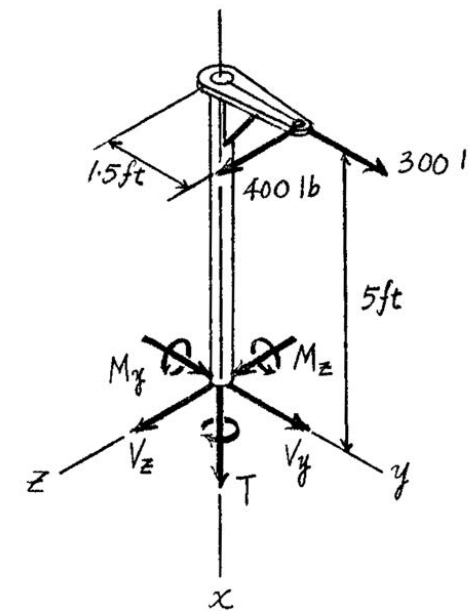

(a)

Section Properties: The moments of inertia about the y and z axes and the polar moment of inertia of the post's cross section are

$$I_y = I_z = \frac{\pi}{4}(2.5^4 - 2^4) = 5.765625\pi \text{ in}^4$$

$$J = \frac{\pi}{2}(2.5^4 - 2^4) = 11.53125\pi \text{ in}^4$$

Referring to Fig. *b*,

$$(Q_y)_B = 0$$

$$(Q_z)_B = \frac{4(2.5)}{3\pi}\left[\frac{\pi}{2}(2.5^2)\right] - \frac{4(2)}{3\pi}\left[\frac{\pi}{2}(2^2)\right] = 5.0833 \text{ in}^3$$

Normal Stress: The normal stress is contributed by bending stress only. Thus,

$$\sigma = -\frac{M_z y}{I_z} + \frac{M_y z}{I_y}$$

For point B, $y = 2$ in. and $z = 0$. Then

$$\sigma_B = \frac{1500(12)(2)}{5.765625\pi} + 0 = -1.987 \text{ ksi} = 1.99 \text{ ksi (C)} \qquad \textbf{Ans.}$$

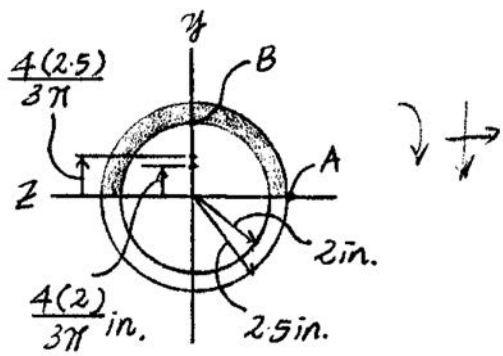

(b)

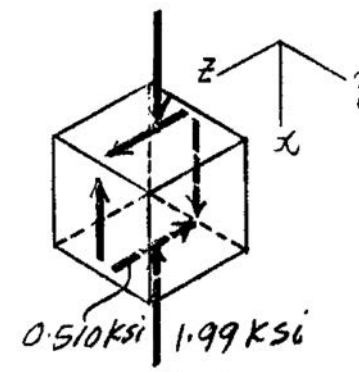

(c)

Shear Stress: The torsional shear stress at point B is

$$[(\tau_{xz})_T]_B = \frac{Tc}{J} = \frac{600(12)(2)}{11.53125\pi} = 0.3975 \text{ ksi}$$

The transverse shear stress at point B is

$$[(\tau_{xy})_V]_B = \frac{V_y(Q_y)_A}{I_z t} = 0$$

$$[(\tau_{xz})_V]_B = \frac{V_z(Q_z)_B}{I_y t} = \frac{400(5.0833)}{5.765625\pi(5 - 4)} = 0.1123 \text{ ksi}$$

Combining these two shear stress components,

$$(\tau_{xz})_B = [(\tau_{xz})_T]_B + [(\tau_{xz})_V]_B = 0.3975 + 0.1123 = 0.510 \text{ ksi}$$ **Ans.**

$$(\tau_{xy})_B = 0$$ **Ans.**

The state of stress at point B is represented on the element shown in Fig. c.

Ans:
$\sigma_B = 1.99$ ksi (C), $\tau_B = 0.510$ ksi

***8–44.** Determine the normal stress developed at points A and B. Neglect the weight of the block.

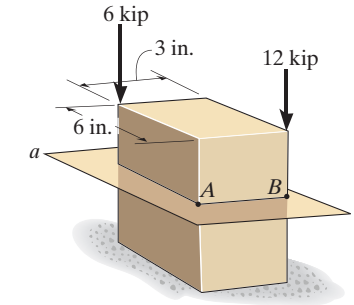

Referring to Fig. a,

$$\Sigma F_x = (F_R)_x; \qquad -6 - 12 = F \qquad F = -18.0 \text{ kip}$$

$$\Sigma M_y = (M_R)_y; \qquad 6(1.5) - 12(1.5) = M_y \qquad M_y = -9.00 \text{ kip} \cdot \text{in}$$

$$\Sigma M_z = (M_R)_z; \qquad 12(3) - 6(3) = M_z \qquad M_z = 18.0 \text{ kip} \cdot \text{in}$$

The cross-sectional area and moments of inertia about the y and z axes of the cross section are

$$A = 6(3) = 18 \text{ in}^2$$

$$I_y = \frac{1}{12}(6)(3)^3 = 13.5 \text{ in}^4$$

$$I_z = \frac{1}{12}(3)(6^3) = 54.0 \text{ in}^4$$

The normal stress developed is the combination of axial and bending stress. Thus,

$$\sigma = \frac{F}{A} - \frac{M_z\, y}{I_z} + \frac{M_y\, z}{I_y}$$

For point A, $y = 3$ in. and $z = -1.5$ in.

$$\sigma_A = \frac{-18.0}{18.0} - \frac{18.0(3)}{54.0} + \frac{-9.00(-1.5)}{13.5}$$

$$= -1.00 \text{ ksi} = 1.00 \text{ ksi (C)} \qquad \textbf{Ans.}$$

For point B, $y = 3$ in and $z = 1.5$ in.

$$\sigma_B = \frac{-18.0}{18.0} - \frac{18.0(3)}{54} + \frac{-9.00(1.5)}{13.5}$$

$$= -3.00 \text{ ksi} = 3.00 \text{ ksi (C)} \qquad \textbf{Ans.}$$

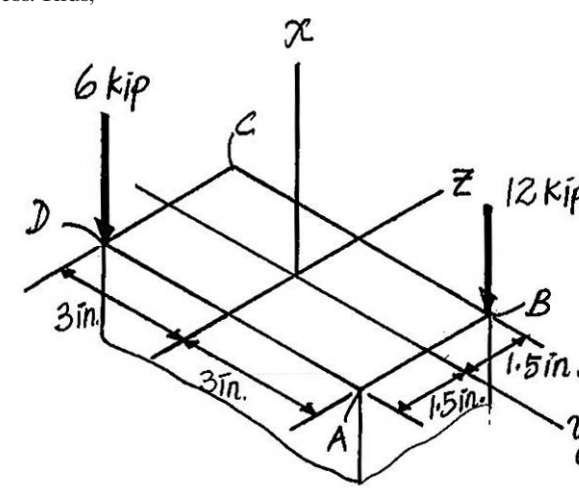

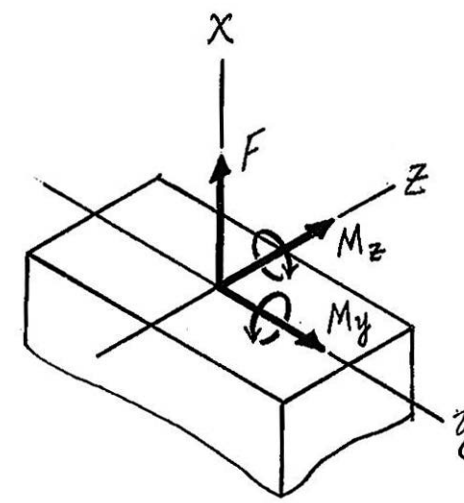

(a)

8–45. Sketch the normal stress distribution acting over the cross section at section *a–a*. Neglect the weight of the block.

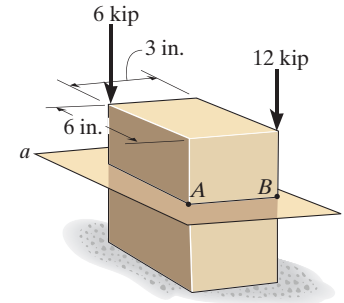

Referring to Fig. *a*,

$\Sigma F_x = (F_R)_x; \quad -6 - 12 = F \qquad F = -18.0 \text{ kip}$

$\Sigma M_y = (M_R)_y; \quad 6(1.5) - 12(1.5) = M_y \qquad M_y = -9.00 \text{ kip} \cdot \text{in}$

$\Sigma M_z = (M_R)_z; \quad 12(3) - 6(3) = M_z \qquad M_z = 18.0 \text{ kip} \cdot \text{in}$

The cross-sectional area and the moment of inertia about the y and z axes of the cross section are

$$A = 3\,(6) = 18.0 \text{ in}^2$$

$$I_y = \frac{1}{12}(6)(3^3) = 13.5 \text{ in}^4$$

$$I_z = \frac{1}{12}(3)(6^3) = 54.0 \text{ in}^4$$

The normal stress developed is the combination of axial and bending stress. Thus,

$$\sigma = \frac{F}{A} - \frac{M_z y}{I_z} + \frac{M_y z}{I_y}$$

For point A, $y = 3$ in. and $z = -1.5$ in.

$$\sigma_A = \frac{-18.0}{18.0} - \frac{18.0(3)}{54.0} + \frac{-9.00(-1.5)}{13.5}$$

$$= -1.00 \text{ ksi} = 1.00 \text{ ksi (C)} \qquad \textbf{Ans.}$$

For point B, $y = 3$ in. and $z = 1.5$ in.

$$\sigma_B = \frac{-18.0}{18.0} - \frac{18.0(3)}{54.0} + \frac{-9.00(1.5)}{13.5}$$

$$= -3.00 \text{ ksi} = 3.00 \text{ ksi (C)} \qquad \textbf{Ans.}$$

8–45. Continued

For point C, $y = -3$ in. and $z = 1.5$ in.

$$\sigma_C = \frac{-18.0}{18.0} - \frac{18.0(-3)}{54.0} + \frac{-9.00(1.5)}{13.5}$$

$$= -1.00 \text{ ksi} = 1.00 \text{ ksi (C)}$$ **Ans.**

For point D, $y = -3$ in. and $z = -1.5$ in.

$$\sigma_D = \frac{-18.0}{18.0} - \frac{18.0(-3)}{54.0} + \frac{-9.00(-1.5)}{13.5}$$

$$= 1.00 \text{ ksi (T)}$$ **Ans.**

The normal stress distribution over the cross section is shown in Fig. *b*

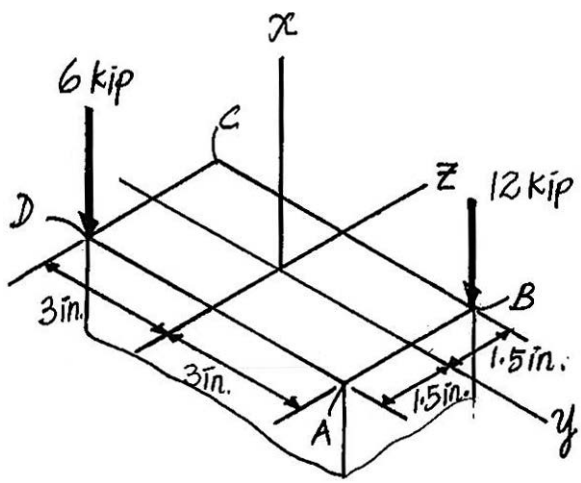

(a)

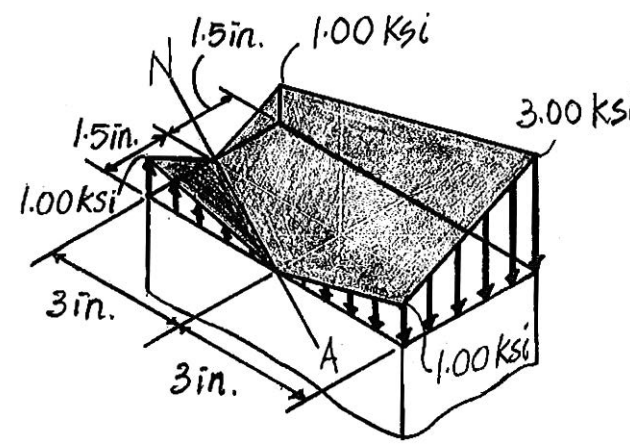

(b)

Ans:
$\sigma_A = 1.00$ ksi (C), $\sigma_B = 3.00$ ksi (C)

8–46. The support is subjected to the compressive load **P**. Determine the absolute maximum possible and minimum possible normal stress acting in the material, for $x \geq 0$.

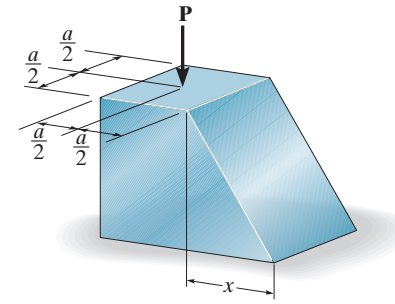

Section Properties:

$w = a + x$

$A = a(a + x)$

$I = \frac{1}{12}(a)(a + x)^3 = \frac{a}{12}(a + x)^3$

Internal Forces and Moment: As shown on FBD.

Normal Stress:

$$\sigma = \frac{N}{A} \pm \frac{Mc}{I}$$

$$= \frac{-P}{a(a + x)} \pm \frac{0.5Px\left[\frac{1}{2}(a + x)\right]}{\frac{a}{12}(a + x)^3}$$

$$= \frac{P}{a}\left[\frac{-1}{a + x} \pm \frac{3x}{(a + x)^2}\right]$$

$$\sigma_A = -\frac{P}{a}\left[\frac{1}{a + x} + \frac{3x}{(a + x)^2}\right]$$

$$= -\frac{P}{a}\left[\frac{4x + a}{(a + x)^2}\right] \qquad (1)$$

$$\sigma_B = \frac{P}{a}\left[\frac{-1}{a + x} + \frac{3x}{(a + x)^2}\right]$$

$$= \frac{P}{a}\left[\frac{2x - a}{(a + x)^2}\right] \qquad (2)$$

In order to have maximum normal stress, $\frac{d\sigma_A}{dx} = 0$.

$$\frac{d\sigma_A}{dx} = -\frac{P}{a}\left[\frac{(a + x)^2(4) - (4x + a)(2)(a + x)(1)}{(a + x)^4}\right] = 0$$

$$-\frac{P}{a(a + x)^3}(2a - 4x) = 0$$

Since $\frac{P}{a(a + x)^3} \neq 0$, then

$$2a - 4x = 0 \qquad x = 0.500a$$

8–46. Continued

Substituting the result into Eq. (1) yields

$$\sigma_{\max} = -\frac{P}{a}\left[\frac{4(0.500a)+a}{(a+0.5a)^2}\right]$$

$$= -\frac{1.33P}{a^2} = \frac{1.33P}{a^2}\ (\mathrm{C}) \qquad \textbf{Ans.}$$

In order to have minimum normal stress, $\dfrac{d\sigma_B}{dx} = 0$.

$$\frac{d\sigma_B}{dx} = \frac{P}{a}\left[\frac{(a+x)^2(2)-(2x-a)(2)(a+x)(1)}{(a+x)^4}\right] = 0$$

$$\frac{P}{a(a+x)^3}(4a-2x) = 0$$

Since $\dfrac{P}{a(a+x)^3} \neq 0$, then

$$4a - 2x = 0 \qquad x = 2a$$

Substituting the result into Eq. (2) yields

$$\sigma_{\min} = \frac{P}{a}\left[\frac{2(2a)-a}{(a+2a)^2}\right] = \frac{P}{3a^2}\ (\mathbf{T}) \qquad \textbf{Ans.}$$

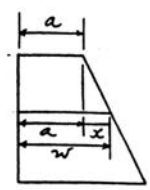

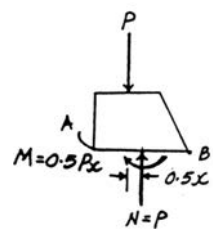

Ans:
$\sigma_{\max} = \dfrac{1.33P}{a^2}$ (C), $\sigma_{\min} = \dfrac{P}{3a^2}$ (T)

8–47. The bent shaft is fixed in the wall at A. If a force $\mathbf{F}$ is applied at B, determine the stress components at points D and E. Show the results on a differential element located at each of these points. Take $F = 12$ lb and $\theta = 0°$.

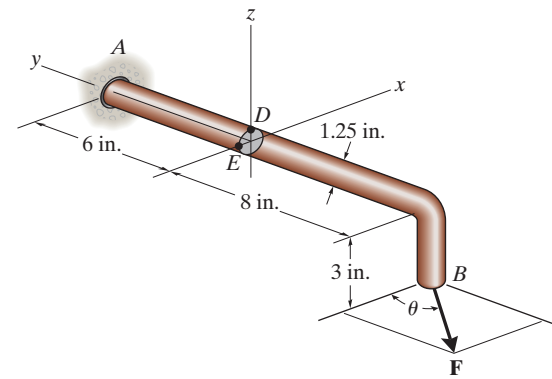

$\Sigma F_x = 0;\qquad V_x - 12 = 0;\qquad V_x = 12$ lb

$\Sigma M_y = 0;\qquad -T_y + 12(3) = 0;\qquad T_y = 36$ lb · in.

$\Sigma M_z = 0;\qquad M_z - 12(8) = 0;\qquad M_z = 96$ lb · in.

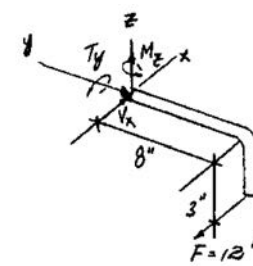

$A = \pi(0.625^2) = 1.2272 \text{ in}^2$

$I = \frac{1}{4}\pi(0.625^4) = 0.1198 \text{ in}^4$

$J = \frac{1}{2}\pi\,(0.625^4) = 0.2397 \text{ in}^4$

Point D:

$$(Q_D)_z = \frac{4(0.625)}{3\pi}\frac{1}{2}(\pi)(0.625^2) = 0.1628 \text{ in}^3$$

$$\sigma_D = \frac{M_z x}{I} = 0 \qquad \textbf{Ans.}$$

$$(\tau_D)_{yx} = (\tau_D)_V - (\tau_D)_{\text{twist}}$$

$$= \frac{V_x (Q_D)_z}{I\,t} - \frac{T_y c}{J}$$

$$= \frac{12(0.1628)}{0.1198(1.25)} - \frac{36(0.625)}{0.2397} = -80.8 \text{ psi} \qquad \textbf{Ans.}$$

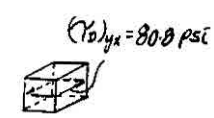

Point E:

$$(\sigma_E)_y = \frac{M_z x}{I} = \frac{-96(0.625)}{0.1198} = -501 \text{ psi} \qquad \textbf{Ans.}$$

$$(\tau_E)_{yz} = (\tau_E)_V - (\tau_E)_{\text{twist}}$$

$$= 0 - \frac{T_y c}{J} = \frac{-36(0.625)}{0.2397}$$

$$= -93.9 \text{ psi} \qquad \textbf{Ans.}$$

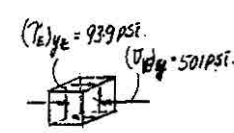

Ans:
$\sigma_D = 0$, $\tau_D = 80.8$ psi,
$\sigma_E = -501$ psi, $\tau_E = 93.9$ psi

***8–48.** The bent shaft is fixed in the wall at A. If a force **F** is applied at B, determine the stress components at points D and E. Show the results on a differential element located at each of these points. Take $F = 12$ lb and $\theta = 90°$.

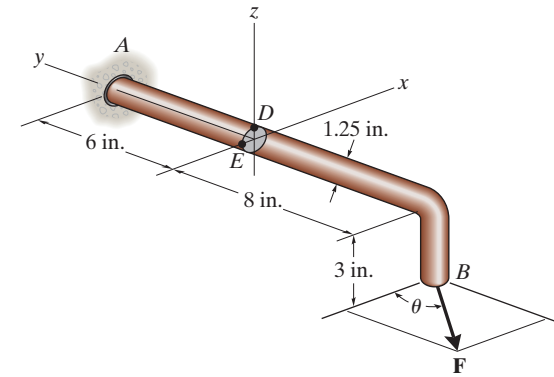

$\Sigma F_y = 0;\qquad N_y - 12 = 0;\qquad N_y = 12 \text{ lb}$

$\Sigma M_x = 0;\qquad M_x - 12(3) = 0;\qquad M_x = 36 \text{ lb}\cdot\text{in.}$

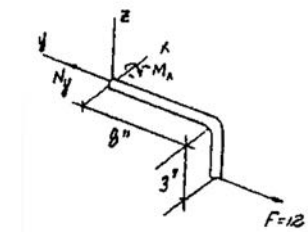

$A = \pi(0.625^2) = 1.2272 \text{ in}^2$

$I = \dfrac{1}{4}\pi(0.625^4) = 0.1198 \text{ in}^4$

Point D:

$$(\sigma_D)_y = \frac{N_y}{A} - \frac{M_x z}{I} = \frac{12}{1.2272} - \frac{36(0.625)}{0.1198}$$

$$= -178 \text{ psi}$$ **Ans.**

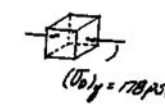

$(\tau_D)_{yz} = (\tau_D)_{yz} = 0$ **Ans.**

Point E:

$$(\sigma_E)_y = \frac{N_y}{A} + \frac{M_x z}{I} = \frac{12}{1.2272}$$

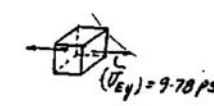

$$= 9.78 \text{ psi}$$ **Ans.**

$(\tau_E)_{yx} = (\tau_E)_{yz} = 0$ **Ans.**

8–49. The bent shaft is fixed in the wall at A. If a force $\mathbf{F}$ is applied at B, determine the stress components at points D and E. Show the results on a volume element located at each of these points. Take $F = 12$ lb and $\theta = 45°$.

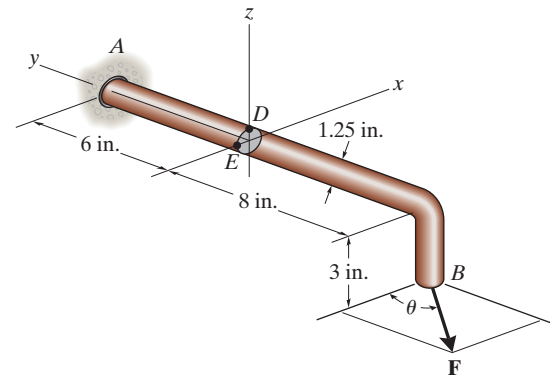

$\Sigma F_x = 0; \qquad V_x - 12\cos 45° = 0; \qquad V_x = 8.485 \text{ lb}$

$\Sigma F_y = 0; \qquad N_y - 12\sin 45° = 0; \qquad N_y = 8.485 \text{ lb}$

$\Sigma M_z = 0; \qquad M_z - 12\sin 45°(3) = 0; \qquad M_z = 25.456 \text{ lb}\cdot\text{in.}$

$\Sigma M_y = 0; \qquad -T_y + 12\cos 45°(3) = 0; \qquad T_y = 25.456 \text{ lb}\cdot\text{in.}$

$\Sigma M_z = 0; \qquad M_z - 12\cos 45°(8) = 0; \qquad M_z = 67.882 \text{ lb}\cdot\text{in.}$

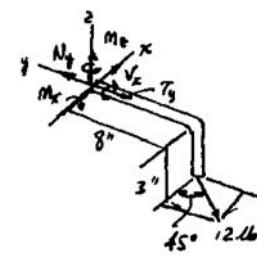

$$A = \pi(0.625^2) = 1.2272 \text{ in}^2$$

$$I = \frac{1}{4}\pi(0.625^4) = 0.1195 \text{ in}^4$$

$$J = \frac{1}{4}\pi(0.625^4) = 0.2397 \text{ in}^4$$

Point D:

$$(Q_D)_y = \frac{4(0.625)}{3\pi}\frac{1}{2}(\pi)(0.625^2) = 0.1628 \text{ in}^2$$

$$(\sigma_D)_y = \frac{N_z}{A} - \frac{M_x z}{I} = \frac{8.485}{1.2272} - \frac{25.456(0.625)}{0.1198}$$

$$= -126 \text{ psi} \qquad \textbf{Ans.}$$

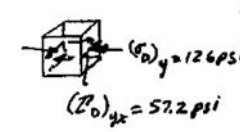

$$(\tau_D)_{yx} = \frac{V_s(Q_D)_z}{It} - \frac{T_y c}{J}$$

$$= \frac{8.485(0.1628)}{0.1198(1.25)} - \frac{(25.456)(0.625)}{0.2397}$$

$$= -57.2 \text{ psi} \qquad \textbf{Ans.}$$

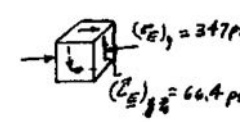

Point E:

$$(\sigma_E)_x = 0$$

$$(\sigma_E)_y = \frac{N_y}{A} - \frac{M_z x}{I} = \frac{8.485}{1.2272} - \frac{(67.882)(0.625)}{0.1198}$$

$$= -347 \text{ psi} \qquad \textbf{Ans.}$$

$$(\tau_E)_{yx} = \frac{V_z Q_E}{It} - \frac{Tc}{J}$$

$$= 0 - \frac{(25.456)(0.625)}{0.2397}$$

$$= -66.4 \text{ psi} \qquad \textbf{Ans.}$$

Ans:
$\sigma_D = -126$ psi, $\tau_D = 57.2$ psi,
$\sigma_E = -347$ psi, $\tau_E = 66.4$ psi

8–50. The coiled spring is subjected to a force P. If we assume the shear stress caused by the shear force at any vertical section of the coil wire to be uniform, show that the maximum shear stress in the coil is $\tau_{max} = P/A + PRr/J$, where J is the polar moment of inertia of the coil wire and A is its cross-sectional area.

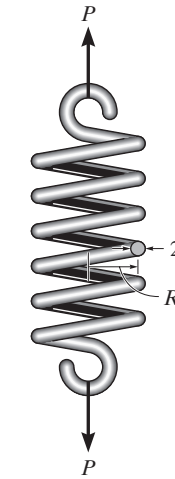

$$\frac{Tc}{J} = \text{max on perimeter} = \frac{PRr}{J}$$

$$\tau_{max} = \frac{V}{A} + \frac{Tc}{J} = \frac{P}{A} + \frac{PRr}{J}$$ **QED**

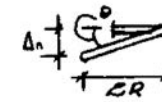

$\Delta_n = 2R\theta$

8–51. A post having the dimensions shown is subjected to the bearing load **P**. Specify the region to which this load can be applied without causing tensile stress to be developed at points A, B, C, and D.

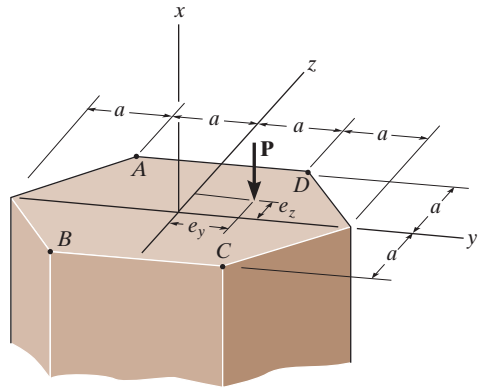

Equivalent Force System: As shown on FBD.

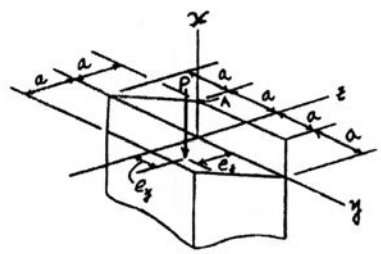

Section Properties:

$$A = 2a(2a) + 2\left[\frac{1}{2}(2a)a\right] = 6a^2$$

$$I_z = \frac{1}{12}(2a)(2a)^3 + 2\left[\frac{1}{36}(2a)a^3 + \frac{1}{2}(2a)a\left(a + \frac{a}{3}\right)^2\right]$$

$$= 5a^4$$

$$I_y = \frac{1}{12}(2a)(2a)^3 + 2\left[\frac{1}{36}(2a)a^3 + \frac{1}{2}(2a)a\left(\frac{a}{3}\right)^2\right]$$

$$= \frac{5}{3}a^4$$

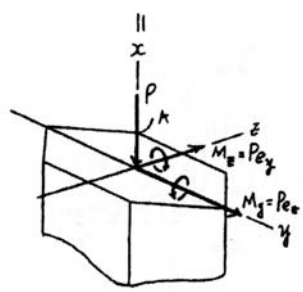

Normal Stress:

$$\sigma = \frac{N}{A} - \frac{M_z y}{I_z} + \frac{M_y z}{I_y}$$

$$= \frac{-P}{6a^2} - \frac{Pe_y y}{5a^4} - \frac{Pe_z z}{\frac{5}{3}a^4}$$

$$= \frac{P}{30a^4}\left(-5a^2 - 6e_y y - 18e_z z\right)$$

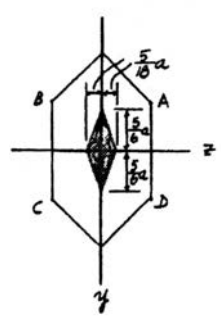

At point B where $y = -a$ and $z = -a$, we require $\sigma_B < 0$.

$$0 > \frac{P}{30a^4}\left[-5a^2 - 6(-a)\,e_y - 18(-a)\,e_z\right]$$

$$0 > -5a + 6e_y + 18e_z$$

$$6e_y + 18e_z < 5a \qquad \textbf{Ans.}$$

When $e_z = 0$, $\quad e_y < \frac{5}{6}a$

When $e_y = 0$, $\quad e_z < \frac{5}{18}a$

Repeat the same procedures for point A, C and D. The region where P can be applied without creating tensile stress at points A, B, C, and D is shown shaded in the diagram.

Ans:
$6e_y + 18e_z < 5a$

***8–52.** The vertebra of the spinal column can support a maximum compressive stress of σ_{max}, before undergoing a compression fracture. Determine the smallest force P that can be applied to a vertebra, if we assume this load is applied at an eccentric distance e from the centerline of the bone, and the bone remains elastic. Model the vertebra as a hollow cylinder with an inner radius r_i and outer radius r_o.

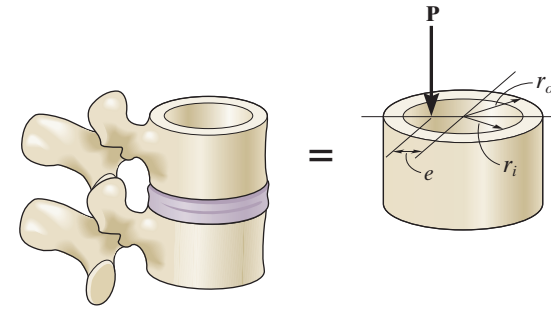

$$\sigma_{max} = \frac{P}{A} + \frac{Per_o}{\frac{\pi}{4}(r_0^4 - r_i^4)}$$

$$\sigma_{max} = P\left[\frac{1}{\pi(r_0^2 - r_i^2)} + \frac{4er_0}{\pi(r_0^4 - r_i^4)}\right]$$

$$\sigma_{max} = \frac{P}{\pi(r_0^2 - r_i^2)}\left[1 + \frac{4er_0}{(r_0^2 + r_i^2)}\right]$$

$$\sigma_{max} = \frac{P(r_0^2 + r_i^2 + 4er_0)}{\pi(r_0^2 - r_i^2)(r_0^2 + r_i^2)}$$

$$\sigma_{max} = \frac{P(r_0^2 + r_i^2 + 4er_0)}{\pi(r_0^4 - r_i^4)}$$

$$P = \frac{\delta_{max}\pi(r_0^4 - r_i^4)}{r_0^2 + r_i^2 + 4er_0}$$

8–53. The 1-in.-diameter rod is subjected to the loads shown. Determine the state of stress at point A, and show the results on a differential element located at this point.

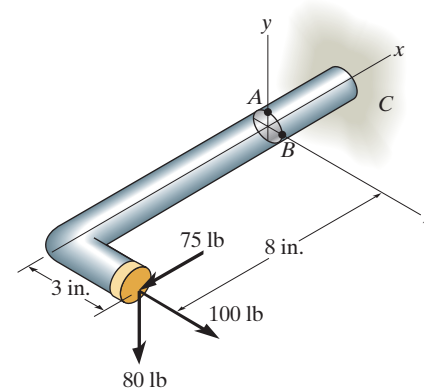

$\Sigma F_z = 0;\qquad V_z + 100 = 0;\qquad V_z = -100 \text{ lb}$

$\Sigma F_x = 0;\qquad N_x - 75 = 0;\qquad N_x = 75 \text{ lb}$

$\Sigma F_y = 0;\qquad V_y = 80 = 0;\qquad V_y = 80 \text{ lb}$

$\Sigma M_z = 0;\qquad M_z + 80(8) = 0;\qquad M_z = -640 \text{ lb}\cdot\text{in.}$

$\Sigma M_x = 0;\qquad T_2 + 80(3) = 0;\qquad T_x = -240 \text{ lb}\cdot\text{in.}$

$\Sigma M_y = 0;\qquad M_F + 100(8) - 75(3) = 0;\qquad M_y = -575 \text{ lb}\cdot\text{in.}$

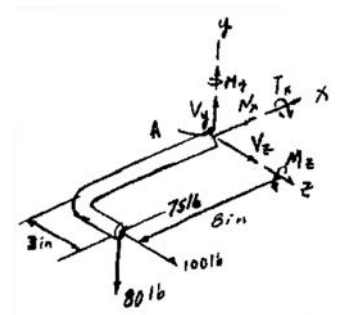

$$A = \frac{\pi}{4}d^2 = \frac{\pi}{4}(1^2) = \frac{1}{4}\pi \text{ in}^2$$

$$J = \frac{\pi}{2}c^4 = \frac{\pi}{4}(0.5^4) = 0.03125\pi \text{ in}^4$$

$$(Q_y)_A = 0$$

$$(Q_A)_A = \bar{y}'A = \frac{4(0.5)}{3\pi}\frac{1}{2}(\pi)(0.5^2) = 0.08333 \text{ in}^2$$

$$I_y = I_x = \frac{\pi}{4}r^4 = \frac{\pi}{4}(0.5^4) = 0.015625\pi \text{ in}^4$$

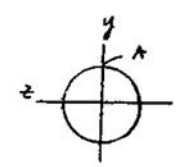

Normal stress: $\sigma = \dfrac{p}{A} + \dfrac{M_x y}{I_x} + \dfrac{M_y z}{I_y}$

$$\sigma_A = \frac{75}{\frac{1}{4}\pi} + \frac{640(0.5)}{0.0156\pi} + 0 = 6.61 \text{ ksi (T)}$$ **Ans.**

Shear stress:

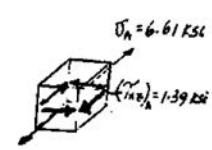

$$\tau = \frac{VQ}{It} + \frac{Tc}{J}$$

$$(\tau_{xz})_A = \frac{100(0.06333)}{0.0156\pi(1)} + \frac{240(0.5)}{0.0312\pi}$$

$$= 1.39 \text{ ksi}$$ **Ans.**

$$(\tau_{xy})_A = 0$$ **Ans.**

Ans:
$\sigma_A = 6.61$ ksi (T), $\tau_A = 1.39$ ksi

8–54. The 1-in.-diameter rod is subjected to the loads shown. Determine the state of stress at point B, and show the results on a differential element located at this point.

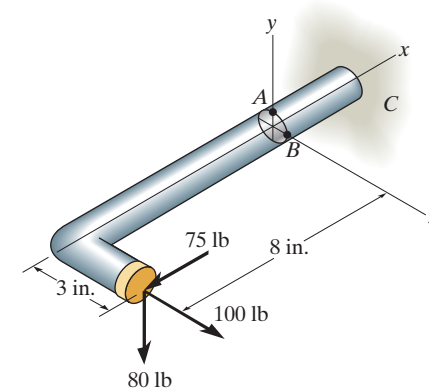

$\Sigma F_z = 0;\qquad V_z + 100 = 0;\qquad V_z = -100 \text{ lb}$

$\Sigma F_x = 0;\qquad N_x - 75 = 0;\qquad N_x = 75.0 \text{ lb}$

$\Sigma F_y = 0;\qquad V_y - 80 = 0;\qquad V_y = 80 \text{ lb}$

$\Sigma M_z = 0;\qquad M_z + 80(8) = 0;\qquad M_z = -640 \text{ lb}\cdot\text{in.}$

$\Sigma M_x = 0;\qquad T_x + 80(3) = 0;\qquad T_x = -240 \text{ lb}\cdot\text{in.}$

$\Sigma M_y = 0;\qquad M_y + 100(8) - 75(3) = 0;\qquad M_y = -575 \text{ lb}\cdot\text{in.}$

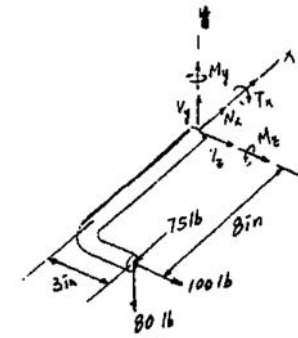

$$A = \frac{\pi}{4}d^2 = \frac{\pi}{2}(1^2) = \frac{\pi}{4}\text{ in}^2$$

$$J = \frac{\pi}{2}c^4 = \frac{\pi}{2}(0.5^4) = 0.03125\pi \text{ in}^4$$

$$(Q_y)_y = \frac{4(0.5)}{3\pi}\frac{1}{2}\left(\frac{\pi}{4}\right)(1^2) = 0.08333 \text{ in}^2$$

$$I_y = I_x = \frac{\pi}{4}r^4 = \frac{\pi}{4}(0.5^4) = 0.015625\pi \text{ in}^4$$

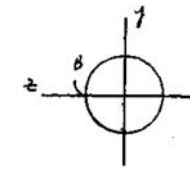

Normal stress:

$$\sigma = \frac{p}{A} + \frac{M_x y}{I_x} + \frac{M_y z}{I_y}$$

$$\sigma_A = \frac{75}{\frac{\pi}{4}} + 0 - \frac{575(0.5)}{0.015625\pi} = -5.76 \text{ ksi} = 5.76 \text{ ksi (C)} \qquad \textbf{Ans.}$$

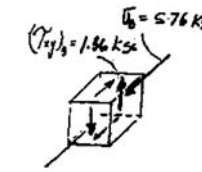

Shear stress:

$$\tau = \frac{VQ}{It} \text{ and } \tau = \frac{Tc}{J}$$

$$(\tau_{xy})_A = \frac{Tc}{J} - \frac{VQ}{It} = \frac{240(0.5)}{0.03125\pi} + \frac{80(0.0833)}{0.015625\pi(1)} = 1.36 \text{ ksi} \qquad \textbf{Ans.}$$

$$(\tau_{xz})_A = 0 \qquad \textbf{Ans.}$$

Ans:
$\sigma_B = 5.76$ ksi (C), $\tau_B = 1.36$ ksi

8–55. Determine the state of stress at point A on the cross section of the post at section a–a. Indicate the results on a differential element at the point.

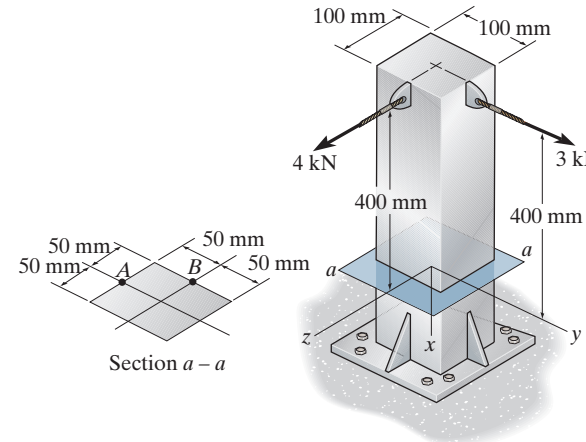

Internal Loadings: Considering the equilibrium of the free-body diagram of the post's upper segment, Fig. a,

$\Sigma F_y = 0; \quad V_y + 3 = 0 \qquad V_y = -3 \text{ kN}$

$\Sigma F_z = 0; \quad V_z + 4 = 0 \qquad V_z = -4 \text{ kN}$

$\Sigma M_x = 0; \quad T = 0$

$\Sigma M_y = 0; \quad M_y + 4(0.4) = 0 \qquad M_y = -1.6 \text{ kN} \cdot \text{m}$

$\Sigma M_z = 0; \quad M_z - 3(0.4) = 0 \qquad M_z = -1.2 \text{ kN} \cdot \text{m}$

Section Properties: The moment of inertia about the y and z axes of the post's cross section is

$$I_y = I_z = \frac{1}{12}(0.1)(0.1^3) = 8.3333(10^{-6}) \text{ m}^4$$

Referring to Fig. b,

$$(Q_y)_A = 0$$

$$(Q_z)_A = 0.025(0.05)(0.1) = 0.125(10^{-3}) \text{ m}^3$$

Normal Stress: The normal stress is contributed by bending stress only. Thus,

$$\sigma = -\frac{M_z y}{I_z} + \frac{M_y z}{I_y}$$

For point A, $y = -0.05$ m and $z = 0$. Then

$$\sigma_A = \frac{1.2(10^3)(-0.05)}{8.3333(10^{-6})} + 0 = 7.20 \text{ MPa (T)} \qquad \textbf{Ans.}$$

Shear Stress: Then transverse shear stress at point A is

$$[(\tau_{xy})_V]_A = \frac{V_y(Q_y)_A}{I_z t} = 0 \qquad \textbf{Ans.}$$

$$[(\tau_{xz})_V]_A = \frac{V_z(Q_z)_A}{I_y t} = \frac{4(10^3)[0.125(10^{-3})]}{8.3333(10^{-6})(0.1)} = 0.6 \text{ MPa} \qquad \textbf{Ans.}$$

The state of stress at point A is represented on the elements shown in Figs. c and d, respectively.

8–55. Continued

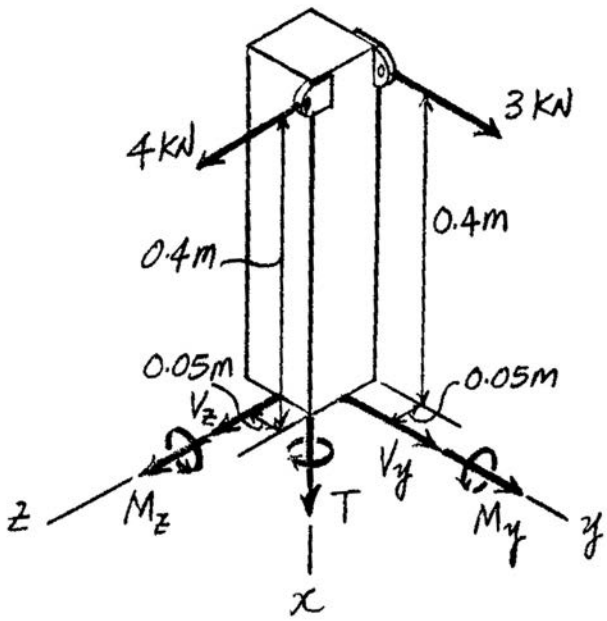

(a)

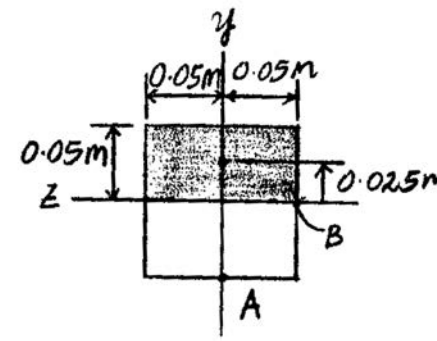

(b)

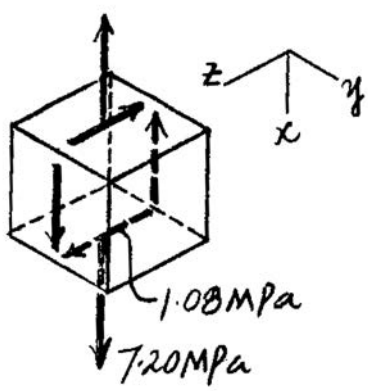

(c)

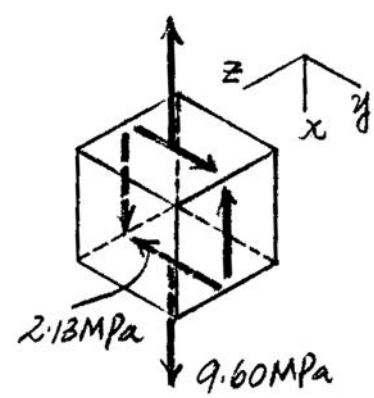

(d)

Ans:
$\sigma_A = 7.20$ MPa (T), $\tau_A = 0.6$ MPa

***8–56.** Determine the state of stress at point B on the cross section of the post at section a–a. Indicate the results on a differential element at the point.

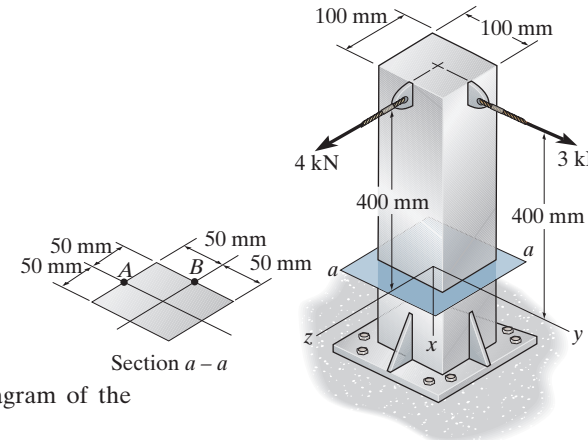

Internal Loadings: Considering the equilibrium of the free-body diagram of the post's upper segment, Fig. a,

$\Sigma F_y = 0; \quad V_y + 3 = 0 \qquad V_y = -3 \text{ kN}$

$\Sigma F_z = 0; \quad V_z + 4 = 0 \qquad V_z = -4 \text{ kN}$

$\Sigma M_x = 0; \quad T = 0$

$\Sigma M_y = 0; \quad M_y + 4(0.4) = 0 \qquad M_y = -1.6 \text{ kN} \cdot \text{m}$

$\Sigma M_z = 0; \quad M_z - 3(0.4) = 0 \qquad M_z = 1.2 \text{ kN} \cdot \text{m}$

Section Properties: The moment of inertia about the y and z axes of the post's cross section is

$$I_y = I_z = \frac{1}{12}(0.1)(0.1^3) = 8.3333(10^{-6}) \text{ m}^4$$

Referring to Fig. b,

$$(Q_z)_B = 0$$

$$(Q_y)_B = 0.025(0.05)(0.1) = 0.125(10^{-3}) \text{ m}^3$$

Normal Stress: The normal stress is contributed by bending stress only. Thus,

$$\sigma = -\frac{M_z y}{I_z} + \frac{M_y z}{I_y}$$

For point B, $y = 0$ and $z = -0.05$ m. Then

$$\sigma_B = -0 + \frac{-1.6(10^3)(-0.05)}{8.3333(10^{-6})} = 9.60 \text{ MPa (T)} \qquad \textbf{Ans.}$$

Shear Stress: Then transverse shear stress at point B is

$$\left[(\tau_{xy})_V\right]_B = \frac{V_z(Q_z)_A}{I_y t} = 0 \qquad \textbf{Ans.}$$

$$\left[(\tau_{xy})_V\right]_B = \frac{V_y(Q_y)_A}{I_z t} = \frac{3(10^3)[0.125(10^{-3})]}{8.3333(10^{-6})(0.1)} = 0.45 \text{ MPa} \qquad \textbf{Ans.}$$

The state of stress at point B is represented on the elements shown in Figs. c and d, respectively.

8–56. Continued

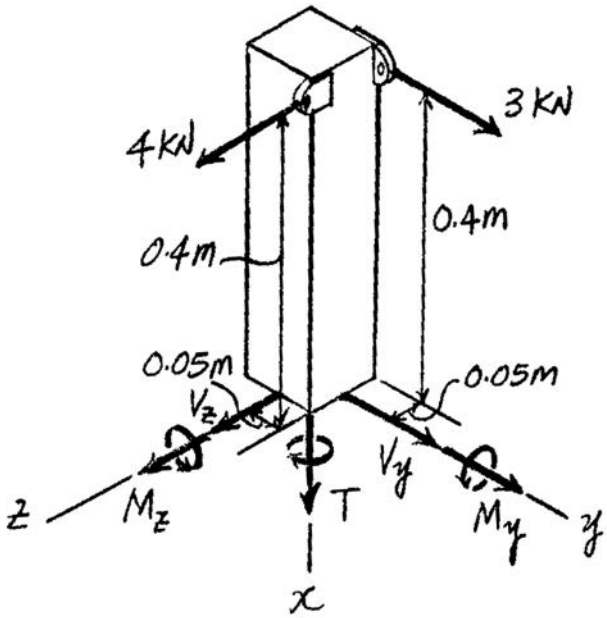

(a)

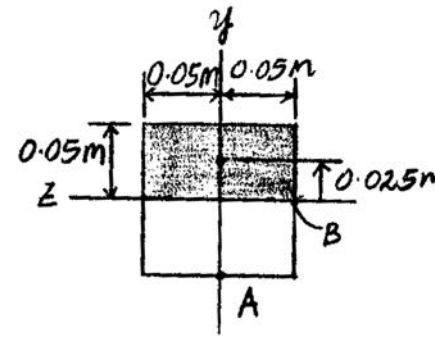

(b)

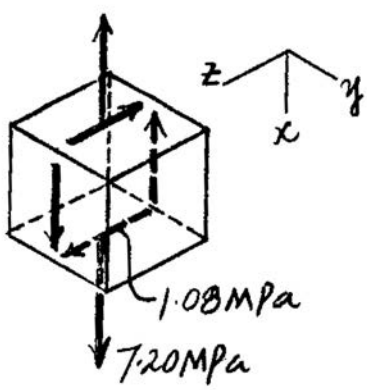

(c)

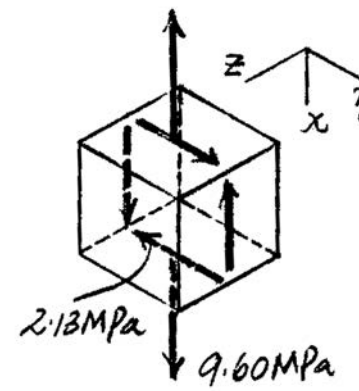

(d)

8–57. The sign is subjected to the uniform wind loading. Determine the stress components at points A and B on the 100-mm-diameter supporting post. Show the results on a volume element located at each of these points.

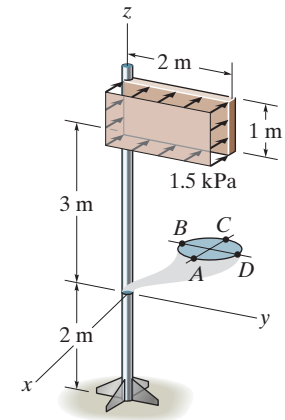

Point A:

$$\sigma_A = \frac{Mc}{I} = \frac{10.5(10^3)(0.05)}{\frac{\pi}{4}(0.05)^4} = 107 \text{ MPa (T)}$$ **Ans.**

$$\tau_A = \frac{Tc}{J} = \frac{3(10^3)(0.05)}{\frac{\pi}{4}(0.05)^4} = 15.279(10^6) = 15.3 \text{ MPa}$$ **Ans.**

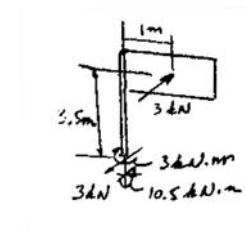

Point B:

$$\sigma_B = 0$$ **Ans.**

$$\tau_B = \frac{Tc}{J} - \frac{VQ}{It} = 15.279(10^6) - \frac{3000(4(0.05)/3\pi))(\frac{1}{2})(\pi)(0.05)^2}{\frac{\pi}{4}(0.05)^4(0.1)}$$

$$\tau_B = 14.8 \text{ MPa}$$ **Ans.**

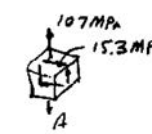

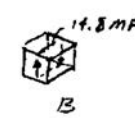

Ans:
$\sigma_A = 107$ MPa (T), $\tau_A = 15.3$ MPa,
$\sigma_B = 0$, $\tau_B = 14.8$ MPa

8–58. The sign is subjected to the uniform wind loading. Determine the stress components at points C and D on the 100-mm-diameter supporting post. Show the results on a volume element located at each of these points.

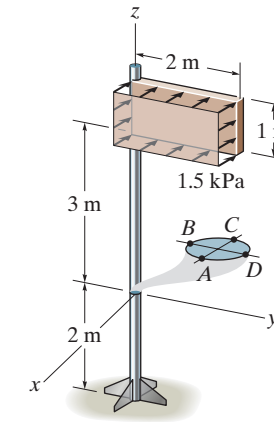

Point C:

$$\sigma_C = \frac{Mc}{I} = \frac{10.5(10^3)(0.05)}{\frac{\pi}{4}(0.05)^4} = 107 \text{ MPa (C)} \qquad \textbf{Ans.}$$

$$\tau_C = \frac{T_C}{J} = \frac{3(10^3)(0.05)}{\frac{\pi}{2}(0.05)^4} = 15.279(10^6) = 15.3 \text{ MPa} \qquad \textbf{Ans.}$$

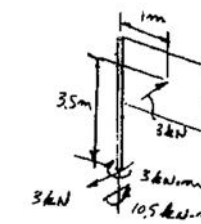

Point D:

$$\sigma_D = 0 \qquad \textbf{Ans.}$$

$$\tau_D = \frac{Tc}{J} + \frac{VQ}{It} = 15.279(10^6) + \frac{3(10^3)(4(0.05)/3\pi)(\frac{1}{2})(\pi)(0.05)^2}{\frac{\pi}{4}(0.05)^4(0.1)} = 15.8 \text{ MPa} \qquad \textbf{Ans.}$$

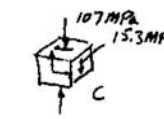

Ans:
$\sigma_C = 107$ MPa (C), $\tau_C = 15.3$ MPa,
$\sigma_D = 0$, $\tau_D = 15.8$ MPa

8–59. If $P = 60$ kN, determine the maximum normal stress developed on the cross section of the column.

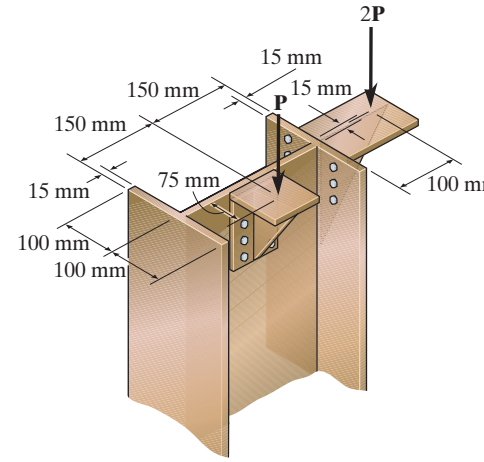

Equivalent Force System: Referring to Fig. *a*,

$$+\uparrow \Sigma F_x = (F_R)_x; \qquad -60 - 120 = -F \qquad F = 180 \text{ kN}$$

$$\Sigma M_y = (M_R)_y; \qquad -60(0.075) = -M_y \qquad M_y = 4.5 \text{ kN}\cdot\text{m}$$

$$\Sigma M_z = (M_R)_z; \qquad -120(0.25) = -M_z \qquad M_z = 30 \text{ kN}\cdot\text{m}$$

Section Properties: The cross-sectional area and the moment of inertia about the y and z axes of the cross section are

$$A = 0.2(0.3) - 0.185(0.27) = 0.01005 \text{ m}^2$$

$$I_z = \frac{1}{12}(0.2)(0.3^3) - \frac{1}{12}(0.185)(0.27^3) = 0.14655(10^{-3}) \text{ m}^4$$

$$I_y = 2\left[\frac{1}{12}(0.015)(0.2^3)\right] + \frac{1}{12}(0.27)(0.015^3) = 20.0759(10^{-6}) \text{ m}^4$$

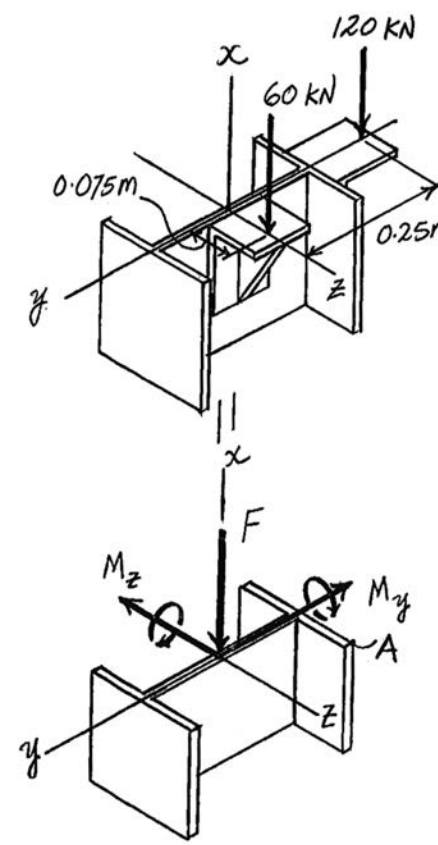

Normal Stress: The normal stress is the combination of axial and bending stress. Here, **F** is negative since it is a compressive force. Also, $\mathbf{M}_y$ and $\mathbf{M}_z$ are negative since they are directed towards the negative sense of their respective axes. By inspection, point A is subjected to a maximum normal stress. Thus,

$$\sigma = \frac{N}{A} - \frac{M_z y}{I_z} + \frac{M_y z}{I_y}$$

$$\sigma_{\max} = \sigma_A = \frac{-180(10^3)}{0.01005} - \frac{[-30(10^3)](-0.15)}{0.14655(10^{-3})} + \frac{[-4.5(10^3)](0.1)}{20.0759(10^{-6})}$$

$$= -71.0 \text{ MPa} = 71.0 \text{ MPa (C)} \qquad \textbf{Ans.}$$

Ans:
$\sigma_{\max} = 71.0$ MPa (C)

***8–60.** Determine the maximum allowable force **P**, if the column is made from material having an allowable normal stress of $\sigma_{\text{allow}} = 100$ MPa.

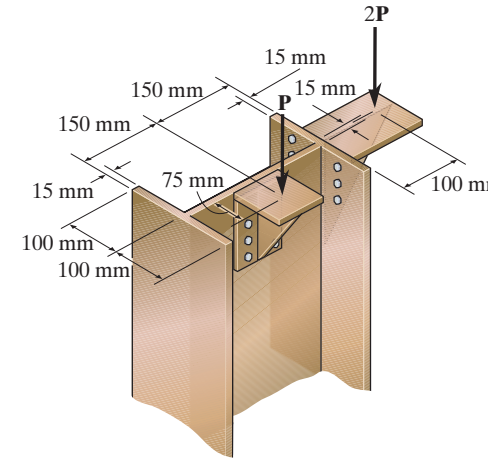

Equivalent Force System: Referring to Fig. *a*,

$$+\uparrow \Sigma F_x = (F_R)_x; \quad -P - 2P = -F$$

$$F = 3P$$

$$\Sigma M_y = (M_R)_y; \quad -P(0.075) = -M_y$$

$$M_y = 0.075P$$

$$\Sigma M_z = (M_R)_z; \quad -2P(0.25) = -M_z$$

$$M_z = 0.5P$$

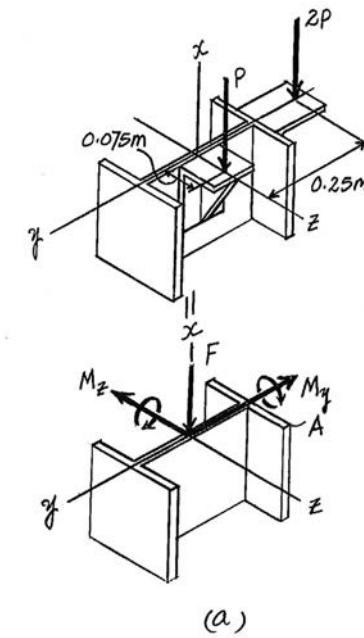

Section Properties: The cross-sectional area and the moment of inertia about the y and z axes of the cross section are

$$A = 0.2(0.3) - 0.185(0.27) = 0.01005\text{m}^2$$

$$I_z = \frac{1}{12}(0.2)(0.3^3) - \frac{1}{12}(0.185)(0.27^3) = 0.14655(10^{-3})\,\text{m}^4$$

$$I_y = 2\left[\frac{1}{12}(0.15)(0.2^3)\right] + \frac{1}{12}(0.27)(0.015^3) = 20.0759(10^{-6})\,\text{m}^4$$

Normal Stress: The normal stress is the combination of axial and bending stress. Here, **F** is negative since it is a compressive force. Also, $\mathbf{M}_y$ and $\mathbf{M}_z$ are negative since they are directed towards the negative sense of their respective axes. By inspection, point A is subjected to a maximum normal stress, which is in compression. Thus,

$$\sigma = \frac{N}{A} - \frac{M_z y}{I_z} + \frac{M_y z}{I_y}$$

$$-100(10^6) = -\frac{3P}{0.01005} - \frac{(-0.5P)(-0.15)}{0.14655(10^{-3})} + \frac{-0.075P(0.1)}{20.0759(10^{-6})}$$

$$P = 84470.40\text{ N} = 84.5\text{k N}$$ **Ans.**

8–61. The C-frame is used in a riveting machine. If the force at the ram on the clamp at D is $P = 8$ kN, sketch the stress distribution acting over the section a–a.

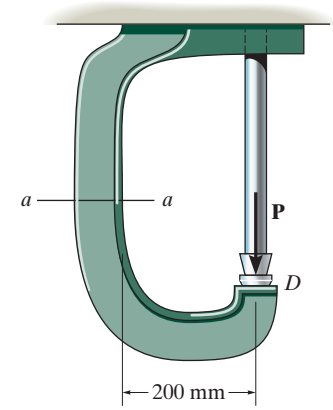

$$\bar{x} = \frac{\Sigma \bar{x} A}{\Sigma A} = \frac{(0.005)(0.04)(0.01) + 0.04(0.06)(0.01)}{0.04(0.01) + 0.06(0.01)} = 0.026 \text{ m}$$

$$A = 0.04(0.01) + 0.06(0.01) = 0.001 \text{ m}^2$$

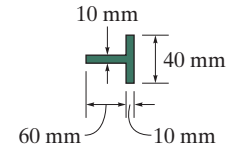

$$I = \frac{1}{12}(0.04)(0.01^3) + (0.04)(0.01)(0.026 - 0.005)^2$$
$$+ \frac{1}{12}(0.01)(0.06^3) + 0.01(0.06)(0.040 - 0.026)^2 = 0.4773(10^{-6}) \text{ m}^4$$

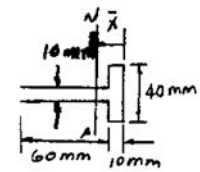

$$(\sigma_{\max})_t = \frac{P}{A} + \frac{Mx}{I} = \frac{8(10^3)}{0.001} + \frac{1.808(10^3)0.026}{0.4773(10^{-6})}$$

$$= 106.48 \text{ MPa} = 106 \text{ MPa} \qquad \textbf{Ans.}$$

$$(\sigma_{\max})_c = \frac{P}{A} - \frac{Mc}{I} = \frac{8(10^3)}{0.001} - \frac{1.808(10^3)(0.070 - 0.026)}{0.4773(10^{-6})}$$

$$= -158.66 \text{ MPa} = -159 \text{ MPa} \qquad \textbf{Ans.}$$

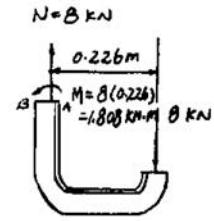

$$\frac{x}{158.66} = \frac{70 - x}{106.48}; \qquad x = 41.9 \text{ mm}$$

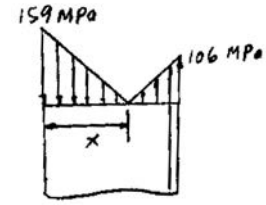

Ans:
$(\sigma_{\max})_t = 106$ MPa, $(\sigma_{\max})_c = -159$ MPa

8–62. Determine the maximum ram force P that can be applied to the clamp at D if the allowable normal stress for the material is $\sigma_{\text{allow}} = 180$ MPa.

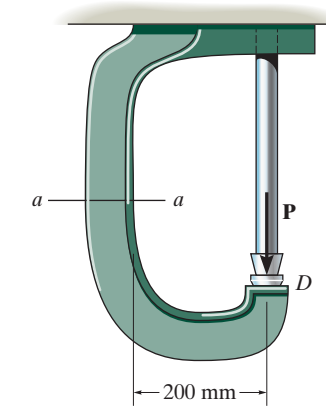

$$\bar{x} = \frac{\Sigma \bar{x} A}{\Sigma A} = \frac{(0.005)(0.04)(0.01) + 0.04(0.06)(0.01)}{0.04(0.01) + 0.06(0.01)} = 0.026 \text{ m}$$

$$A = 0.04(0.01) + 0.06(0.01) = 0.001 \text{ m}^2$$

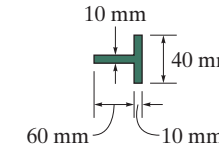

$$I = \frac{1}{12}(0.04)(0.01^3) + (0.04)(0.01)(0.026 - 0.005)^2 + \frac{1}{12}(0.01)(0.06^3) + 0.01(0.06)(0.040 - 0.026)^2 = 0.4773(10^{-6}) \text{ m}^4$$

$$\sigma = \frac{P}{A} \pm \frac{Mx}{I}$$

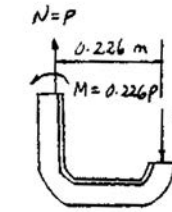

Assume tension failure,

$$180(10^6) = \frac{P}{0.001} + \frac{0.226P(0.026)}{0.4773(10^{-6})}$$

$$P = 13524 \text{ N} = 13.5 \text{ kN}$$

Assume compression failure,

$$-180(10^6) = \frac{P}{0.001} - \frac{0.226P(0.070 - 0.026)}{0.4773(10^{-6})}$$

$P = 9076 \text{ N} = 9.08 \text{ kN}$ (controls) **Ans.**

Ans:
$P = 9.08$ kN

8–63. The uniform sign has a weight of 1500 lb and is supported by the pipe AB, which has an inner radius of 2.75 in. and an outer radius of 3.00 in. If the face of the sign is subjected to a uniform wind pressure of $p = 150\ \text{lb/ft}^2$, determine the state of stress at points C and D. Show the results on a differential volume element located at each of these points. Neglect the thickness of the sign, and assume that it is supported along the outside edge of the pipe.

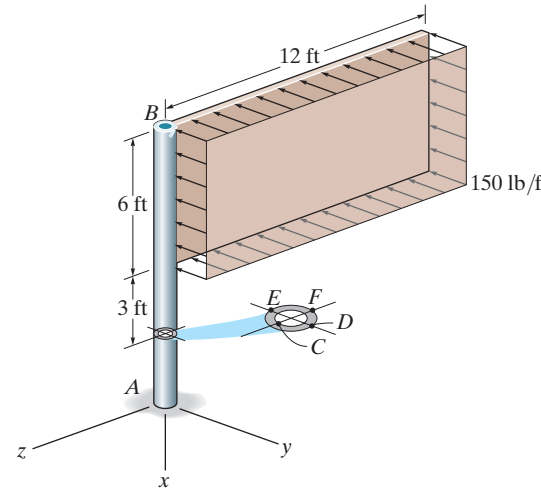

Internal Forces and Moments: As shown on FBD.

$$\Sigma F_x = 0; \quad 1.50 + N_x = 0 \qquad N_x = -15.0\ \text{kip}$$

$$\Sigma F_y = 0; \quad V_y - 10.8 = 0 \qquad V_y = 10.8\ \text{kip}$$

$$\Sigma F_z = 0; \quad V_z = 0$$

$$\Sigma M_x = 0; \quad T_x - 10.8(6) = 0 \qquad T_x = 64.8\ \text{kip}\cdot\text{ft}$$

$$\Sigma M_y = 0; \quad M_y - 1.50(6) = 0 \qquad M_y = 9.00\ \text{kip}\cdot\text{ft}$$

$$\Sigma M_z = 0; \quad 10.8(6) + M_z = 0 \qquad M_z = -64.8\ \text{kip}\cdot\text{ft}$$

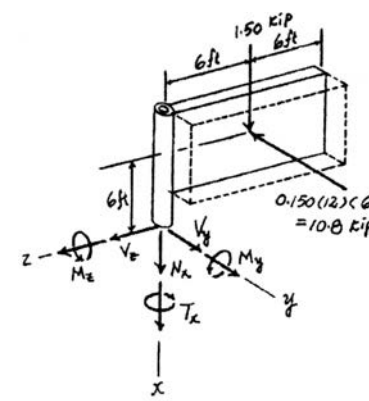

Section Properties:

$$A = \pi\left(3^2 - 2.75^2\right) = 1.4375\pi\ \text{in}^2$$

$$I_y = I_z = \frac{\pi}{4}\left(3^4 - 2.75^4\right) = 18.6992\ \text{in}^4$$

$$(Q_C)_z = (Q_D)_y = 0$$

$$(Q_C)_y = (Q_D)_z = \frac{4(3)}{3\pi}\left[\frac{1}{2}(\pi)\left(3^2\right)\right] - \frac{4(2.75)}{3\pi}\left[\frac{1}{2}(\pi)\left(2.75^2\right)\right]$$

$$= 4.13542\ \text{in}^3$$

$$J = \frac{\pi}{2}\left(3^4 - 2.75^4\right) = 37.3984\ \text{in}^4$$

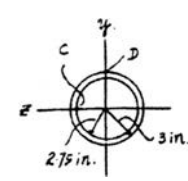

Normal Stress:

$$\sigma = \frac{N}{A} - \frac{M_z y}{I_z} + \frac{M_y z}{I_y}$$

$$\sigma_C = \frac{-1.50}{1.4375\pi} - \frac{(-64.8)(12)(0)}{18.6992} + \frac{9.00(12)(2.75)}{18.6992}$$

$$= 15.6\ \text{ksi}\ (\mathbf{T}) \qquad \textbf{Ans.}$$

$$\sigma_D = \frac{-1.50}{1.4375\pi} - \frac{(-64.8)(12)(3)}{18.6992} + \frac{9.00(12)(0)}{18.6992}$$

$$= 124\ \text{ksi}\ (\mathbf{T}) \qquad \textbf{Ans.}$$

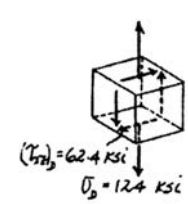

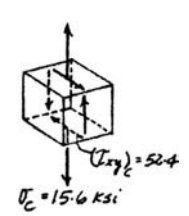

Shear Stress: The tranverse shear stress in the z and y directions and the torsional shear stress can be obtained using the shear formula and the torsion formula, $\tau_V = \dfrac{VQ}{It}$ and $\tau_{\text{twist}} = \dfrac{T\rho}{J}$, respectively.

$$(\tau_{xz})_D = \tau_{\text{twist}} = \frac{64.8(12)(3)}{37.3984} = 62.4 \text{ ksi} \qquad \textbf{Ans.}$$

$$(\tau_{xy})_D = \tau_{V_y} = 0 \qquad \textbf{Ans.}$$

$$(\tau_{xy})_C = \tau_{V_y} - \tau_{\text{twist}}$$

$$= \frac{10.8(4.13542)}{18.6992(2)(0.25)} - \frac{64.8(12)(2.75)}{37.3984}$$

$$= -52.4 \text{ ksi} \qquad \textbf{Ans.}$$

$$(\tau_{xz})_C = \tau_{V_z} = 0 \qquad \textbf{Ans.}$$

Ans:
$\sigma_C = 15.6$ ksi (T), $\sigma_D = 124$ ksi (T),
$\tau_D = 62.4$ ksi, $\tau_C = 52.4$ ksi

***8–64.** Solve Prob. 8–63 for points E and F.

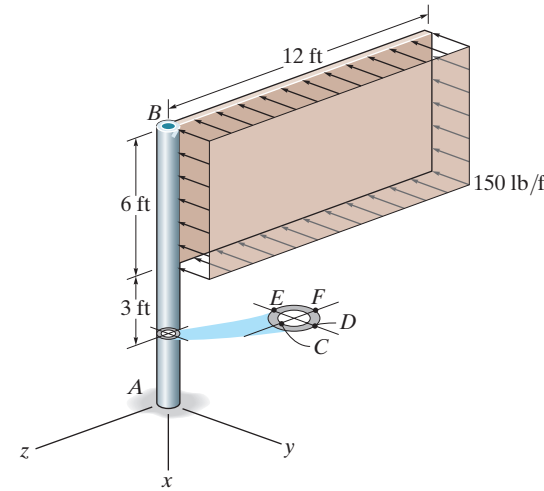

Internal Forces and Moments: As shown on FBD.

$$\Sigma F_x = 0; \quad 1.50 + N_x = 0 \quad N_x = -1.50 \text{ kip}$$

$$\Sigma F_y = 0; \quad V_y - 10.8 = 0 \quad V_y = 10.8 \text{ kip}$$

$$\Sigma F_z = 0; \quad V_z = 0$$

$$\Sigma M_x = 0; \quad T_x - 10.8(6) = 0 \quad T_x = 64.8 \text{ kip} \cdot \text{ft}$$

$$\Sigma M_y = 0; \quad M_y - 1.50(6) = 0 \quad M_y = 9.00 \text{ kip} \cdot \text{ft}$$

$$\Sigma M_z = 0; \quad 10.8(6) + M_z = 0 \quad M_z = -64.8 \text{ kip} \cdot \text{ft}$$

Section Properties:

$$A = \pi\left(3^2 - 2.75^2\right) = 1.4375\pi \text{ in}^2$$

$$I_y = I_z = \frac{\pi}{4}\left(3^4 - 2.75^4\right) = 18.6992 \text{ in}^4$$

$$(Q_F)_z = (Q_E)_y = 0$$

$$(Q_F)_y = (Q_E)_z = \frac{4(3)}{3\pi}\left[\frac{1}{2}(\pi)\left(3^2\right)\right] - \frac{4(2.75)}{3\pi}\left[\frac{1}{2}(\pi)\left(2.75^2\right)\right]$$

$$= 4.13542 \text{ in}^3$$

$$J = \frac{\pi}{2}\left(3^4 - 2.75^4\right) = 37.3984 \text{ in}^4$$

Normal Stress:

$$\sigma = \frac{N}{A} - \frac{M_z y}{I_z} + \frac{M_y z}{I_y}$$

$$\sigma_F = \frac{-1.50}{1.4375\pi} - \frac{(-64.8)(12)(0)}{18.6992} + \frac{9.00(12)(-3)}{18.6992}$$

$$= -17.7 \text{ ksi} = 17.7 \text{ ksi (C)}$$ **Ans.**

$$\sigma_E = \frac{-1.50}{1.4375\pi} - \frac{(-64.8)(12)(-3)}{18.6992} + \frac{9.00(12)(0)}{18.6992}$$

$$= -125 \text{ ksi} = 125 \text{ ksi (C)}$$ **Ans.**

8–64. Continued

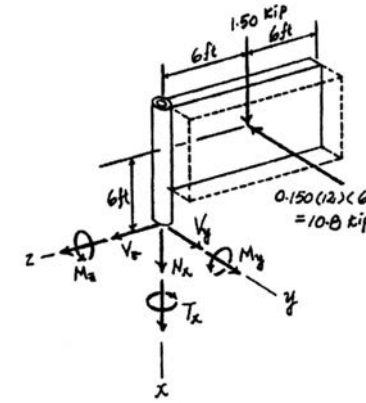

Shear Stress: The tranverse shear stress in the z and y directions and the torsional shear stress can be obtained using the shear formula and the torsion formula, $\tau_V = \dfrac{VQ}{It}$ and $\tau_{\text{twist}} = \dfrac{T\rho}{J}$, respectively.

$$(\tau_{xz})_E = -\tau_{\text{twist}} = -\frac{64.8(12)(3)}{37.3984} = -62.4 \text{ ksi}$$ **Ans.**

$$(\tau_{xy})_E = \tau_{V_y} = 0$$ **Ans.**

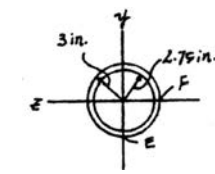

$$(\tau_{xy})_F = \tau_{V_y} + \tau_{\text{twist}}$$

$$= \frac{10.8(4.13542)}{18.6992(2)(0.25)} + \frac{64.8(12)(3)}{37.3984}$$

$$= 67.2 \text{ ksi}$$ **Ans.**

$$(\tau_{xz})_F = \tau_{V_y} = 0$$ **Ans.**

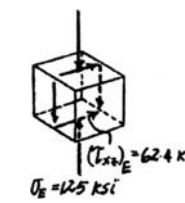

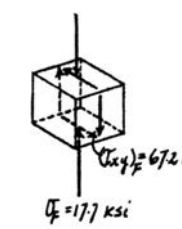

8–65. Determine the state of stress at point A on the cross section of the pipe at section a–a.

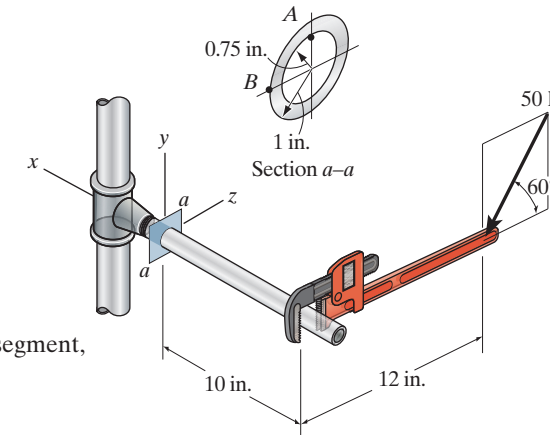

Internal Loadings: Referring to the free-body diagram of the pipe's right segment, Fig. *a*,

$\Sigma F_y = 0;\quad V_y - 50\sin 60° = 0 \qquad V_y = 43.30 \text{ lb}$

$\Sigma F_z = 0;\quad V_z - 50\cos 60° = 0 \qquad V_z = 25 \text{ lb}$

$\Sigma M_x = 0;\ T + 50\sin 60°(12) = 0 \qquad T = -519.62 \text{ lb}\cdot\text{in}$

$\Sigma M_y = 0;\ M_y - 50\cos 60°(10) = 0 \qquad M_y = 250 \text{ lb}\cdot\text{in}$

$\Sigma M_z = 0;\ M_z + 50\sin 60°(10) = 0 \qquad M_z = -433.01 \text{ lb}\cdot\text{in}$

Section Properties: The moment of inertia about the y and z axes and the polar moment of inertia of the pipe are

$$I_y = I_z = \frac{\pi}{4}\left(1^4 - 0.75^4\right) = 0.53689 \text{ in}^4$$

$$J = \frac{\pi}{2}\left(1^4 - 0.75^4\right) = 1.07379 \text{ in}^4$$

Referring to Fig. *b*,

$$\left(Q_y\right)_A = 0$$

$$\left(Q_z\right)_A = \bar{y}_1' A_1' - \bar{y}_2' A_2' = \frac{4(1)}{3\pi}\left[\frac{\pi}{2}\left(1^2\right)\right] - \frac{4(0.75)}{3\pi}\left[\frac{\pi}{2}\left(0.75^2\right)\right] = 0.38542 \text{ in}^3$$

Normal Stress: The normal stress is contributed by bending stress only. Thus,

$$\sigma = -\frac{M_z y}{I_z} + \frac{M_y z}{I_y}$$

For point A, $y = 0.75$ in and $z = 0$. Then

$$\sigma_A = -\frac{-433.01(0.75)}{0.53689} + 0 = 604.89 \text{ psi} = 605 \text{ psi (T)} \qquad \textbf{Ans.}$$

Shear Stress: The torsional shear stress developed at point A is

$$\left[\left(\tau_{xz}\right)_T\right]_A = \frac{T\rho_A}{J} = \frac{519.62(0.75)}{1.07379} = 362.93 \text{ psi}$$

8–65. Continued

The transverse shear stress developed at point A is

$$\left[\left(\tau_{xy}\right)_V\right]_A = 0$$

$$\left[\left(\tau_{xz}\right)_V\right]_A = \frac{V_z\left(Q_z\right)_A}{I_y t} = \frac{25(0.38542)}{0.53689(2 - 1.5)} = 35.89 \text{ psi}$$

Combining these two shear stress components,

$$\left(\tau_{xy}\right)_A = 0 \qquad \textbf{Ans.}$$

$$\left(\tau_{xz}\right)_A = \left[\left(\tau_{xz}\right)_T\right]_A - \left[\left(\tau_{xz}\right)_V\right]_A$$

$$= 362.93 - 35.89 = 327 \text{ psi} \qquad \textbf{Ans.}$$

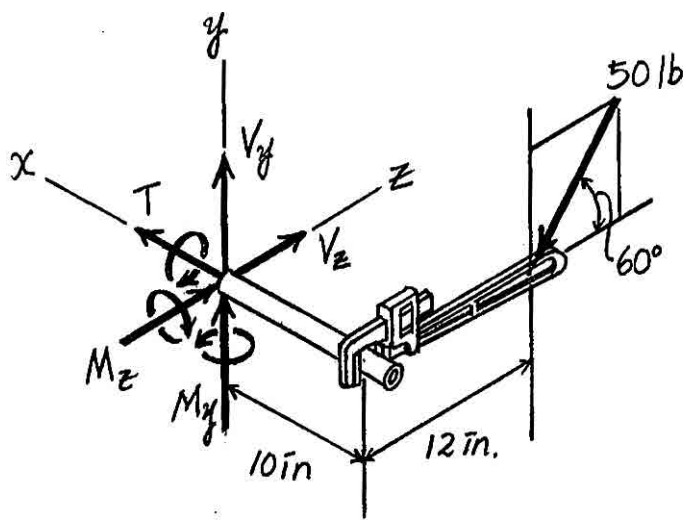

(a)

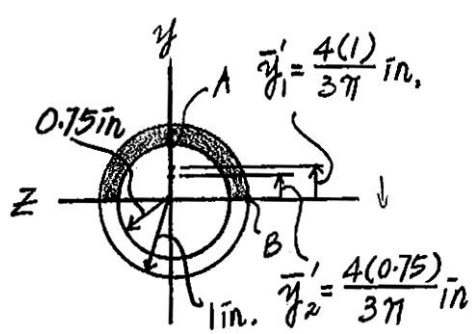

(b)

Ans:
$\sigma_A = 605$ psi (T), $\tau_A = 327$ psi

8–66. Determine the state of stress at point B on the cross section of the pipe at section a–a.

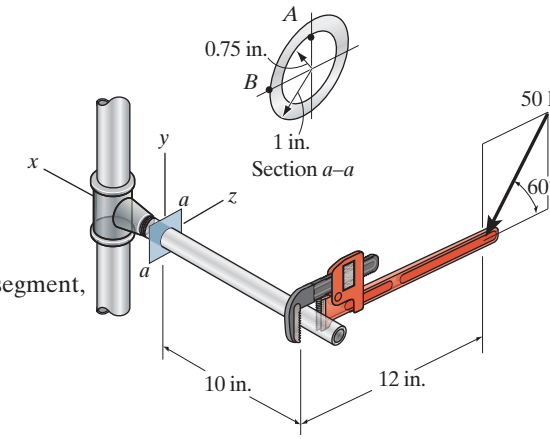

Internal Loadings: Referring to the free-body diagram of the pipe's right segment, Fig. *a*,

$\Sigma F_y = 0; \quad V_y - 50\sin 60° = 0 \qquad V_y = 43.30 \text{ lb}$

$\Sigma F_z = 0; \quad V_z - 50\cos 60° = 0 \qquad V_z = 25 \text{ lb}$

$\Sigma M_x = 0; \quad T + 50\sin 60°(12) = 0 \qquad T = -519.62 \text{ lb}\cdot\text{in}$

$\Sigma M_y = 0; \quad M_y - 50\cos 60°(10) = 0 \qquad M_y = 250 \text{ lb}\cdot\text{in}$

$\Sigma M_z = 0; \quad M_z + 50\sin 60°(10) = 0 \qquad M_z = -433.01 \text{ lb}\cdot\text{in}$

Section Properties: The moment of inertia about the y and z axes and the polar moment of inertia of the pipe are

$$I_y = I_z = \frac{\pi}{4}\left(1^4 - 0.75^4\right) = 0.53689 \text{ in}^4$$

$$J = \frac{\pi}{2}\left(1^4 - 0.75^4\right) = 1.07379 \text{ in}^4$$

Referring to Fig. *b*,

$$\left(Q_z\right)_B = 0$$

$$\left(Q_y\right)_B = \bar{y}_1' A_1' - \bar{y}_2' A_2' = \frac{4(1)}{3\pi}\left[\frac{\pi}{2}\left(1^2\right)\right] - \frac{4(0.75)}{3\pi}\left[\frac{\pi}{2}\left(0.75^2\right)\right] = 0.38542 \text{ in}^3$$

Normal Stress: The normal stress is contributed by bending stress only. Thus,

$$\sigma = -\frac{M_z y}{I_z} + \frac{M_y z}{I_y}$$

For point B, $y = 0$ and $z = -1$. Then

$$\sigma_B = -0 + \frac{250(-1)}{0.53689} = -465.64 \text{ psi} = 466 \text{ psi (C)} \qquad \textbf{Ans.}$$

Shear Stress: The torsional shear stress developed at point B is

$$\left[\left(\tau_{xy}\right)_T\right]_B = \frac{T\rho_C}{J} = \frac{519.62(1)}{1.07379} = 483.91 \text{ psi}$$

The transverse shear stress developed at point B is

$$\left[\left(\tau_{xz}\right)_V\right]_B = 0$$

$$\left[\left(\tau_{xy}\right)_V\right]_B = \frac{V_y\left(Q_y\right)_B}{I_z t} = \frac{43.30(0.38542)}{0.53689(2 - 1.5)} = 62.17 \text{ psi}$$

Combining these two shear stress components,

$$\left(\tau_{xy}\right)_B = \left[\left(\tau_{xy}\right)_T\right]_B - \left[\left(\tau_{xy}\right)_V\right]_B$$

$$= 483.91 - 62.17 = 422 \text{ psi} \qquad \textbf{Ans.}$$

$$\left(\tau_{xz}\right)_B = 0 \qquad \textbf{Ans.}$$

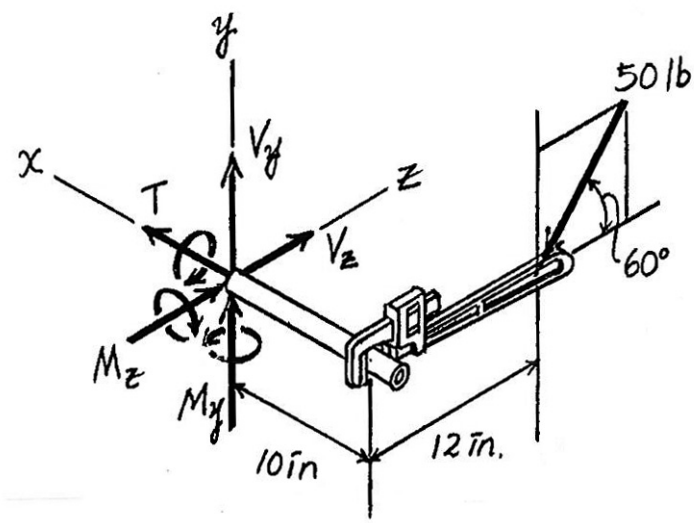

(a)

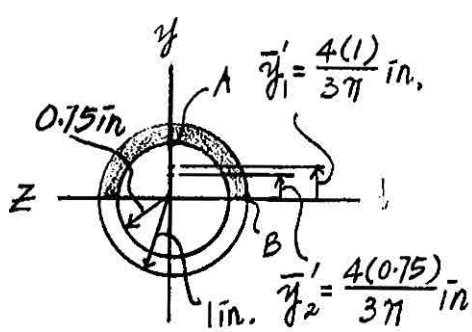

(b)

Ans:
$\sigma_B = 466$ psi (C), $\tau_B = 422$ psi

8–67. The metal link is subjected to the axial force of $P = 7$ kN. Its original cross section is to be altered by cutting a circular groove into one side. Determine the distance a the groove can penetrate into the cross section so that the tensile stress does not exceed $\sigma_{\text{allow}} = 175$ MPa. Offer a better way to remove this depth of material from the cross section and calculate the tensile stress for this case. Neglect the effects of stress concentration.

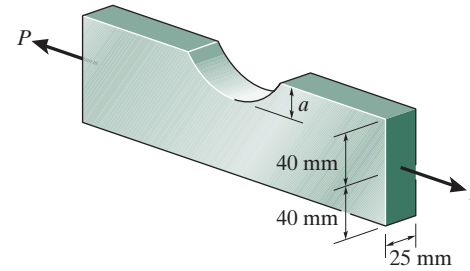

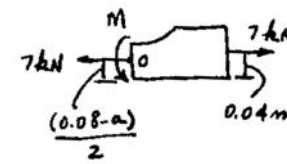

$$\circlearrowleft + \Sigma M_O = 0; \qquad M - 7(10^3)\left(0.04 - \left(\frac{0.08 - a}{2}\right)\right) = 0$$

$$M = 3.5(10^3)a$$

$$\sigma_{\max} = \frac{P}{A} + \frac{Mc}{I}$$

$$175(10^6) = \frac{7(10^3)}{(0.025)(0.08 - a)} + \frac{3.5(10^3)a(0.08 - a)/2}{\frac{1}{12}(0.025)(0.08 - a)^3}$$

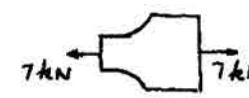

Set $x = 0.08 - a$

$$4375 = \frac{7}{x} + \frac{21(0.08 - x)}{x^2}$$

$$4375x^2 + 14x - 1.68 = 0$$

Choose positive root :

$$x = 0.01806$$

$$a = 0.08 - 0.01806 = 0.0619 \text{ m}$$

$$a = 61.9 \text{ mm}$$ **Ans.**

Remove material equally from both sides.

$$\sigma = \frac{7(10^3)}{(0.025)(0.01806)} = 15.5 \text{ MPa}$$ **Ans.**

Ans:
$a = 61.9$ mm. Remove material equally from both sides, $\sigma = 15.5$ MPa.

***8–68.** The bar has a diameter of 40 mm. If it is subjected to a force of 800 N as shown, determine the stress components that act at point A and show the results on a volume element located at this point.

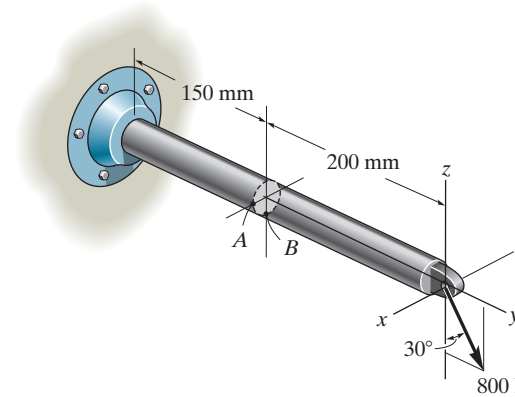

$$I = \frac{1}{4}\pi r^4 = \frac{1}{4}(\pi)(0.02^4) = 0.1256637\,(10^{-6})\,\text{m}^4$$

$$A = \pi r^2 = \pi(0.02^2) = 1.256637\,(10^{-3})\,\text{m}^2$$

$$Q_A = \bar{y}'A' = \left(\frac{4\,(0.02)}{3\pi}\right)\left(\frac{\pi\,(0.02)^2}{2}\right) = 5.3333\,(10^{-6})\,\text{m}^3$$

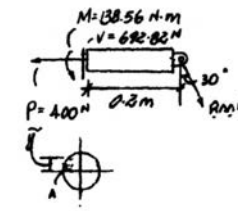

$$\sigma_A = \frac{P}{A} + \frac{Mz}{I}$$

$$= \frac{400}{1.256637\,(10^{-3})} + 0 = 0.318\ \text{MPa}$$ **Ans.**

$$\tau_A = \frac{VQ_A}{I\,t} = \frac{692.82\,(5.3333)\,(10^{-6})}{0.1256637\,(10^{-6})(0.04)} = 0.735\ \text{MPa}$$ **Ans.**

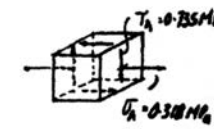

8–69. Solve Prob. 8–68 for point B.

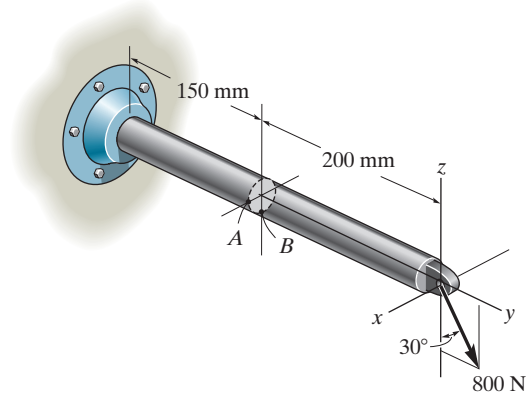

$$I = \frac{1}{4}\pi r^4 = \frac{1}{4}(\pi)(0.02^4) = 0.1256637\,(10^{-6})\,\text{m}^4$$

$$A = \pi r^2 = \pi(0.02^2) = 1.256637\,(10^{-3})\,\text{m}^2$$

$$Q_B = 0$$

$$\sigma_B = \frac{P}{A} - \frac{Mc}{I} = \frac{400}{1.256637\,(10^{-3})} - \frac{138.56\,(0.02)}{0.1256637\,(10^{-6})} = -21.7\ \text{MPa} \qquad \textbf{Ans.}$$

$$\tau_B = 0 \qquad \textbf{Ans.}$$

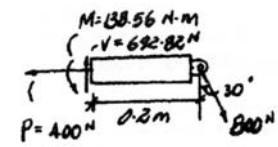

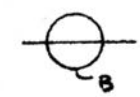

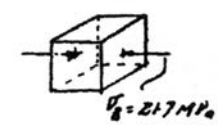

Ans:
$\sigma_B = -21.7$ MPa, $\tau_B = 0$

8–70. The $\frac{3}{4}$-in.-diameter shaft is subjected to the loading shown. Determine the stress components at point A. Sketch the results on a volume element located at this point. The journal bearing at C can exert only force components C_y and C_z on the shaft, and the thrust bearing at D can exert force components $\mathbf{D}_x$, $\mathbf{D}_y$, and $\mathbf{D}_z$ on the shaft.

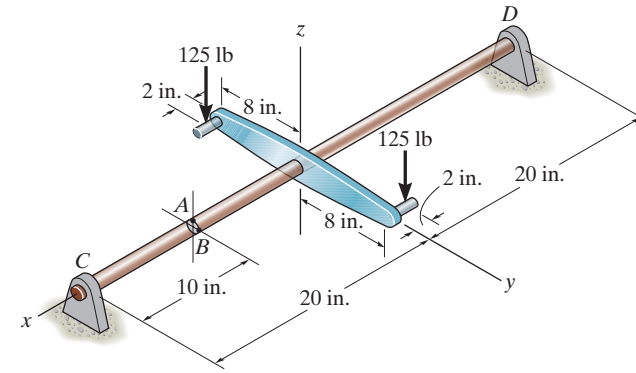

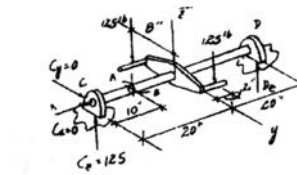

$$A = \frac{\pi}{4}(0.75^2) = 0.44179 \text{ in}^2$$

$$I = \frac{\pi}{4}(0.375^4) = 0.015531 \text{ in}^4$$

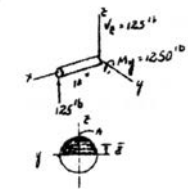

$$Q_A = 0$$

$$\tau_A = 0 \qquad \textbf{Ans.}$$

$$\sigma_A = \frac{M_y c}{I} = \frac{-1250(0.375)}{0.015531} = -30.2 \text{ ksi} = 30.2 \text{ ksi (C)} \qquad \textbf{Ans.}$$

Ans:
$\tau_A = 0, \sigma_A = 30.2$ ksi (C)

8–71. Solve Prob. 8–70 for the stress components at point B.

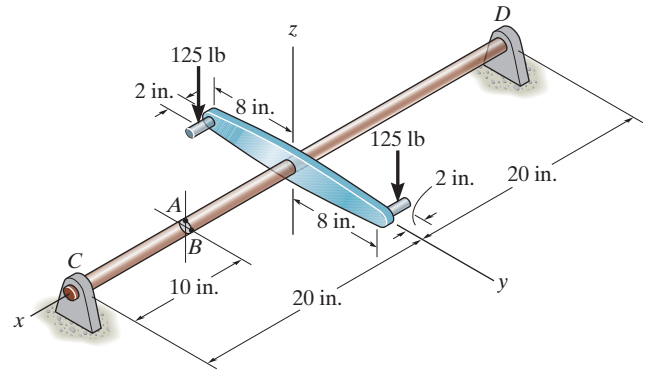

$$A = \frac{\pi}{4}(0.75^2) = 0.44179 \text{ in}^2$$

$$I = \frac{\pi}{4}(0.375^4) = 0.015531 \text{ in}^4$$

$$Q_B = y'A' = \frac{4(0.375)}{3\pi}\left(\frac{1}{2}\right)(\pi)(0.375^2) = 0.035156 \text{ in}^3$$

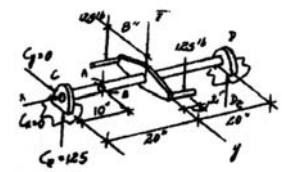

$$\sigma_B = 0$$ **Ans.**

$$\tau_B = \frac{V_z Q_B}{I\,t} = \frac{125(0.035156)}{0.015531(0.75)} = 0.377 \text{ ksi}$$ **Ans.**

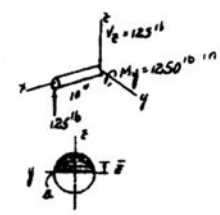

Ans:
$\sigma_B = 0, \tau_B = 0.377$ ksi

***8–72.** The hook is subjected to the force of 80 lb. Determine the state of stress at point A at section a–a. The cross section is circular and has a diameter of 0.5 in. Use the curved-beam formula to compute the bending stress.

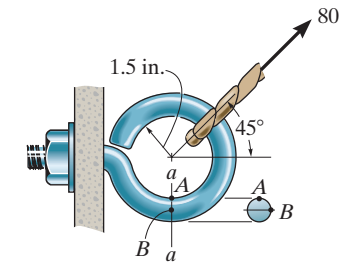

The location of the neutral surface from the center of curvature of the hook, Fig. a, can be determined from

$$R = \frac{A}{\Sigma \int_A \frac{dA}{r}}$$

where $A = \pi(0.25^2) = 0.0625\pi \text{ in}^2$

$$\Sigma \int_A \frac{dA}{r} = 2\pi\left(\bar{r} - \sqrt{\bar{r}^2 - c^2}\right) = 2\pi\left(1.75 - \sqrt{1.75^2 - 0.25^2}\right) = 0.11278 \text{ in.}$$

Thus,

$$R = \frac{0.0625\pi}{0.11278} = 1.74103 \text{ in.}$$

Then

$$e = \bar{r} - R = 1.75 - 1.74103 = 0.0089746 \text{ in.}$$

Referring to Fig. b, I and Q_A are

$$I = \frac{\pi}{4}(0.25^4) = 0.9765625(10^{-3})\pi \text{ in}^4$$

$$Q_A = 0$$

Consider the equilibrium of the FBD of the hook's cut segment, Fig. c,

$$\overset{+}{\leftarrow} \Sigma F_x = 0; \qquad N - 80\cos 45° = 0 \qquad N = 56.57 \text{ lb}$$

$$+\uparrow \Sigma F_y = 0; \qquad 80\sin 45° - V = 0 \qquad V = 56.57 \text{ lb}$$

$$\circlearrowleft + \Sigma M_o = 0; \qquad M - 80\cos 45°(1.74103) = 0 \qquad M = 98.49 \text{ lb}\cdot\text{in}$$

The normal stress developed is the combination of axial and bending stress. Thus,

$$\sigma = \frac{N}{A} + \frac{M(R - r)}{Ae\,r}$$

Here, $M = 98.49 \text{ lb}\cdot\text{in}$ since it tends to reduce the curvature of the hook. For point A, $r = 1.5$ in. Then

$$\sigma = \frac{56.57}{0.0625\pi} + \frac{(98.49)(1.74103 - 1.5)}{0.0625\pi(0.0089746)(1.5)}$$

$$= 9.269(10^3) \text{ psi} = 9.27 \text{ ksi (T)} \qquad \textbf{Ans.}$$

The shear stress in contributed by the transverse shear stress only. Thus

$$\tau = \frac{VQ_A}{It} = 0 \qquad \textbf{Ans.}$$

The state of strees of point A can be represented by the element shown in Fig. d.

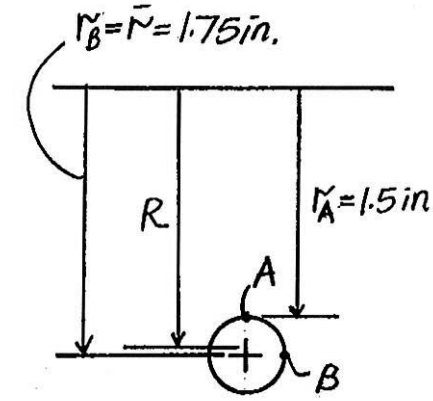

(a)

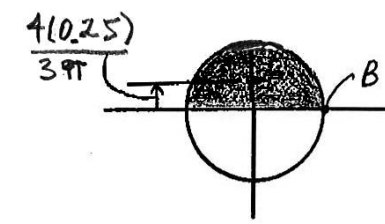

(b)

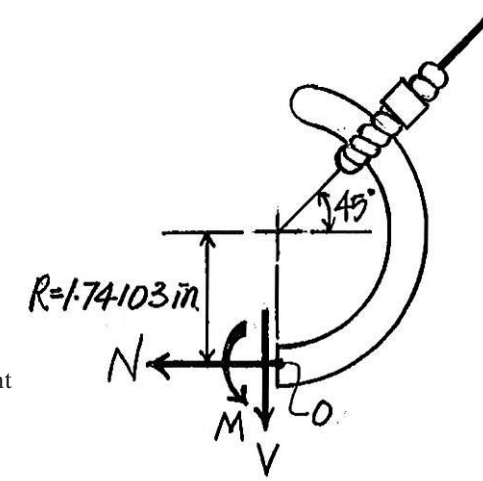

(c)

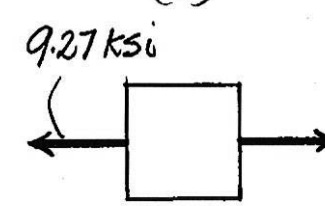

(d)

8–73. The hook is subjected to the force of 80 lb. Determine the state of stress at point B at section $a-a$. The cross section has a diameter of 0.5 in. Use the curved-beam formula to compute the bending stress.

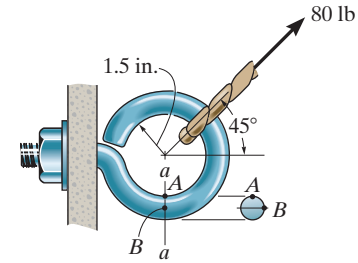

The location of the neutral surface from the center of curvature of the hook, Fig. a, can be determined from

$$R = \frac{A}{\Sigma \int_A \frac{dA}{r}}$$

Where $A = \pi(0.25^2) = 0.0625\pi \text{ in}^2$

$$\Sigma \int_A \frac{dA}{r} = 2\pi\left(\bar{r} - \sqrt{\bar{r}^2 - c^2}\right) = 2\pi\left(1.75 - \sqrt{1.75^2 - 0.25^2}\right) = 0.11278 \text{ in.}$$

Thus,

$$R = \frac{0.0625\pi}{0.11278} = 1.74103 \text{ in}$$

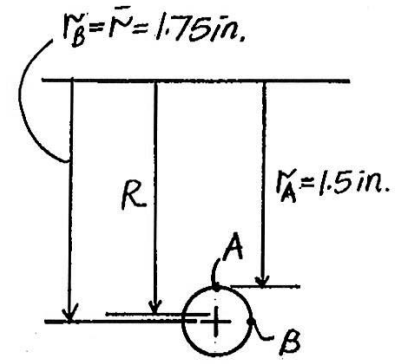

(a)

Then

$$e = \bar{r} - R = 1.75 - 1.74103 = 0.0089746 \text{ in}$$

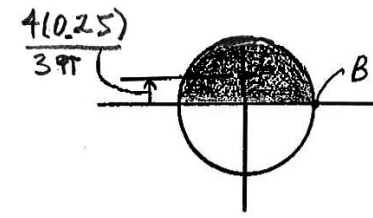

(b)

Referring to Fig. b, I and Q_B are computed as

$$I = \frac{\pi}{4}(0.25^4) = 0.9765625(10^{-3})\pi \text{ in}^4$$

$$Q_B = \bar{y}'A' = \frac{4(0.25)}{3\pi}\left[\frac{\pi}{2}(0.25^2)\right] = 0.0104167 \text{ in}^3$$

Consider the equilibrium of the FBD of the hook's cut segment, Fig. c,

$$\overset{+}{\leftarrow} \Sigma F_x = 0; \qquad N - 80\cos 45° = 0 \qquad N = 56.57 \text{ lb}$$

$$+\uparrow \Sigma F_y = 0; \qquad 80\sin 45° - V = 0 \qquad V = 56.57 \text{ lb}$$

$$\circlearrowleft + \Sigma M_o = 0; \qquad M - 80\cos 45°\,(1.74103) = 0 \qquad M = 98.49 \text{ lb}\cdot\text{in}$$

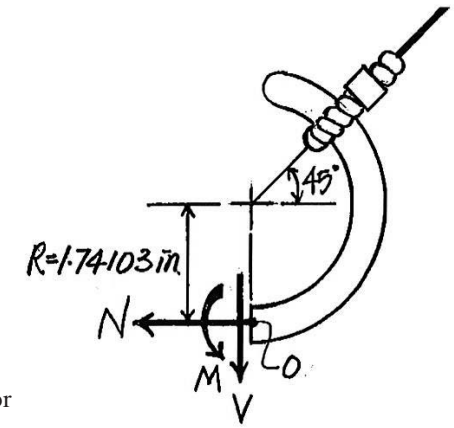

(c)

The normal stress developed is the combination of axial and bending stress. Thus,

$$\sigma = \frac{N}{A} + \frac{M(R - r)}{Aer}$$

Here, $M = 98.49 \text{ lb}\cdot\text{in}$ since it tends to reduce the curvature of the hook. For point B, $r = 1.75$ in. Then

$$\sigma = \frac{56.57}{0.0625\pi} + \frac{(98.49)(1.74103 - 1.75)}{0.0625\pi\,(0.0089746)(1.75)}$$

$$= 1.48 \text{ psi (T)} \qquad \textbf{Ans.}$$

The shear stress is contributed by the transverse shear stress only. Thus,

$$\tau = \frac{VQ_B}{It} = \frac{56.57\,(0.0104167)}{0.9765625(10^{-3})\pi\,(0.5)} = 384 \text{ psi} \qquad \textbf{Ans.}$$

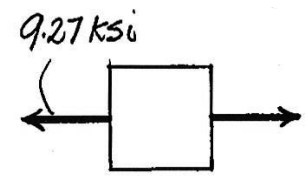

(d)

The state of stress of point B can be represented by the element shown in Fig. d.

Ans:
$\sigma = 1.48$ psi (T), $\tau = 384$ psi

8–74. The eye hook has the dimensions shown. If it supports a cable loading of 80 kN, determine the maximum normal stress at section $a-a$ and sketch the stress distribution acting over the cross section.

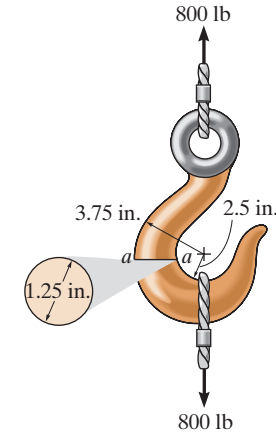

$$\int \frac{dA}{r} = 2\pi\left(3.125 - \sqrt{(3.125)^2 - (0.625)^2}\right) = 0.395707$$

$$R = \frac{A}{\int \frac{dA}{r}} = \frac{\pi(0.625)^2}{0.396707} = 3.09343 \text{ in.}$$

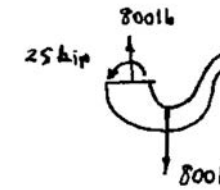

$$M = 800(3.09343) = 2.475(10^3)$$

$$\sigma = \frac{M(R - r)}{Ar(\bar{r} - R)} + \frac{P}{A}$$

$$(\sigma_t)_{\max} = \frac{2.475(10^3)(3.09343 - 2.5)}{\pi(0.625)^2(2.5)(3.125 - 3.09343)} + \frac{800}{\pi(0.625)^2} = 15.8 \text{ ksi}$$ **Ans.**

$$(\sigma_c)_{\max} = \frac{2.475(10^3)(3.09343 - 3.75)}{\pi(0.625)^2(3.75)(3.125 - 3.09343)} + \frac{800}{\pi(0.625)^2} = -10.5 \text{ ksi}$$ **Ans.**

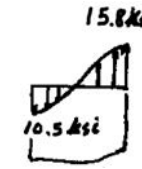

Ans:
$(\sigma_t)_{\max} = 15.8$ ksi, $(\sigma_c)_{\max} = -10.5$ ksi

8–75. The 20-kg drum is suspended from the hook mounted on the wooden frame. Determine the state of stress at point E on the cross section of the frame at section a–a. Indicate the results on an element.

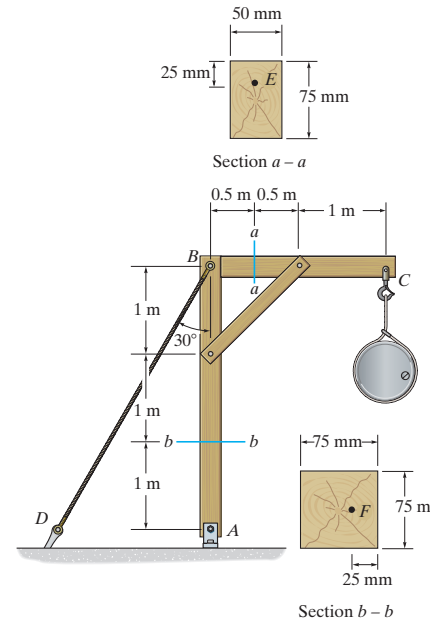

Support Reactions: Referring to the free-body diagram of member BC shown in Fig. a,

$$\circlearrowleft + \Sigma M_B = 0; \quad F\sin 45°(1) - 20(9.81)(2) = 0 \qquad F = 554.94\,\text{N}$$

$$\xrightarrow{+} \Sigma F_x = 0; \quad 554.94\cos 45° - B_x = 0 \qquad B_x = 392.4\,\text{N}$$

$$+\uparrow \Sigma F_y = 0; \quad 554.94\sin 45° - 20(9.81) - B_y = 0 \qquad B_y = 196.2\,\text{N}$$

Internal Loadings: Consider the equilibrium of the free-body diagram of the right segment shown in Fig. b.

$$\xrightarrow{+} \Sigma F_x = 0; \quad N - 392.4 = 0 \qquad N = 392.4\,\text{N}$$

$$+\uparrow \Sigma F_y = 0; \quad V - 196.2 = 0 \qquad V = 196.2\,\text{N}$$

$$\circlearrowleft + \Sigma M_C = 0; \quad 196.2(0.5) - M = 0 \qquad M = 98.1\,\text{N}\cdot\text{m}$$

Section Properties: The cross -sectional area and the moment of inertia of the cross section are

$$A = 0.05(0.075) = 3.75\left(10^{-3}\right)\text{m}^2$$

$$I = \frac{1}{12}(0.05)\left(0.075^3\right) = 1.7578\left(10^{-6}\right)\text{m}^4$$

Referring to Fig. c, Q_E is

$$Q_E = \bar{y}'A' = 0.025(0.025)(0.05) = 31.25\left(10^{-6}\right)\text{m}^3$$

Normal Stress: The normal stress is the combination of axial and bending stress. Thus,

$$\sigma = \frac{N}{A} \pm \frac{My}{I}$$

For point E, $y = 0.0375 - 0.025 = 0.0125\,\text{m}$. Then

$$\sigma_E = \frac{392.4}{3.75\left(10^{-3}\right)} + \frac{98.1(0.0125)}{1.7578\left(10^{-6}\right)} = 802\,\text{kPa} \qquad \textbf{Ans.}$$

Shear Stress: The shear stress is contributed by transverse shear stress only. Thus,

$$\tau_E = \frac{VQ_A}{It} = \frac{196.2\left[31.25\left(10^{-6}\right)\right]}{1.7578\left(10^{-6}\right)(0.05)} = 69.8\,\text{kPa} \qquad \textbf{Ans.}$$

The state of stress at point E is represented on the element shown in Fig. d.

8–75. Continued

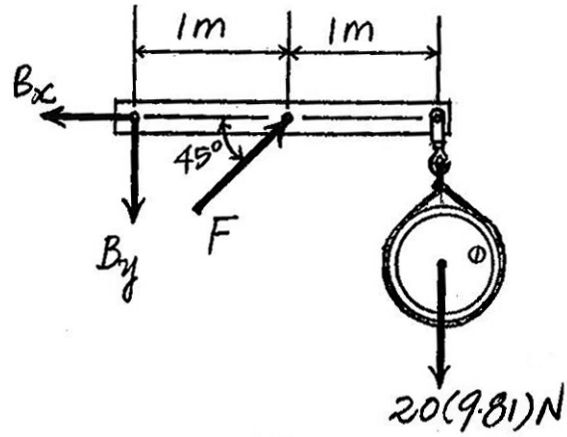

(a)

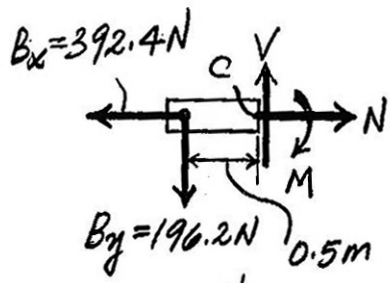

(b)

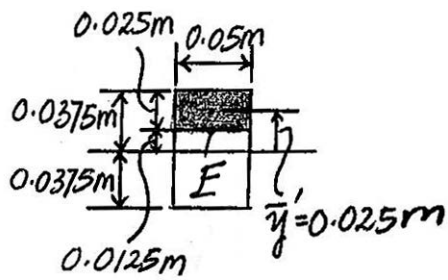

(c)

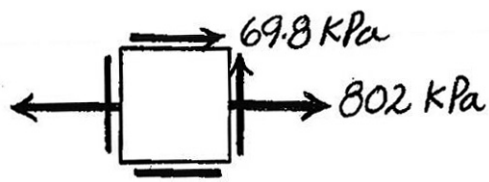

(d)

Ans:
$\sigma_E = 802$ kPa, $\tau_E = 69.8$ kPa

***8–76.** The 20-kg drum is suspended from the hook mounted on the wooden frame. Determine the state of stress at point F on the cross section of the frame at section $b-b$. Indicate the results on an element.

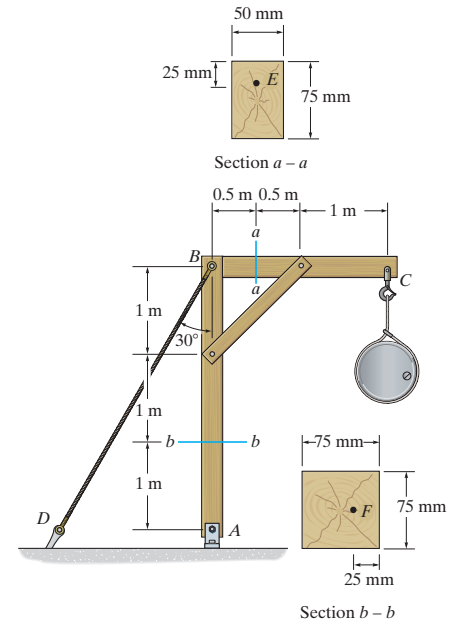

Support Reactions: Referring to the free-body diagram of the entire frame shown in Fig. a,

$$\circlearrowleft + \Sigma M_A = 0; \qquad F_{BD}\sin 30°(3) - 20(9.81)(2) = 0 \qquad F_{BD} = 261.6\,\text{N}$$

$$+\uparrow \Sigma F_y = 0; \qquad A_y - 261.6\cos 30° - 20(9.81) = 0 \qquad A_y = 422.75\,\text{N}$$

$$\xrightarrow{+} \Sigma F_x = 0; \qquad A_x - 261.6\sin 30° = 0 \qquad A_x = 130.8\,\text{N}$$

Internal Loadings: Consider the equilibrium of the free-body diagram of the lower cut segment, Fig. b,

$$\xrightarrow{+} \Sigma F_x = 0; \qquad 130.8 - V = 0 \qquad V = 130.8\,\text{N}$$

$$+\uparrow \Sigma F_y = 0; \qquad 422.75 - N = 0 \qquad N = 422.75\,\text{N}$$

$$\circlearrowleft + \Sigma M_C = 0; \qquad 130.8(1) - M = 0 \qquad M = 130.8\,\text{N}\cdot\text{m}$$

Section Properties: The cross -sectional area and the moment of inertia about the centroidal axis of the cross section are

$$A = 0.075(0.075) = 5.625\left(10^{-3}\right)\text{m}^2$$

$$I = \frac{1}{12}(0.075)\left(0.075^3\right) = 2.6367\left(10^{-6}\right)\text{m}^4$$

Referring to Fig. c, Q_E is

$$Q_F = \bar{y}'A' = 0.025(0.025)(0.075) = 46.875\left(10^{-6}\right)\text{m}^3$$

Normal Stress: The normal stress is the combination of axial and bending stress. Thus,

$$\sigma = \frac{N}{A} \pm \frac{My}{I}$$

For point F, $y = 0.0375 - 0.025 = 0.0125$ m. Then

$$\sigma_F = \frac{-422.75}{5.625\left(10^{-3}\right)} - \frac{130.8(0.0125)}{2.6367\left(10^{-6}\right)}$$

$$= -695.24\text{ kPa} = 695\text{ kPa (C)} \qquad \textbf{Ans.}$$

Shear Stress: The shear stress is contributed by transverse shear stress only. Thus,

$$\tau_A = \frac{VQ_A}{It} = \frac{130.8\left[46.875\left(10^{-6}\right)\right]}{2.6367\left(10^{-6}\right)(0.075)} = 31.0 \text{ kPa} \qquad \textbf{Ans.}$$

The state of stress at point A is represented on the element shown in Fig. d.

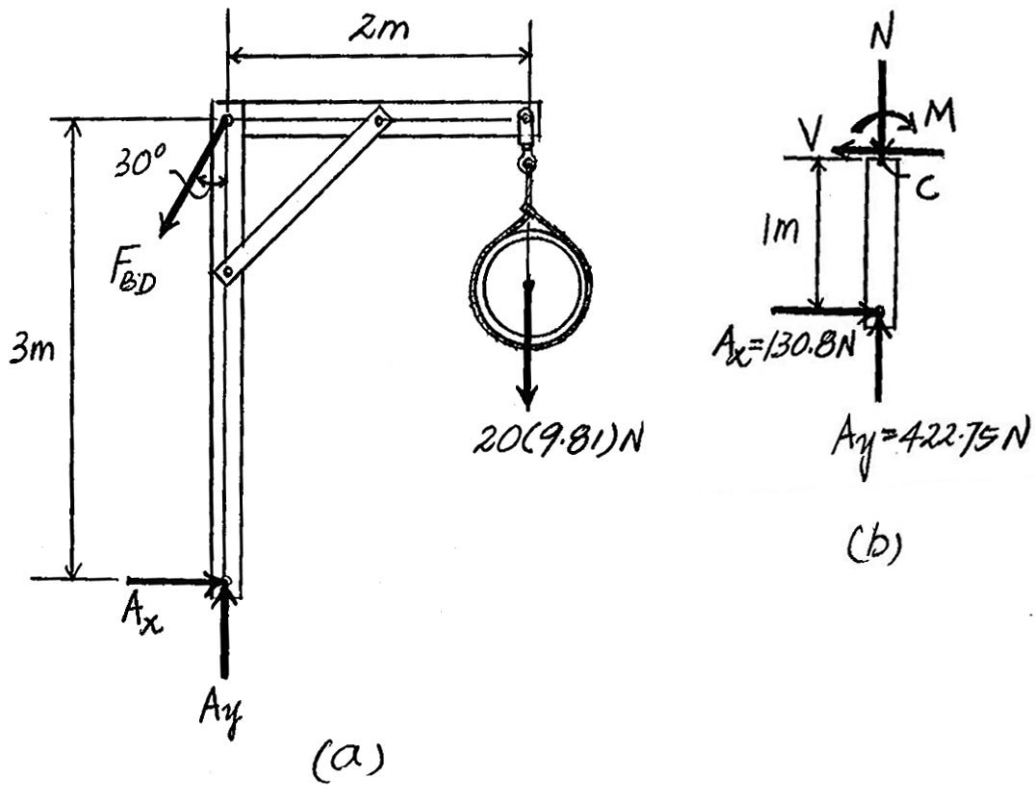

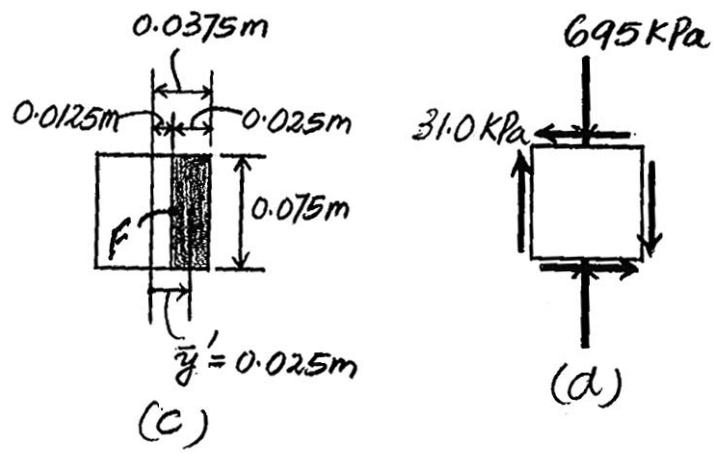

8–77. A bar having a square cross section of 30 mm by 30 mm is 2 m long and is held upward. If it has a mass of 5 kg/m, determine the largest angle θ, measured from the vertical, at which it can be supported before it is subjected to a tensile stress along its axis near the grip.

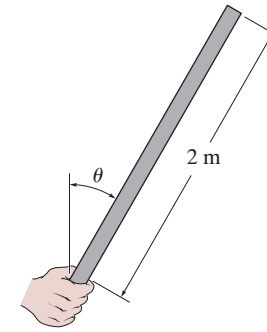

$A = 0.03(0.03) = 0.9(10^{-3})\ \text{m}^2$

$I = \frac{1}{12}(0.03)(0.03^3) = 67.5(10^{-9})\ \text{m}^4$

Require $\sigma_A = 0$

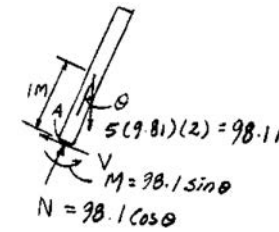

$\sigma_A = 0 = \frac{P}{A} + \frac{Mc}{I}$

$0 = \frac{-98.1\cos\theta}{0.9(10^{-3})} + \frac{98.1\sin\theta(0.015)}{67.5(10^{-9})}$

$0 = -1111.11\cos\theta + 222222.22\sin\theta$

$\tan\theta = 0.005; \qquad \theta = 0.286°$ **Ans.**

Ans:
$\theta = 0.286°$

8–78. Solve Prob. 8–77 if the bar has a circular cross section of 30-mm diameter.

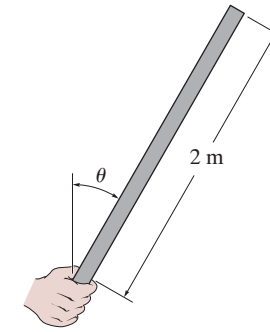

$$A = \frac{\pi}{4}(0.03^2) = 0.225\pi(10^{-3})\ \text{m}^2$$

$$I = \frac{\pi}{4}(0.015^4) = 12.65625\pi(10^{-9})\ \text{m}^4$$

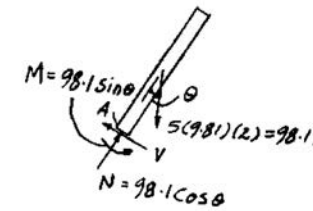

Require $\sigma_A = 0$

$$\sigma_A = 0 = \frac{P}{A} + \frac{Mc}{I}$$

$$0 = \frac{-98.1\cos\theta}{0.225\pi(10^{-3})} + \frac{98.1\sin\theta(0.015)}{12.65625\pi(10^{-9})}$$

$$0 = -4444.44\cos\theta + 1185185.185\sin\theta$$

$$\tan\theta = 0.00375$$

$$\theta = 0.215^\circ$$ **Ans.**

Ans:
$\theta = 0.215^\circ$

8–79. The gondola and passengers have a weight of 1500 lb and center of gravity at G. The suspender arm AE has a square cross-sectional area of 1.5 in. by 1.5 in., and is pin connected at its ends A and E. Determine the largest tensile stress developed in regions AB and DC of the arm.

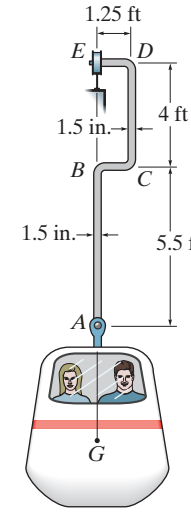

Segment AB:

$$(\sigma_{\max})_{AB} = \frac{P_{AB}}{A} = \frac{1500}{(1.5)(1.5)} = 667 \text{ psi}$$ **Ans.**

Segment CD:

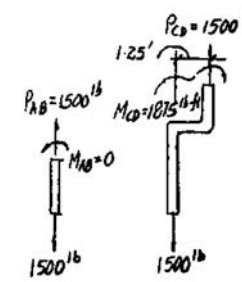

$$\sigma_a = \frac{P_{CD}}{A} = \frac{1500}{(1.5)(1.5)} = 666.67 \text{ psi}$$

$$\sigma_b = \frac{Mc}{I} = \frac{1875(12)(0.75)}{\frac{1}{12}(1.5)(1.5^3)} = 40\,000 \text{ psi}$$

$$(\sigma_{\max})_{CD} = \sigma_a + \sigma_b = 666.67 + 40\,000$$

$$= 40\,666.67 \text{ psi} = 40.7 \text{ ksi}$$ **Ans.**

Ans:
$(\sigma_{\max})_{AB} = 667$ psi, $(\sigma_{\max})_{CD} = 40.7$ ksi

***8–80.** The hydraulic cylinder is required to support a force of $P = 100$ kN. If the cylinder has an inner diameter of 100 mm and is made from a material having an allowable normal stress of $\sigma_{\text{allow}} = 150$ MPa, determine the required minimum thickness t of the wall of the cylinder.

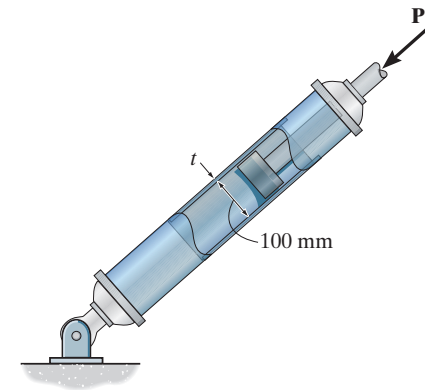

Equation of Equilibrium: The absolute pressure developed in the hydraulic cylinder can be determined by considering the equilibrium of the free-body diagram of the piston shown in Fig. *a*. The resultant force of the pressure on the piston is

$F = pA = p\left[\frac{\pi}{4}\left(0.1^2\right)\right] = 0.0025\pi p$. Thus,

$$\Sigma F_{x'} = 0; \quad 0.0025\pi p - 100\left(10^3\right) = 0$$

$$p = 12.732\left(10^6\right) \text{ Pa}$$

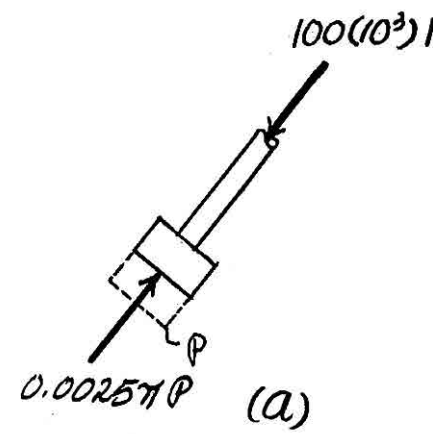

Normal Stress: For the cylinder, the hoop stress is twice as large as the longitudinal stress,

$$\sigma_{\text{allow}} = \frac{pr}{t}; \qquad 150\left(10^6\right) = \frac{12.732\left(10^6\right)(50)}{t}$$

$$t = 4.24 \text{ mm}$$ **Ans.**

Since $\frac{r}{t} = \frac{50}{4.24} = 11.78 > 10$, thin -wall analysis is valid.

8–81. The hydraulic cylinder has an inner diameter of 100 mm and wall thickness of $t = 4$ mm. If it is made from a material having an allowable normal stress of $\sigma_{\text{allow}} = 150$ MPa, determine the maximum allowable force **P**.

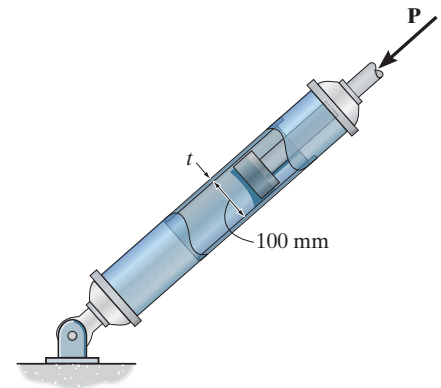

Normal Stress: For the hydraulic cylinder, the hoop stress is twice as large as the longitudinal stress.

Since $\frac{r}{t} = \frac{50}{4} = 12.5 > 10$, thin-wall analysis can be used.

$$\sigma_{\text{allow}} = \frac{pr}{t}; \qquad 150\left(10^6\right) = \frac{p(50)}{4}$$

$$p = 12\left(10^6\right) \text{ Pa}$$

Equation of Equilibrium: The resultant force on the piston is

$F = pA = 12\left(10^6\right)\left[\frac{\pi}{4}\left(0.1^2\right)\right] = 30\left(10^3\right)\pi$. Referring to the free-body diagram of the piston shown in Fig. *a*,

$$\Sigma F_{x'} = 0; \quad 30\left(10^3\right)\pi - P = 0$$

$$P = 94.247\left(10^3\right) \text{ N} = 94.2 \text{ kN} \qquad \textbf{Ans.}$$

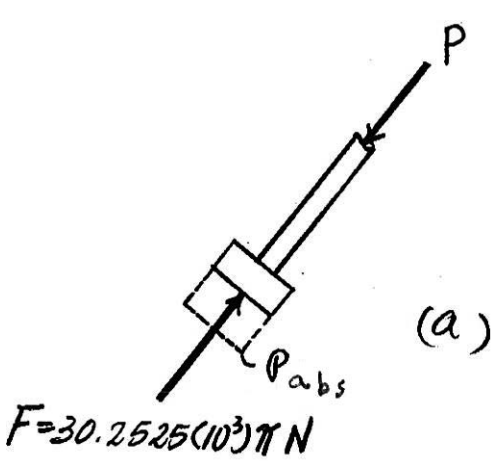

Ans:
$P = 94.2$ kN

8–82. If the cross section of the femur at section *a–a* can be approximated as a circular tube as shown, determine the maximum normal stress developed on the cross section at section *a–a* due to the load of 75 lb.

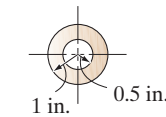

Section *a – a*

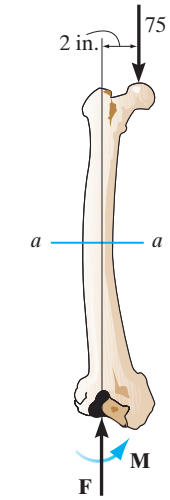

Internal Loadings: Considering the equilibrium for the free-body diagram of the femur's upper segment, Fig. *a*,

$$+\uparrow \Sigma F_y = 0; \qquad N - 75 = 0 \qquad N = 75\,\text{lb}$$

$$\circlearrowleft + \Sigma M_O = 0; \qquad M - 75(2) = 0 \qquad M = 150\,\text{lb}\cdot\text{in}$$

Section Properties: The cross-sectional area and the moment of inertia about the centroidal axis of the femur's cross section are

$$A = \pi\left(1^2 - 0.5^2\right) = 0.75\pi\ \text{in}^2$$

$$I = \frac{\pi}{4}\left(1^4 - 0.5^4\right) = 0.234375\pi\ \text{in}^4$$

Normal Stress: The normal stress is a combination of axial and bending stress. Thus,

$$\sigma = \frac{N}{A} + \frac{My}{I}$$

By inspection, the maximum normal stress is in compression.

$$\sigma_{\max} = \frac{-75}{0.75\pi} - \frac{150(1)}{0.234375\pi} = -236\ \text{psi} = 236\ \text{psi (C)} \qquad \textbf{Ans.}$$

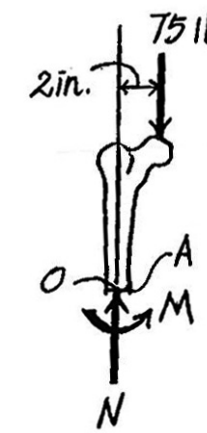

(a)

Ans:
$\sigma_{\max} = 236$ psi (C)

8–83. Air pressure in the cylinder is increased by exerting forces $P = 2$ kN on the two pistons, each having a radius of 45 mm. If the cylinder has a wall thickness of 2 mm, determine the state of stress in the wall of the cylinder.

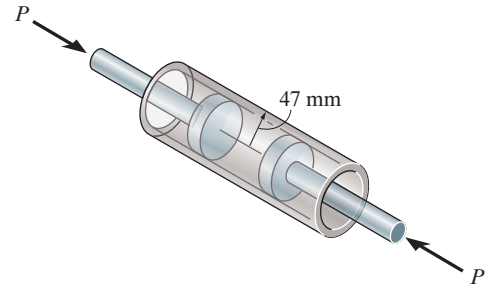

$$p = \frac{P}{A} = \frac{2(10^3)}{\pi(0.045^2)} = 314\,380.13 \text{ Pa}$$

$$\sigma_1 = \frac{p\,r}{t} = \frac{314\,380.13(0.045)}{0.002} = 7.07 \text{ MPa}$$ **Ans.**

$$\sigma_2 = 0$$ **Ans.**

The pressure P is supported by the surface of the pistons in the longitudinal direction.

Ans:
$\sigma_1 = 7.07$ MPa, $\sigma_2 = 0$

***8–84.** Determine the maximum force P that can be exerted on each of the two pistons so that the circumferential stress component in the cylinder does not exceed 3 MPa. Each piston has a radius of 45 mm and the cylinder has a wall thickness of 2 mm.

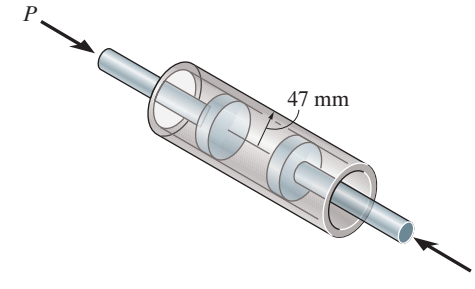

$$\sigma = \frac{p\,r}{t}; \qquad 3(10^6) = \frac{p(0.045)}{0.002}$$

$$P = 133.3 \text{ kPa}$$ **Ans.**

$$P = pA = 133.3\left(10^3\right)(\pi)(0.045)^2 = 848 \text{ N}$$ **Ans.**

8–85. The wall hanger has a thickness of 0.25 in. and is used to support the vertical reactions of the beam that is loaded as shown. If the load is transferred uniformly to each strap of the hanger, determine the state of stress at points C and D on the strap at A. Assume the vertical reaction **F** at this end acts in the center and on the edge of the bracket as shown.

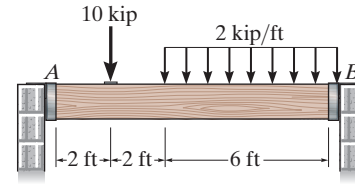

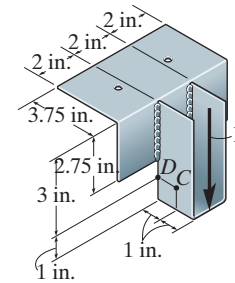

$$\circlearrowleft + \Sigma M_B = 0; \qquad 12(3) + 10(8) - F_A(10) = 0$$

$$F_A = 11.60 \text{ kip}$$

$$I = 2\left[\frac{1}{12}(0.25)(2)^3\right] = 0.333 \text{ in}^4$$

$$A = 2(0.25)(2) = 1 \text{ in}^2$$

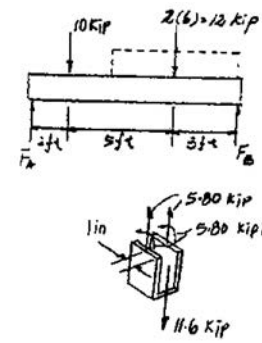

At point C,

$$\sigma_C = \frac{P}{A} = \frac{2(5.80)}{1} = 11.6 \text{ ksi} \qquad \textbf{Ans.}$$

$$\tau_C = 0 \qquad \textbf{Ans.}$$

At point D,

$$\sigma_D = \frac{P}{A} - \frac{Mc}{I} = \frac{2(5.80)}{1} - \frac{[2(5.80)](1)}{0.333} = -23.2 \text{ ksi} \qquad \textbf{Ans.}$$

$$\tau_D = 0 \qquad \textbf{Ans.}$$

Ans:
$\sigma_C = 11.6$ ksi, $\tau_C = 0$,
$\sigma_D = -23.2$ ksi, $\tau_D = 0$

8–86. The wall hanger has a thickness of 0.25 in. and is used to support the vertical reactions of the beam that is loaded as shown. If the load is transferred uniformly to each strap of the hanger, determine the state of stress at points C and D on the strap at B. Assume the vertical reaction **F** at this end acts in the center and on the edge of the bracket as shown.

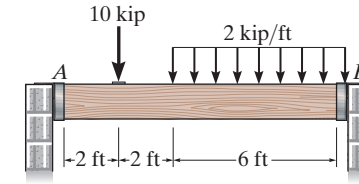

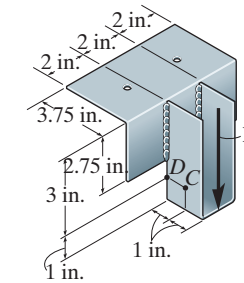

$$\circlearrowleft + \Sigma M_A = 0; \quad F_B(10) - 10(2) - 12(7) = 0; \quad F_B = 10.40 \text{ kip}$$

$$I = 2\left[\frac{1}{12}(0.25)(2)^3\right] = 0.333 \text{ in}^4; \quad A = 2(0.25)(2) = 1 \text{ in}^2$$

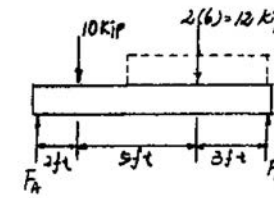

At point C:

$$\sigma_C = \frac{P}{A} = \frac{2(5.20)}{1} = 10.4 \text{ ksi} \qquad \textbf{Ans.}$$

$$\tau_C = 0 \qquad \textbf{Ans.}$$

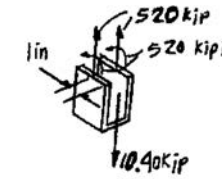

At point D:

$$\sigma_D = \frac{P}{A} - \frac{Mc}{I} = \frac{2(5.20)}{1} - \frac{[2(5.20)](1)}{0.333} = -20.8 \text{ ksi} \qquad \textbf{Ans.}$$

$$\tau_D = 0 \qquad \textbf{Ans.}$$

Ans:
$\sigma_C = 10.4$ ksi, $\tau_C = 0$,
$\sigma_D = -20.8$ ksi, $\tau_D = 0$

9–1. Prove that the sum of the normal stresses $\sigma_x + \sigma_y = \sigma_{x'} + \sigma_{y'}$ is constant. See Figs. 9–2*a* and 9–2*b*.

Stress Transformation Equations: Applying Eqs. 9–1 and 9–3 of the text.

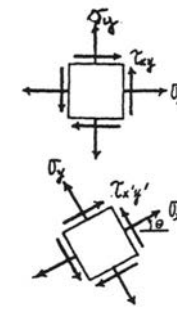

$$\sigma_{x'} + \sigma_{y'} = \frac{\sigma_x + \sigma_y}{2} + \frac{\sigma_x - \sigma_y}{2}\cos 2\theta + \tau_{xy}\sin 2\theta$$
$$+ \frac{\sigma_x + \sigma_y}{2} - \frac{\sigma_x - \sigma_y}{2}\cos 2\theta - \tau_{xy}\sin 2\theta$$

$$\sigma_{x'} + \sigma_{y'} = \sigma_x + \sigma_y \qquad \textbf{(Q. E. D.)}$$

9–2. The state of stress at a point in a member is shown on the element. Determine the stress components acting on the inclined plane AB. Solve the problem using the method of equilibrium described in Sec. 9.1.

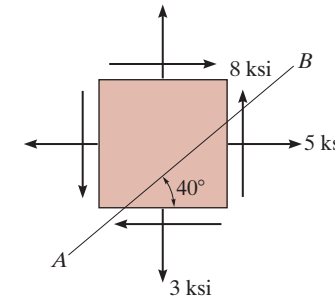

$$\nwarrow^{+}\Sigma F_{x'} = 0 \quad \Delta F_{x'} + (8\Delta A \sin 40°)\cos 40° - (5\Delta A \sin 40°)\cos 50° - (3\Delta A \cos 40°)\cos 40° + (8\Delta A \cos 40°)\cos 50° = 0$$

$$\Delta F_{x'} = -4.052\Delta A$$

$$\swarrow+\Sigma F_{y'} = 0 \quad \Delta F_{y'} - (8\Delta A \sin 40°)\sin 40° - (5\Delta A \sin 40°)\sin 50° + (3\Delta A \cos 40°)\sin 40° + (8\Delta A \cos 40°)\sin 50° = 0$$

$$\Delta F_{y'} = -0.4044\Delta A$$

$$\sigma_{x'} = \lim_{\Delta A \to 0}\frac{\Delta F_{x'}}{\Delta A} = -4.05 \text{ ksi}$$ **Ans.**

$$\tau_{x'y'} = \lim_{\Delta A \to 0}\frac{\Delta F_{y'}}{\Delta A} = -0.404 \text{ ksi}$$ **Ans.**

The negative signs indicate that the senses of $\sigma_{x'}$ and $\tau_{x'y'}$ are opposite to that shown on FBD.

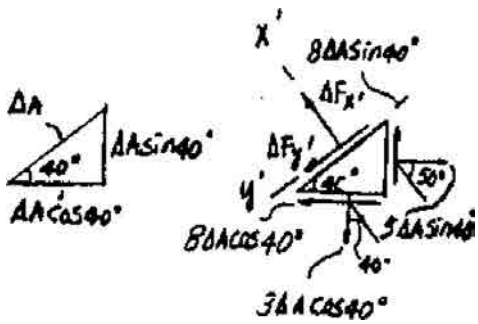

Ans:
$\sigma_{x'} = -4.05$ ksi, $\tau_{x'y'} = -0.404$ ksi

9–3. The state of stress at a point in a member is shown on the element. Determine the stress components acting on the inclined plane AB. Solve the problem using the method of equilibrium described in Sec. 9.1.

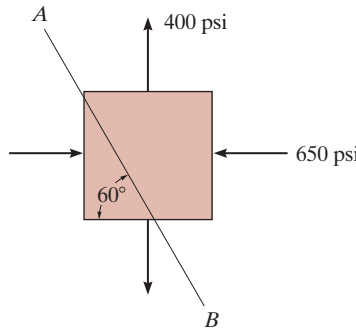

$$\nearrow + \Sigma F_{x'} = 0 \qquad \Delta F_{x'} - 400(\Delta A \cos 60°) \cos 60° + 650(\Delta A \sin 60°) \cos 30° = 0$$

$$\Delta F_{x'} = -387.5 \Delta A$$

$$\nwarrow + \Sigma F_{y'} = 0 \qquad \Delta F_{y'} - 650(\Delta A \sin 60°) \sin 30° - 400(\Delta A \cos 60°) \sin 60° = 0$$

$$\Delta F_{y'} = 455\ \Delta A$$

$$\sigma_{x'} = \lim_{\Delta A \to 0} \frac{\Delta F_{x'}}{\Delta A} = -388 \text{ psi} \qquad \textbf{Ans.}$$

$$\tau_{x'y'} = \lim_{\Delta A \to 0} \frac{\Delta F_{y'}}{\Delta A} = 455 \text{ psi} \qquad \textbf{Ans.}$$

The negative sign indicates that the sense of $\sigma_{x'}$ is opposite to that shown on FBD.

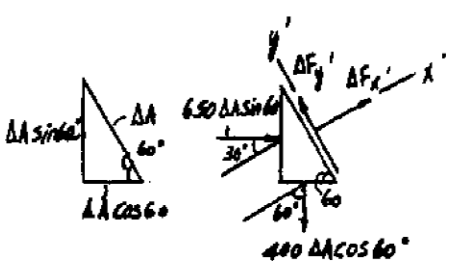

Ans:
$\sigma_{x'} = -388$ psi, $\tau_{x'y'} = 455$ psi

***9–4.** Determine the normal stress and shear stress acting on the inclined plane AB. Solve the problem using the method of equilibrium described in Sec. 9.1.

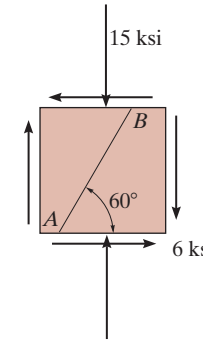

Force Equilibrium: Referring to Fig. *a*, if we assume that the area of the inclined plane AB is ΔA, then the area of the vertical and horizontal faces of the triangular sectioned element are $\Delta A \sin 60°$ and $\Delta A \cos 60°$, respectively. The forces acting on the free-body diagram of the triangular sectioned element, Fig. *b*, are

$$\Sigma F_{x'} = 0; \qquad \Delta F_{x'} - (6\Delta A \sin 60°)\cos 60° - (6\Delta A \cos 60°)\sin 60° + (15\Delta A \cos 60°)\cos 60° = 0$$

$$\Delta F_{x'} = 1.4461\Delta A$$

$$\Sigma F_{y'} = 0; \qquad \Delta F_{y'} + (6\Delta A \sin 60°)\sin 60° - (6\Delta A \cos 60°)\cos 60° - (15\Delta A \cos 60°)\sin 60° = 0$$

$$\Delta F_{y'} = 3.4952\Delta A$$

Normal and Shear Stress: From the definition of normal and shear stress,

$$\sigma_{x'} = \lim_{\Delta A \to 0} \frac{\Delta F_{x'}}{\Delta A} = 1.45 \text{ ksi} \qquad \textbf{Ans.}$$

$$\tau_{x'y'} = \lim_{\Delta A \to 0} \frac{\Delta F_{y'}}{\Delta A} = 3.50 \text{ ksi} \qquad \textbf{Ans.}$$

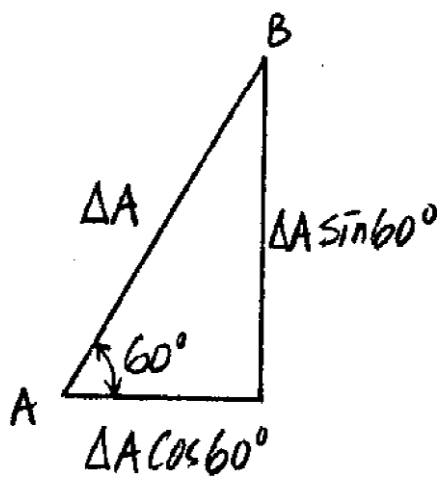

(a)

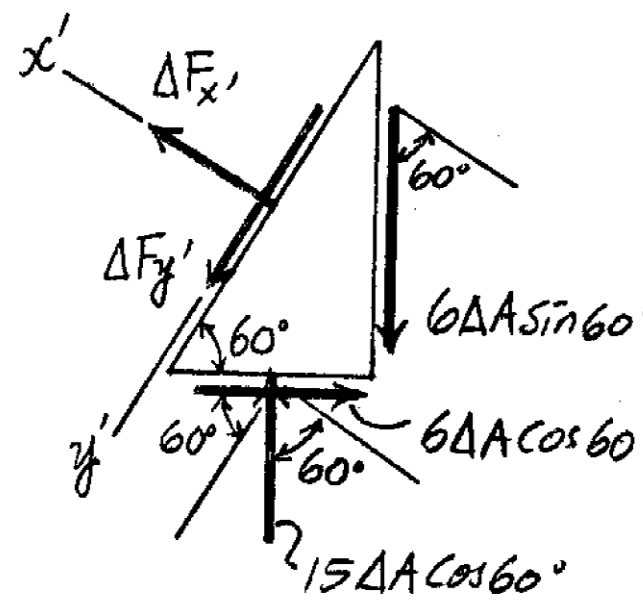

(b)

9–5. Determine the normal stress and shear stress acting on the inclined plane AB. Solve the problem using the stress transformation equations. Show the results on the sectional element.

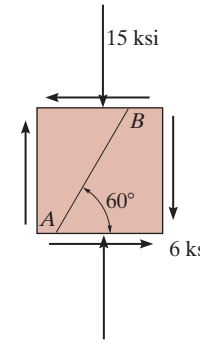

Stress Transformation Equations:

$\theta = +150°$ (Fig. a) $\qquad \sigma_x = 0 \qquad \sigma_y = -15$ ksi $\qquad \tau_{xy} = -6$ ksi

We obtain,

$$\sigma_{x'} = \frac{\sigma_x + \sigma_y}{2} + \frac{\sigma_x - \sigma_y}{2}\cos 2\theta + \tau_{xy}\sin 2\theta$$

$$= \frac{0 + (-15)}{2} + \frac{0 - (-15)}{2}\cos 300° + (-6)\sin 300°$$

$$= 1.45 \text{ ksi} \qquad \textbf{Ans.}$$

$$\tau_{x'y'} = -\frac{\sigma_x - \sigma_y}{2}\sin 2\theta + \tau_{xy}\cos 2\theta$$

$$= -\frac{0 - (-15)}{2}\sin 300° + (-6)\cos 300°$$

$$= 3.50 \text{ ksi} \qquad \textbf{Ans.}$$

The results are indicated on the triangular sectioned element shown in Fig. b.

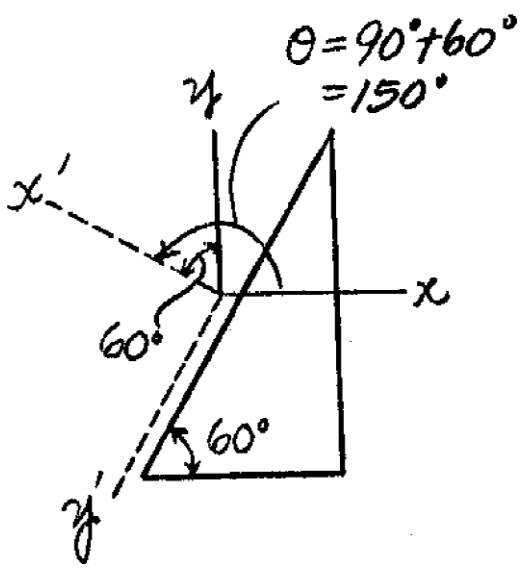

(a)

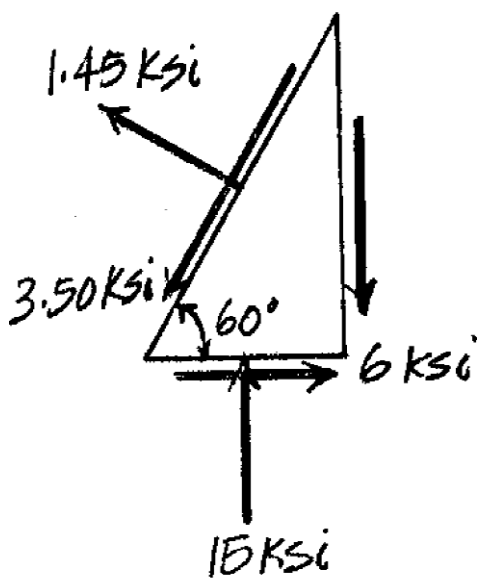

(b)

Ans:
$\sigma_{x'} = 1.45$ ksi, $\tau_{x'y'} = 3.50$ ksi

9–6. Determine the normal stress and shear stress acting on the inclined plane AB. Solve the problem using the method of equilibrium described in Sec. 9.1.

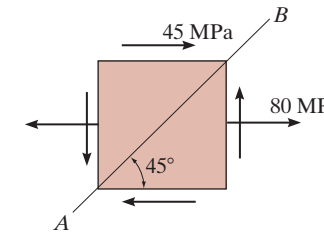

Force Equllibrium: Referring to Fig. *a*, if we assume that the area of the inclined plane AB is ΔA, then the area of the vertical and horizontal faces of the triangular sectioned element are $\Delta A \sin 45°$ and $\Delta A \cos 45°$, respectively. The forces acting on the free-body diagram of the triangular sectioned element, Fig. *b*, are

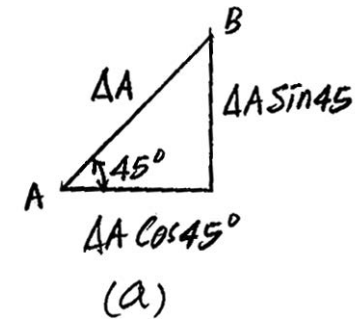

$$\Sigma F_{x'} = 0; \quad \Delta F_{x'} + \left[45\left(10^6\right)\Delta A \sin 45°\right]\cos 45° + \left[45\left(10^6\right)\Delta A \cos 45°\right]\sin 45°$$
$$-\left[80\left(10^6\right)\Delta A \sin 45°\right]\cos 45° = 0$$
$$\Delta F_{x'} = -5\left(10^6\right)\Delta A$$
$$\Sigma F_{y'} = 0; \quad \Delta F_{y'} + \left[45\left(10^6\right)\Delta A \cos 45°\right]\cos 45° - \left[45\left(10^6\right)\Delta A \sin 45°\right]\sin 45°$$
$$-\left[80\left(10^6\right)\Delta A \sin 45°\right]\sin 45° = 0$$
$$\Delta F_{y'} = 40\left(10^6\right)\Delta A$$

Normal and Shear Stress: From the definition of normal and shear stress,

$$\sigma_{x'} = \lim_{\Delta A \to 0} \frac{\Delta F_{x'}}{\Delta A} = -5 \text{ MPa} \qquad \textbf{Ans.}$$

$$\tau_{x'y'} = \lim_{\Delta A \to 0} \frac{\Delta F_{y'}}{\Delta A} = 40 \text{ MPa} \qquad \textbf{Ans.}$$

The negative sign indicates that $\sigma_{x'}$ is a compressive stress.

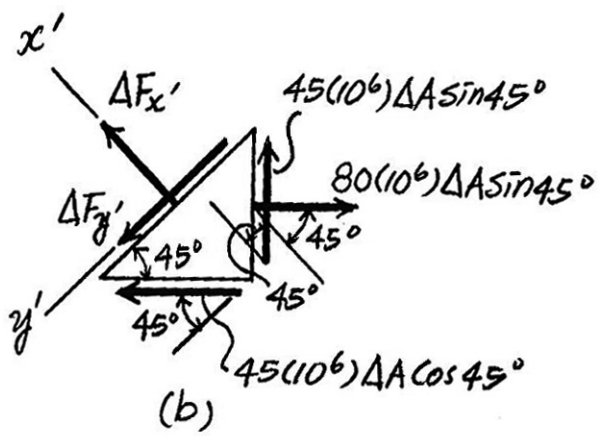

Ans:
$\sigma_{x'} = -5$ MPa, $\tau_{x'y'} = 40$ MPa

9–7. Determine the normal stress and shear stress acting on the inclined plane AB. Solve the problem using the stress transformation equations. Show the result on the sectioned element.

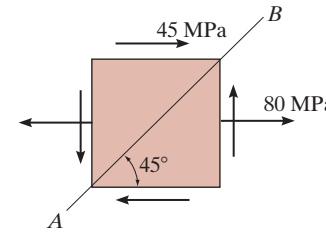

Stress Transformation Equations:

$\theta = +135°$ (Fig. a) $\qquad \sigma_x = 80$ MPa $\qquad \sigma_y = 0 \qquad \tau_{xy} = 45$ MPa

we obtain,

$$\sigma_{x'} = \frac{\sigma_x + \sigma_y}{2} + \frac{\sigma_x - \sigma_y}{2}\cos\theta + \tau_{xy}\sin 2\theta$$

$$= \frac{80 + 0}{2} + \frac{80 - 0}{2}\cos 270 + 45\sin 270°$$

$$= -5 \text{ MPa} \qquad \textbf{Ans.}$$

$$\tau_{x'y'} = -\frac{\sigma_x - \sigma_y}{2}\sin\theta + \tau_{xy}\cos 2\theta$$

$$= -\frac{80 - 0}{2}\sin 270° + 45\cos 270°$$

$$= 40 \text{ MPa} \qquad \textbf{Ans.}$$

The negative sign indicates that $\sigma_{x'}$ is a compressive stress. These results are indicated on the triangular element shown in Fig. b.

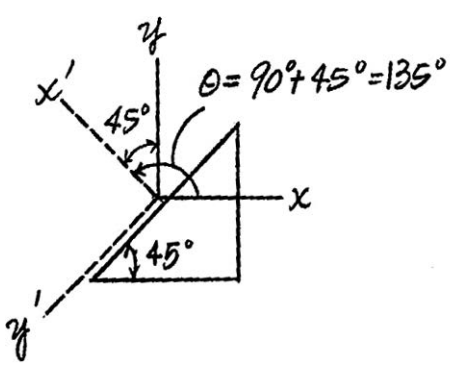

(a)

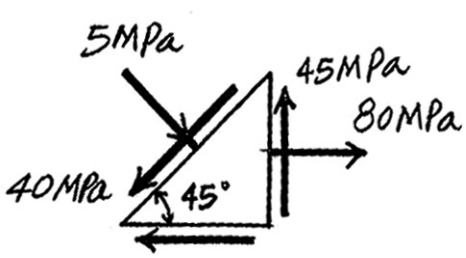

(b)

Ans:
$\sigma_{x'} = -5$ MPa, $\tau_{x'y'} = 40$ MPa

***9–8.** Determine the equivalent state of stress on an element at the same point oriented 30° clockwise with respect to the element shown. Sketch the results on the element.

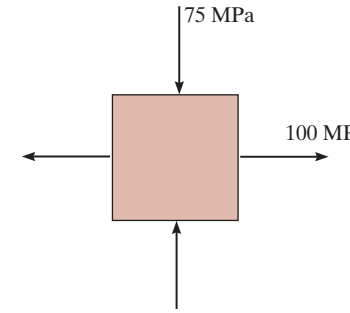

Stress Transformation Equations:

$$\theta = -30° \text{ (Fig. } a) \qquad \sigma_x = 100 \text{ MPa} \qquad \sigma_y = -75 \text{ MPa} \qquad \tau_{xy} = 0$$

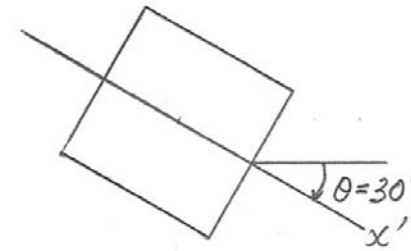

(a)

We obtain,

$$\sigma_{x'} = \frac{\sigma_x + \sigma_y}{2} + \frac{\sigma_x - \sigma_y}{2}\cos 2\theta + \tau_{xy}\sin 2\theta$$

$$= \frac{100 + (-75)}{2} + \frac{100 - (-75)}{2}\cos(-60°) + 0\sin(-60°)$$

$$= 56.25 \text{ MPa} \qquad \textbf{Ans.}$$

$$\sigma_{y'} = \frac{\sigma_x + \sigma_y}{2} - \frac{\sigma_x - \sigma_y}{2}\cos 2\theta - \tau_{xy}\sin 2\theta$$

$$= \frac{100 + (-75)}{2} - \frac{100 - (-75)}{2}\cos(-60°) - 0\sin(-60°)$$

$$= -31.25 \text{ MPa} \qquad \textbf{Ans.}$$

$$\tau_{x'y'} = -\frac{\sigma_x - \sigma_y}{2}\sin 2\theta + \tau_{xy}\cos 2\theta$$

$$= -\frac{100 - (-75)}{2}\sin(-60°) + 0\cos(-60°)$$

$$= 75.8 \text{ MPa} \qquad \textbf{Ans.}$$

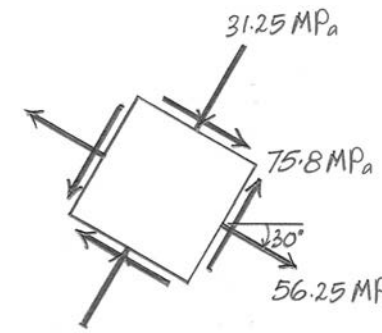

(b)

The negative sign indicates that $\sigma_{y'}$ is a compressive stress. These results are indicated on the element shown in Fig. *b*.

9–9. Determine the equivalent state of stress on an element at the same point oriented 30° counterclockwise with respect to the element shown. Sketch the results on the element.

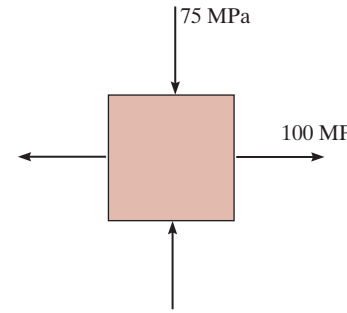

Stress Transformation Equations:

$\theta = +30°$ (Fig. *a*) $\qquad \sigma_x = 100$ MPa $\qquad \sigma_y = -75$ MPa

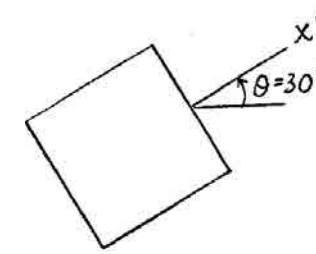

(a)

We obtain,

$$\sigma_{x'} = \frac{\sigma_x + \sigma_y}{2} + \frac{\sigma_x - \sigma_y}{2}\cos 2\theta + \tau_{xy}\sin 2\theta$$

$$= \frac{100 + (-75)}{2} + \frac{100 - (-75)}{2}\cos 60° + 0 \sin 60°$$

$$= 56.25 \text{ MPa} \qquad \textbf{Ans.}$$

$$\sigma_{y'} = \frac{\sigma_x + \sigma_y}{2} - \frac{\sigma_x - \sigma_y}{2}\cos 2\theta - \tau_{xy}\sin 2\theta$$

$$= \frac{100 + (-75)}{2} - \frac{100 - (-75)}{2}\cos 60° - 0 \sin 60°$$

$$= -31.25 \text{ MPa} \qquad \textbf{Ans.}$$

$$\tau_{x'y'} = -\frac{\sigma_x - \sigma_y}{2}\sin 2\theta + \tau_{xy}\cos 2\theta$$

$$= -\frac{100 - (-75)}{2}\sin 60° + 0 \cos 60°$$

$$= -75.8 \text{ MPa} \qquad \textbf{Ans.}$$

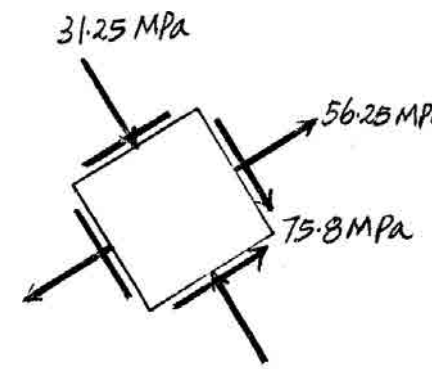

(b)

The negative signs indicate that $\sigma_{y'}$ is a compressive stress $\tau_{x'y'}$ is directed towards the negative sense of the y' axis. These results are indicated on the element shown in Fig. *b*.

Ans:
$\sigma_{x'} = 56.25$ MPa, $\sigma_{y'} = -31.25$ MPa,
$\tau_{x'y'} = -75.8$ MPa

9–10. Determine the equivalent state of stress on an element at the same point oriented 60° clockwise with respect to the element shown. Sketch the results on the element.

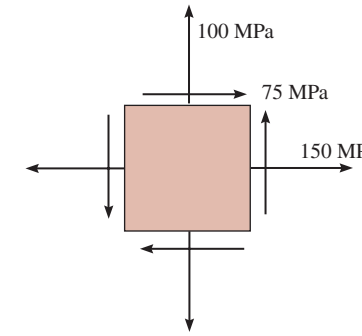

Stress Transformation Equations:

$$\theta = -60^\circ \text{ (Fig. } a\text{)} \qquad \sigma_x = 150 \text{ MPa} \qquad \sigma_y = 100 \text{ MPa} \qquad \tau_{xy} = 75 \text{ MPa}$$

We obtain,

$$\sigma_{x'} = \frac{\sigma_x + \sigma_y}{2} + \frac{\sigma_x - \sigma_y}{2} \cos 2\theta + \tau_{xy} \sin 2\theta$$

$$= \frac{150 + 100}{2} + \frac{150 - 100}{2} \cos(-120^\circ) + 75 \sin(-120^\circ)$$

$$= 47.5 \text{ MPa} \qquad \textbf{Ans.}$$

$$\sigma_{y'} = \frac{\sigma_x + \sigma_y}{2} - \frac{\sigma_x - \sigma_y}{2} \cos 2\theta - \tau_{xy} \sin 2\theta$$

$$= \frac{150 + 100}{2} - \frac{150 - 100}{2} \cos(-120^\circ) - 75 \sin(-120^\circ)$$

$$= 202 \text{ MPa} \qquad \textbf{Ans.}$$

$$\tau_{x'y'} = -\frac{\sigma_x - \sigma_y}{2} \sin 2\theta + \tau_{xy} \cos 2\theta$$

$$= -\frac{150 - 100}{2} \sin(-120^\circ) + 75 \cos(-120^\circ)$$

$$= -15.8 \text{ MPa} \qquad \textbf{Ans.}$$

The negative sign indicates that $\tau_{x'y'}$ is directed towards the negative sense of the y' axis. These results are indicated on the element shown in Fig. b.

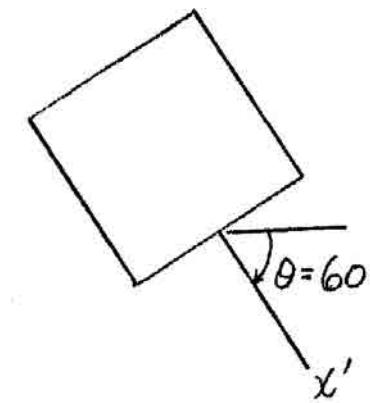

(a)

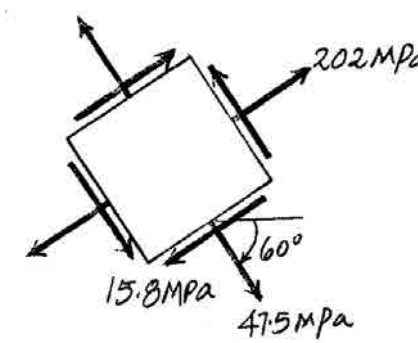

(b)

Ans:
$\sigma_{x'} = 47.5$ MPa, $\sigma_{y'} = 202$ MPa,
$\tau_{x'y'} = -15.8$ MPa

9–11. Determine the equivalent state of stress on an element at the same point oriented 60° counterclockwise with respect to the element shown. Sketch the results on the element.

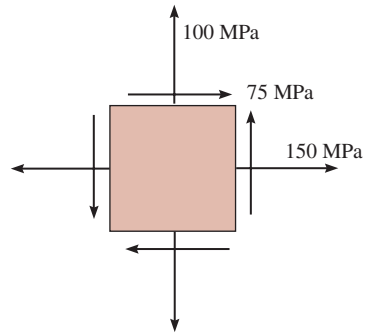

Stress Transformation Equations:

$\theta = +60°$ (Fig. a) $\quad \sigma_x = 150$ MPa $\quad \sigma_y = 100$ MPa $\quad \tau_{xy} = 75$ MPa

We obtain,

$$\sigma_{x'} = \frac{\sigma_x + \sigma_y}{2} + \frac{\sigma_x - \sigma_y}{2}\cos 2\theta + \tau_{xy}\sin 2\theta$$

$$= \frac{150 + 100}{2} + \frac{150 - 100}{2}\cos 120° + 75\sin 120°$$

$$= 177 \text{ MPa} \qquad \textbf{Ans.}$$

$$\sigma_{y'} = \frac{\sigma_x + \sigma_y}{2} - \frac{\sigma_x - \sigma_y}{2}\cos 2\theta - \tau_{xy}\sin 2\theta$$

$$= \frac{150 + 100}{2} - \frac{150 - 100}{2}\cos 120° - 75\sin 120°$$

$$= 72.5 \text{ MPa} \qquad \textbf{Ans.}$$

$$\tau_{x'y'} = -\frac{\sigma_x - \sigma_y}{2}\sin 2\theta + \tau_{xy}\cos 2\theta$$

$$= -\frac{150 - 100}{2}\sin 120° + 75\cos 120°$$

$$= -59.2 \text{ MPa} \qquad \textbf{Ans.}$$

The negative sign indicates that $\tau_{x'y'}$ is directed towards the negative sense of the y' axis. These results are indicated on the element shown in Fig. b.

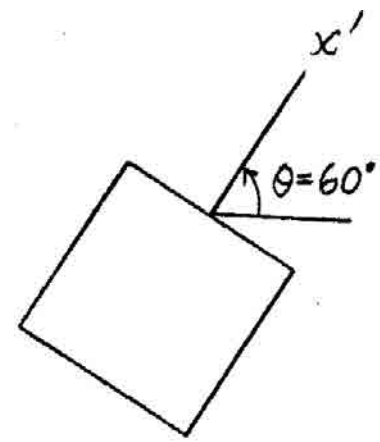

(a)

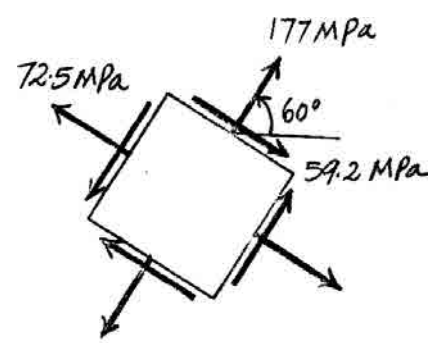

(b)

Ans:
$\sigma_{x'} = 177$ MPa, $\sigma_{y'} = 72.5$ MPa,
$\tau_{x'y'} = -59.2$ MPa

***9–12.** Determine the equivalent state of stress on an element if it is oriented 50° counterclockwise from the element shown. Use the stress-transformation equations.

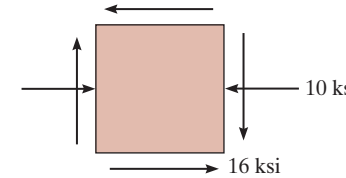

$\sigma_x = -10 \text{ ksi} \qquad \sigma_y = 0 \qquad \tau_{xy} = -16 \text{ ksi}$

$\theta = +50°$

$$\sigma_{x'} = \frac{\sigma_x + \sigma_y}{2} + \frac{\sigma_x - \sigma_y}{2}\cos 2\theta + \tau_{xy}\sin 2\theta$$

$$= \frac{-10 + 0}{2} + \frac{-10 - 0}{2}\cos 100° + (-16)\sin 100° = -19.9 \text{ ksi} \qquad \textbf{Ans.}$$

$$\tau_{x'y'} = -\left(\frac{\sigma_x - \sigma_y}{2}\right)\sin 2\theta + \tau_{xy}\cos 2\theta$$

$$= -\left(\frac{-10 - 0}{2}\right)\sin 100° + (-16)\cos 100° = 7.70 \text{ ksi} \qquad \textbf{Ans.}$$

$$\sigma_{y'} = \frac{\sigma_x + \sigma_y}{2} - \frac{\sigma_x - \sigma_y}{2}\cos 2\theta - \tau_{xy}\sin 2\theta$$

$$= \frac{-10 + 0}{2} - \left(\frac{-10 - 0}{2}\right)\cos 100° - (-16)\sin 100° = 9.89 \text{ ksi} \qquad \textbf{Ans.}$$

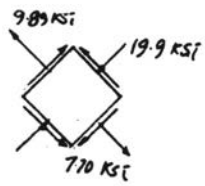

9–13. Determine the equivalent state of stress on an element if it is oriented 30° clockwise from the element shown. Use the stress-transformation equations.

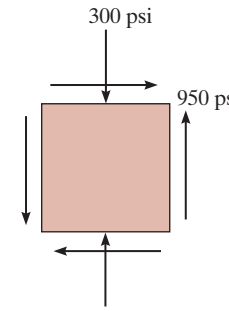

$\sigma_x = 0 \qquad \sigma_y = -300 \text{ psi} \qquad \tau_{xy} = 950 \text{ psi} \qquad \theta = -30°$

$$\sigma_{x'} = \frac{\sigma_x + \sigma_y}{2} + \frac{\sigma_x - \sigma_y}{2} \cos 2\theta + \tau_{xy} \sin 2\theta$$

$$= \frac{0 - 300}{2} + \frac{0 - (-300)}{2} \cos(-60°) + 950 \sin(-60) = -898 \text{ psi} \qquad \textbf{Ans.}$$

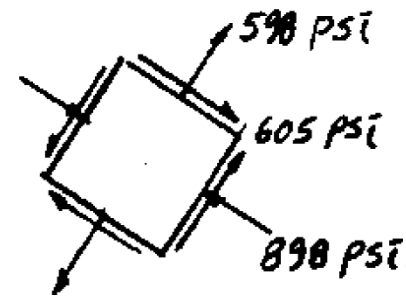

$$\tau_{x'y'} = -\left(\frac{\sigma_x - \sigma_y}{2}\right) \sin 2\theta + \tau_{xy} \cos 2\theta$$

$$= -\left(\frac{0 - (-300)}{2}\right) \sin(-60°) + 950 \cos(-60°) = 605 \text{ psi} \qquad \textbf{Ans.}$$

$$\sigma_{y'} = \frac{\sigma_x + \sigma_y}{2} - \frac{\sigma_x - \sigma_y}{2} \cos 2\theta - \tau_{xy} \sin 2\theta$$

$$= \frac{0 - 300}{2} - \left(\frac{0 - (-300)}{2}\right) \cos(-60°) - 950 \sin(-60°) = 598 \text{ psi} \qquad \textbf{Ans.}$$

Ans:
$\sigma_{x'} = -898$ psi, $\tau_{x'y'} = 605$ psi, $\sigma_{y'} = 598$ psi

9–14. The state of stress at a point is shown on the element. Determine (a) the principal stress and (b) the maximum in-plane shear stress and average normal stress at the point. Specify the orientation of the element in each case. Show the results on each element.

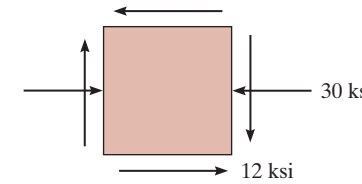

$\sigma_x = -30$ ksi $\qquad \sigma_y = 0 \qquad \tau_{xy} = -12$ ksi

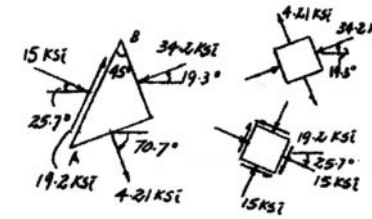

a)

$$\sigma_{1,2} = \frac{\sigma_x + \sigma_y}{2} \pm \sqrt{\left(\frac{\sigma_x - \sigma_y}{2}\right)^2 + \tau_{xy}{}^2} = \frac{-30 + 0}{2} \pm \sqrt{\left(\frac{-30 - 0}{2}\right)^2 + (-12)^2}$$

$$\sigma_1 = 4.21 \text{ ksi} \qquad \textbf{Ans.}$$

$$\sigma_2 = -34.2 \text{ ksi} \qquad \textbf{Ans.}$$

Orientation of principal stress:

$$\tan 2\theta_P = \frac{\tau_{xy}}{(\sigma_x - \sigma_y)/2} = \frac{-12}{(-30-0)/2} = 0.8$$

$$\theta_P = 19.33° \quad \text{and} \quad -70.67°$$

Use Eq. 9-1 to determine the principal plane of σ_1 and σ_2.

$$\sigma_{x'} = \frac{\sigma_x + \sigma_y}{2} + \frac{\sigma_x - \sigma_y}{2}\cos 2\theta + \tau_{xy}\sin 2\theta$$

$$\theta = 19.33°$$

$$\sigma_{x'} = \frac{-30 + 0}{2} + \frac{-30 - 0}{2}\cos 2(19.33°) + (-12)\sin 2(19.33°) = -34.2 \text{ ksi}$$

Therefore $\theta_{P_2} = 19.3°$ **Ans.**

and $\theta_{P_1} = -70.7°$ **Ans.**

b)

$$\tau_{\max_{\text{in-plane}}} = \sqrt{\left(\frac{\sigma_x - \sigma_y}{2}\right)^2 + \tau_{xy}{}^2} = \sqrt{\left(\frac{-30 - 0}{2}\right)^2 + (-12)^2} = 19.2 \text{ ksi} \qquad \textbf{Ans.}$$

$$\sigma_{\text{avg}} = \frac{\sigma_x + \sigma_y}{2} = \frac{-30 + 0}{2} = -15 \text{ ksi} \qquad \textbf{Ans.}$$

Orientation of max, in - plane shear stress:

$$\tan 2\theta_s = \frac{-(\sigma_x - \sigma_y)/2}{\tau_{xy}} = \frac{-(-30 - 0)/2}{-12} = -1.25$$

$$\theta_s = -25.7° \quad \text{and} \quad 64.3° \qquad \textbf{Ans.}$$

By observation, in order to preserve equllibrium along AB, $\tau_{\max}$ has to act in the direction shown in the figure.

Ans:
$\sigma_1 = 4.21$ ksi, $\sigma_2 = -34.2$ ksi,
$\theta_{p2} = 19.3°$ and $\theta_{p1} = -70.7°$,
$\tau_{\max_{\text{in-plane}}} = 19.2$ ksi, $\sigma_{\text{avg}} = -15$ ksi, $\theta_s = -25.7°$
and 64.3°

9–15. The state of stress at a point is shown on the element. Determine (a) the principal stress and (b) the maximum in-plane shear stress and average normal stress at the point. Specify the orientation of the element in each case.

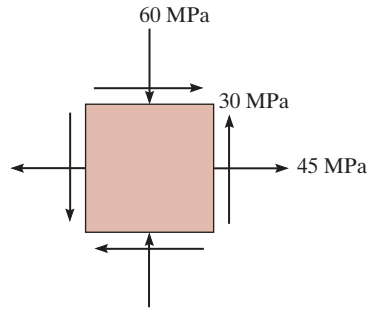

$\sigma_x = 45$ MPa $\qquad \sigma_y = -60$ MPa $\qquad \tau_{xy} = 30$ MPa

a) $$\sigma_{1,2} = \frac{\sigma_x + \sigma_y}{2} \pm \sqrt{\left(\frac{\sigma_x - \sigma_y}{2}\right)^2 + \tau_{xy}^2}$$

$$= \frac{45 - 60}{2} \pm \sqrt{\left(\frac{45 - (-60)}{2}\right)^2 + (30)^2}$$

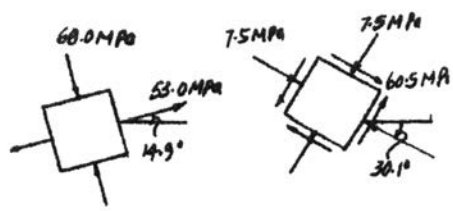

$\sigma_1 = 53.0$ MPa **Ans.**

$\sigma_2 = -68.0$ MPa **Ans.**

Orientation of principal stress:

$$\tan 2\theta_p = \frac{\tau_{xy}}{(\sigma_x - \sigma_y)/2} = \frac{30}{(45 - (-60))/2} = 0.5714$$

$\theta_p = 14.87°, \qquad -75.13°$

Use Eq. 9–1 to determine the principal plane of σ_1 and σ_2:

$$\sigma_{x'} = \frac{\sigma_x + \sigma_y}{2} + \frac{\sigma_x - \sigma_y}{2} \cos 2\theta + \tau_{xy} \sin 2\theta, \qquad \text{where } \theta = 14.87°$$

$$= \frac{45 + (-60)}{2} + \frac{45 - (-60)}{2} \cos 29.74° + 30 \sin 29.74° = 53.0 \text{ MPa}$$

Therefore $\theta_{p1} = 14.9°$ **Ans.** and $\theta_{p2} = -75.1°$ **Ans.**

b) $$\tau_{\max_{\text{in-plane}}} = \sqrt{\left(\frac{\sigma_x - \sigma_y}{2}\right)^2 + \tau_{xy}^2} = \sqrt{\left(\frac{45 - (-60)}{2}\right)^2 + 30^2} = 60.5 \text{ MPa}$$ **Ans.**

$$\sigma_{\text{avg}} = \frac{\sigma_x + \sigma_y}{2} = \frac{45 + (-60)}{2} = -7.50 \text{ MPa}$$ **Ans.**

Orientation of maximum in-plane shear stress:

$$\tan 2\theta_y = \frac{-(\sigma_x - \sigma_y)/2}{\tau_{xy}} = \frac{-(45 - (-60))/2}{30} = -1.75$$

$\theta_y = -30.1°$ **Ans.** and $\theta_y = 59.9°$ **Ans.**

By observation, in order to preserve equilibrium along AB, $\tau_{\max}$ has to act in the direction shown.

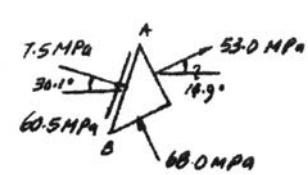

Ans:
$\sigma_1 = 53.0$ MPa, $\sigma_2 = -68.0$ MPa,
$\theta_{p1} = 14.9°$ and $\theta_{p2} = -75.1°$,
$\sigma_{\text{avg}} = -7.50$ MPa, $\tau_{\max_{\text{in-plane}}} = 60.5$ MPa,
$\theta_s = -30.1°$ and $59.9°$

***9–16.** Determine the equivalent state of stress on an element at the point which represents (a) the principal stresses and (b) the maximum in-plane shear stress and the associated average normal stress. Also, for each case, determine the corresponding orientation of the element with respect to the element shown and sketch the results on the element.

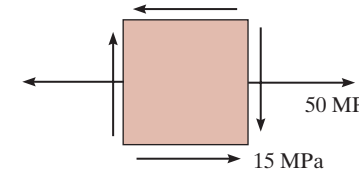

Normal and Shear Stress:

$$\sigma_x = 50 \text{ MPa} \qquad \sigma_y = 0 \qquad \tau_{xy} = -15 \text{ MPa}$$

In-Plane Principal Stresses:

$$\sigma_{1,2} = \frac{\sigma_x + \sigma_y}{2} \pm \sqrt{\left(\frac{\sigma_x - \sigma_y}{2}\right)^2 + \tau_{xy}^2}$$

$$= \frac{50 + 0}{2} \pm \sqrt{\left(\frac{50 - 0}{2}\right)^2 + (-15)^2}$$

$$= 25 \pm \sqrt{850}$$

$$\sigma_1 = 54.2 \text{ MPa} \qquad \sigma_2 = -4.15 \text{ MPa}$$ **Ans.**

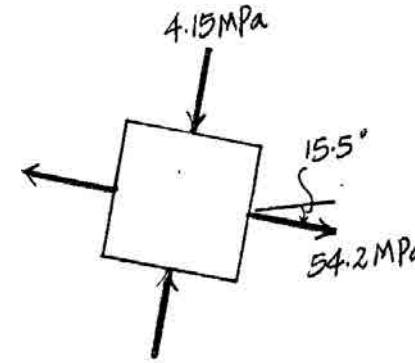

(a)

Orientation of Principal Plane:

$$\tan 2\theta_p = \frac{\tau_{xy}}{(\sigma_x - \sigma_y)/2} = \frac{-15}{(50 - 0)/2} = -0.6$$

$$\theta_p = -15.48° \text{ and } 74.52°$$

Substitute $\theta = -15.48°$ into

$$\sigma_{x'} = \frac{\sigma_x + \sigma_y}{2} + \frac{\sigma_x - \sigma_y}{2} \cos 2\theta + \tau_{xy} \sin 2\theta$$

$$= \frac{50 + 0}{2} + \frac{50 - 0}{2} \cos(-30.96°) + (-15) \sin(-30.96°)$$

$$= 54.2 \text{ MPa} = \sigma_1$$

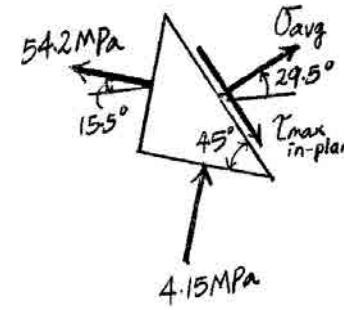

(b)

Thus,

$$(\theta_p)_1 = -15.5° \text{ and } (\theta_p)_2 = 74.5°$$ **Ans.**

The element that represents the state of principal stress is shown in Fig. *a*.

Maximum In-Plane Shear Stress:

$$\tau_{\substack{\max \\ \text{in-plane}}} = \sqrt{\left(\frac{\sigma_x - \sigma_y}{2}\right)^2 + \tau_{xy}^2} = \sqrt{\left(\frac{50 - 0}{2}\right)^2 + (-15)^2} = 29.2 \text{ MPa}$$ **Ans.**

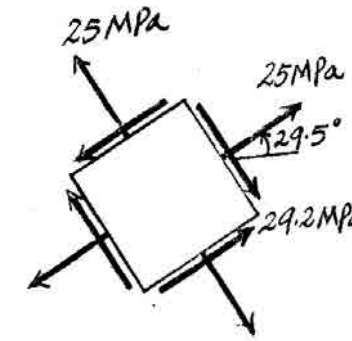

(c)

9–16. Continued

Orientation of the Plane of Maximum In-Plane Shear Stress:

$$\tan 2\theta_s = \frac{-(\sigma_x - \sigma_y)/2}{\tau_{xy}} = \frac{-(50 - 0)/2}{-15} = 1.667$$

$$\theta_s = 29.5° \text{ and } 120°$$ **Ans.**

By inspection, $\tau_{\substack{\max \\ \text{in-plane}}}$ has to act in the same sense shown in Fig. *b* to maintain equilibrium.

Average Normal Stress:

$$\sigma_{\text{avg}} = \frac{\sigma_x + \sigma_y}{2} = \frac{50 + 0}{2} = 25 \text{ MPa}$$ **Ans.**

The element that represents the state of maximum in-plane shear stress is shown in Fig. *c*.

9–17. Determine the equivalent state of stress on an element at the same point which represents (a) the principal stress, and (b) the maximum in-plane shear stress and the associated average normal stress. Also, for each case, determine the corresponding orientation of the element with respect to the element shown. Sketch the results on each element.

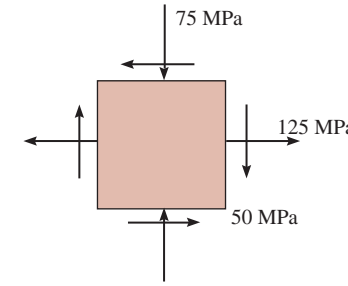

Normal and Shear Stress:

$\sigma_x = 125$ MPa $\qquad \sigma_y = -75$ MPa $\qquad \tau_{xy} = -50$ MPa

In - Plane Principal Stresses:

$$\sigma_{1,2} = \frac{\sigma_x - \sigma_y}{2} \pm \sqrt{\left(\frac{\sigma_x - \sigma_y}{2}\right)^2 + \tau_{xy}{}^2}$$

$$= \frac{125 + (-75)}{2} \pm \sqrt{\left(\frac{125 - (-75)}{2}\right)^2 + (-50)^2}$$

$$= 25 \pm \sqrt{12500}$$

$\sigma_1 = 137$ MPa $\qquad \sigma_2 = -86.8$ MPa $\qquad$ **Ans.**

Orientation of Principal Plane:

$$\tan 2\theta_P = \frac{\tau_{xy}}{(\sigma_x - \sigma_y)/2} = \frac{-50}{(125-(-75))/2} = -0.5$$

$$\theta_p = -13.28° \text{ and } 76.72°$$

Substitute $\theta = -13.28°$ into

$$\sigma_{x'} = \frac{\sigma_x + \sigma_y}{2} + \frac{\sigma_x - \sigma_y}{2}\cos 2\theta + \tau_{xy}\sin 2\theta$$

$$= \frac{125 + (-75)}{2} + \frac{125 - (-75)}{2}\cos(-26.57°) + (-50)\sin(-26.57°)$$

$$= 137 \text{ MPa} = \sigma_1$$

Thus,

$$(\theta_p)_1 = -13.3° \text{ and } (\theta_p)_2 = 76.7° \qquad \textbf{Ans.}$$

$$125 - (-75)/(-50)$$

The element that represents the state of principal stress is shown in Fig. *a*.

Maximum In - Plane Shear Stress:

$$\tau_{\substack{\max \\ \text{in-plane}}} = \sqrt{\left(\frac{\sigma_x - \sigma_y}{2}\right)^2 + \tau_{xy}{}^2} = \sqrt{\left(\frac{125 - (-75)}{2}\right)^2 + 50^2} = 112 \text{ MPa} \qquad \textbf{Ans.}$$

Orientation of the Plane of Maximum In - Plane Shear Stress:

$$\tan 2\theta_s = -\frac{(\sigma_x - \sigma_y)/2}{\tau_{xy}} = -\frac{(125 - (-75))/2}{-50} = 2$$

$$\theta_s = 31.7° \text{ and } 122°$$

9–17. Continued

By inspection, $\tau_{\substack{\max \\ \text{in-plane}}}$ has to act in the same sense shown in Fig. *b* to maintain equilibrium.

Average Normal Stress:

$$\sigma_{avg} = \frac{\sigma_x + \sigma_y}{2} = \frac{125 + (-75)}{2} = 25 \text{ MPa} \qquad \textbf{Ans.}$$

The element that represents the state of maximum in - plane shear stress is shown in Fig. *c*.

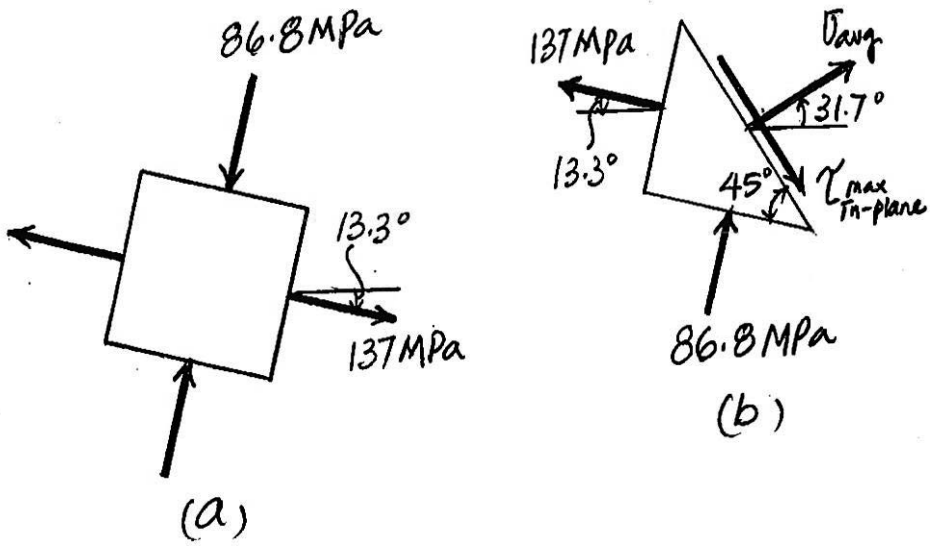

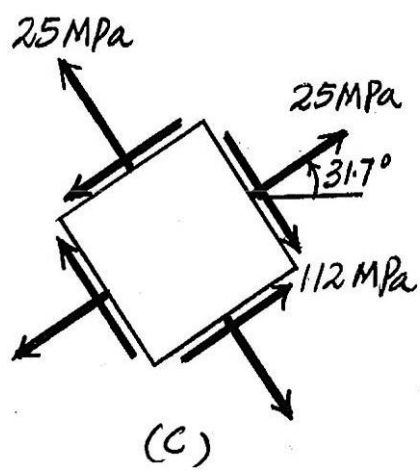

Ans:
$\sigma_1 = 137$ MPa, $\sigma_2 = -86.8$ MPa,
$\theta_{p1} = -13.3°$, $\theta_{p2} = 76.7°$, $\tau_{\substack{\max \\ \text{in-plane}}} = 112$ MPa,
$\theta_s = -31.7°$ and $122°$, $\sigma_{avg} = 25$ MPa

9–18. A point on a thin plate is subjected to the two successive states of stress shown. Determine the resultant state of stress represented on the element oriented as shown on the right.

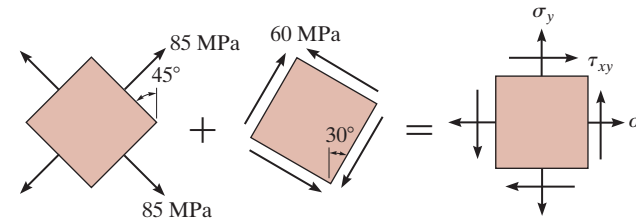

For element a:

$\sigma_x = \sigma_y = 85$ MPa $\qquad \tau_{xy} = 0 \qquad \theta = -45°$

$$(\sigma_{x'})_a = \frac{\sigma_x + \sigma_y}{2} + \frac{\sigma_x - \sigma_y}{2}\cos 2\theta + \tau_{xy}\sin 2\theta$$

$$= \frac{85 + 85}{2} + \frac{85 - 85}{2}\cos(-90°) + 0 = 85 \text{ MPa}$$

$$(\sigma_{y'})_a = \frac{\sigma_x + \sigma_y}{2} + \frac{\sigma_x - \sigma_y}{2}\cos 2\theta - \tau_{xy}\sin 2\theta$$

$$= \frac{85 + 85}{2} - \frac{85 - 85}{2}\cos(-90°) - 0 = 85 \text{ MPa}$$

$$(\tau_{x'y'})_a = -\frac{\sigma_x - \sigma_y}{2}\sin 2\theta + \tau_{xy}\cos 2\theta$$

$$= -\frac{85 - 85}{2}\sin(-90°) + 0 = 0$$

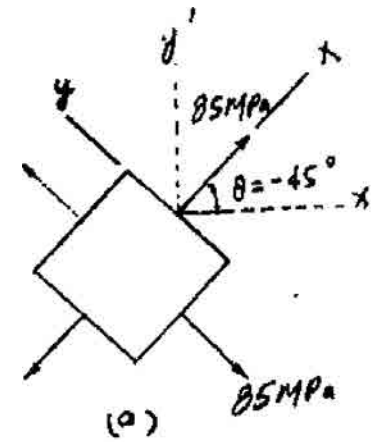

+

For element b:

$\sigma_x = \sigma_y = 0 \qquad \tau_{xy} = 60$ MPa $\qquad \theta = -60°$

$$(\sigma_{x'})_b = \frac{\sigma_x + \sigma_y}{2} + \frac{\sigma_x - \sigma_y}{2}\cos 2\theta + \tau_{xy}\sin 2\theta$$

$$= 0 + 0 + 60\sin(-120°) = -51.96 \text{ MPa}$$

$$(\sigma_{y'})_b = \frac{\sigma_x + \sigma_y}{2} - \frac{\sigma_x - \sigma_y}{2}\cos 2\theta - \tau_{xy}\sin 2\theta$$

$$= 0 - 0 - 60\sin(-120°) = 51.96 \text{ MPa}$$

$$(\tau_{x'y'})_b = -\frac{\sigma_x - \sigma_y}{2}\sin 2\theta - \tau_{xy}\cos 2\theta$$

$$= -\frac{85 - 85}{2}\sin(-120°) + 60\cos(-120°) = -30 \text{ MPa}$$

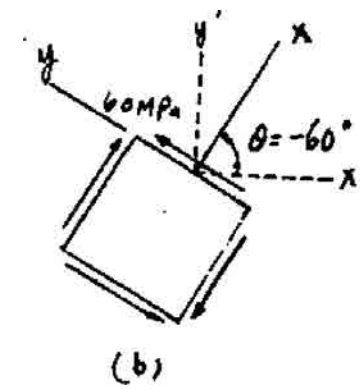

$\sigma_x = (\sigma_{x'})_a + (\sigma_{x'})_b = 85 + (-51.96) = 33.0$ MPa **Ans.**

$\sigma_y = (\sigma_{y'})_a + (\sigma_{y'})_b = 85 + 51.96 = 137$ MPa **Ans.**

$\tau_{xy} = (\tau_{x'y'})_a + (\tau_{x'y'})_b = 0 + (-30) = -30$ MPa **Ans.**

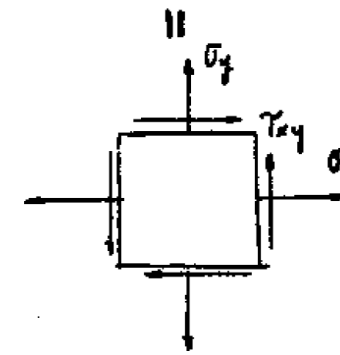

Ans:
$\sigma_x = 33.0$ MPa, $\sigma_y = 137$ MPa, $\tau_{xy} = -30$ MPa

9–19. Determine the equivalent state of stress on an element at the same point which represents (a) the principal stress, and (b) the maximum in-plane shear stress and the associated average normal stress. Also, for each case, determine the corresponding orientation of the element with respect to the element shown and sketch the results on the element.

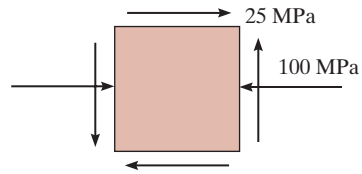

Normal and Shear Stress:

$$\sigma_x = -100 \text{ MPa} \qquad \sigma_y = 0 \qquad \tau_{xy} = 25 \text{ MPa}$$

In-Plane Principal Stresses:

$$\sigma_{1,2} = \frac{\sigma_x + \sigma_y}{2} \pm \sqrt{\left(\frac{\sigma_x - \sigma_y}{2}\right)^2 + \tau_{xy}^2}$$

$$= \frac{-100 + 0}{2} \pm \sqrt{\left(\frac{-100 - 0}{2}\right)^2 + 25^2}$$

$$= -50 \pm \sqrt{3125}$$

$$\sigma_1 = 5.90 \text{ MPa} \qquad \sigma_2 = -106 \text{ MPa}$$ **Ans.**

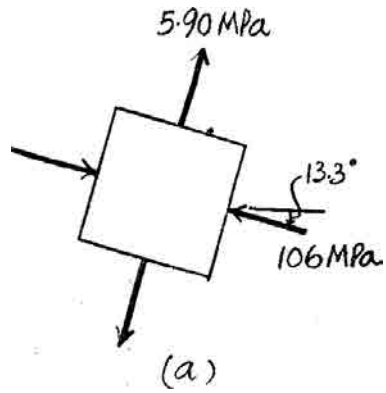

Orientation of Principal Plane:

$$\tan 2\theta_p = \frac{\tau_{xy}}{(\sigma_x - \sigma_y)/2} = \frac{25}{(-100 - 0)/2} = -0.5$$

$$\theta_p = -13.28° \text{ and } 76.72°$$

Substitute $\theta = -13.28°$ into

$$\sigma_{x'} = \frac{\sigma_x + \sigma_y}{2} + \frac{\sigma_x - \sigma_y}{2} \cos 2\theta + \tau_{xy} \sin 2\theta$$

$$= \frac{-100 + 0}{2} + \frac{-100 - 0}{2} \cos(-26.57°) + 25 \sin(-26.57°)$$

$$= -106 \text{ MPa} = \sigma_2$$

Thus,

$$(\theta_p)_1 = 76.7° \text{ and } (\theta_p)_2 = -13.3°$$ **Ans.**

The element that represents the state of principal stress is shown in Fig. *a*.

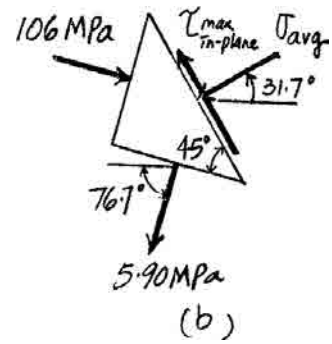

Maximum In-Plane Shear Stress:

$$\tau_{\substack{\max \\ \text{in-plane}}} = \sqrt{\left(\frac{\sigma_x - \sigma_y}{2}\right)^2 + \tau_{xy}^2} = \sqrt{\left(\frac{-100 - 0}{2}\right)^2 + 25^2} = 55.9 \text{ MPa}$$ **Ans.**

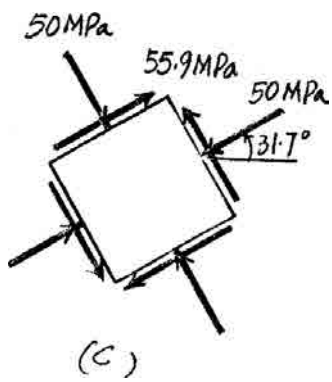

9–19. Continued

Orientation of the Plane of Maximum In-Plane Shear Stress:

$$\tan 2\theta_s = -\frac{(\sigma_x - \sigma_y)/2}{\tau_{xy}} = -\frac{(-100 - 0)/2}{25} = 2$$

$$\theta_s = 31.7° \text{ and } 122°$$ **Ans.**

By inspection, $\tau_{\substack{\max \\ \text{in-plane}}}$ has to act in the same sense shown in Fig. *b* to maintain equilibrium.

Average Normal Stress:

$$\sigma_{\text{avg}} = \frac{\sigma_x + \sigma_y}{2} = \frac{-100 + 0}{2} = -50 \text{ MPa}$$ **Ans.**

The element that represents the state of maximum in-plane shear stress is shown in Fig. *c*.

Ans:
$\sigma_1 = 5.90$ MPa, $\sigma_2 = -106$ MPa,
$\theta_{p1} = 76.7°$ and $\theta_{p2} = -13.3°$,
$\tau_{\substack{\max \\ \text{in-plane}}} = 55.9$ MPa, $\sigma_{\text{avg}} = -50$ MPa,
$\theta_s = 31.7°$ and $122°$

***9–20.** Planes AB and BC at a point are subjected to the stresses shown. Determine the principal stresses acting at this point and find σ_{BC}.

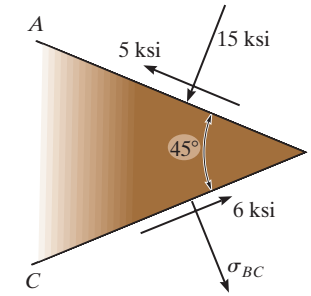

Stress Transformation Equations: Referring to Fig. *a* and the established sign convention,

$$\theta = -135^\circ \quad \sigma_x = -15 \text{ ksi} \quad \sigma_y = \sigma_{AC} \quad \tau_{xy} = 5 \text{ ksi} \quad \tau_{x'y'} = 6 \text{ ksi} \quad \sigma_{x'} = \sigma_{BC}$$

We have

$$\tau_{x'y'} = -\frac{\sigma_x - \sigma_y}{2} \sin 2\theta + \tau_{xy} \cos 2\theta$$

$$6 = -\frac{-15 - \sigma_{AC}}{2} \sin(-270^\circ) + 5 \cos(-270^\circ)$$

$$\sigma_{AC} = -3 \text{ ksi}$$

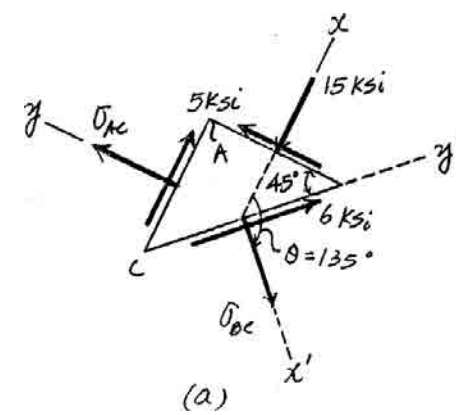

Using this result,

$$\sigma_{1,2} = \frac{\sigma_x + \sigma_y}{2} \pm \sqrt{\left(\frac{\sigma_x - \sigma_y}{2}\right)^2 + \tau_{xy}^2}$$

$$= \frac{-15 + (-3)}{2} \pm \sqrt{\left[\frac{-15 - (-3)}{2}\right]^2 + 5^2}$$

$$\sigma_1 = -1.19 \text{ ksi} \qquad \sigma_2 = -16.8 \text{ ksi} \qquad \textbf{Ans.}$$

$$\sigma_{BC} = \sigma_{x'} = \frac{\sigma_x + \sigma_y}{2} + \frac{\sigma_x - \sigma_y}{2} \cos 2\theta - \tau_{xy} \sin 2\theta$$

$$= \frac{-15 + (-3)}{2} + \frac{-15 - (-3)}{2} \cos(-270^\circ) - 5 \sin(-270^\circ)$$

$$= -14 \text{ ksi} \qquad \textbf{Ans.}$$

9–21. The stress acting on two planes at a point is indicated. Determine the shear stress on plane *a–a* and the principal stresses at the point.

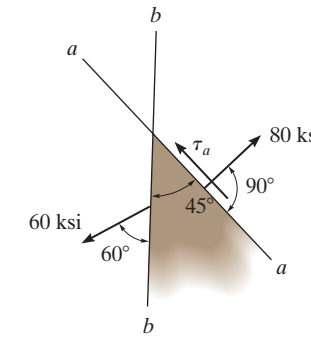

$$\sigma_x = 60 \sin 60° = 51.962 \text{ ksi}$$

$$\tau_{xy} = 60 \cos 60° = 30 \text{ ksi}$$

$$\sigma_a = \frac{\sigma_x + \sigma_y}{2} + \frac{\sigma_x - \sigma_y}{2} \cos 2\theta + \tau_{xy} \sin 2\theta$$

$$80 = \frac{51.962 + \sigma_y}{2} + \frac{51.962 - \sigma_y}{2} \cos (90°) + 30 \sin (90°)$$

$$\sigma_y = 48.038 \text{ ksi}$$

$$\tau_a = -\left(\frac{\sigma_x - \sigma_y}{2}\right) \sin 2\theta + \tau_{xy} \cos \theta$$

$$= -\left(\frac{51.962 - 48.038}{2}\right) \sin (90°) + 30 \cos (90°)$$

$$\tau_a = -1.96 \text{ ksi}$$ **Ans.**

$$\sigma_{1,2} = \frac{\sigma_x + \sigma_y}{2} \pm \sqrt{\left(\frac{\sigma_x - \sigma_y}{2}\right)^2 + \tau_{xy}^2}$$

$$= \frac{51.962 + 48.038}{2} \pm \sqrt{\left(\frac{51.962 - 48.038}{2}\right)^2 + (30)^2}$$

$$\sigma_1 = 80.1 \text{ ksi}$$ **Ans.**

$$\sigma_2 = 19.9 \text{ ksi}$$ **Ans.**

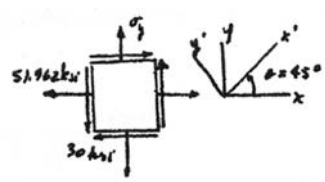

Ans:
$\tau_a = -1.96$ ksi, $\sigma_1 = 80.1$ ksi, $\sigma_2 = 19.9$ ksi

9–22. The grains of wood in the board make an angle of 20° with the horizontal as shown. Determine the normal and shear stress that act perpendicular and parallel to the grains if the board is subjected to an axial load of 250 N.

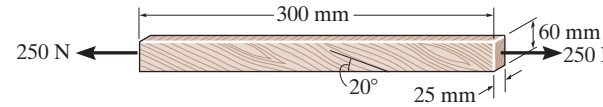

$$\sigma_x = \frac{P}{A} = \frac{250}{(0.06)(0.025)} = 166.67 \text{ kPa}$$

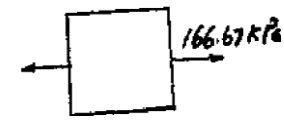

$$\sigma_y = 0 \qquad \tau_{xy} = 0$$

$$\theta = 70°$$

$$\sigma_{x'} = \frac{\sigma_x + \sigma_y}{2} + \frac{\sigma_x - \sigma_y}{2} \cos 2\theta + \tau_{xy} \sin 2\theta$$

$$= \frac{166.67 + 0}{2} + \frac{166.67 - 0}{2} \cos 140° + 0 = 19.5 \text{ kPa} \qquad \textbf{Ans.}$$

$$\tau_{x'y'} = -\left(\frac{\sigma_x - \sigma_y}{2}\right) \sin 2\theta + \tau_{xy} \cos 2\theta$$

$$= -\left(\frac{166.67 - 0}{2}\right) \sin 140° + 0 = -53.6 \text{ kPa} \qquad \textbf{Ans.}$$

Ans:
$\sigma_{x'} = 19.5$ kPa, $\tau_{x'y'} = -53.6$ kPa

9–23. The wood beam is subjected to a load of 12 kN. If a grain of wood in the beam at point A makes an angle of 25° with the horizontal as shown, determine the normal and shear stress that act perpendicular and parallel to the grain due to the loading.

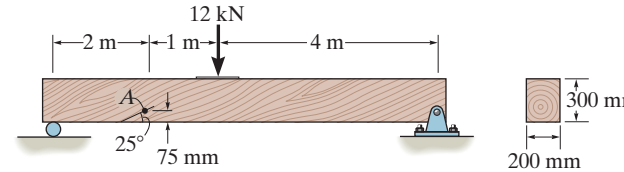

$$I = \frac{1}{12}(0.2)(0.3)^3 = 0.45(10^{-3})\ \text{m}^4$$

$$Q_A = \bar{y}A' = 0.1125(0.2)(0.075) = 1.6875(10^{-3})\ \text{m}^3$$

$$\sigma_A = \frac{My_A}{I} = \frac{13.714(10^3)(0.075)}{0.45(10^{-3})} = 2.2857\ \text{MPa (T)}$$

$$\tau_A = \frac{VQ_A}{It} = \frac{6.875(10^3)(1.6875)(10^{-3})}{0.45(10^{-3})(0.2)} = 0.1286\ \text{MPa}$$

$$\sigma_x = 2.2857\ \text{MPa} \qquad \sigma_y = 0 \qquad \tau_{xy} = -0.1286\ \text{MPa} \qquad \theta = 115°$$

$$\sigma_{x'} = \frac{\sigma_x + \sigma_y}{2} + \frac{\sigma_x - \sigma_y}{2}\cos 2\theta + \tau_{xy}\sin 2\theta$$

$$\sigma_{x'} = \frac{2.2857 + 0}{2} + \frac{2.2857 - 0}{2}\cos 230° + (-0.1286)\sin 230°$$

$$= 0.507\ \text{MPa} \qquad \textbf{Ans.}$$

$$\tau_{x'y'} = -\frac{\sigma_x - \sigma_y}{2}\sin 2\theta + \tau_{xy}\cos 2\theta$$

$$= -\left(\frac{2.2857 - 0}{2}\right)\sin 230° + (-0.1286)\cos 230°$$

$$= 0.958\ \text{MPa} \qquad \textbf{Ans.}$$

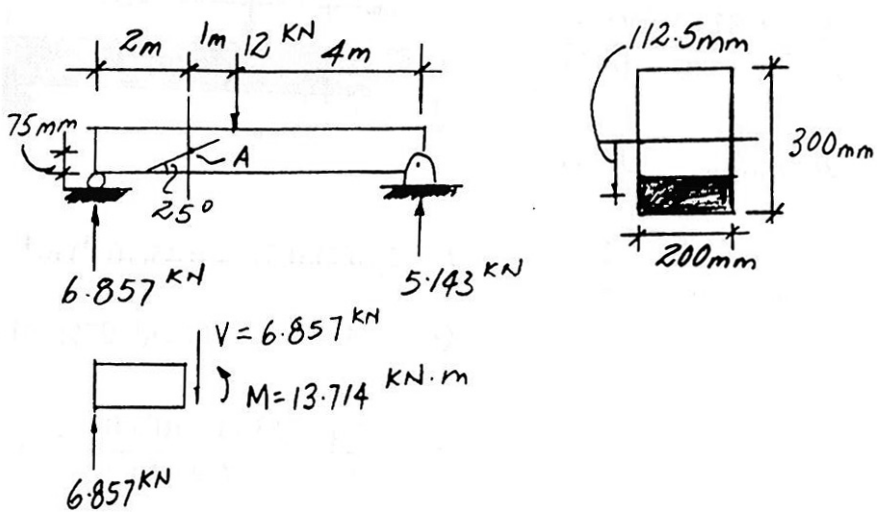

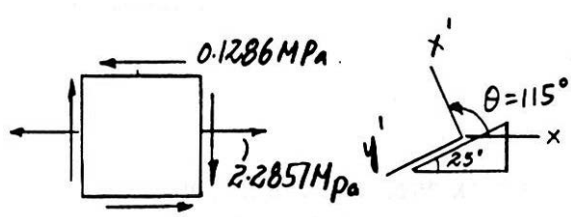

Ans:
$\sigma_{x'} = 0.507$ MPa, $\tau_{x'y'} = 0.958$ MPa

9–24. The wood beam is subjected to a load of 12 kN. Determine the principal stress at point A and specify the orientation of the element.

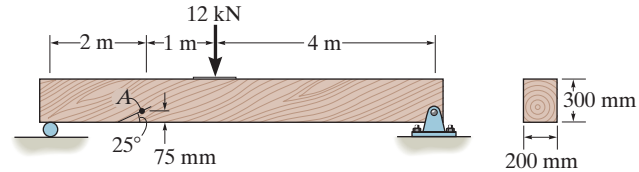

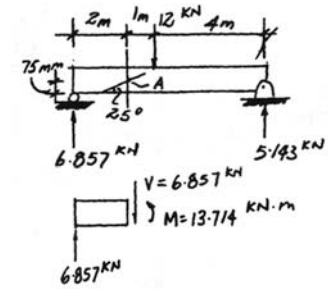

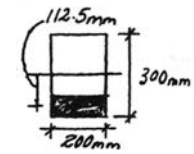

$$I = \frac{1}{12}(0.2)(0.3)^3 = 0.45(10^{-3})\ \text{m}^4$$

$$Q_A = \bar{y}A' = 0.1125(0.2)(0.075) = 1.6875(10^{-3})\ \text{m}^3$$

$$\sigma_A = \frac{My_A}{I} = \frac{13.714(10^3)(0.075)}{0.45(10^{-3})} = 2.2857\ \text{MPa (T)}$$

$$\tau_A = \frac{VQ_A}{It} = \frac{6.875(10^3)(1.6875)(10^{-3})}{0.45(10^{-3})(0.2)} = 0.1286\ \text{MPa}$$

$$\sigma_x = 2.2857\ \text{MPa} \qquad \sigma_y = 0 \qquad \tau_{xy} = -0.1286\ \text{MPa}$$

$$\sigma_{1,2} = \frac{\sigma_x + \sigma_y}{2} \pm \sqrt{\left(\frac{\sigma_x - \sigma_y}{2}\right)^2 + \tau_{xy}^2}$$

$$= \frac{2.2857 + 0}{2} \pm \sqrt{\left(\frac{2.2857 - 0}{2}\right)^2 + (-0.1286)^2}$$

$\sigma_1 = 2.29$ MPa **Ans.**

$\sigma_2 = -7.21$ kPa **Ans.**

$$\tan 2\theta_p = \frac{\tau_{xy}}{(\sigma_x - \sigma_y)/2} = \frac{-0.1286}{(2.2857 - 0)/2}$$

$$\theta_p = -3.21°$$

Check direction of principal stress:

$$\sigma_{x'} = \frac{\sigma_x + \sigma_y}{2} + \frac{\sigma_x - \sigma_y}{2}\cos 2\theta + \tau_{xy}\sin 2\theta$$

$$= \frac{2.2857 + 0}{2} + \frac{2.2857 - 0}{2}\cos(-6.42°) - 0.1285\sin(-6.42)$$

$$= 2.29\ \text{MPa}$$

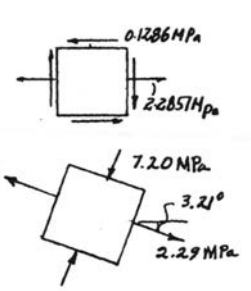

9–25. The wooden block will fail if the shear stress acting along the grain is 550 psi. If the normal stress $\sigma_x = 400$ psi, determine the necessary compressive stress σ_y that will cause failure.

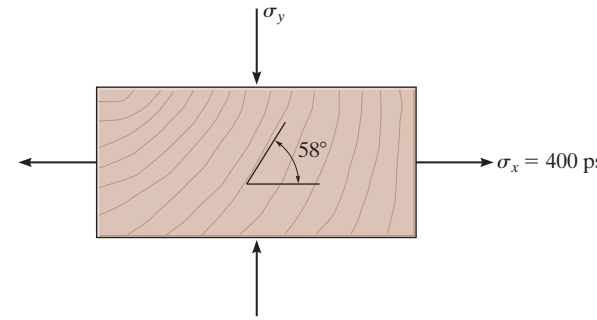

$$\tau_{x'y'} = -\left(\frac{\sigma_x - \sigma_y}{2}\right)\sin 2\theta + \tau_{xy}\cos 2\theta$$

$$550 = -\left(\frac{400 - \sigma_y}{2}\right)\sin 296^\circ + 0$$

$$\sigma_y = -824 \text{ psi}$$ **Ans.**

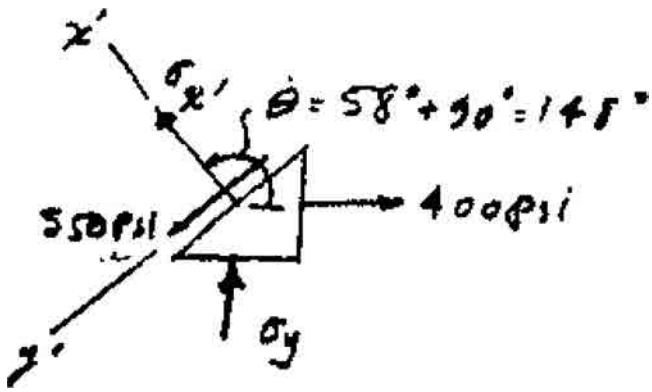

Ans:
$\sigma_y = -824$ psi

9–26. The bracket is subjected to the force of 3 kip. Determine the principal stress and maximum in-plane shear stress at point A on the cross section at section a–a. Specify the orientation of this state of stress and show the results on elements.

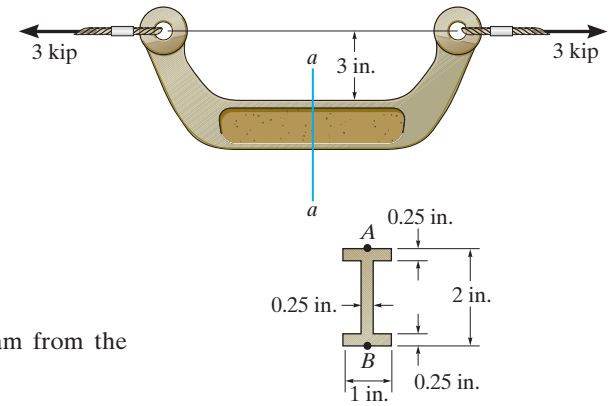

Section $a - a$

Internal Loadings: Consider the equilibrium of the free-body diagram from the bracket's left cut segment, Fig. a.

$$\overset{+}{\rightarrow} \Sigma F_x = 0; \qquad N - 3 = 0 \qquad N = 3 \text{ kip}$$

$$\Sigma M_O = 0; 3(4) - M = 0 \qquad M = 12 \text{ kip} \cdot \text{in}$$

Normal and Shear Stresses: The normal stress is the combination of axial and bending stress. Thus,

$$\sigma = \frac{N}{A} - \frac{My}{I}$$

The cross-sectional area and the moment of inertia about the z axis of the bracket's cross section is

$$A = 1(2) - 0.75(1.5) = 0.875 \text{ in}^2$$

$$I = \frac{1}{12}(1)\left(2^3\right) - \frac{1}{12}(0.75)\left(1.5^3\right) = 0.45573 \text{ in}^4$$

For point A, $y = 1$ in. Then

$$\sigma_A = \frac{3}{0.875} - \frac{(-12)(1)}{0.45573} = 29.76 \text{ ksi}$$

Since no shear force is acting on the section,

$$\tau_A = 0$$

The state of stress at point A can be represented on the element shown in Fig. b.

In-Plane Principal Stress: $\sigma_x = 29.76$ ksi, $\sigma_y = 0$, and $\tau_{xy} = 0$. Since no shear stress acts on the element,

$$\sigma_1 = \sigma_x = 29.8 \text{ ksi} \quad \sigma_2 = \sigma_y = 0 \qquad \textbf{Ans.}$$

The state of principal stresses can also be represented by the elements shown in Fig. b

Maximum In-Plane Shear Stress:

$$\tau_{\substack{\max \\ \text{in-plane}}} = \sqrt{\left(\frac{\sigma_x - \sigma_y}{2}\right)^2 + \tau_{xy}{}^2} = \sqrt{\left(\frac{29.76 - 0}{2}\right)^2 + 0^2} = 14.9 \text{ ksi} \qquad \textbf{Ans.}$$

Orientation of the Plane of Maximum In-Plane Shear Stress:

$$\tan 2\theta_s = -\frac{(\sigma_x - \sigma_y)/2}{\tau_{xy}} = -\frac{(29.76 - 0)/2}{0} = -\infty$$

$$\theta_s = -45^\circ \text{ and } 45^\circ \qquad \textbf{Ans.}$$

9–26. Continued

Substituting $\theta = -45°$ into

$$\tau_{x'y'} = -\frac{\sigma_x - \sigma_y}{2}\sin 2\theta + \tau_{xy}\cos 2\theta$$

$$= -\frac{29.76 - 0}{2}\sin(-90°) + 0$$

$$= 14.9 \text{ ksi} = \tau_{\substack{\text{max}\\ \text{in-plane}}}$$

This indicates that $\tau_{\substack{\text{max}\\ \text{in-plane}}}$ is directed in the positive sense of the y' axes on the face of the element defined by $\theta_s = -45°$.

Average Normal Stress:

$$\sigma_{\text{avg}} = \frac{\sigma_x + \sigma_y}{2} = \frac{29.76 + 0}{2} = 14.9 \text{ ksi}$$

The state of maximum in - plane shear stress is represented by the element shown in Fig. *c*.

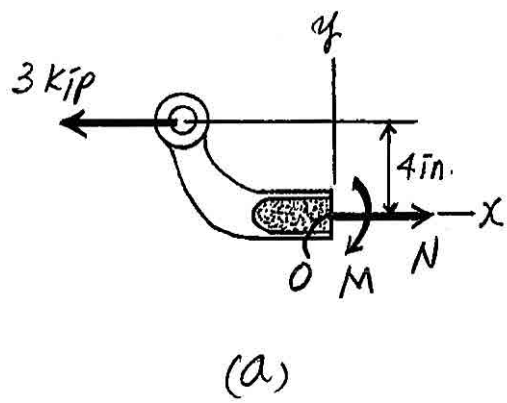

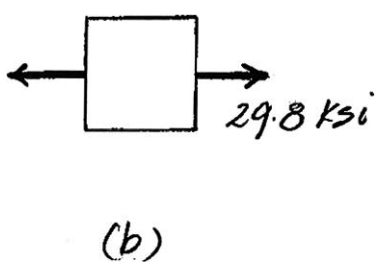

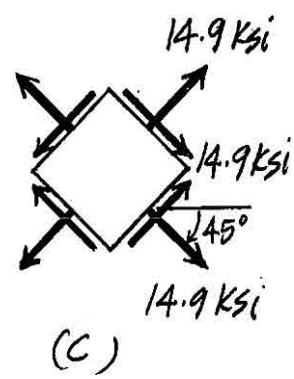

Ans:
$\sigma_1 = 29.8$ ksi, $\sigma_2 = 0$, $\tau_{\substack{\text{max}\\ \text{in-plane}}} = 14.9$ ksi,
$\theta_s = -45°$ and $45°$

9–27. The bracket is subjected to the force of 3 kip. Determine the principal stress and maximum in-plane shear stress at point B on the cross section at section a–a. Specify the orientation of this state of stress and show the results on elements.

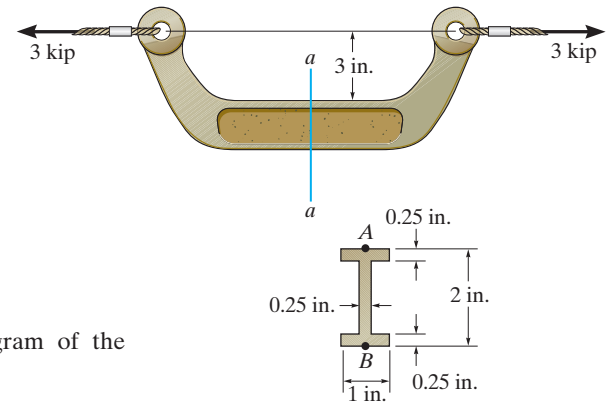

Section $a - a$

Internal Loadings: Consider the equilibrium of the free-body diagram of the bracket's left cut segment, Fig. a.

$\overset{+}{\rightarrow} \Sigma F_x = 0; \qquad N - 3 = 0 \qquad N = 3\,\text{kip}$

$\Sigma M_O = 0;\ 3(4) - M = 0 \qquad M = 12\ \text{kip}\cdot\text{in}$

Normal and Shear Stresses: The normal stress is the combination of axial and bending stress. Thus,

$$\sigma = \frac{N}{A} - \frac{My}{I}$$

The cross - sectional area and the moment of inertia about the z axis of the bracket's cross section is

$$A = 1(2) - 0.75(1.5) = 0.875\ \text{in}^2$$

$$I = \frac{1}{12}(1)\left(2^3\right) - \frac{1}{12}(0.75)\left(1.5^3\right) = 0.45573\ \text{in}^4$$

For point B, $y = -1$ in. Then

$$\sigma_B = \frac{3}{0.875} - \frac{(-12)(-1)}{0.45573} = -22.90\ \text{ksi}$$

Since no shear force is acting on the section,

$$\tau_B = 0$$

The state of stress at point A can be represented on the element shown in Fig. b.

In - Plane Principal Stress: $\sigma_x = -22.90$ ksi, $\sigma_y = 0$, and $\tau_{xy} = 0$. Since no shear stress acts on the element,

$$\sigma_1 = \sigma_y = 0 \qquad \sigma_2 = \sigma_x = -22.90\ \text{ksi} \qquad \textbf{Ans.}$$

The state of principal stresses can also be represented by the elements shown in Fig. b.

Maximum In - Plane Shear Stress:

$$\tau_{\substack{\text{max}\\ \text{in-plane}}} = \sqrt{\left(\frac{\sigma_x - \sigma_y}{2}\right)^2 + \tau_{xy}{}^2} = \sqrt{\left(\frac{-22.90 - 0}{2}\right)^2 + 0^2} = 11.5\ \text{ksi} \qquad \textbf{Ans.}$$

Orientation of the Plane of Maximum In - Plane Shear Stress:

$$\tan 2\theta_s = -\frac{\left(\sigma_x - \sigma_y\right)/2}{\tau_{xy}} = -\frac{(-22.9 - 0)/2}{0} = -\infty$$

$$\theta_s = 45^\circ \text{ and } 135^\circ \qquad \textbf{Ans.}$$

9–27. Continued

Substituting $\theta = 45°$ into

$$\tau_{x'y'} = -\frac{\sigma_x - \sigma_y}{2}\sin 2\theta + \tau_{xy}\cos 2\theta$$

$$= -\frac{-22.9 - 0}{2}\sin 90° + 0$$

$$= 11.5 \text{ ksi} = \tau_{\substack{\text{max}\\ \text{in-plane}}}$$

This indicates that $\tau_{\substack{\text{max}\\ \text{in-plane}}}$ is directed in the positive sense of the y' axes on the element defined by $\theta_s = 45°$.

Average Normal Stress:

$$\sigma_{\text{avg}} = \frac{\sigma_x + \sigma_y}{2} = \frac{-22.9 + 0}{2} = -11.5 \text{ ksi}$$

The state of maximum in - plane shear stress is represented by the element shown in Fig. *c*.

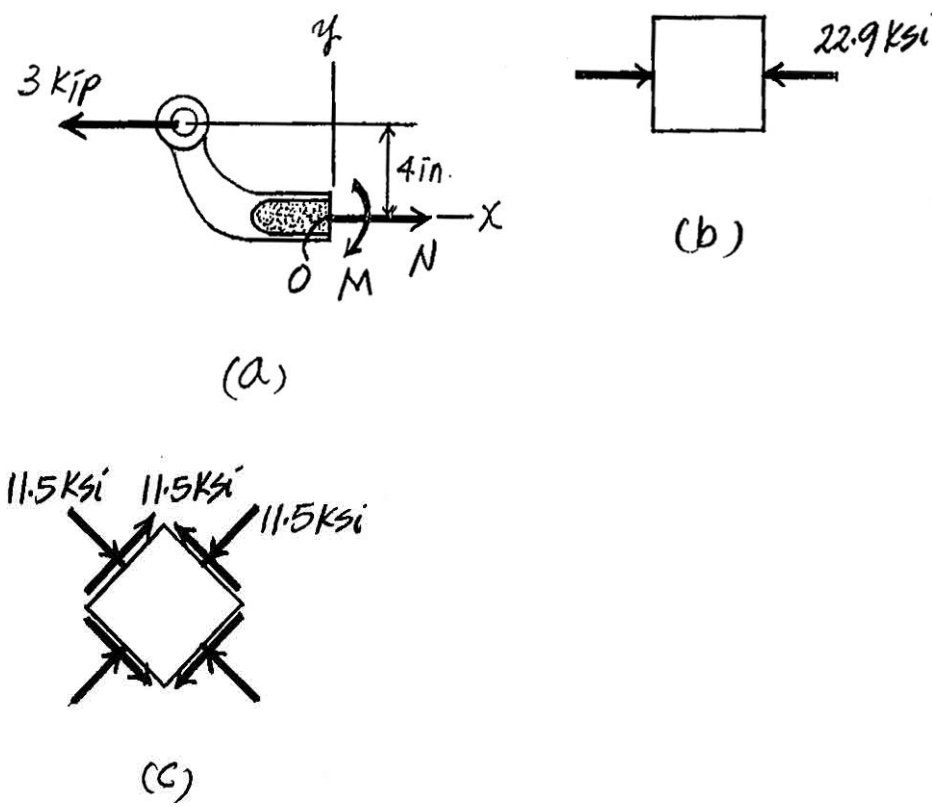

Ans:
$\sigma_1 = 0$, $\sigma_2 = -22.90$ ksi, $\tau_{\substack{\text{max}\\ \text{in-plane}}} = 11.5$ ksi, $\theta_s = 45°$ and $135°$

***9–28.** The 25-mm thick rectangular bar is subjected to the axial load of 10 kN. If the bar is joined by the weld, which makes an angle of 60° with the horizontal, determine the shear stress parallel to the weld and the normal stress perpendicular to the weld.

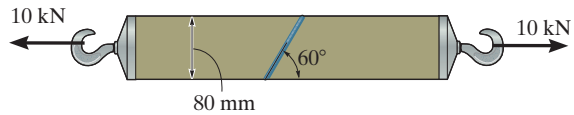

Internal Loadings: Consider the equilibrium of the free-body diagram of the bar's left cut segment, Fig. *a*.

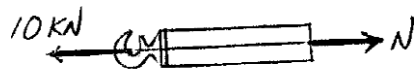

(a)

$$\overset{+}{\rightarrow} \Sigma F_x = 0; \qquad N - 10 = 0 \qquad N = 10 \text{ kN}$$

Normal and Shear Stress: The normal stress is developed by the axial stress only. Thus,

$$\sigma_x = \frac{N}{A} = \frac{10(10^3)}{0.025(0.08)} = 5 \text{ MPa}$$

Since no shear force is acting on the cut section

$$\tau_{xy} = 0$$

The state of stress is represented by the element shown in Fig. *b*.

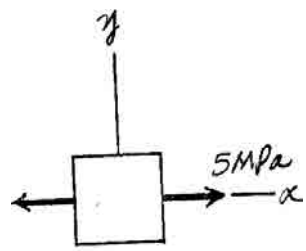

(b)

Stress Transformation Equations: The stresses acting on the plane of weld can be determined by orienting the element in the manner shown in Fig. *c*. We have

$$\theta = -30° \qquad \sigma_x = 5 \text{ MPa} \qquad \sigma_y = 0 \qquad \tau_{xy} = 0$$

We obtain

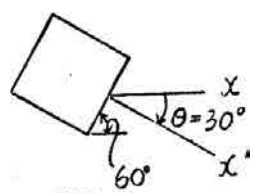

(c)

$$\sigma_{x'} = \frac{\sigma_x + \sigma_y}{2} + \frac{\sigma_x - \sigma_y}{2} \cos 2\theta + \tau_{xy} \sin 2\theta$$

$$= \frac{5 + 0}{2} + \frac{5 - 0}{2} \cos(-60°) + 0 \sin(-60°)$$

$$= 3.75 \text{ MPa} \qquad \textbf{Ans.}$$

$$\tau_{x'y'} = -\frac{\sigma_x - \sigma_y}{2} \sin 2\theta + \tau_{xy} \cos 2\theta$$

$$= -\frac{5 - 0}{2} \sin(-60°) + 0 \cos(-60°)$$

$$= 2.17 \text{ MPa} \qquad \textbf{Ans.}$$

9–29. The 3-in. diameter shaft is supported by a smooth thrust bearing at A and a smooth journal bearing at B. Determine the principal stresses and maximum in-plane shear stress at a point on the outer surface of the shaft at section a–a.

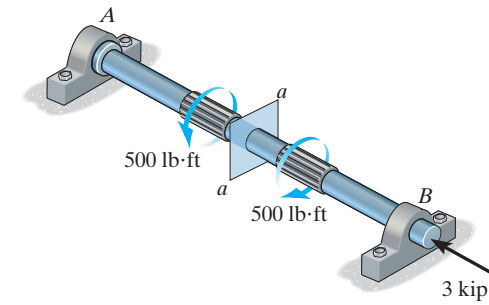

Internal Loadings: Consider the equilibrium of the free-body diagram of the shaft's right cut segment, Fig. a.

$$\Sigma F_x = 0; \qquad N + 3000 = 0 \qquad N = -3000 \text{ lb}$$

$$\Sigma M_x = 0; \qquad T + 500 = 0 \qquad T = -500 \text{ lb} \cdot \text{ft}$$

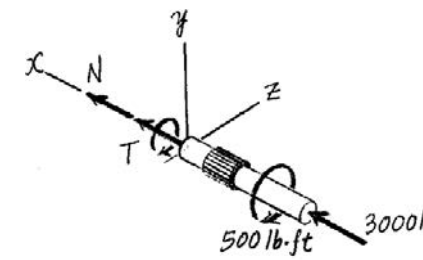

(a)

Section Properties: The cross-sectional area and the polar moment of inertia of the shaft's cross section are

$$A = \pi(1.5^2) = 2.25\pi \text{ in}^2$$

$$J = \frac{\pi}{2}(1.5^4) = 2.53125\pi \text{ in}^4$$

Normal and Shear Stress: The normal stress is contributed by the axial stress only. Thus,

$$\sigma = \frac{N}{A} = \frac{-3000}{2.25\pi} = -424.41 \text{ psi}$$

The shear stress is contributed by the torsional shear stress only.

$$\tau = \frac{Tc}{J} = \frac{500(12)(1.5)}{2.53125\pi} = 1131.77 \text{ psi}$$

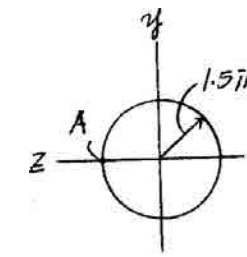

(b)

The state of stress at a point on the outer surface of the shaft, Fig. b, can be represented by the element shown in Fig. c.

In-Plane Principal Stress: $\sigma_x = -424.41$ psi, $\sigma_y = 0$, and $\tau_{xy} = -1131.77$ psi. We obtain,

$$\sigma_{1,2} = \frac{\sigma_x + \sigma_y}{2} \pm \sqrt{\left(\frac{\sigma_x - \sigma_y}{2}\right)^2 + \tau_{xy}^2}$$

$$= \frac{-424.41 + 0}{2} \pm \sqrt{\left(\frac{-424.41 - 0}{2}\right)^2 + (-1131.77)^2}$$

$$\sigma_1 = 939.28 \text{ psi} = 0.939 \text{ ksi} \quad \sigma_2 = -1363.70 \text{ psi} = -1.36 \text{ ksi} \qquad \textbf{Ans.}$$

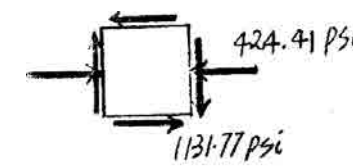

(c)

Maximum In-Plane Shear Stress:

$$\tau_{\substack{\max \\ \text{in-plane}}} = \sqrt{\left(\frac{\sigma_x - \sigma_y}{2}\right)^2 + \tau_{xy}^2} = \sqrt{\left(\frac{-424.41 - 0}{2}\right)^2 + (-1131.77)^2} = 1151.49 \text{ psi}$$

$$= 1.15 \text{ ksi} \qquad \textbf{Ans.}$$

Ans:
$\sigma_1 = 0.939$ ksi, $\sigma_2 = -1.36$ ksi, $\tau_{\substack{\max \\ \text{in-plane}}} = 1.15$ ksi

9–30. The state of stress at a point in a member is shown on the element. Determine the stress components acting on the plane AB.

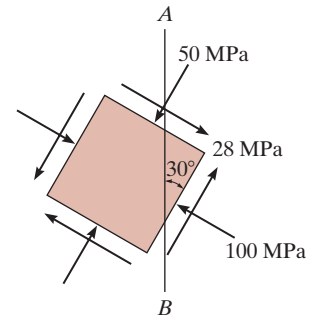

Construction of the Circle: In accordance with the sign convention, $\sigma_x = -50$ MPa, $\sigma_y = -100$ MPa, and $\tau_{xy} = -28$ MPa. Hence,

$$\sigma_{avg} = \frac{\sigma_x + \sigma_y}{2} = \frac{-50 + (-100)}{2} = -75.0 \text{ MPa}$$

The coordinates for reference points A and C are $A(-50, -28)$ and $C(-75.0, 0)$.

The radius of the circle is $R = \sqrt{(75.0 - 50)^2 + 28^2} = 37.54$ MPa.

Stress on the Rotated Element: The normal and shear stress components $(\sigma_{x'}$ and $\tau_{x'y'})$ are represented by the coordinates of point P on the circle

$$\sigma_{x'} = -75.0 + 37.54 \cos 71.76° = -63.3 \text{ MPa} \qquad \textbf{Ans.}$$

$$\tau_{x'y'} = 37.54 \sin 71.76° = 35.7 \text{ MPa} \qquad \textbf{Ans.}$$

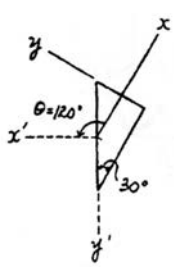

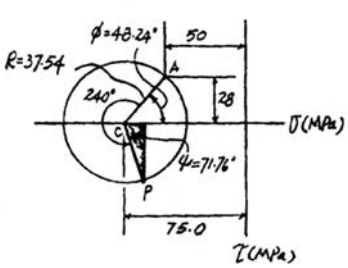

Ans:
$\sigma_{x'} = -63.3$ MPa, $\tau_{x'y'} = 35.7$ MPa

9–31. Determine the principal stress at point A on the cross section of the arm at section a–a. Specify the orientation of this state of stress and indicate the results on an element at the point.

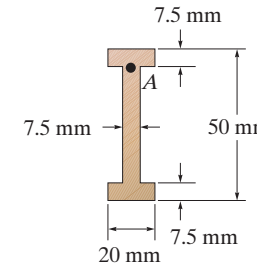

Section $a - a$

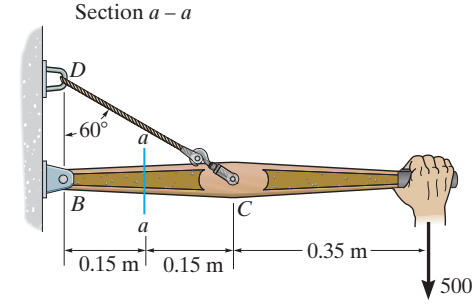

Support Reactions: Referring to the free-body diagram of the entire arm shown in Fig. a,

$$\Sigma M_B = 0;\ F_{CD}\sin 30°(0.3) - 500(0.65) = 0 \qquad F_{CD} = 2166.67\,\text{N}$$

$$\overset{+}{\rightarrow}\Sigma F_x = 0; \qquad B_x - 2166.67\cos 30° = 0 \qquad B_x = 1876.39\,\text{N}$$

$$+\uparrow\Sigma F_y = 0; \qquad 2166.67\sin 30° - 500 - B_y = 0 \qquad B_y = 583.33\,\text{N}$$

Internal Loadings: Consider the equilibrium of the free-body diagram of the arm's left segment, Fig. b.

$$\overset{+}{\rightarrow}\Sigma F_x = 0; \qquad 1876.39 - N = 0 \qquad N = 1876.39\,\text{N}$$

$$+\uparrow\Sigma F_y = 0; \qquad V - 583.33 = 0 \qquad V = 583.33\,\text{N}$$

$$+\Sigma M_O = 0; \qquad 583.33(0.15) - M = 0 \qquad M = 87.5\,\text{N}\cdot\text{m}$$

Section Properties: The cross - sectional area and the moment of inertia about the z axis of the arm's cross section are

$$A = 0.02(0.05) - 0.0125(0.035) = 0.5625\left(10^{-3}\right)\text{m}^2$$

$$I = \frac{1}{12}(0.02)\left(0.05^3\right) - \frac{1}{12}(0.0125)\left(0.035^3\right) = 0.16367\left(10^{-6}\right)\text{m}^4$$

Referring to Fig. c,

$$Q_A = \bar{y}'A' = 0.02125(0.0075)(0.02) = 3.1875\left(10^{-6}\right)\text{m}^3$$

Normal and Shear Stress: The normal stress is a combination of axial and bending stress. Thus,

$$\sigma_A = \frac{N}{A} + \frac{My_A}{I}$$

$$= \frac{-1876.39}{0.5625\left(10^{-3}\right)} + \frac{87.5(0.0175)}{0.16367\left(10^{-6}\right)} = 6.020\ \text{MPa}$$

The shear stress is caused by transverse shear stress.

$$\tau_A = \frac{VQ_A}{It} = \frac{583.33\left[3.1875\left(10^{-6}\right)\right]}{0.16367\left(10^{-6}\right)(0.0075)} = 1.515\ \text{MPa}$$

The state of stress at point A can be represented on the element shown in Fig. d.

In-Plane Principal Stress: $\sigma_x = 6.020$ MPa, $\sigma_y = 0$, and $\tau_{xy} = 1.515$ MPa. We have

$$\sigma_{1,2} = \frac{\sigma_x + \sigma_y}{2} \pm \sqrt{\left(\frac{\sigma_x - \sigma_y}{2}\right)^2 + \tau_{xy}{}^2}$$

$$= \frac{6.020 + 0}{2} \pm \sqrt{\left(\frac{6.020 - 0}{2}\right)^2 + 1.515^2}$$

$$\sigma_1 = 6.38\ \text{MPa} \qquad \sigma_2 = -0.360\ \text{MPa} \qquad \textbf{Ans}$$

9–31. Continued

Orientation of the Principal Plane:

$$\tan 2\theta_P = \frac{\tau_{xy}}{(\sigma_x - \sigma_y)/2} = \frac{1.515}{(6.020 - 0)/2} = 0.5032$$

$$\theta_p = 13.36° \text{ and } -76.64°$$

Substituting $\theta = 13.36°$ into

$$\sigma_{x'} = \frac{\sigma_x + \sigma_y}{2} + \frac{\sigma_x - \sigma_y}{2}\cos 2\theta + \tau_{xy}\sin 2\theta$$

$$= \frac{6.020 - 0}{2} + \frac{6.020 + 0}{2}\cos 26.71° + 1.515 \sin 26.71°$$

$$= 6.38 \text{ MPa} = \sigma_1$$

Thus, $(\theta_P)_1 = 13.4$ and $(\theta_P)_2 = -76.6°$ **Ans.**

The state of principal stresses is represented by the element shown in Fig. *e*.

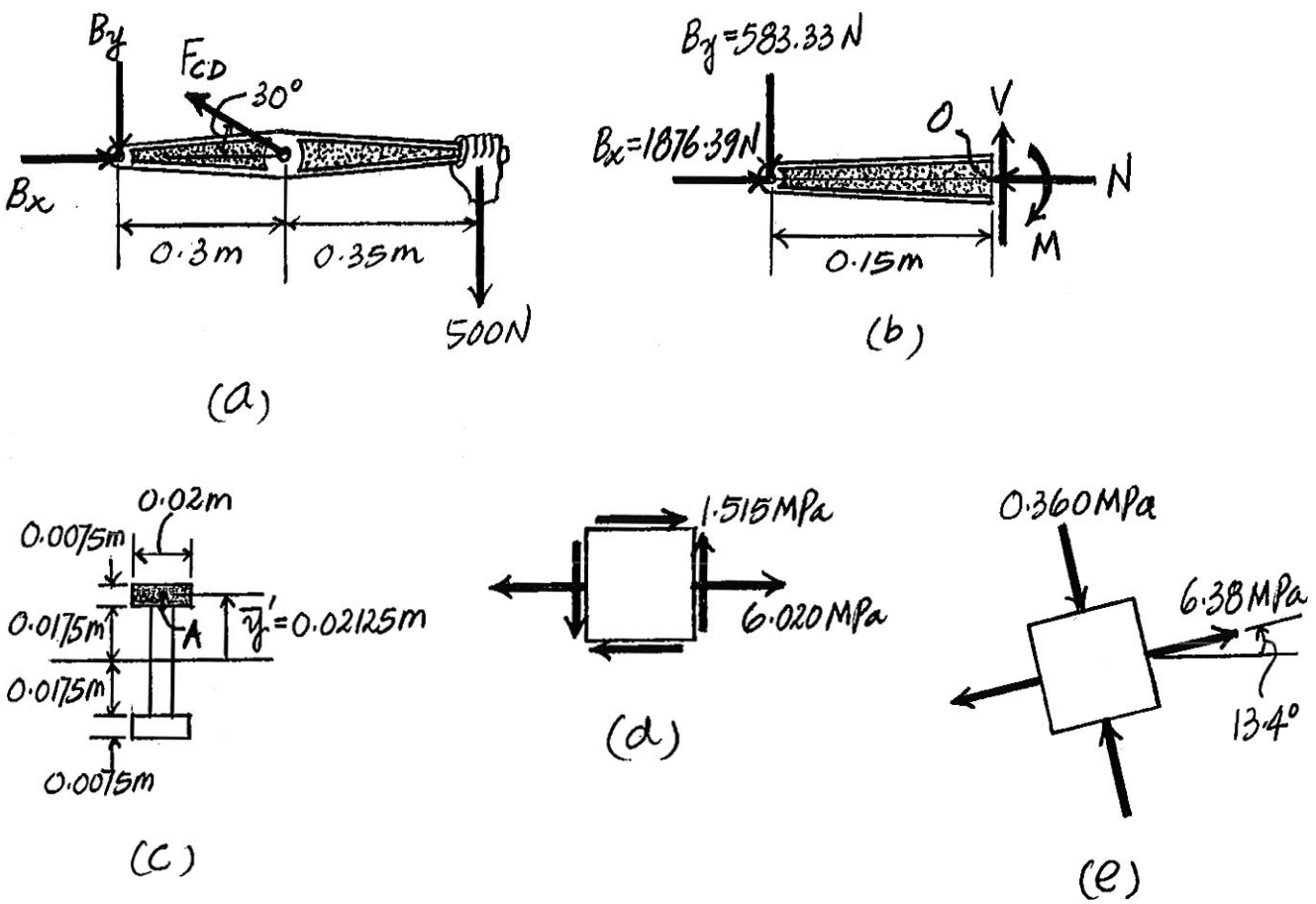

Ans:
$\sigma_1 = 6.38$ MPa, $\sigma_2 = -0.360$ MPa,
$\theta_{p1} = 13.4°$ and $\theta_{p2} = -76.6°$

***9–32.** Determine the maximum in-plane shear stress developed at point A on the cross section of the arm at section a–a. Specify the orientation of this state of stress and indicate the results on an element at the point.

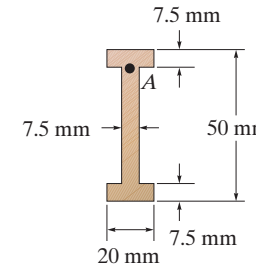

Section $a - a$

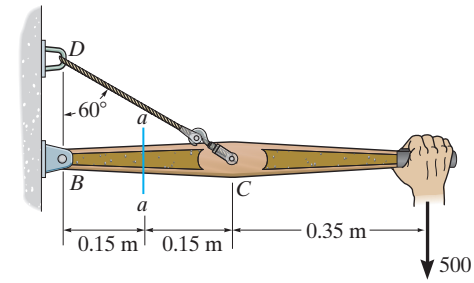

Support Reactions: Referring to the free-body diagram of the entire arm shown in Fig. a,

$$\Sigma M_B = 0;\ F_{CD}\sin 30°(0.3) - 500(0.65) = 0 \qquad F_{CD} = 2166.67\,\text{N}$$

$$\xrightarrow{+} \Sigma F_x = 0; \qquad B_x - 2166.67\cos 30° = 0 \qquad B_x = 1876.39\ \text{N}$$

$$+\uparrow \Sigma F_y = 0; \qquad 2166.67\sin 30° - 500 - B_y = 0 \qquad B_y = 583.33\ \text{N}$$

Internal Loadings: Considering the equilibrium of the free-body diagram of the arm's left cut segment, Fig. b,

$$\xrightarrow{+} \Sigma F_x = 0; \qquad 1876.39 - N = 0 \qquad N = 1876.39\ \text{N}$$

$$+\uparrow \Sigma F_y = 0; \qquad V - 583.33 = 0 \qquad V = 583.33\ \text{N}$$

$$+\Sigma M_O = 0; \qquad 583.33(0.15) - M = 0 \qquad M = 87.5\ \text{N}\cdot\text{m}$$

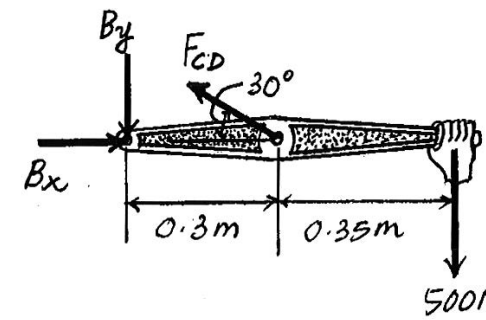

(a)

Section Properties: The cross-sectional area and the moment of inertia about the z axis of the arm's cross section are

$$A = 0.02(0.05) - 0.0125(0.035) = 0.5625\left(10^{-3}\right)\text{m}^2$$

$$I = \frac{1}{12}(0.02)\left(0.05^3\right) - \frac{1}{12}(0.0125)\left(0.035^3\right) = 0.16367\left(10^{-6}\right)\text{m}^4$$

Referring to Fig. b,

$$Q_A = \bar{y}'A' = 0.02125(0.0075)(0.02) = 3.1875\left(10^{-6}\right)\text{m}^3$$

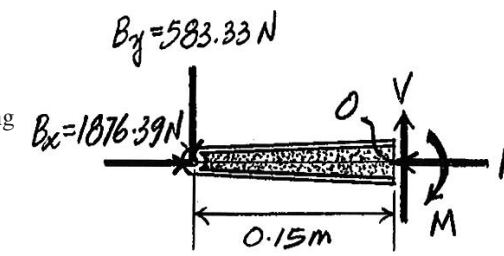

(b)

Normal and Shear Stress: The normal stress is a combination of axial and bending stress. Thus,

$$\sigma_A = \frac{N}{A} + \frac{My_A}{I}$$

$$= \frac{-1876.39}{0.5625\left(10^{-3}\right)} + \frac{87.5(0.0175)}{0.16367\left(10^{-6}\right)} = 6.020\ \text{MPa}$$

The shear stress is contributed only by transverse shear stress.

$$\tau_A = \frac{VQ_A}{It} = \frac{583.33\left[3.1875\left(10^{-6}\right)\right]}{0.16367\left(10^{-6}\right)(0.0075)} = 1.515\ \text{MPa}$$

Maximum In-Plane Shear Stress: $\sigma_x = 6.020$ MPa, $\sigma_y = 0$, and $\tau_{xy} = 1.515$ MPa.

$$\tau_{\substack{\max\\ \text{in-plane}}} = \sqrt{\left(\frac{\sigma_x - \sigma_y}{2}\right)^2 + \tau_{xy}{}^2} = \sqrt{\left(\frac{6.020 - 0}{2}\right)^2 + 1.515^2} = 3.37\ \text{MPa} \qquad \textbf{Ans.}$$

9–32. Continued

Orientation of the Plane of Maximum In-Plane Shear Stress:

$$\tan 2\theta_s = -\frac{(\sigma_x - \sigma_y)/2}{\tau_{xy}} = -\frac{(6.020 - 0)/2}{1.515} = -1.9871$$

$$\theta_s = -31.6° \text{ and } 58.4°$$ **Ans.**

Substituting $\theta = -31.6°$ into

$$\tau_{x'y'} = -\frac{\sigma_x - \sigma_y}{2}\sin 2\theta + \tau_{xy}\cos 2\theta$$

$$= -\frac{6.020 - 0}{2}\sin(-63.29°) + 1.515\cos(-63.29°)$$

$$= 3.37 \text{ MPa} = \tau_{\substack{\text{max}\\ \text{in-plane}}}$$

This indicates that $\tau_{\substack{\text{max}\\ \text{in-plane}}}$ is directed in the positive sense of the y' axis on the face of the element defined by $\theta_s = -31.6°$.

Average Normal Stress:

$$\sigma_{\text{avg}} = \frac{\sigma_x + \sigma_y}{2} = \frac{6.020 + 0}{2} = 3.01 \text{ MPa}$$ **Ans.**

The state of maximum in-plane shear stress is represented on the element shown in Fig. *e*.

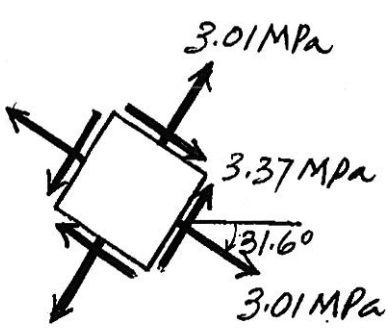

(e)

9–33. The clamp bears down on the smooth surface at E by tightening the bolt. If the tensile force in the bolt is 40 kN, determine the principal stress at points A and B and show the results on elements located at each of these points. The cross-sectional area at A and B is shown in the adjacent figure.

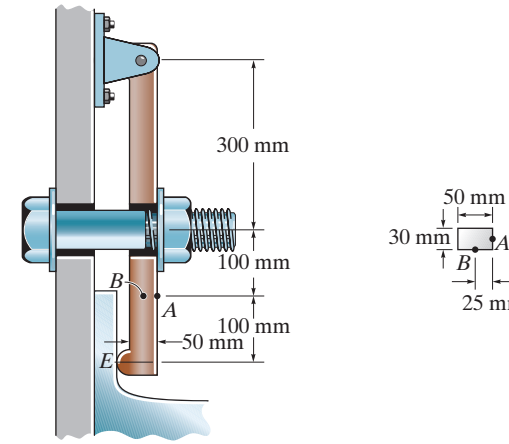

Support Reactions: As shown on FBD(a).

Internal Forces and Moment: As shown on FBD(b).

Section Properties:

$$I = \frac{1}{12}(0.03)\left(0.05^3\right) = 0.3125\left(10^{-6}\right)\text{ m}^4$$

$$Q_A = 0$$

$$Q_B = \bar{y}'A' = 0.0125(0.025)(0.03) = 9.375\left(10^{-6}\right)\text{ m}^3$$

Normal Stress: Applying the flexure formula $\sigma = -\dfrac{My}{I}$.

$$\sigma_A = -\frac{2.40(10^3)(0.025)}{0.3125(10^{-6})} = -192\text{ MPa}$$

$$\sigma_B = -\frac{2.40(10^3)(0)}{0.3125(10^{-6})} = 0$$

Shear Stress: Applying the shear formula $\tau = \dfrac{VQ}{It}$

$$\tau_A = \frac{24.0(10^3)(0)}{0.3125(10^{-6})(0.03)} = 0$$

$$\tau_B = \frac{24.0(10^3)\left[9.375(10^{-6})\right]}{0.3125(10^{-6})(0.03)} = 24.0\text{ MPa}$$

In-Plane Principal Stresses: $\sigma_x = 0, \sigma_y = -192$ MPa, and $\tau_{xy} = 0$ for point A. Since no shear stress acts on the element.

$$\sigma_1 = \sigma_x = 0 \qquad \textbf{Ans.}$$

$$\sigma_2 = \sigma_y = -192\text{ MPa} \qquad \textbf{Ans.}$$

$\sigma_x = \sigma_y = 0$ and $\tau_{xy} = -24.0$ MPa for point B. Applying Eq. 9-5

$$\sigma_{1,2} = \frac{\sigma_x + \sigma_y}{2} \pm \sqrt{\left(\frac{\sigma_x - \sigma_y}{2}\right)^2 + \tau_{xy}^2}$$

$$= 0 \pm \sqrt{0 + (-24.0)^2}$$

$$= 0 \pm 24.0$$

$$\sigma_1 = 24.0\text{ MPa} \qquad \sigma_2 = -24.0\text{ MPa} \qquad \textbf{Ans.}$$

9–33. Continued

Orientation of Principal Plane: Applying Eq. 9-4 for point B.

$$\tan 2\theta_p = \frac{\tau_{xy}}{(\sigma_x - \sigma_y)/2} = \frac{-24.0}{0} = -\infty$$

$$\theta_p = -45.0^\circ \qquad \text{and} \qquad 45.0^\circ$$

Substituting the results into Eq. 9-1 with $\theta = -45.0^\circ$ yields

$$\sigma_{x'} = \frac{\sigma_x + \sigma_y}{2} + \frac{\sigma_x - \sigma_y}{2}\cos 2\theta + \tau_{xy}\sin 2\theta$$

$$= 0 + 0 + [-24.0 \sin(-90.0^\circ)]$$

$$= 24.0 \text{ MPa} = \sigma_1$$

Hence,

$$\theta_{p1} = -45.0^\circ \qquad \theta_{p2} = 45.0^\circ$$ **Ans.**

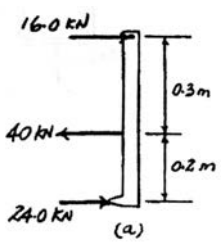

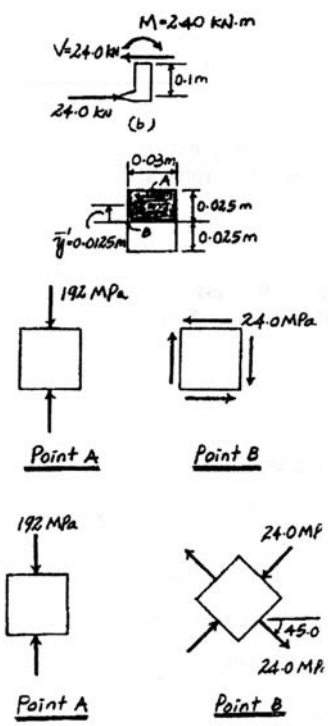

Ans:
Point A: $\sigma_1 = 0$, $\sigma_2 = -192$ MPa,
$\theta_{p1} = 0$, $\theta_{p2} = 90^\circ$,
Point B: $\sigma_1 = 24.0$ MPa, $\sigma_2 = -24.0$ MPa,
$\theta_{p1} = -45.0^\circ$, $\theta_{p2} = 45.0^\circ$

9–34. Determine the principal stress and the maximum in-plane shear stress that are developed at point A in the 2-in.-diameter shaft. Show the results on an element located at this point. The bearings only support vertical reactions.

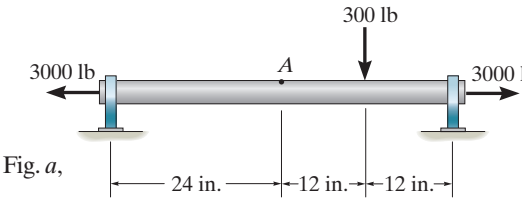

Using the method of sections and consider the FBD of shaft's left cut segment, Fig. *a*,

$\xrightarrow{+} \Sigma F_x = 0; \qquad N - 3000 = 0 \qquad N = 3000 \text{ lb}$

$+\uparrow \Sigma F_y = 0; \qquad 75 - V = 0 \qquad V = 75 \text{ lb}$

$\circlearrowleft + \Sigma M_C = 0; \qquad M - 75(24) = 0 \qquad M = 1800 \text{ lb} \cdot \text{in}$

$$A = \pi(1^2) = \pi \text{ in}^2 \qquad I = \frac{\pi}{4}(1^4) = \frac{\pi}{4} \text{ in}^4$$

Also,

$$Q_A = 0$$

The normal stress developed is the combination of axial and bending stress. Thus

$$\sigma = \frac{N}{A} \pm \frac{My}{I}$$

For point A, $y = C = 1$ in. Then

$$\sigma = \frac{3000}{\pi} - \frac{1800(1)}{\pi/4}$$

$$= -1.337\,(10^3) \text{ psi} = 1.337 \text{ ksi (c)}$$

The shear stress developed is due to transverse shear force. Thus,

$$\tau = \frac{VQ_A}{It} = 0$$

The state of stress at point A, can be represented by the element shown in Fig. *b*.

Here, $\sigma_x = -1.337$ ksi, $\sigma_y = 0$ is $\tau_{xy} = 0$. Since no shear stress acting on the element,

$$\sigma_1 = \sigma_y = 0 \qquad \sigma_2 = \sigma_x = -1.34 \text{ ksi} \qquad \textbf{Ans.}$$

Thus, the state of principal stress can also be represented by the element shown in Fig. *b*.

$$\tau_{\substack{\max \\ \text{in-plane}}} = \sqrt{\left(\frac{\sigma_x - \sigma_y}{2}\right)^2 + \tau_{xy}^2} = \sqrt{\left(\frac{-1.337 - 0}{2}\right)^2 + 0^2} = 0.668 \text{ ksi} - 668 \text{ psi} \quad \textbf{Ans.}$$

$$\tan 2\theta_s = -\frac{(\sigma_x - \sigma_y)/2}{\tau_{xy}} = -\frac{(-1.337 - 0)/2}{0} = \infty$$

$$\theta_s = 45° \quad \text{and} \quad -45° \qquad \textbf{Ans.}$$

Substitute $\theta = 45°$,

$$\tau_{x'y'} = -\frac{\sigma_x - \sigma_y}{2} \sin 2\theta + \tau_{xy} \cos 2\theta$$

$$= -\frac{-1.337 - 0}{2} \sin 90° + 0$$

$$= 0.668 \text{ ksi} = 668 \text{ psi} = \tau_{\substack{\max \\ \text{in-plane}}}$$

9–34. Continued

This indicates that $\tau_{\substack{max \\ in\text{-}plane}}$ acts toward the positive sense of y' axis at the face of the element defined by $\theta_s = 45°$.

Average Normal Stress.

The state of maximum in - plane shear stress can be represented by the element shown in Fig. *c*.

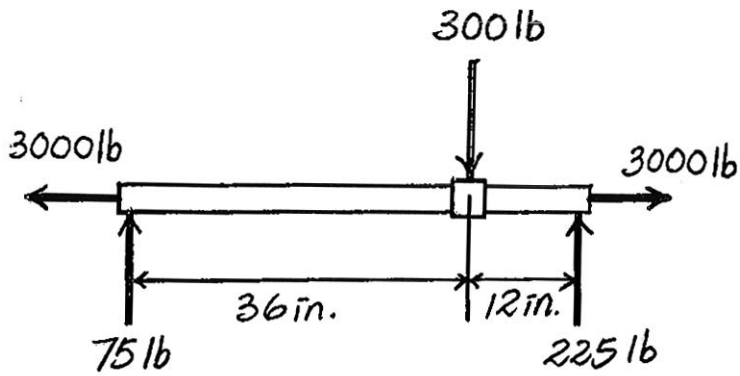

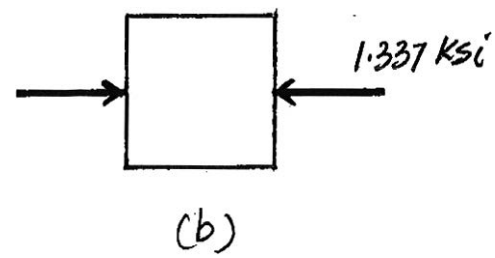

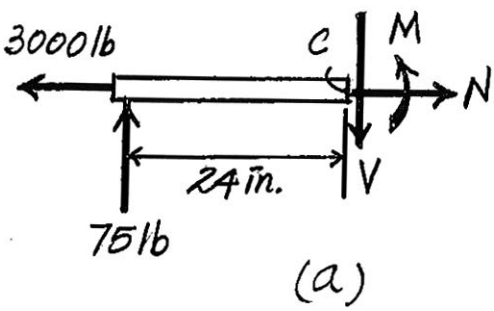

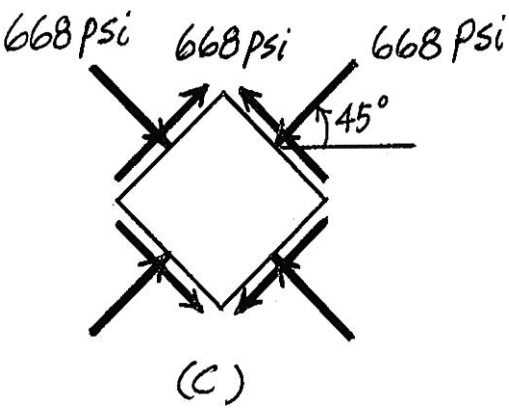

Ans:
$\sigma_1 = 0, \sigma_2 = -1.34$ ksi, $\tau_{\substack{max \\ in\text{-}plane}} = 668$ psi,
$\theta_s = 45°$ and $-45°$

9–35. The square steel plate has a thickness of 10 mm and is subjected to the edge loading shown. Determine the maximum in-plane shear stress and the average normal stress developed in the steel.

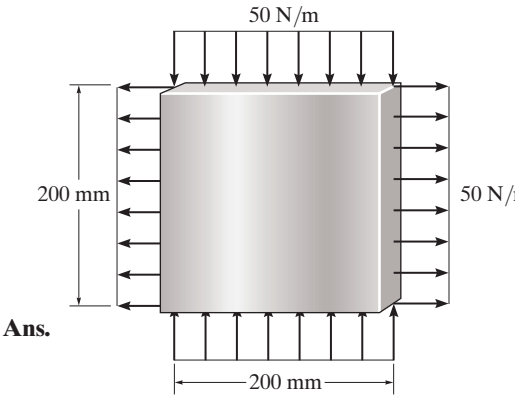

$\sigma_x = 5 \text{ kPa} \qquad \sigma_y = -5 \text{ kPa} \qquad \tau_{xy} = 0$

$$\tau_{\substack{\max \\ \text{in-plane}}} = \sqrt{\left(\frac{\sigma_x - \sigma_y}{2}\right)^2 + \tau_{xy}^2}$$

$$= \sqrt{\left(\frac{5 + 5}{2}\right)^2 + 0} = 5 \text{ kPa} \qquad \textbf{Ans.}$$

$$\sigma_{\text{avg}} = \frac{\sigma_x + \sigma_y}{3} = \frac{5 - 5}{2} = 0 \qquad \textbf{Ans.}$$

Note:

$$\tan 2\theta_s = \frac{-(\sigma_x - \sigma_y)/2}{\tau_{xy}}$$

$$\tan 2\theta_s = \frac{-(5 + 5)/2}{0} = \infty$$

$$\theta_s = 45°$$

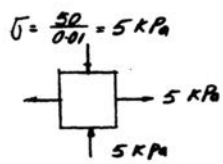

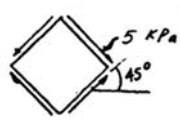

Ans:
$\tau_{\substack{\max \\ \text{in-plane}}} = 5 \text{ kPa}, \sigma_{\text{avg}} = 0$

***9–36.** The square steel plate has a thickness of 0.5 in. and is subjected to the edge loading shown. Determine the principal stresses developed in the steel.

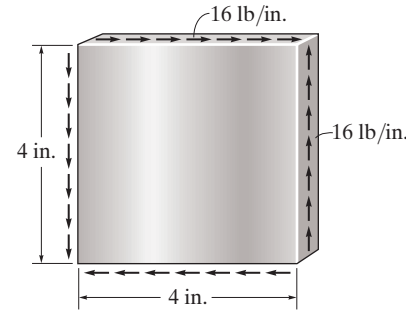

$\sigma_x = 0 \qquad \sigma_y = 0 \qquad \tau_{xy} = 32 \text{ psi}$

$$\sigma_{1,2} = \frac{\sigma_x + \sigma_y}{2} \pm \sqrt{\left(\frac{\sigma_x - \sigma_y}{2}\right)^2 + \tau_{xy}^2}$$

$$= 0 \pm \sqrt{0 + 32^2}$$

$\sigma_1 = 32 \text{ psi}$ **Ans.**

$\sigma_2 = -32 \text{ psi}$ **Ans.**

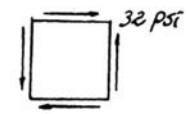

Note:

$$\tan 2\theta_p = \frac{\tau_{xy}}{(\sigma_x - \sigma_y)/2} = \frac{32}{0} = \infty$$

$$\theta_p = 45°$$

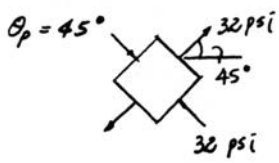

9–37. The shaft has a diameter d and is subjected to the loadings shown. Determine the principal stress and the maximum in-plane shear stress that is developed at point A. The bearings only support vertical reactions.

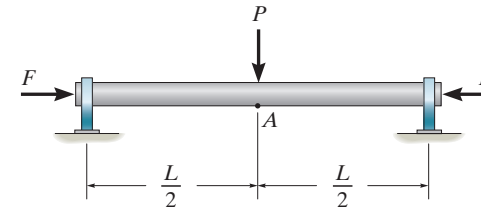

Support Reactions: As shown on FBD(a).

Internal Forces and Moment: As shown on FBD(b).

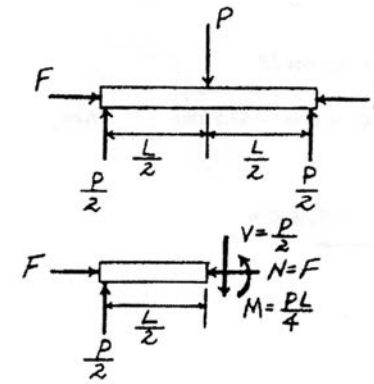

Section Properties:

$$A = \frac{\pi}{4}d^2 \qquad I = \frac{\pi}{4}\left(\frac{d}{2}\right)^4 = \frac{\pi}{64}d^4 \qquad Q_A = 0$$

Normal Stress:

$$\sigma = \frac{N}{A} \pm \frac{Mc}{I}$$

$$= \frac{-F}{\frac{\pi}{4}d^2} \pm \frac{\frac{PL}{4}\left(\frac{d}{2}\right)}{\frac{\pi}{64}d^4}$$

$$\sigma_A = \frac{4}{\pi d^2}\left(\frac{2PL}{d} - F\right)$$

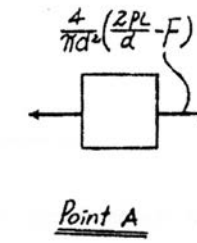

Shear Stress: Since $Q_A = 0, \tau_A = 0$

In-Plane Principal Stress: $\sigma_x = \dfrac{4}{\pi d^2}\left(\dfrac{2PL}{d} - F\right)$.

$\sigma_y = 0$ and $\tau_{xy} = 0$ for point A. Since no shear stress acts on the element,

$$\sigma_1 = \sigma_x = \frac{4}{\pi d^2}\left(\frac{2PL}{d} - F\right) \qquad \textbf{Ans.}$$

$$\sigma_2 = \sigma_y = 0 \qquad \textbf{Ans.}$$

Maximum In-Plane Shear Stress: Applying Eq. 9-7 for point A,

$$\tau_{\substack{\max \\ \text{in-plane}}} = \sqrt{\left(\frac{\sigma_x - \sigma_y}{2}\right)^2 + \tau_{xy}^2}$$

$$= \sqrt{\left(\frac{\frac{4}{\pi d^2}\left(\frac{2PL}{d} - F\right) - 0}{2}\right)^2 + 0}$$

$$= \frac{2}{\pi d^2}\left(\frac{2PL}{d} - F\right) \qquad \textbf{Ans.}$$

Ans:

$\sigma_1 = \dfrac{4}{\pi d^2}\left(\dfrac{2PL}{d} - F\right), \sigma_2 = 0,$

$\tau_{\substack{\max \\ \text{in-plane}}} = \dfrac{2}{\pi d^2}\left(\dfrac{2PL}{d} - F\right)$

9–38. A paper tube is formed by rolling a paper strip in a spiral and then gluing the edges together as shown. Determine the shear stress acting along the seam, which is at 30° from the vertical, when the tube is subjected to an axial force of 10 N. The paper is 1 mm thick and the tube has an outer diameter of 30 mm.

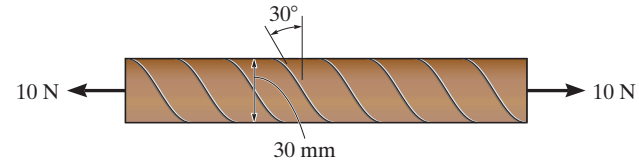

$$\sigma = \frac{P}{A} = \frac{10}{\frac{\pi}{4}(0.03^2 - 0.028^2)} = 109.76 \text{ kPa}$$

$$\sigma_x = 109.76 \text{ kPa} \qquad \sigma_y = 0 \qquad \tau_{xy} = 0 \qquad \theta = 30°$$

$$\tau_{x'y'} = -\frac{\sigma_x - \sigma_y}{2}\sin 2\theta + \tau_{xy}\cos 2\theta$$

$$= -\frac{109.76 - 0}{2}\sin 60° + 0 = -47.5 \text{ kPa}$$ **Ans.**

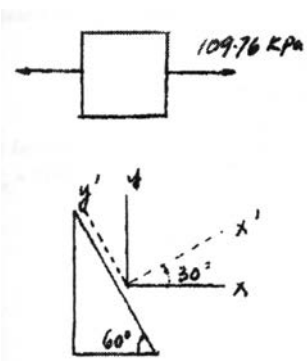

Ans:
$\tau_{x'y'} = -47.5$ kPa

9–39. Solve Prob. 9–38 for the normal stress acting perpendicular to the seam.

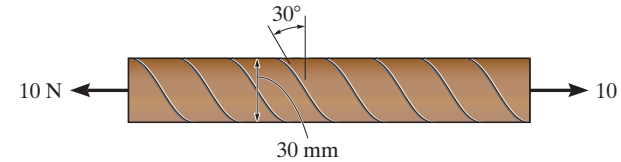

$$\sigma = \frac{P}{A} = \frac{10}{\frac{\pi}{4}(0.03^2 - 0.028^2)} = 109.76 \text{ kPa}$$

$$\sigma_{x'} = \frac{\sigma_x + \sigma_y}{2} + \frac{\sigma_x - \sigma_y}{2}\cos 2\theta + \tau_{xy}\sin 2\theta$$

$$= \frac{109.76 + 0}{2} + \frac{109.76 - 0}{2}\cos(60°) + 0 = 82.3 \text{ kPa}$$ **Ans.**

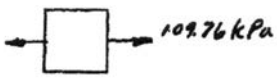

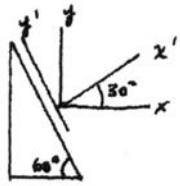

Ans:
$\sigma_{x'} = 82.3$ kPa

***9–40.** The wide-flange beam is subjected to the 50-kN force. Determine the principal stresses in the beam at point A located on the *web* at the bottom of the upper flange. Although it is not very accurate, use the shear formula to calculate the shear stress.

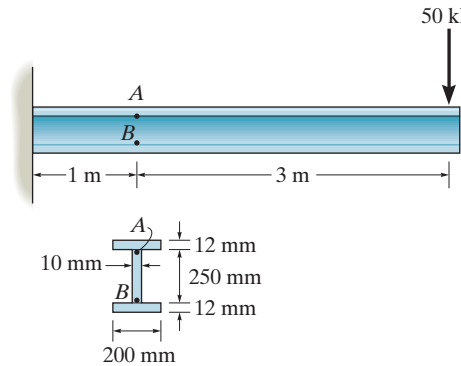

$$I = \frac{1}{12}(0.2)(0.274)^3 - \frac{1}{12}(0.19)(0.25)^3 = 95.451233(10^{-6})\ \text{m}^4$$

$$Q_A = (0.131)(0.012)(0.2) = 0.3144(10^{-3})\ \text{m}^3$$

$$\sigma_A = \frac{My}{I} = \frac{150(10^3)(0.125)}{95.451233(10^{-6})} = 196.43\ \text{MPa}$$

$$\tau_A = \frac{VQ_A}{It} = \frac{50(10^3)(0.3144)(10^{-3})}{95.451233(10^{-6})(0.01)} = 16.47\ \text{MPa}$$

$$\sigma_x = 196.43\ \text{MPa} \qquad \sigma_y = 0 \qquad \tau_{xy} = -16.47\ \text{MPa}$$

$$\sigma_{1,2} = \frac{\sigma_x + \sigma_y}{2} \pm \sqrt{\left(\frac{\sigma_x - \sigma_y}{2}\right)^2 + \tau_{xy}^2}$$

$$= \frac{196.43 + 0}{2} \pm \sqrt{\left(\frac{196.43 - 0}{2}\right)^2 + (-16.47)^2}$$

$\sigma_1 = 198\ \text{MPa}$ **Ans.**

$\sigma_2 = -1.37\ \text{MPa}$ **Ans.**

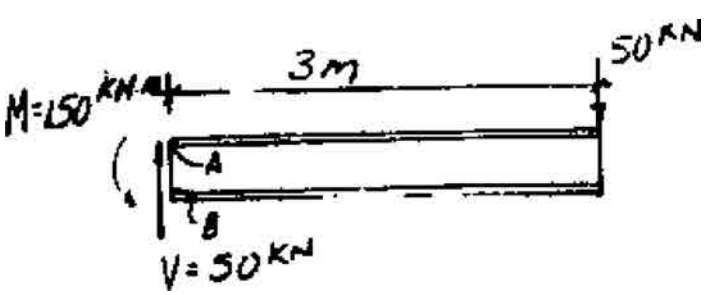

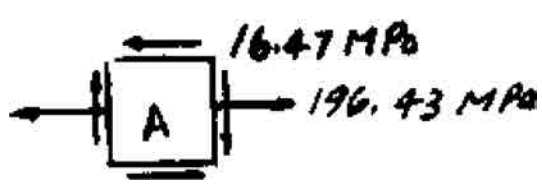

9–41. Solve Prob. 9–40 for point B located on the *web* at the top of the bottom flange.

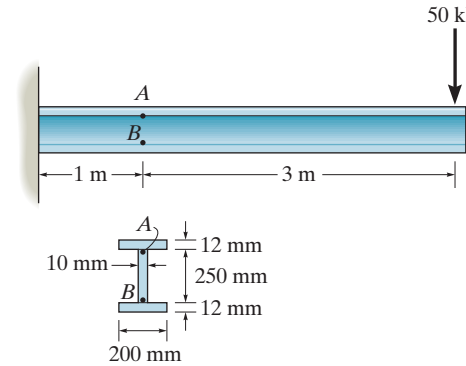

$$I = \frac{1}{12}(0.2)(0.247)^3 - \frac{1}{12}(0.19)(0.25)^3 = 95.451233(10^{-6})\ \text{m}^4$$

$$Q_B = (0.131)(0.012)(0.2) = 0.3144(10^{-3})$$

$$\sigma_B = -\frac{My}{I} = -\frac{150(10^3)(0.125)}{95.451233(10^{-6})} = -196.43\ \text{MPa}$$

$$\tau_B = \frac{VQ_B}{It} = \frac{50(10^3)(0.3144)(10^{-3})}{95.451233(10^{-6})(0.01)} = 16.47\ \text{MPa}$$

$$\sigma_x = -196.43\ \text{MPa} \qquad \sigma_y = 0 \qquad \tau_{xy} = -16.47\ \text{MPa}$$

$$\sigma_{1,2} = \frac{\sigma_x + \sigma_y}{2} \pm \sqrt{\left(\frac{\sigma_x - \sigma_y}{2}\right)^2 + \tau_{xy}^2}$$

$$= \frac{-196.43 + 0}{2} \pm \sqrt{\left(\frac{-196.43 - 0}{2}\right)^2 + (-16.47)^2}$$

$\sigma_1 = 1.37$ MPa **Ans.**

$\sigma_2 = -198$ MPa **Ans.**

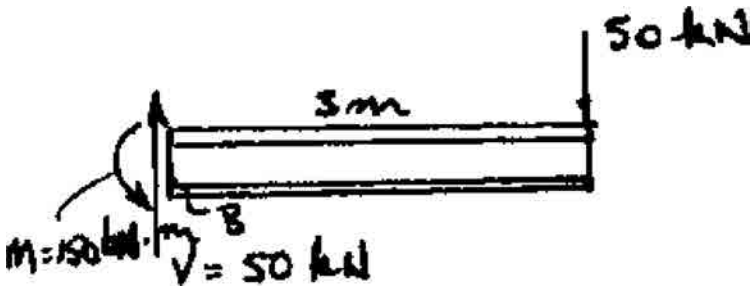

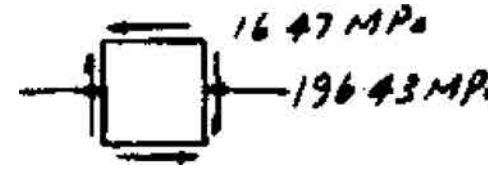

Ans:
$\sigma_1 = 1.37$ MPa, $\sigma_2 = -198$ MPa

9–42. The drill pipe has an outer diameter of 3 in., a wall thickness of 0.25 in., and a weight of 50 lb/ft. If it is subjected to a torque and axial load as shown, determine (a) the principal stresses and (b) the maximum in-plane shear stress at a point on its surface at section *a*.

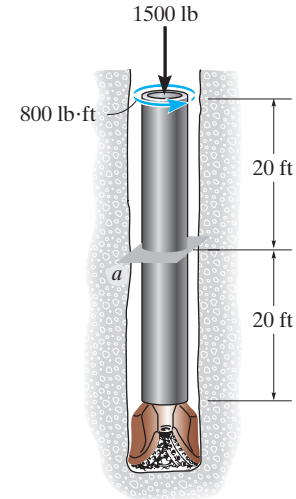

Internal Forces and Torque: As shown on FBD(a).

Section Properties:

$$A = \frac{\pi}{4}\left(3^2 - 2.5^2\right) = 0.6875\pi \text{ in}^2$$

$$J = \frac{\pi}{2}\left(1.5^4 - 1.25^4\right) = 4.1172 \text{ in}^4$$

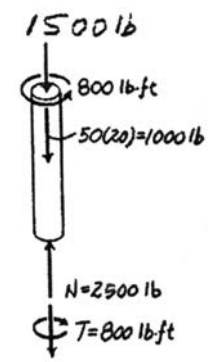

Normal Stress:

$$\sigma = \frac{N}{A} = \frac{-2500}{0.6875\pi} = -1157.5 \text{ psi}$$

Shear Stress: Applying the torsion formula.

$$\tau = \frac{T\,c}{J} = \frac{800(12)(1.5)}{4.1172} = 3497.5 \text{ psi}$$

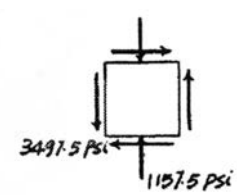

a) **In-Plane Principal Stresses:** $\sigma_x = 0$, $\sigma_y = -1157.5$ psi and $\tau_{xy} = 3497.5$ psi for any point on the shaft's surface. Applying Eq. 9-5,

$$\sigma_{1,2} = \frac{\sigma_x + \sigma_y}{2} \pm \sqrt{\left(\frac{\sigma_x - \sigma_y}{2}\right)^2 + \tau_{xy}^2}$$

$$= \frac{0 + (-1157.5)}{2} \pm \sqrt{\left(\frac{0 - (-1157.5)}{2}\right)^2 + (3497.5)^2}$$

$$= -578.75 \pm 3545.08$$

$$\sigma_1 = 2966 \text{ psi} = 2.97 \text{ ksi} \qquad \textbf{Ans.}$$

$$\sigma_2 = -4124 \text{ psi} = -4.12 \text{ ksi} \qquad \textbf{Ans.}$$

b) **Maximum In-Plane Shear Stress:** Applying Eq. 9–7,

$$\tau_{\substack{\max \\ \text{in-plane}}} = \sqrt{\left(\frac{\sigma_x - \sigma_y}{2}\right)^2 + \tau_{xy}^2}$$

$$= \sqrt{\left(\frac{0 - (-1157.5)}{2}\right)^2 + (3497.5)^2}$$

$$= 3545 \text{ psi} = 3.55 \text{ ksi} \qquad \textbf{Ans.}$$

Ans:
$\sigma_1 = 2.97$ ksi, $\sigma_2 = -4.12$ ksi, $\tau_{\substack{\max \\ \text{in-plane}}} = 3.55$ ksi

9–43. The nose wheel of the plane is subjected to a design load of 12 kN. Determine the principal stresses acting on the aluminum wheel support at point A.

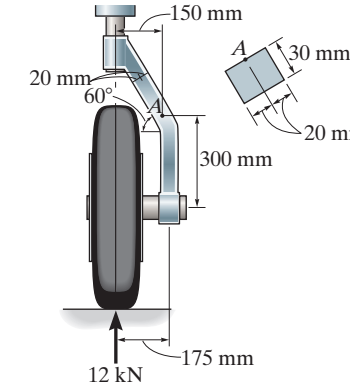

$\nwarrow + \Sigma F_y = 0; \quad 12 \cos 30° - N = 0; \quad N = 10.392 \text{ kN}$

$\swarrow + \Sigma F_x = 0; \quad -12 \sin 30° + V = 0; \quad V = 6 \text{ kN}$

$\circlearrowleft + \Sigma M_A = 0; \quad M - (12)(0.150) = 0; \quad M = 1.80 \text{ kN} \cdot \text{m}$

$$\sigma = \frac{P}{A} = \frac{10.392(10^3)}{(0.03)(0.04)} = 8.66 \text{ MPa (C)}$$

$$\tau = \frac{VQ}{It} = \frac{6(10^3)(0.01)(0.03)(0.02)}{\frac{1}{12}(0.03)(0.04)^3(0.03)} = 7.50 \text{ MPa}$$

$$\sigma_{1,2} = \frac{\sigma_x + \sigma_y}{2} \pm \sqrt{\left(\frac{\sigma_x - \sigma_y}{2}\right)^2 + \tau_{xy}^2}$$

$$= \frac{-8.66 + 0}{2} \pm \sqrt{\left(\frac{-8.66 - 0}{2}\right)^2 + (7.50)^2}$$

$$= -4.33 \pm 8.66025$$

$\sigma_2 = -12.990 = -13.0 \text{ MPa}$ **Ans.**

$\sigma_1 = 4.33 \text{ MPa}$ **Ans.**

Ans:
$\sigma_1 = 4.33 \text{ MPa}, \sigma_2 = -13.0 \text{ MPa}$

***9–44.** Solve Prob. 9–3 using Mohr's circle.

$$\frac{\sigma_x + \sigma_y}{2} = \frac{-650 + 400}{2} = -125$$

$A(-650, 0)$ $B(400, 0)$ $C(-125, 0)$

$R = CA = \ = 650 - 125 = 525$

$\sigma_{x'} = -125 - 525 \cos 60° = -388$ psi **Ans.**

$\tau_{x'y'} = 525 \sin 60° = 455$ psi **Ans.**

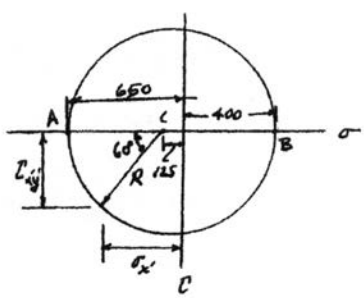

9–45. Solve Prob. 9–6 using Mohr's circle.

$\sigma_x = 80$ MPa $\quad \sigma_y = 0 \quad \tau_{xy} = 45$ MPa $\quad \theta = 135° \quad A(80, 45)$

$$\frac{\sigma_x + \sigma_y}{2} = \frac{80 + 0}{2} = 40 \qquad C(40, 0)$$

$$R = \sqrt{(80 - 40)^2 + 45^2} = 60.208$$

$$\phi = \tan^{-1}\left(\frac{45}{80 - 40}\right) = 48.366° \text{ below the } x\text{-axis.}$$

Coordinates of the rotated point: a counterclockwise rotation of $2\theta = 270°$ is the same as a clockwise rotation of 90°, to $\psi = 48.366° + 90° = 41.634°$ below the negative x-axis.

$\sigma_{x'} = 40 - 60.208 \cos(41.634°) = -5$ MPa **Ans.**

$\tau_{x'y'} = 60.208 \sin(41.634°) = 40$ MPa **Ans.**

Ans:
$\sigma_{x'} = -5$ MPa, $\tau_{x'y'} = 40$ MPa

9–46. Solve Prob. 9–14 using Mohr's circle.

$$\frac{\sigma_x + \sigma_y}{2} = \frac{-30 + 0}{2} = -15$$

$$R = \sqrt{(30 - 15)^2 + (12)^2} = 19.21 \text{ ksi}$$

$\sigma_1 = 19.21 - 15 = 4.21$ ksi **Ans.**

$\sigma_2 = -19.21 - 15 = -34.2$ ksi **Ans.**

$2\theta_{P2} = \tan^{-1}\dfrac{12}{(30 - 15)}; \qquad \theta_{P2} = 19.3°$ **Ans.**

$\tau_{\substack{\text{max}\\ \text{in-plane}}} = R = 19.2$ ksi **Ans.**

$\sigma_{\text{avg}} = -15$ ksi **Ans.**

$2\theta_s = \tan^{-1}\dfrac{12}{(30 - 15)} + 90°; \qquad \theta_s = 64.3°$ **Ans.**

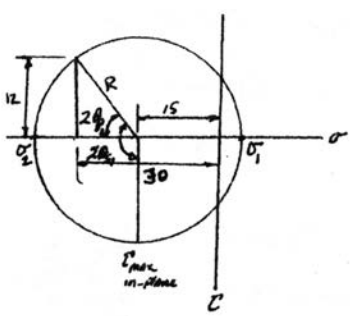

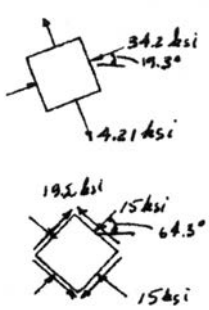

Ans:
$\sigma_1 = 4.21$ ksi, $\sigma_2 = -34.2$ ksi,
$\theta_{p2} = 19.3°$ and $\theta_{p1} = -70.7°$,
$\tau_{\substack{\text{max}\\ \text{in-plane}}} = 19.2$ ksi, $\sigma_{\text{avg}} = -15$ ksi, $\theta_s = 64.3°$

9–47. Solve Prob. 9–10 using Mohr's circle.

Construction of the Circle: $\theta = -60°$, $\sigma_x = 150$ MPa, $\sigma_y = 100$ MPa, $\tau_{xy} = 75$ MPa. Thus

$$\sigma_{avg} = \frac{\sigma_x + \sigma_y}{2} = \frac{150 + 100}{2} = 125 \text{ MPa}$$

The coordinates of the reference point A and center C of the circle are

$$A(150, 75) \qquad C(125, 0)$$

Thus, the radius of the circle is

$$R = CA = \sqrt{(150 - 125)^2 + (75)^2} = 79.06 \text{ MPa}$$

Normal and Shear Stress on Rotated Element: Here $\theta = 60°$ clockwise. By rotating the radial line CA clockwise $2\theta = 120°$, it coincides with the radial line OP and the coordinates of reference point $P(\sigma_{x'}, \tau_{x'y'})$ represent the normal and shear stresses on the face of the element defined by $\theta = -60°$, $\sigma_{y'}$ can be determined by calculating the coordinates of point Q. From the geometry of the circle, Fig. (a).

$$\sin\alpha = \frac{75}{79.06}, \quad \alpha = 71.57°, \quad \beta = 120° + 71.57° - 180° = 11.57°$$

$\sigma_{x'} = 125 - 79.06 \cos 11.57° = 47.5$ MPa **Ans.**

$\tau_{x'y'} = -79.06 \sin 11.57° = -15.8$ MPa **Ans.**

$\sigma_{y'} = 125 + 79.06 \cos 11.57° = 202$ MPa **Ans.**

The results are shown in Fig. (b).

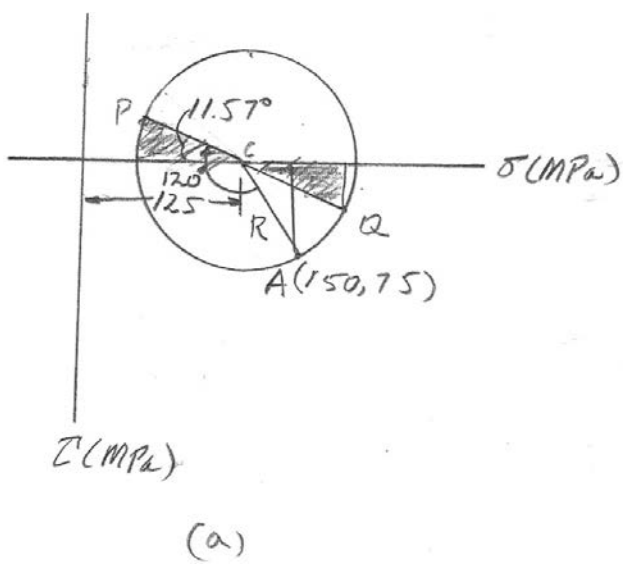

(a)

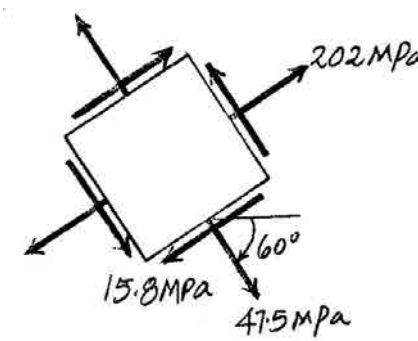

(b)

Ans:
$\sigma_{x'} = 47.5$ MPa, $\tau_{x'y'} = -15.8$ MPa,
$\sigma_{y'} = 202$ MPa

***9–48.** Solve Prob. 9–12 using Mohr's circle.

$$\frac{\sigma_x + \sigma_y}{2} = \frac{-10 + 0}{2} = -5 \text{ ksi}$$

$$R = \sqrt{(10 - 5)^2 + (16)^2} = 16.763 \text{ ksi}$$

$$\phi = \tan^{-1}\frac{16}{(10 - 5)} = 72.646°$$

$$\alpha = 100 - 72.646 = 27.354°$$

$\sigma_{x'} = -5 - 16.763 \cos 27.354° = -19.9$ ksi **Ans.**

$\tau_{x'y'} = 16.763 \sin 27.354° = 7.70$ ksi **Ans.**

$\sigma_{y'} = 16.763 \cos 27.354° - 5 = 9.89$ ksi

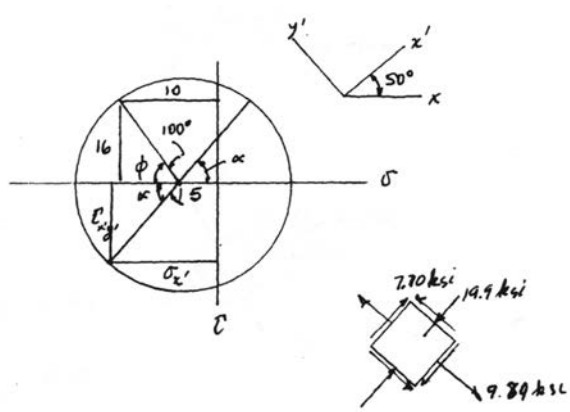

9–49. Solve Prob. 9–16 using Mohr's circle.

Construction of Circle: $\sigma_x = 50$ MPa, $\sigma_y = 0$, $\tau_{xy} = -15$ MPa. Thus,

$$\sigma_{avg} = \frac{\sigma_x + \sigma_y}{2} = \frac{50 + 0}{2} = 25 \text{ MPa} \qquad \textbf{Ans.}$$

The coordinates of reference point A and center C of the circle are

$$A(50, -15) \qquad C(25, 0)$$

Thus, the radius of the circle is

$$R = CA = \sqrt{(50 - 25)^2 + (-15)^2} = 29.15 \text{ MPa}$$

See Fig. (a).

a) **Principal Stress:**

$$\sigma_1 = 54.2 \text{ MPa}, \qquad \sigma_2 = -4.15 \text{ MPa} \qquad \textbf{Ans.}$$

$$\sin 2\alpha = \frac{15}{29.15}, \qquad \alpha = 15.5° \qquad \textbf{Ans.}$$

See Fig. (b).

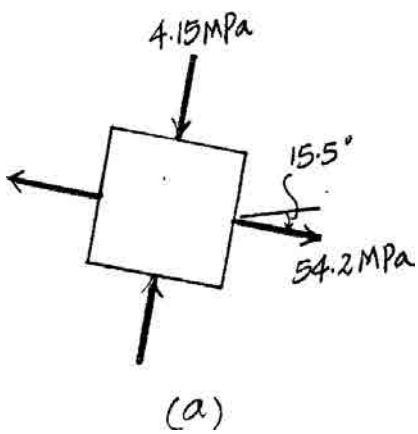

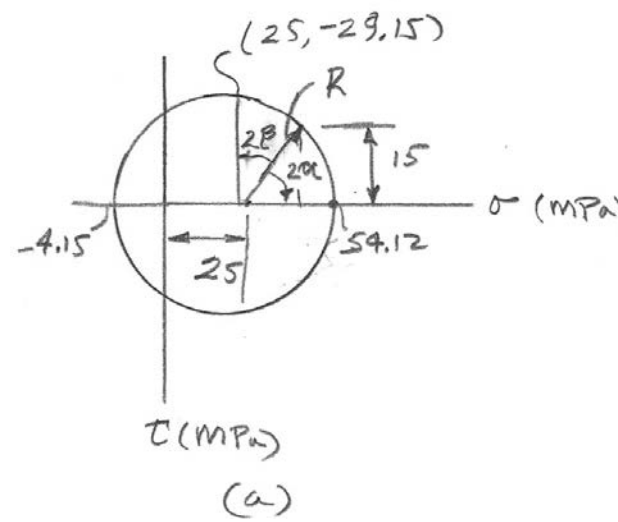

Ans:
$\sigma_1 = 54.2$ MPa, $\sigma_2 = -4.15$ MPa, $\theta_p = -15.5°$
$\sigma_{avg} = 25$ MPa, $\tau_{\substack{max \\ in\text{-}plane}} = 29.2$ MPa, $\theta_s = 29.5°$

9–50. Mohr's circle for the state of stress in Fig 9–15*a* is shown in Fig 9–15*b*. Show that finding the coordinates of point $P(\sigma_{x'}, \tau_{x'y'})$ on the circle gives the same value as the stress-transformation Eqs. 9–1 and 9–2.

$$A(\sigma_x, \tau_{xy}) \qquad B(\sigma_y, -\tau_{xy}) \qquad C\left(\left(\frac{\sigma_x + \sigma_y}{2}\right), 0\right)$$

$$R = \sqrt{\left[\sigma_x - \left(\frac{\sigma_x + \sigma_y}{2}\right)\right]^2 + \tau_{xy}^2} = \sqrt{\left(\frac{\sigma_x - \sigma_y}{2}\right)^2 + \tau_{xy}^2}$$

$$\sigma_x' = \frac{\sigma_x + \sigma_y}{2} + \sqrt{\left(\frac{\sigma_x - \sigma_y}{2}\right)^2 + \tau_{xy}^2} \cos\theta' \qquad \textbf{(1)}$$

$$\theta' = 2\theta_P - 2\theta$$

$$\cos(2\theta_P - 2\theta) = \cos 2\theta_P \cos 2\theta + \sin 2\theta_p \sin 2\theta \qquad \textbf{(2)}$$

From the circle:

$$\cos 2\theta_P = \frac{\sigma_x - \frac{\sigma_x + \sigma_y}{2}}{\sqrt{\left(\frac{\sigma_x - \sigma_y}{2}\right)^2 + \tau_{xy}^2}} \qquad \textbf{(3)}$$

$$\sin 2\theta_P = \frac{\tau_{xy}}{\sqrt{\left(\frac{\sigma_x - \sigma_y}{2}\right)^2 + \tau_{xy}^2}} \qquad \textbf{(4)}$$

Substitute Eq. (2), (3) and into Eq. (1)

$$\sigma_{x'} = \frac{\sigma_x + \sigma_y}{2} + \frac{\sigma_x - \sigma_y}{2} \cos 2\theta + \tau_{xy} \sin 2\theta \qquad \textbf{QED}$$

$$\tau_{x'y'} = \sqrt{\left(\frac{\sigma_x - \sigma_y}{2}\right)^2 + \tau_{xy}^2} \sin\theta' \qquad \textbf{(5)}$$

$$\sin\theta' = \sin(2\theta_P - 2\theta)$$

$$= \sin 2\theta_P \cos 2\theta - \sin 2\theta \cos 2\theta_P \qquad \textbf{(6)}$$

Substitute Eq. (3), (4), (6) into Eq. (5),

$$\tau_{x'y'} = -\frac{\sigma_x - \sigma_y}{2} \sin 2\theta + \tau_{xy} \cos 2\theta \qquad \textbf{QED}$$

9–51. Determine the equivalent state of stress if an element is oriented 45° clockwise from the element shown.

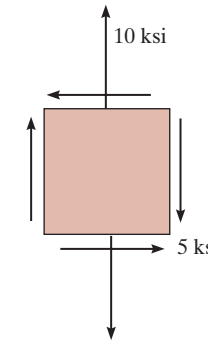

Construction of the Circle: $\sigma_x = 0$, $\sigma_y = 10$ ksi, and $\tau_{xy} = -5$ ksi. Thus,

$$\sigma_{avg} = \frac{\sigma_x + \sigma_y}{2} = \frac{0 + 10}{2} = 5 \text{ ksi}$$

The coordinates of reference point A and the center C of the circle are

$$A(0, -5) \qquad\qquad C(5, 0)$$

Thus, the radius of the circle is

$$R = CA = \sqrt{(0 - 5)^2 + (-5)^2} = 7.071 \text{ ksi}$$

Using these results, the circle is shown in Fig. *a*.

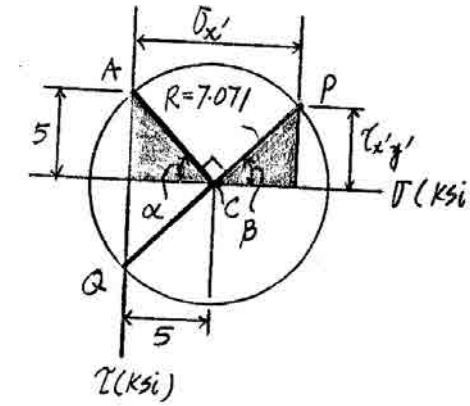

(a)

Normal and Shear Stresses on the Rotated Element: Here, $\theta = 45°$ clockwise. By rotating the radial line CA clockwise $2\theta = 90°$, it coincides with the radial line OP and the coordinates of reference point $P(\sigma_{x'}, \tau_{x'y'})$ represent the normal and shear stresses on the face of the element defined by $\theta = -45°$. $\sigma_{y'}$ can be determined by calculating the coordinates of point Q. From the geometry of the circle,

$$\alpha = \tan^{-1}\left(\frac{5}{5}\right) = 45° \qquad \beta = 180° - 90° - 45° = 45°$$

Then

$$\sigma_{x'} = 5 + 7.071 \cos 45° = 10 \text{ ksi} \qquad \textbf{Ans.}$$

$$\tau_{x'y'} = -7.071 \sin 45° = -5 \text{ ksi} \qquad \textbf{Ans.}$$

$$\sigma_{y'} = 5 - 7.071 \cos 45° = 0 \qquad \textbf{Ans.}$$

The results are indicated on the element shown in Fig. *b*.

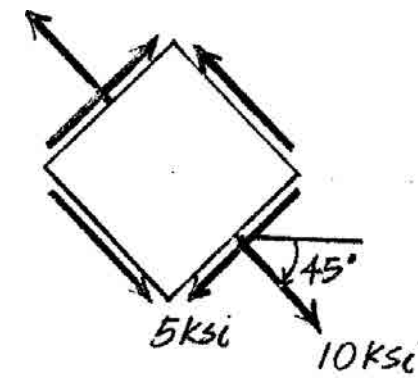

(b)

Ans:
$\sigma_{x'} = 10$ ksi, $\tau_{x'y'} = -5$ ksi, $\sigma_{y'} = 0$

***9–52.** Determine the equivalent state of stress if an element is oriented 20° clockwise from the element shown.

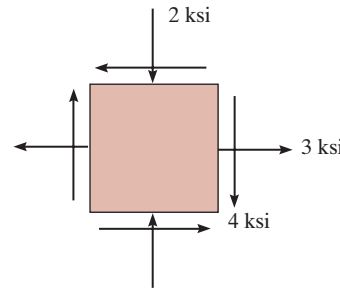

Construction of the Circle: In accordance with the sign convention, $\sigma_x = 3$ ksi, $\sigma_y = -2$ ksi, and $\tau_{x'y'} = -4$ ksi. Hence,

$$\sigma_{\text{avg}} = \frac{\sigma_x + \sigma_y}{2} = \frac{3 + (-2)}{2} = 0.500 \text{ ksi}$$

The coordinates for reference points A and C are

$$A(3, -4) \qquad C(0.500, 0)$$

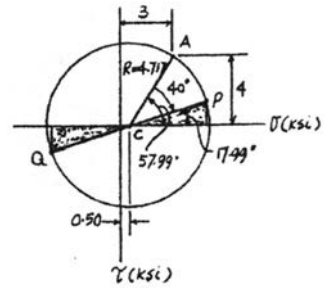

The radius of the circle is

$$R = \sqrt{(3 - 0.500)^2 + 4^2} = 4.717 \text{ ksi}$$

Stress on the Rotated Element: The normal and shear stress components $\left(\sigma_{x'} \text{ and } \tau_{x'y'}\right)$ are represented by the coordinate of point P on the circle. $\sigma_{y'}$ can be determined by calculating the coordinates of point Q on the circle.

$$\sigma_{x'} = 0.500 + 4.717 \cos 17.99° = 4.99 \text{ ksi} \qquad \textbf{Ans.}$$

$$\tau_{x'y'} = -4.717 \sin 17.99° = -1.46 \text{ ksi} \qquad \textbf{Ans.}$$

$$\sigma_{y'} = 0.500 - 4.717 \cos 17.99° = -3.99 \text{ ksi} \qquad \textbf{Ans.}$$

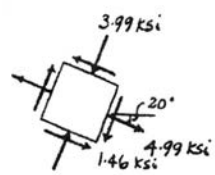

9–53. Determine the equivalent state of stress if an element is oriented 30° clockwise from the element shown.

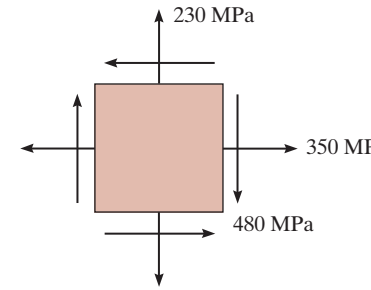

$A(350, -480)$ $B(230, 480)$ $C(290, 0)$

$R = \sqrt{60^2 + 480^2} = 483.73$

$\sigma_{x'} = 290 + 483.73 \cos 22.87° = 736 \text{ MPa}$ **Ans.**

$\sigma_{y'} = 290 - 483.73 \cos 22.87° = -156 \text{ MPa}$ **Ans.**

$\tau_{x'y'} = -483.73 \sin 22.87° = -188 \text{ MPa}$ **Ans.**

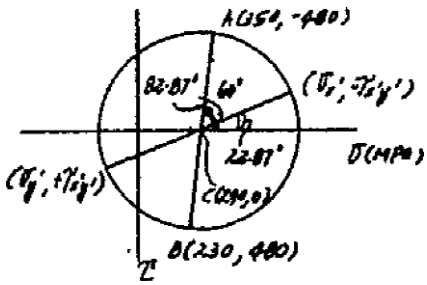

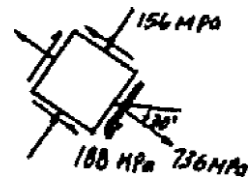

Ans:
$\sigma_{x'} = 736 \text{ MPa}$, $\sigma_{y'} = -156 \text{ MPa}$,
$\tau_{x'y'} = -188 \text{ MPa}$

9–54. Determine the equivalent state of stress which represents (a) the principal stress, and (b) the maximum in-plane shear stress and the associated average normal stress. For each case, determine the corresponding orientation of the element with respect to the element shown.

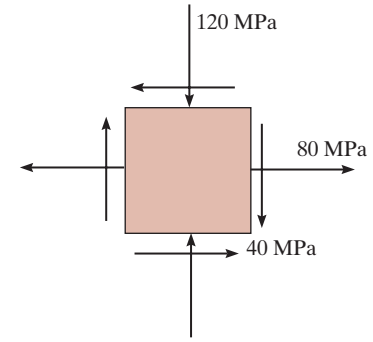

Construction of the Circle: $\sigma_x = 80$ MPa, $\sigma_y = -120$ MPa, and $\tau_{xy} = -40$ MPa. Thus,

$$\sigma_{avg} = \frac{\sigma_x + \sigma_y}{2} = \frac{80 + (-120)}{2} = -20 \text{ MPa} \qquad \textbf{Ans.}$$

The coordinates of reference point A and the center C of the circle are

$$A(80, -40) \qquad\qquad C(-20, 0)$$

Thus, the radius of the circle is

$$R = CA = \sqrt{[80 - (-20)]^2 + (-40)^2} = 107.703 \text{ MPa}$$

Using these results, the circle is shown in Fig. *a*.

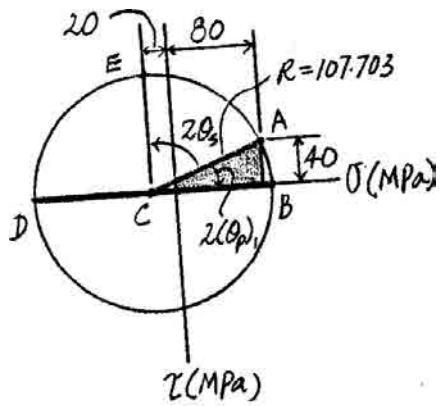

(a)

In-Plane Principal Stress: The coordinates of reference points B and D represent σ_1 and σ_2, respectively.

$$\sigma_1 = -20 + 107.703 = 87.7 \text{ MPa} \qquad \textbf{Ans.}$$

$$\sigma_2 = -20 - 107.703 = -128 \text{ MPa} \qquad \textbf{Ans.}$$

Orientation of the Principal Plane: Referring to the geometry of the circle,

$$\tan 2(\theta_p)_1 = \frac{40}{80 + 20} = 0.4$$

$$(\theta_p)_1 = 10.9° \text{ (clockwise)} \qquad \textbf{Ans.}$$

The state of principal stress is represented on the element shown in Fig. *b*.

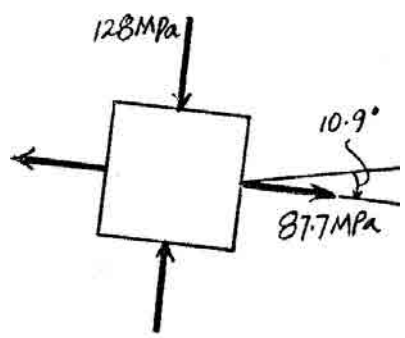

(b)

Maximum In-Plane Shear Stress: The state of maximum in-plane shear stress is represented by the coordinates of point E. Fig. *a*.

$$\tau_{\substack{max \\ in\text{-}plane}} = -R = -108 \text{ MPa} \qquad \textbf{Ans.}$$

Orientation of the Plane of Maximum In-Plane Shear Stress: From the geometry of the circle, Fig. *a*,

$$\tan 2\theta_s = \frac{80 + 20}{40} = 2.5 \qquad \textbf{Ans.}$$

$$\theta_s = 34.1° \text{ (counterclockwise)} \qquad \textbf{Ans.}$$

The state of in-plane maximum shear stress is represented on the element shown in Fig. *c*.

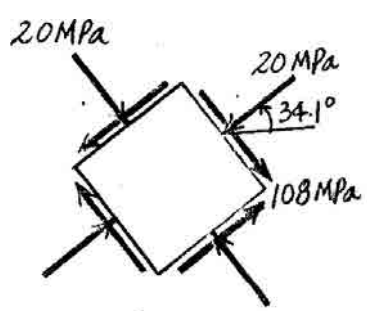

(c)

Ans:
$\sigma_1 = 87.7$ MPa, $\sigma_2 = -128$ MPa,
$(\theta_p)_1 = 10.9°$ (clockwise), $\sigma_{avg} = -20$ MPa,
$\tau_{\substack{max \\ in\text{-}plane}} = -108$ MPa,
$\theta_s = 34.1°$ (counterclockwise)

9–55. Determine the equivalent state of stress which represents (a) the principal stress, and (b) the maximum in-plane shear stress and the associated average normal stress. For each case, determine the corresponding orientation of the element with respect to the element shown.

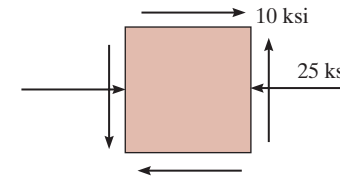

Construction of the Circle: $\sigma_x = -25$ ksi, $\sigma_y = 0$, and $\tau_{xy} = 10$ ksi. Thus,

$$\sigma_{avg} = \frac{\sigma_x + \sigma_y}{2} = \frac{-25 + 0}{2} = -12.5 \text{ ksi} \qquad \textbf{Ans.}$$

The coordinates of reference point A and the center C of the circle are

$$A(-25, 10) \qquad C(-12.5, 0)$$

Thus, the radius of the circle is

$$R = CA = \sqrt{[-25 - (-12.5)]^2 + 10^2} = 16.008 \text{ ksi}$$

Using these results, the circle is shown in Fig. *a*.

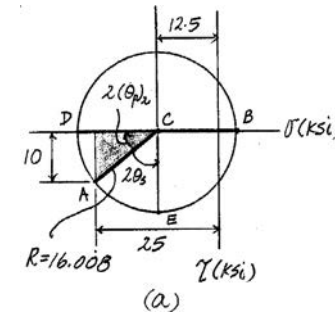

(a)

In-Plane Principal Stress: The coordinates of reference points B and D represent σ_1 and σ_2, respectively.

$$\sigma_1 = -12.5 + 16.008 = 3.51 \text{ ksi} \qquad \textbf{Ans.}$$

$$\sigma_2 = -12.5 - 16.008 = -28.5 \text{ ksi} \qquad \textbf{Ans.}$$

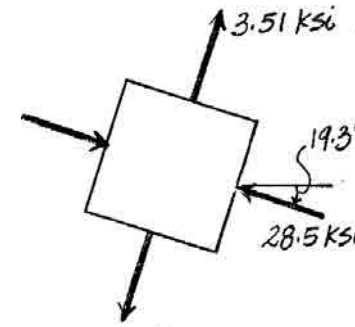

(b)

Orientation of the Principal Plane: From the geometry of the circle, Fig. *a*,

$$\tan 2(\theta_p)_1 = \frac{10}{25 - 12.5} = 0.8$$

$$(\theta_p)_1 = 19.3° \text{ (clockwise)} \qquad \textbf{Ans.}$$

The state of principal stress is represented on the element shown in Fig. *b*.

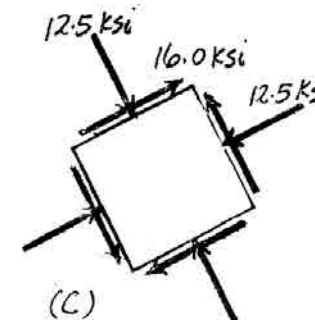

(c)

Maximum In-Plane Shear Stress: The state of maximum in-plane shear stress is represented by the coordinates of point E, Fig. *a*.

$$\tau_{\substack{max \\ in\text{-}plane}} = R = 16.0 \text{ ksi} \qquad \textbf{Ans.}$$

Orientation of the Plane of Maximum In-Plane Shear Stress: From the geometry of the circle,

$$\tan 2\theta_s = \frac{25 - 12.5}{10} = 1.25$$

$$\theta_s = 25.7° \text{ (counterclockwise)} \qquad \textbf{Ans.}$$

The state of in-plane maximum shear stress is represented on the element shown in Fig. *c*.

Ans:
$\sigma_1 = 3.51$ ksi, $\sigma_2 = -28.5$ ksi,
$(\theta_p)_1 = 19.3°$(clockwise), $\tau_{\substack{max \\ in\text{-}plane}} = 16.0$ ksi,
$\sigma_{avg} = -12.5$ ksi, $\theta_s = 25.7°$ (counterclockwise)

***9–56.** Determine the principal stress, the maximum in-plane shear stress, and average normal stress. Specify the orientation of the element in each case.

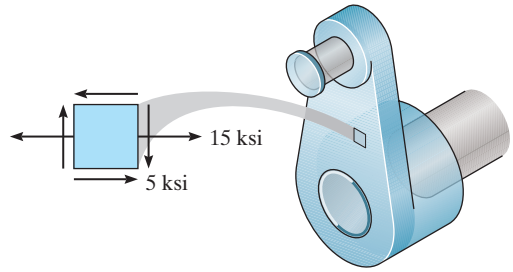

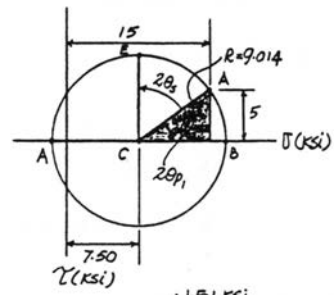

Construction of the Circle: In accordance with the sign convention, $\sigma_x = 15$ ksi, $\sigma_y = 0$ and $\tau_{xy} = -5$ ksi. Hence,

$$\sigma_{avg} = \frac{\sigma_x + \sigma_y}{2} = \frac{15 + 0}{2} = 7.50 \text{ ksi} \qquad \textbf{Ans.}$$

The coordinates for reference point A and C are

$$A(15, -5) \qquad C(7.50, 0)$$

The radius of the circle is

$$R = \sqrt{(15 - 7.50)^2 + 5^2} = 9.014 \text{ ksi}$$

a)

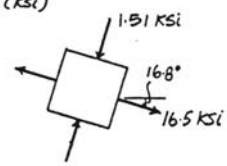

In-Plane Principal Stress: The coordinates of points B and D represent σ_1 and σ_2, respectively.

$$\sigma_1 = 7.50 + 9.014 = 16.5 \text{ ksi} \qquad \textbf{Ans.}$$

$$\sigma_2 = 7.50 - 9.014 = -1.51 \text{ ksi} \qquad \textbf{Ans.}$$

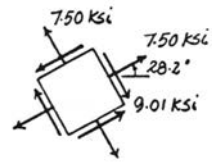

Orientation of Principal Plane: From the circle

$$\tan 2\theta_{P1} = \frac{5}{15 - 7.50} = 0.6667$$

$$\theta_{P1} = 16.8° \ (Clockwise) \qquad \textbf{Ans.}$$

b)

Maximum In-Plane Shear Stress: Represented by the coordinates of point E on the circle.

$$\tau_{\substack{max \\ in\text{-}plane}} = -R = -9.01 \text{ ksi} \qquad \textbf{Ans.}$$

Orientation of the Plane for Maximum In-Plane Shear Stress: From the circle

$$\tan 2\theta_s = \frac{15 - 7.50}{5} = 1.500$$

$$\theta_s = 28.2° \quad (Counterclockwise) \qquad \textbf{Ans.}$$

9–57. Determine (a) the principal stresses and (b) the maximum in-plane shear stress and average normal stress. Specify the orientation of the element in each case.

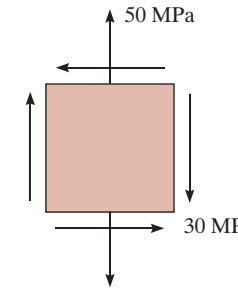

$A(0, -30)$ $B(50, 30)$ $C(25, 0)$

$R = CA = \sqrt{(25 - 0)^2 + 30^2} = 39.05$

$\sigma_1 = 25 + 39.05 = 64.1$ MPa **Ans.**

$\sigma_2 = 25 - 39.05 = -14.1$ MPa **Ans.**

$\tan 2\theta_p = \dfrac{30}{25 - 0} = 1.2$

$\theta_{p2} = 25.1°$ **Ans.**

$\sigma_{avg} = 25.0$ MPa **Ans.**

$\tau_{\substack{max \\ in\text{-}plane}} = R = 39.1$ MPa **Ans.**

$\tan 2\theta_s = \dfrac{25 - 0}{30} = 0.8333$

$\theta_s = -19.9°$ **Ans.**

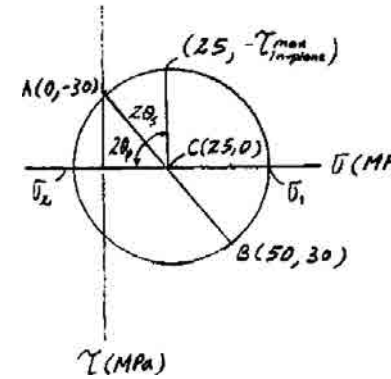

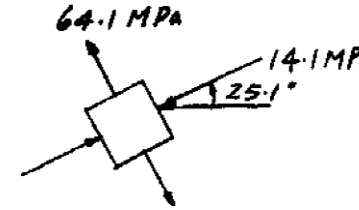

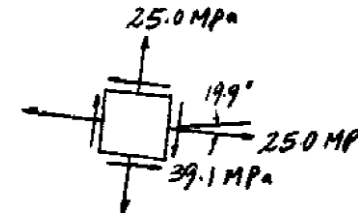

Ans:
$\sigma_1 = 64.1$ MPa, $\sigma_2 = -14.1$ MPa, $\theta_{p2} = 25.1°$
$\sigma_{avg} = 25.0$ MPa, $\tau_{\substack{max \\ in\text{-}plane}} = 39.1$ MPa,
$\theta_s = -19.9°$

9–58. Determine the equivalent state of stress if an element is oriented 25° counterclockwise from the element shown.

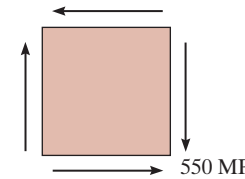

$A(0, -550)$ $B(0, 550)$ $C(0, 0)$

$R = CA = CB = 550$

$\sigma_{x'} = -550 \sin 50° = -421$ MPa **Ans.**

$\tau_{x'y'} = -550 \cos 50° = -354$ MPa **Ans.**

$\sigma_{y'} = 550 \sin 50° = 421$ MPa **Ans.**

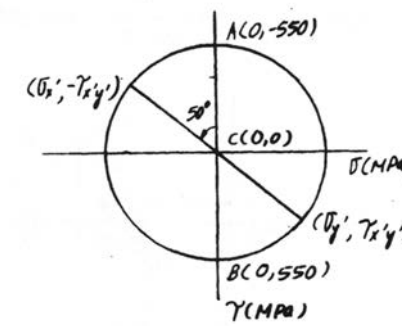

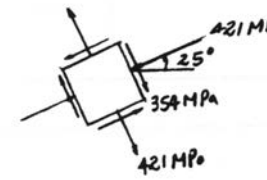

Ans:
$\sigma_{x'} = -421$ MPa, $\tau_{x'y'} = -354$ MPa,
$\sigma_{y'} = 421$ MPa

9–59. Determine (a) the principal stresses and (b) the maximum in-plane shear stress and average normal stress. Specify the orientation of the element in each case.

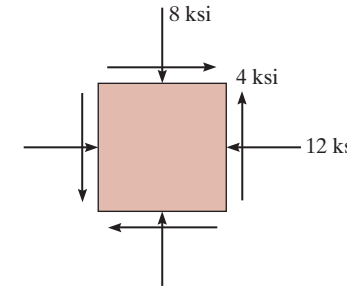

$A(-12, 4)$ $\quad B(-8, -4)$ $\quad C(-10, 0)$

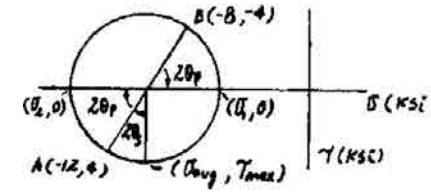

$R = CA = CB = \sqrt{2^2 + 4^2} = 4.472$

a)

$\sigma_1 = -10 + 4.472 = -5.53$ ksi **Ans.**

$\sigma_2 = -10 - 4.472 = -14.5$ ksi **Ans.**

$\tan 2\theta_p = \dfrac{4}{2} \qquad 2\theta_p = 63.43° \qquad \theta_p = -31.7°$

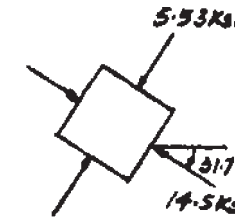

b)

$\tau_{\substack{\max \\ \text{in-plane}}} = R = 4.47$ ksi **Ans.**

$\sigma_{avg} = -10$ ksi **Ans.**

$2\theta_s = 90 - 2\theta_p$

$\theta_s = 13.3°$ **Ans.**

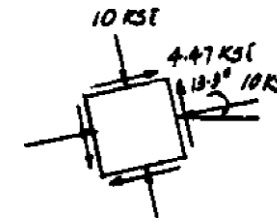

Ans:
(a) $\sigma_1 = -5.53$ ksi, $\sigma_2 = -14.5$ ksi, $\theta_p = -31.7°$
(b) $\tau_{\substack{\max \\ \text{in-plane}}} = 4.47$ ksi, $\sigma_{avg} = -10$ ksi, $\theta_s = 13.3°$

***9–60.** Determine the principal stresses, the maximum in-plane shear stress, and average normal stress. Specify the orientation of the element in each case.

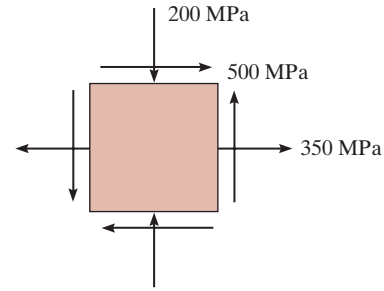

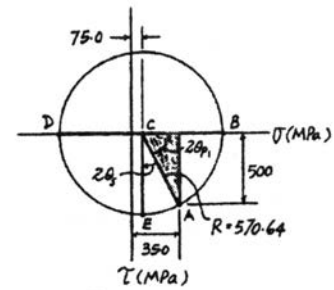

Construction of the Circle: In accordance with the sign convention, $\sigma_x = 350$ MPa, $\sigma_y = -200$ MPa, and $\tau_{xy} = 500$ MPa. Hence,

$$\sigma_{avg} = \frac{\sigma_x + \sigma_y}{2} = \frac{350 + (-200)}{2} = 75.0 \text{ MPa} \qquad \textbf{Ans.}$$

The coordinates for reference point A and C are

$$A(350, 500) \qquad C(75.0, 0)$$

The radius of the circle is

$$R = \sqrt{(350 - 75.0)^2 + 500^2} = 570.64 \text{ MPa}$$

a)

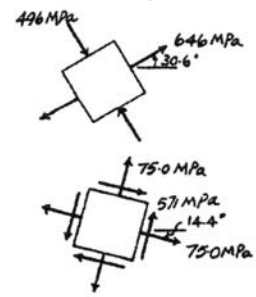

In-Plane Principal Stresses: The coordinate of points B and D represent σ_1 and σ_2 respectively.

$$\sigma_1 = 75.0 + 570.64 = 646 \text{ MPa} \qquad \textbf{Ans.}$$

$$\sigma_2 = 75.0 - 570.64 = -496 \text{ MPa} \qquad \textbf{Ans.}$$

Orientaion of Principal Plane: From the circle

$$\tan 2\theta_{P1} = \frac{500}{350 - 75.0} = 1.82$$

$$\theta_{P1} = 30.6° \ (\textit{Counterclockwise}) \qquad \textbf{Ans.}$$

b)

Maximum In-Plane Shear Stress: Represented by the coordinates of point E on the circle.

$$\tau_{\substack{\max \\ \text{in-plane}}} = R = 571 \text{ MPa} \qquad \textbf{Ans.}$$

Orientation of the Plane for Maximum In-Plane Shear Stress: From the circle

$$\tan 2\theta_s = \frac{350 - 75.0}{500} = 0.55$$

$$\theta_s = 14.4° \quad (\textit{Clockwise}) \qquad \textbf{Ans.}$$

9–61. Draw Mohr's circle that describes each of the following states of stress.

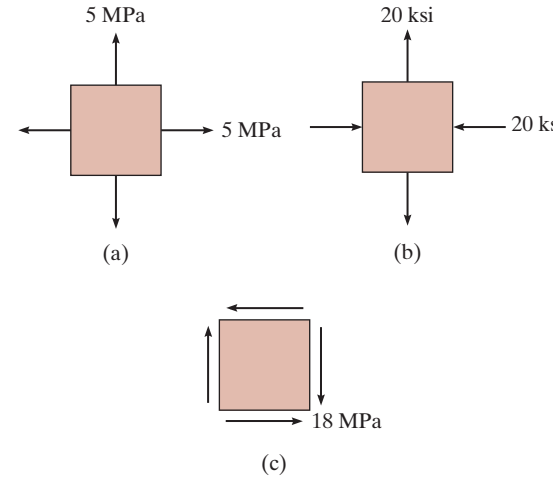

a)

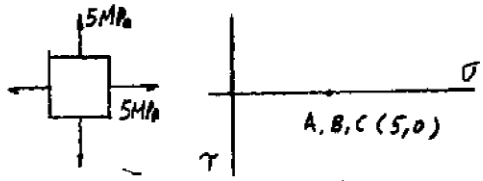

A(5,0) B(5,0) C(5,0)

b)

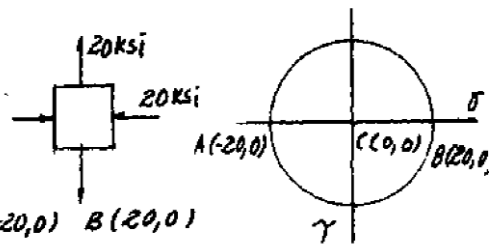

A(-20,0) B(20,0)

C(0,0)

c)

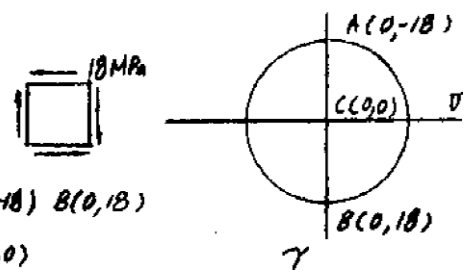

A(0,-18) B(0,18)

C(0,0)

9–62. The grains of wood in the board make an angle of 20° with the horizontal as shown. Using Mohr's circle, determine the normal and shear stresses that act perpendicular and parallel to the grains if the board is subjected to an axial load of 250 N.

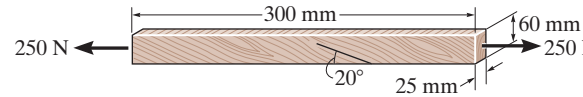

$$\sigma_x = \frac{P}{A} = \frac{250}{(0.06)(0.025)} = 166.67 \text{ kPa}$$

$R = 83.33$

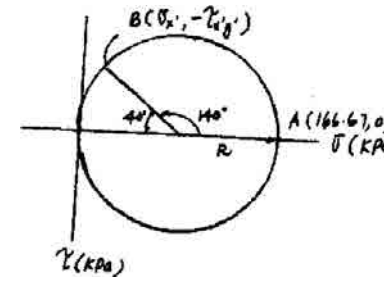

Coordinates of point *B*:

$\sigma_{x'} = 83.33 - 83.33 \cos 40°$

$\sigma_{x'} = 19.5 \text{ kPa}$ **Ans.**

$\tau_{x'y'} = -83.33 \sin 40° = -53.6 \text{ kPa}$ **Ans.**

Ans:
$\sigma_{x'} = 19.5 \text{ kPa}, \tau_{x'y'} = -53.6 \text{ kPa}$

9–63. The post has a square cross-sectional area. If it is fixed supported at its base and a horizontal force is applied at its end as shown, determine (a) the maximum in-plane shear stress developed at A and (b) the principal stresses at A.

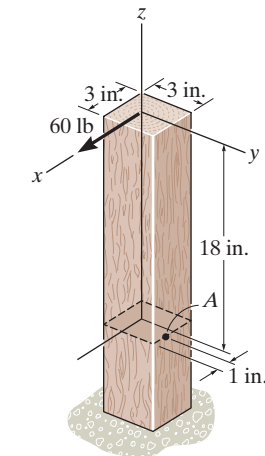

$$I = \frac{1}{12}(3)(3^3) = 6.75 \text{ in}^4 \qquad Q_A = (1)(1)(3) = 3 \text{ in}^3$$

$$\sigma_A = \frac{M_y x}{I} = \frac{1080(0.5)}{6.75} = -80 \text{ psi}$$

$$\tau_A = \frac{V_y Q_A}{It} = \frac{60(3)}{6.75(3)} = 8.889 \text{ psi}$$

$A(-80, 8.889) \qquad B(0, -8.889) \qquad C(-40, 0)$

$$\tau_{\substack{\max \\ \text{in-plane}}} = R = \sqrt{40^2 + 8.889^2} = 41.0 \text{ psi} \qquad \textbf{Ans.}$$

$$\sigma_1 = -40 + 40.9757 = 0.976 \text{ psi} \qquad \textbf{Ans.}$$

$$\sigma_2 = -40 - 40.9757 = -81.0 \text{ psi} \qquad \textbf{Ans.}$$

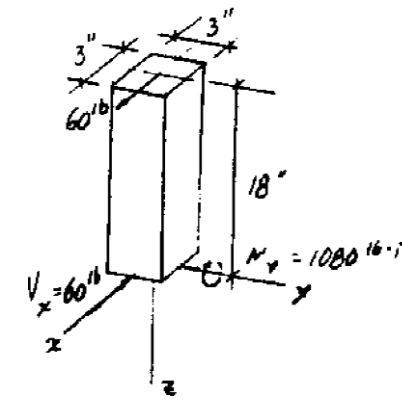

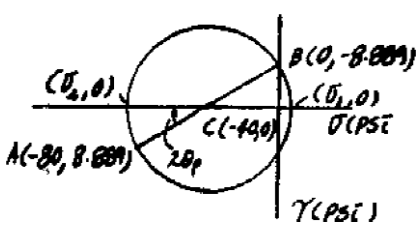

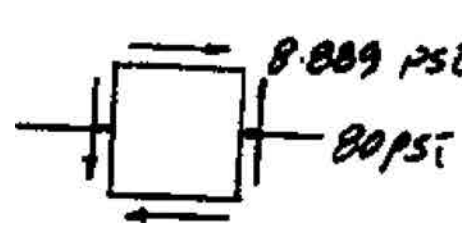

Ans:
$\tau_{\substack{\max \\ \text{in-plane}}} = 41.0$ psi, $\sigma_1 = 0.976$ psi, $\sigma_2 = -81.0$ psi

***9–64.** Determine the principal stress, the maximum in-plane shear stress, and average normal stress. Specify the orientation of the element in each case.

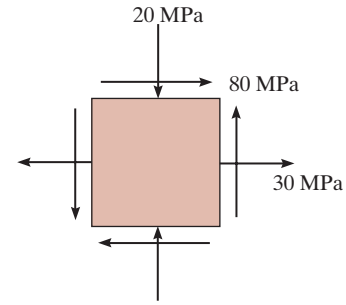

In accordance to the established sign convention, $\sigma_x = 30$ MPa, $\sigma_y = -20$ MPa and $\tau_{xy} = 80$ MPa. Thus,

$$\sigma_{avg} = \frac{\sigma_x + \sigma_y}{2} = \frac{30 + (-20)}{2} = 5 \text{ MPa}$$

Then, the coordinates of reference point A and the center C of the circle is

$$A(30, 80) \qquad C(5, 0)$$

Thus, the radius of circle is given by

$$R = CA = \sqrt{(30 - 5)^2 + (80 - 0)^2} = 83.815 \text{ MPa}$$

Using these results, the circle shown in Fig. *a*, can be constructed.

The coordinates of points B and D represent σ_1 and σ_2 respectively. Thus

$$\sigma_1 = 5 + 83.815 = 88.8 \text{ MPa} \qquad \textbf{Ans.}$$

$$\sigma_2 = 5 - 83.815 = -78.8 \text{ MPa} \qquad \textbf{Ans.}$$

Referring to the geometry of the circle, Fig. *a*

$$\tan 2(\theta_P)_1 = \frac{80}{30 - 5} = 3.20$$

$$\theta_P = 36.3° \ (Counterclockwise) \qquad \textbf{Ans.}$$

The state of maximum in-plane shear stress is represented by the coordinate of point E. Thus

$$\tau_{\substack{max \\ in\text{-}plane}} = R = 83.8 \text{ MPa} \qquad \textbf{Ans.}$$

From the geometry of the circle, Fig. *a*,

$$\tan 2\theta_s = \frac{30 - 5}{80} = 0.3125$$

$$\theta_s = 8.68° \quad (Clockwise) \qquad \textbf{Ans.}$$

The state of maximum in-plane shear stress is represented by the element in Fig. *c*.

9–64. Continued

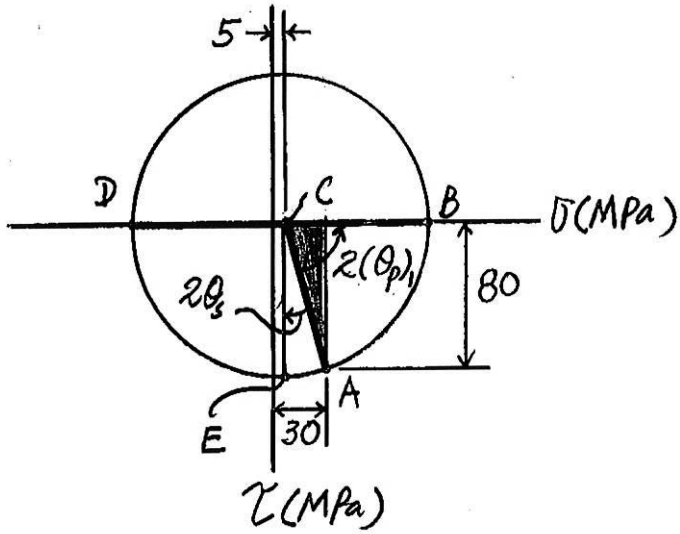

(a)

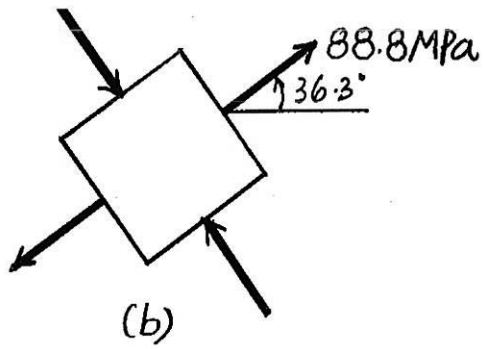

(b)

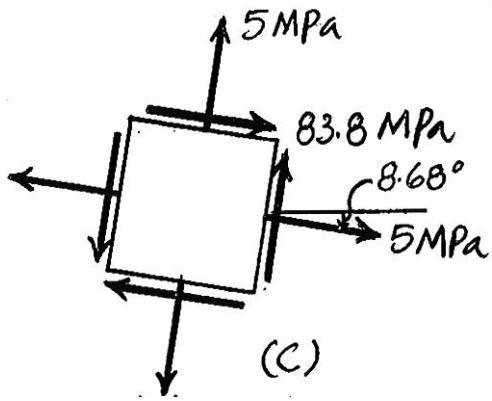

(c)

9–65. The thin-walled pipe has an inner diameter of 0.5 in. and a thickness of 0.025 in. If it is subjected to an internal pressure of 500 psi and the axial tension and torsional loadings shown, determine the principal stress at a point on the surface of the pipe.

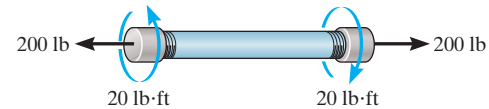

Section Properties:

$$A = \pi\left(0.275^2 - 0.25^2\right) = 0.013125\pi \text{ in}^2$$

$$J = \frac{\pi}{2}\left(0.275^4 - 0.25^4\right) = 2.84768\left(10^{-3}\right) \text{ in}^4$$

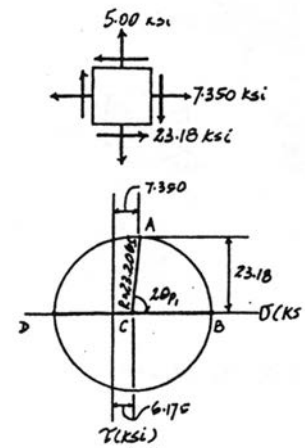

Normal Stress: Since $\frac{r}{t} = \frac{0.25}{0.025} = 10$, thin wall analysis is valid.

$$\sigma_{\text{long}} = \frac{N}{A} + \frac{pr}{2t} = \frac{200}{0.013125\pi} + \frac{500(0.25)}{2(0.025)} = 7.350 \text{ ksi}$$

$$\sigma_{\text{hoop}} = \frac{pr}{t} = \frac{500(0.25)}{0.025} = 5.00 \text{ ksi}$$

Shear Stress: Applying the torsion formula,

$$\tau = \frac{Tc}{J} = \frac{20(12)(0.275)}{2.84768(10^{-3})} = 23.18 \text{ ksi}$$

Construction of the Circle: In accordance with the sign convention $\sigma_x = 7.350$ ksi, $\sigma_y = 5.00$ ksi, and $\tau_{xy} = -23.18$ ksi. Hence,

$$\sigma_{\text{avg}} = \frac{\sigma_x + \sigma_y}{2} = \frac{7.350 + 5.00}{2} = 6.175 \text{ ksi}$$

The coordinates for reference points A and C are

$$A(7.350, -23.18) \qquad C(6.175, 0)$$

The radius of the circle is

$$R = \sqrt{(7.350 - 6.175)^2 + 23.18^2} = 23.2065 \text{ ksi}$$

In-Plane Principal Stress: The coordinates of point B and D represent σ_1 and σ_2, respectively.

$$\sigma_1 = 6.175 + 23.2065 = 29.4 \text{ ksi} \qquad \textbf{Ans.}$$

$$\sigma_2 = 6.175 - 23.2065 = -17.0 \text{ ksi} \qquad \textbf{Ans.}$$

Ans:
$\sigma_1 = 29.4$ ksi, $\sigma_2 = -17.0$ ksi

9–66. Determine the principal stress and maximum in-plane shear stress at point A on the cross section of the pipe at section a–a.

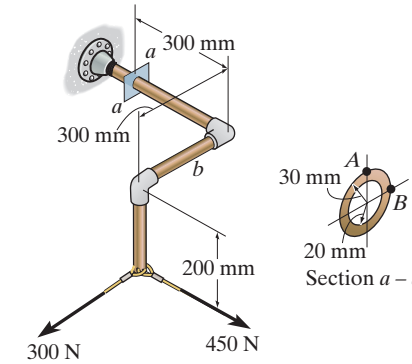

Internal Loadings: Considering the equilibrium of the free-body diagram of the assembly's segment, Fig. a,

$\Sigma F_x = 0;\quad N - 450 = 0 \qquad\qquad N = 450\text{ N}$

$\Sigma F_y = 0;\quad V_y = 0$

$\Sigma F_z = 0;\quad V_z + 300 = 0 \qquad\qquad V_z = -300\text{ N}$

$\Sigma M_x = 0;\quad T + 300(0.2) = 0 \qquad\qquad T = -60\text{ N}\cdot\text{m}$

$\Sigma M_y = 0;\quad M_y - 450(0.3) + 300(0.3) = 0 \qquad\qquad M_y = 45\text{ N}\cdot\text{m}$

$\Sigma M_z = 0;\quad M_z + 450(0.2) = 0 \qquad\qquad M_z = -90\text{ N}\cdot\text{m}$

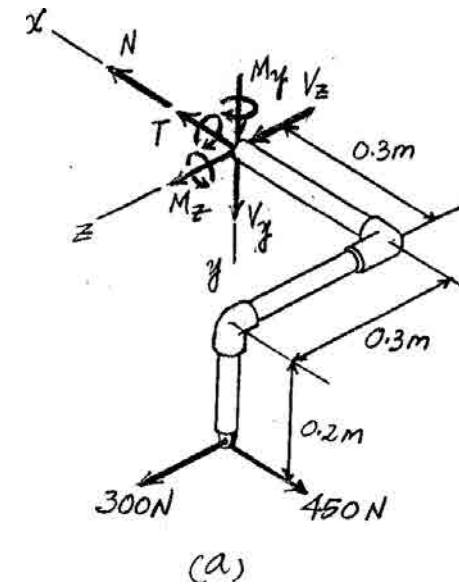

Section Properties: The cross-sectional area, the moment of inertia about the y and z axes, and the polar moment of inertia of the pipe's cross section are

$$A = \pi(0.03^2 - 0.02^2) = 0.5\pi(10^{-3})\text{ m}^2$$

$$I_y = I_z = \frac{\pi}{4}(0.03^4 - 0.02^4) = 0.1625\pi(10^{-6})\text{ m}^4$$

$$J = \frac{\pi}{2}(0.03^4 - 0.02^4) = 0.325\pi(10^{-6})\text{ m}^4$$

Referring to Fig. b,

$$(Q_y)_A = 0 \quad (Q_z)_A = \frac{4(0.03)}{3\pi}\left[\frac{\pi}{2}(0.03)^2\right] - \frac{4(0.02)}{3\pi}\left[\frac{\pi}{2}(0.02^2)\right] = 12.667(10^{-6})\text{ m}^3$$

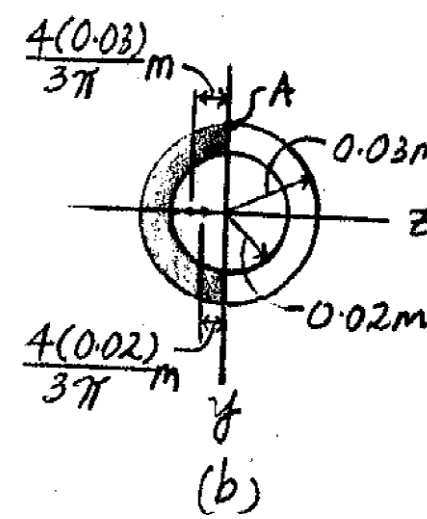

Normal and Shear Stress: The normal stress is a combination of axial and bending stress.

$$\sigma_A = \frac{N}{A} - \frac{M_z y_A}{I_z} = \frac{450}{0.5\pi(10^{-3})} - \frac{(-90)(-0.03)}{0.1625\pi(10^{-6})}$$

$$= -5.002\text{ MPa}$$

Since $V_y = 0$, $[(\tau_{xy})_V]_A = 0$. However, the shear stress is the combination of torsional and transverse shear stress. Thus,

$$(\tau_{xz})_A = [(\tau_{xz})_T]_A - [(\tau_{xz})_V]_A$$

$$= \frac{Tc}{J} - \frac{V_z(Q_z)_A}{I_y t} = \frac{60(0.03)}{0.325\pi(10^{-6})} - \frac{300[12.667(10^{-6})]}{0.1625\pi(10^{-6})(0.02)} = 1.391\text{ MPa}$$

The state of stress at point A is represented by the element shown in Fig. c.

9–66. Continued

Construction of the Circle: $\sigma_x = -5.002$ MPa, $\sigma_z = 0$, and $\tau_{xz} = 1.391$ MPa. Thus,

$$\sigma_{avg} = \frac{\sigma_x + \sigma_z}{2} = \frac{-5.002 + 0}{2} = -2.501 \text{ MPa}$$

The coordinates of reference point A and the center C of the circle are

$$A(-5.002, 1.391) \qquad C(-2.501, 0)$$

Thus, the radius of the circle is

$$R = CA = \sqrt{[-5.002 - (-2.501)]^2 + 1.391^2} = 2.862 \text{ MPa}$$

Using these results, the circle is shown in Fig. d.

In-Plane Principal Stresses: The coordinates of reference points B and D represent σ_1 and σ_2, respectively.

$$\sigma_1 = -2.501 + 2.862 = 0.361 \text{ MPa} \qquad \textbf{Ans.}$$

$$\sigma_2 = -2.501 - 2.862 = -5.36 \text{ MPa} \qquad \textbf{Ans.}$$

In-Plane Maximum Shear Stress: The coordinates of point E represent the state of maximum shear stress. Thus,

$$\tau_{\substack{max \\ in\text{-}plane}} = |R| = 2.86 \text{ MPa} \qquad \textbf{Ans.}$$

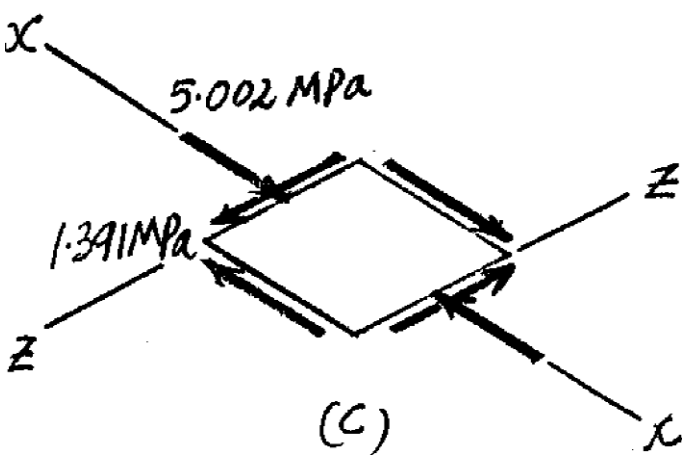

(c)

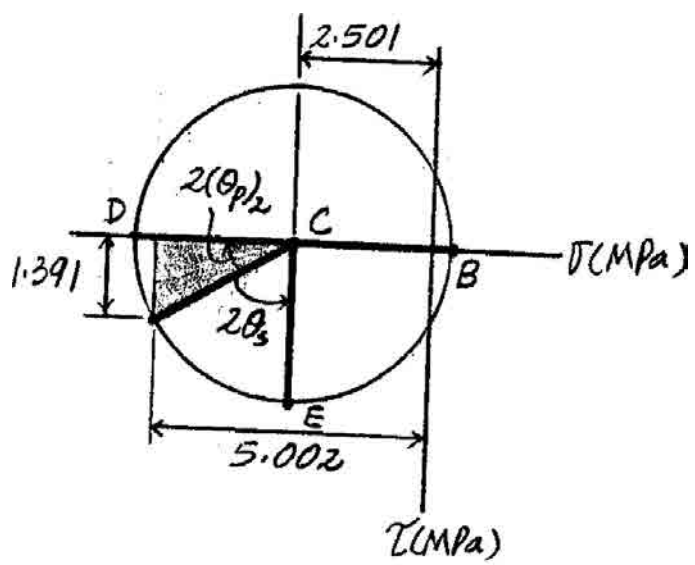

(d)

Ans:
$\sigma_1 = 0.361$ MPa, $\sigma_2 = -5.36$ MPa,
$\tau_{\substack{max \\ in\text{-}plane}} = 2.86$ MPa

9–67. Determine the principal stress and maximum in-plane shear stress at point B on the cross section of the pipe at section a–a.

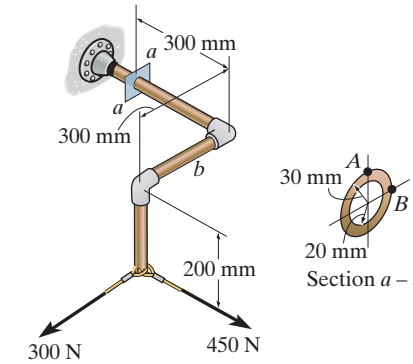

Internal Loadings: Considering the equilibrium of the free-body diagram of the assembly's cut segment, Fig. a,

$\Sigma F_x = 0;$ $\quad N - 450 = 0$ $\quad N = 450\text{ N}$

$\Sigma F_y = 0;$ $\quad V_y = 0$

$\Sigma F_z = 0;$ $\quad V_z + 300 = 0$ $\quad V_z = -300\text{ N}$

$\Sigma M_x = 0;$ $\quad T + 300(0.2) = 0$ $\quad T = -60\text{ N}\cdot\text{m}$

$\Sigma M_y = 0;$ $\quad M_y - 450(0.3) + 300(0.3) = 0$ $\quad M_y = 45\text{ N}\cdot\text{m}$

$\Sigma M_z = 0;$ $\quad M_z + 450(0.2) = 0$ $\quad M_z = -90\text{ N}\cdot\text{m}$

Section Properties: The cross-sectional area, the moment of inertia about the y and z axes, and the polar moment of inertia of the pipe's cross section are

$$A = \pi\,(0.03^2 - 0.02^2) = 0.5\pi\,(10^{-3})\text{ m}^2$$

$$I_y = I_z = \frac{\pi}{4}(0.03^4 - 0.02^4) = 0.1625\pi(10^{-6})\text{ m}^4$$

$$J = \frac{\pi}{2}(0.03^4 - 0.02^4) = 0.325\pi(10^{-6})\text{ m}^4$$

Referring to Fig. b,

$$(Q_z)_B = 0$$

Normal and Shear Stress: The normal stress is a combination of axial and bending stress.

$$\sigma_B = \frac{N}{A} + \frac{M_y z_B}{I_y} = \frac{450}{0.5\pi(10^{-3})} + \frac{45(-0.03)}{0.1625\pi(10^{-6})}$$

$$= -2.358\text{ MPa}$$

Since $(Q_z)_B = 0$, $(\tau_{xy})_B = 0$. Also $V_y = 0$. Then the shear stress along the y axis is contributed by torsional shear stress only.

$$(\tau_{xy})_B = [(\tau_{xy})_T]_B = \frac{Tc}{J} = \frac{60(0.03)}{0.325\pi(10^{-6})} = 1.763\text{ MPa}$$

The state of stress at point B is represented on the two-dimensional element shown in Fig. c.

9–67. Continued

Construction of the Circle: $\sigma_x = -2.358$ MPa, $\sigma_y = 0$, and $\tau_{xy} = -1.763$ MPa. Thus,

$$\sigma_{avg} = \frac{\sigma_x + \sigma_y}{2} = \frac{-2.358 + 0}{2} = -1.179 \text{ MPa}$$

The coordinates of reference point A and the center C of the circle are

$$A(-2.358, -1.763) \qquad C(-1.179, 0)$$

Thus, the radius of the circle is

$$R = CA = \sqrt{[-2.358 - (-1.179)]^2 + (-1.763)^2} = 2.121 \text{ MPa}$$

Using these results, the circle is shown in Fig. d.

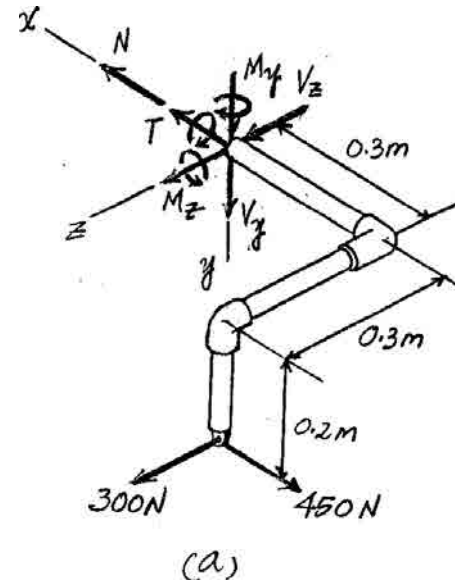

In-Plane Principal Stresses: The coordinates of reference points B and D represent σ_1 and σ_2, respectively.

$$\sigma_1 = -1.179 + 2.121 = 0.942 \text{ MPa} \qquad \textbf{Ans.}$$

$$\sigma_2 = -1.179 - 2.121 = -3.30 \text{ MPa} \qquad \textbf{Ans.}$$

Maximum In-Plane Shear Stress: The coordinates of point E represent the state of maximum in-plane shear stress. Thus,

$$\tau_{\substack{max \\ in\text{-}plane}} = |R| = 2.12 \text{ MPa} \qquad \textbf{Ans.}$$

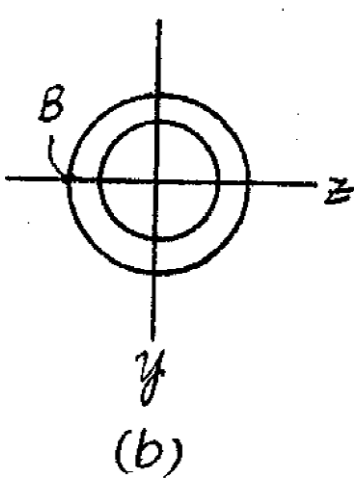

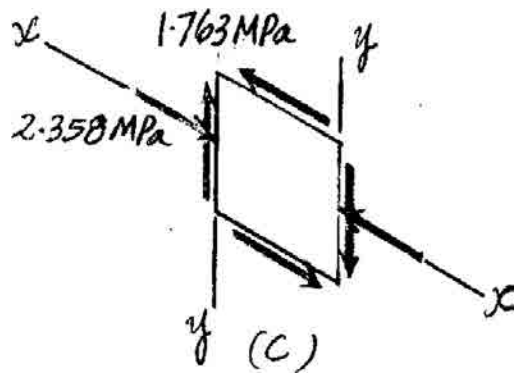

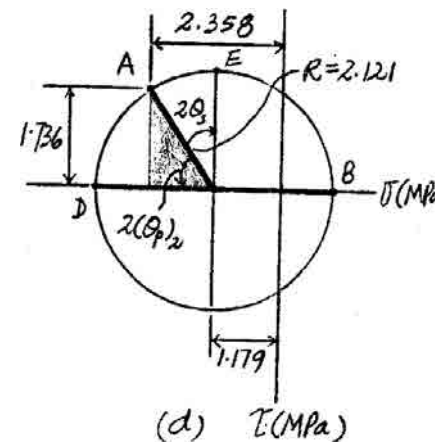

Ans:
$\sigma_1 = 0.942$ MPa, $\sigma_2 = -3.30$ MPa,
$\tau_{\substack{max \\ in\text{-}plane}} = 2.12$ MPa

***9–68.** The rotor shaft of the helicopter is subjected to the tensile force and torque shown when the rotor blades provide the lifting force to suspend the helicopter at midair. If the shaft has a diameter of 6 in., determine the principal stress and maximum in-plane shear stress at a point located on the surface of the shaft.

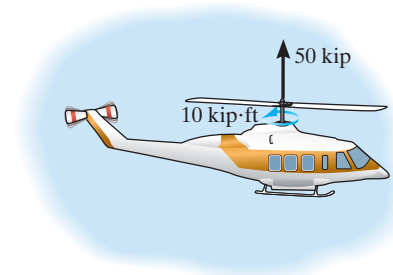

Internal Loadings: Considering the equilibrium of the free-body diagram of the rotor shaft's upper segment, Fig. *a*,

$\Sigma F_y = 0; \qquad N - 50 = 0 \qquad N = 50 \text{ kip}$

$\Sigma M_y = 0; \qquad T - 10 = 0 \qquad T = 10 \text{ kip} \cdot \text{ft}$

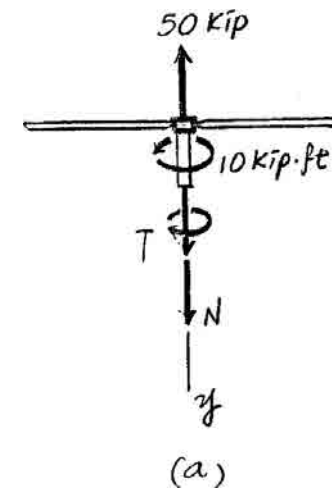

Section Properties: The cross-sectional area and the polar moment of inertia of the rotor shaft's cross section are

$$A = \pi(3^2) = 9\pi \text{ m}^2$$

$$J = \frac{\pi}{2}(3^4) = 40.5\pi \text{ in}^4$$

Normal and Shear Stress: The normal stress is contributed by axial stress only.

$$\sigma_A = \frac{N}{A} = \frac{50}{9\pi} = 1.768 \text{ ksi}$$

The shear stress is contributed by the torsional shear stress only.

$$\tau_A = \frac{Tc}{J} = \frac{10(12)(3)}{40.5\pi} = 2.829 \text{ ksi}$$

The state of stress at point A is represented by the element shown in Fig. *b*.

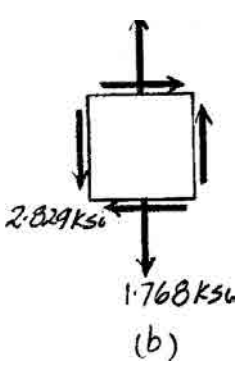

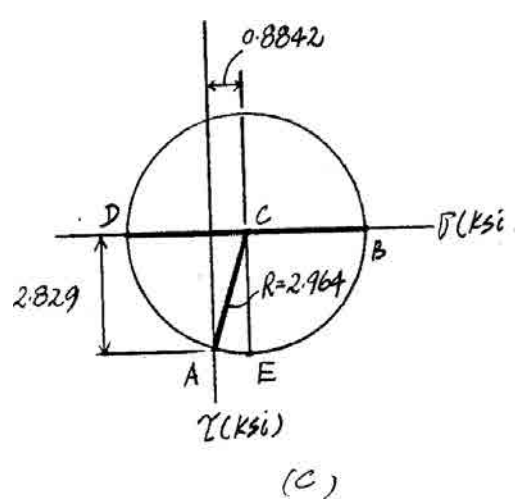

9–68. Continued

Construction of the Circle: $\sigma_x = 0$, $\sigma_y = 1.768$ ksi, and $\tau_{xy} = 2.829$ ksi. Thus,

$$\sigma_{avg} = \frac{\sigma_x + \sigma_y}{2} = \frac{0 + 1.768}{2} = 0.8842 \text{ ksi}$$

The coordinates of reference point A and the center C of the circle are

$$A(0, 2.829) \qquad C(0.8842, 0)$$

Thus, the radius of the circle is

$$R = CA = \sqrt{(0 - 0.8842)^2 + 2.829^2} = 2.964 \text{ ksi}$$

Using these results, the circle is shown in Fig. *c*.

In-Plane Principal Stress: The coordinates of reference points B and D represent σ_1 and σ_2, respectively.

$$\sigma_1 = 0.8842 + 2.964 = 3.85 \text{ ksi} \qquad \textbf{Ans.}$$

$$\sigma_2 = 0.8842 - 2.964 = -2.08 \text{ ksi} \qquad \textbf{Ans.}$$

Maximum In-Plane Shear Stress: The state of maximum shear stress is represented by the coordinates of point E, Fig. *a*.

$$\tau_{\substack{max \\ in\text{-}plane}} = R = 2.96 \text{ ksi} \qquad \textbf{Ans.}$$

***9–69.** The pedal crank for a bicycle has the cross section shown. If it is fixed to the gear at B and does not rotate while subjected to a force of 75 lb, determine the principal stress in the material on the cross section at point C.

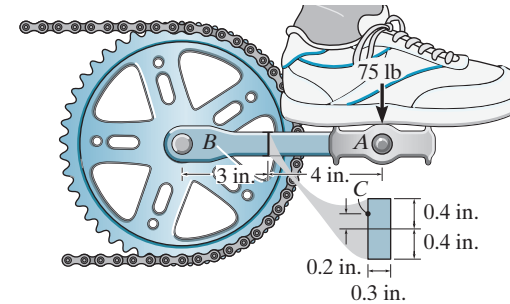

Internal Forces and Moment: As shown on FBD

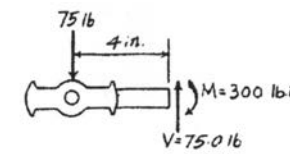

Section Properties:

$$I = \frac{1}{12}(0.3)\left(0.8^3\right) = 0.0128 \text{ in}^3$$

$$Q_C = \bar{y}'A' = 0.3(0.2)(0.3) = 0.0180 \text{ in}^3$$

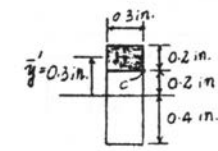

Normal Stress: Applying the flexure formula.

$$\sigma_C = -\frac{My}{I} = -\frac{-300(0.2)}{0.0128} = 4687.5 \text{ psi} = 4.6875 \text{ ksi}$$

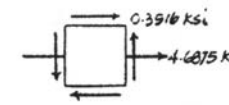

Shear Stress: Applying the shear formula.

$$\tau_C = \frac{VQ_C}{It} = \frac{75.0(0.0180)}{0.0128(0.3)} = 351.6 \text{ psi} = 0.3516 \text{ ksi}$$

Construction of the Circle: In accordance with the sign convention, $\sigma_x = 4.6875$ ksi, $\sigma_y = 0$, and $\tau_{xy} = 0.3516$ ksi. Hence,

$$\sigma_{\text{avg}} = \frac{\sigma_x + \sigma_y}{2} = \frac{4.6875 + 0}{2} = 2.34375 \text{ ksi}$$

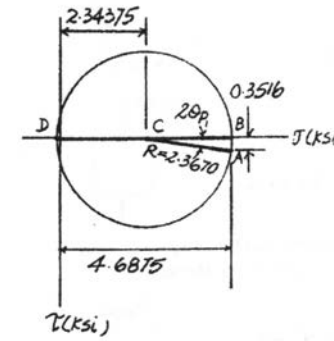

The coordinates for reference points A and C are

$$A(4.6875, 0.3516) \qquad C(2.34375, 0)$$

The radius of the circle is

$$R = \sqrt{(4.6875 - 2.34375)^2 + 0.3516^2} = 2.370 \text{ ksi}$$

In-Plane Principal Stress: The coordinates of point B and D represent σ_1 and σ_2, respectively.

$$\sigma_1 = 2.34375 + 2.370 = 4.71 \text{ ksi} \qquad \textbf{Ans.}$$

$$\sigma_2 = 2.34375 - 2.370 = -0.0262 \text{ ksi} \qquad \textbf{Ans.}$$

Ans:
$\sigma_1 = 4.71$ ksi, $\sigma_2 = -0.0262$ ksi

9–70. A spherical pressure vessel has an inner radius of 5 ft and a wall thickness of 0.5 in. Draw Mohr's circle for the state of stress at a point on the vessel and explain the significance of the result. The vessel is subjected to an internal pressure of 80 psi.

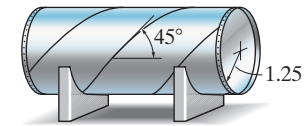

Normal Stress:

$$\sigma_1 = \sigma_2 = \frac{p\,r}{2\,t} = \frac{80(5)(12)}{2(0.5)} = 4.80 \text{ ksi}$$

Mohr's circle:

$A(4.80, 0)$ $B(4.80, 0)$ $C(4.80, 0)$

Regardless of the orientation of the element, the shear stress is zero and the state of stress is represented by the same two normal stress components. **Ans.**

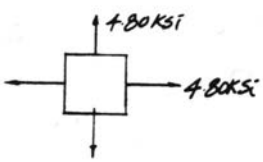

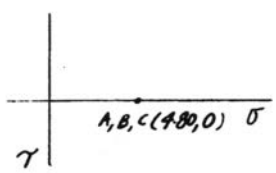

Ans:
Regardless of the orientation of the element, the shear stress is zero and the state of stress is represented by the same two normal stress components.

9–71. The cylindrical pressure vessel has an inner radius of 1.25 m and a wall thickness of 15 mm. It is made from steel plates that are welded along the 45° seam. Determine the normal and shear stress components along this seam if the vessel is subjected to an internal pressure of 8 MPa.

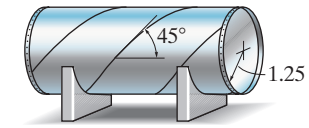

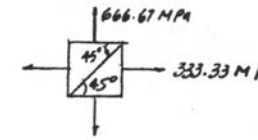

$$\sigma_x = \frac{pr}{2t} = \frac{8(1.25)}{2(0.015)} = 333.33 \text{ MPa}$$

$$\sigma_y = 2\sigma_x = 666.67 \text{ MPa}$$

$A(333.33, 0)$ $B(666.67, 0)$ $C(500, 0)$

$$\sigma_{x'} = \frac{333.33 + 666.67}{2} = 500 \text{ MPa}$$ **Ans.**

$$\tau_{x'y'} = -R = 500 - 666.67 = -167 \text{ MPa}$$ **Ans.**

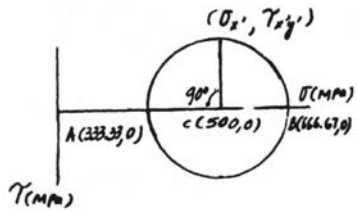

Ans:
$\sigma_{x'} = 500$ MPa, $\tau_{x'y'} = -167$ MPa

***9–72.** Determine the normal and shear stresses at point D that act perpendicular and parallel, respectively, to the grains. The grains at this point make an angle of 30° with the horizontal as shown. Point D is located just to the left of the 10-kN force.

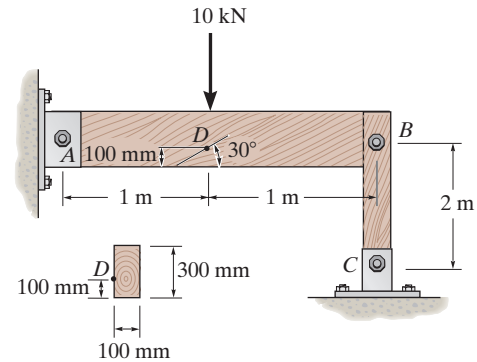

Using the method of section and consider the FBD of the left cut segment, Fig. a

$+\uparrow \Sigma F_y = 0; \qquad 5 - V = 0 \qquad V = 5\text{ kN}$

$\circlearrowleft + \Sigma M_C = 0; \qquad M - 5(1) = 0 \qquad M = 5\text{ kN}\cdot\text{m}$

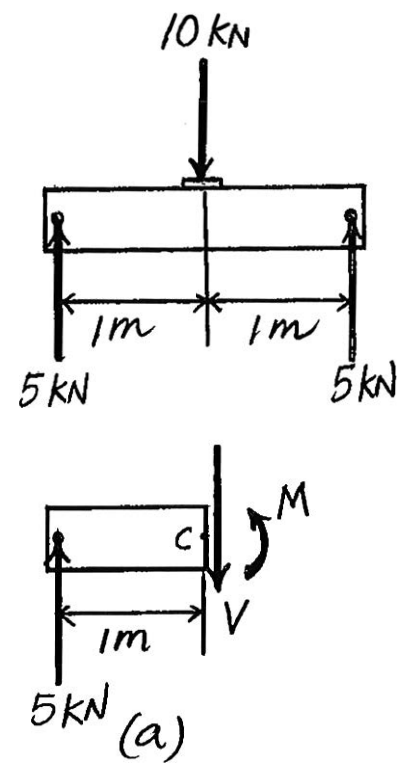

The moment of inertia of the rectangular cross - section about the neutral axis is

$$I = \frac{1}{12}(0.1)(0.3^3) = 0.225(10^{-3})\text{ m}^4$$

Referring to Fig. b,

$$Q_D = \bar{y}'A' = 0.1(0.1)(0.1) = 0.001\text{ m}^3$$

The normal stress developed is contributed by bending stress only. For point D, $y = 0.05$ m. Then

$$\sigma = \frac{My}{I} = \frac{5(10^3)(0.05)}{0.225(10^{-3})} = 1.111\text{ MPa (T)}$$

The shear stress is contributed by the transverse shear stress only. Thus,

$$\tau = \frac{VQ_D}{It} = \frac{5(10^3)(0.001)}{0.225(10^{-3})(0.1)} = 0.2222\text{ MPa}$$

The state of stress at point D can be represented by the element shown in Fig. c

In accordance with the established sign convention, $\sigma_x = 1.111$ MPa, $\sigma_y = 0$ and $\tau_{xy} = -0.2222$ MPa, Thus.

$$\sigma_{\text{avg}} = \frac{\sigma_x + \sigma_y}{2} = \frac{1.111 + 0}{2} = 0.5556\text{ MPa}$$

Then, the coordinate of reference point A and the center C of the circle are

$$A(1.111, -0.2222) \qquad C(0.5556, 0)$$

Thus, the radius of the circle is given by

$$R = \sqrt{(1.111 - 0.5556)^2 + (-0.2222)^2} = 0.5984\text{ MPa}$$

Using these results, the circle shown in Fig. d can be constructed.

Referring to the geometry of the circle, Fig. d,

$$\alpha = \tan^{-1}\left(\frac{0.2222}{1.111 - 0.5556}\right) = 21.80° \qquad \beta = 180° - (120° - 21.80°) = 81.80°$$

9–72. Continued

Then

$\sigma_{x'} = 0.5556 - 0.5984 \cos 81.80° = 0.4702 \text{ MPa} = 470 \text{ kPa}$ **Ans.**

$\tau_{x'y'} = 0.5984 \sin 81.80° = 0.5922 \text{ MPa} = 592 \text{ kPa}$ **Ans.**

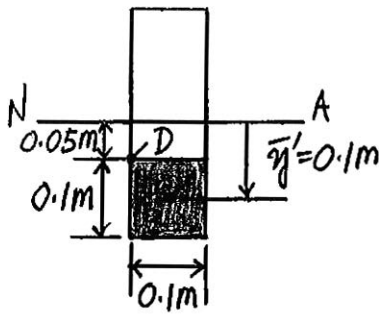

(b)

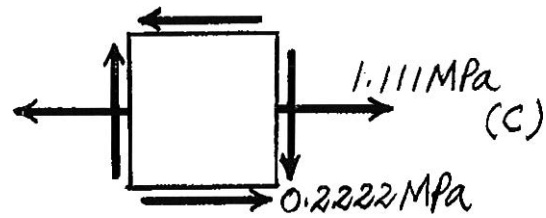

(c)

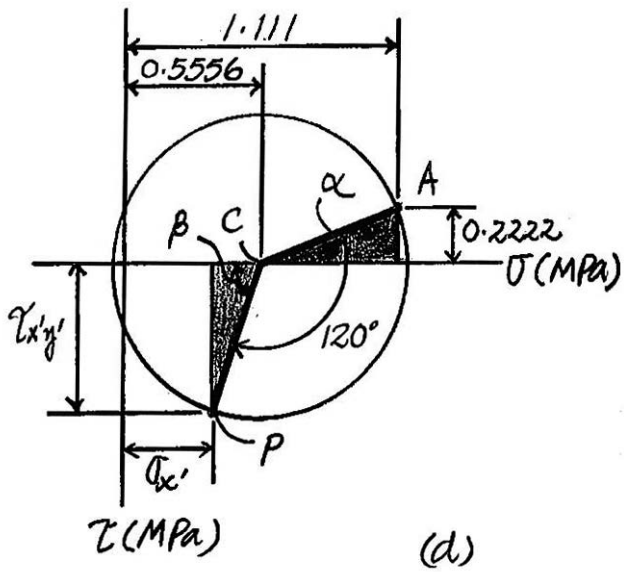

(d)

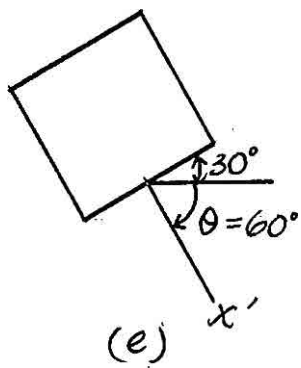

(e)

9–73. Determine the principal stress at point D, which is located just to the left of the 10-kN force.

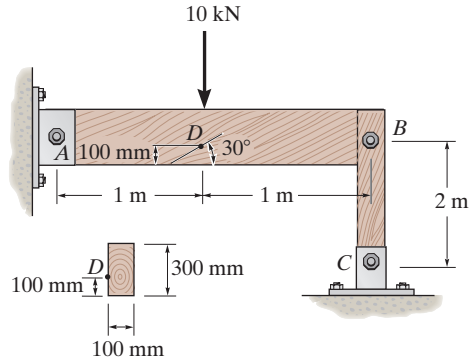

Using the method of section and consider the FBD of the left cut segment, Fig. a,

$+\uparrow \Sigma F_y = 0; \qquad 5 - V = 0 \qquad V = 5\text{ kN}$

$\circlearrowleft + \Sigma M_C = 0; \qquad M - 5(1) = 0 \qquad M = 5\text{ kN}\cdot\text{m}$

$$I = \frac{1}{12}(0.1)(0.3^3) = 0.225(10^{-3})\text{ m}^4$$

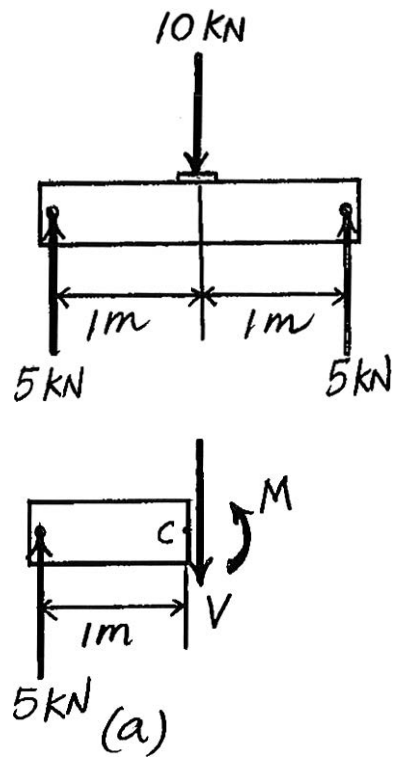

Referring to Fig. b,

$$Q_D = \bar{y}'A' = 0.1(0.1)(0.1) = 0.001\text{ m}^3$$

The normal stress developed is contributed by bending stress only. For point D, $y = 0.05$ m

$$\sigma = \frac{My}{I} = \frac{5(10^3)(0.05)}{0.225(10^{-3})} = 1.111\text{ MPa (T)}$$

The shear stress is contributed by the transverse shear stress only. Thus,

$$\tau = \frac{VQ_D}{It} = \frac{5(10^3)(0.001)}{0.225(10^{-3})(0.1)} = 0.2222\text{ MPa}$$

The state of stress at point D can be represented by the element shown in Fig. c.

In accordance with the established sign convention, $\sigma_x = 1.111$ MPa, $\sigma_y = 0$, and $\tau_{xy} = -0.2222$ MPa. Thus,

$$\sigma_{\text{avg}} = \frac{\sigma_x + \sigma_y}{2} = \frac{1.111 + 0}{2} = 0.5556\text{ MPa}$$

Then, the coordinate of reference point A and center C of the circle are

$$A(1.111, -0.2222) \qquad C(0.5556, 0)$$

Thus, the radius of the circle is

$$R = CA = \sqrt{(1.111 - 0.5556)^2 + (-0.2222)^2} = 0.5984\text{ MPa}$$

Using these results, the circle shown in Fig. d can be constructed.

In-Plane Principal Stresses. The coordinates of points B and D represent σ_1 and σ_2, respectively. Thus,

$$\sigma_1 = 0.5556 + 0.5984 = 1.15\text{ MPa} \qquad \textbf{Ans.}$$

$$\sigma_2 = 0.5556 - 0.5984 = -0.0428\text{ MPa} \qquad \textbf{Ans.}$$

9–73. Continued

Referring to the geometry of the circle, Fig. *d*,

$$\tan(2\theta_P)_1 = \frac{0.2222}{1.111 - 0.5556} = 0.4$$

$$(\theta_P)_1 = 10.9^\circ \ (Clockwise) \qquad \textbf{Ans.}$$

The state of principal stresses is represented by the element shown in Fig. *e*.

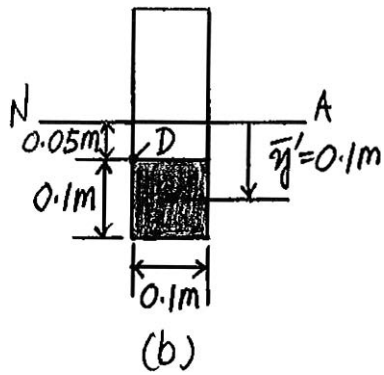

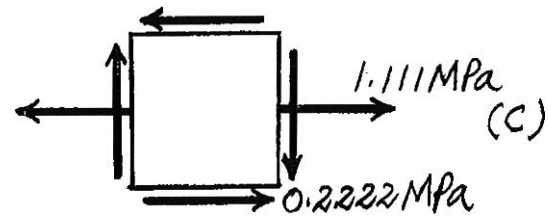

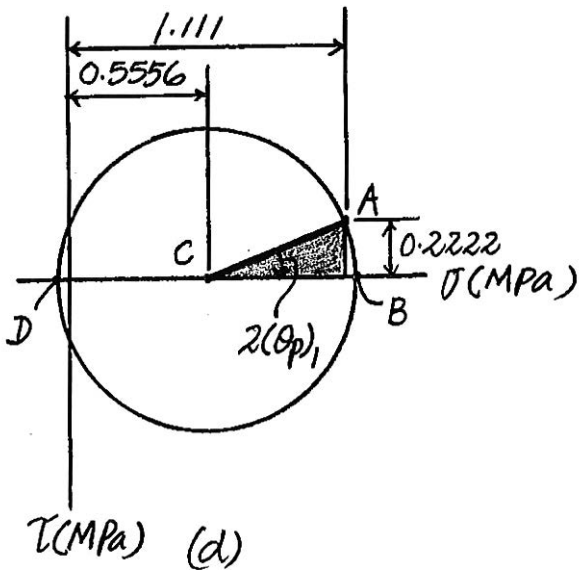

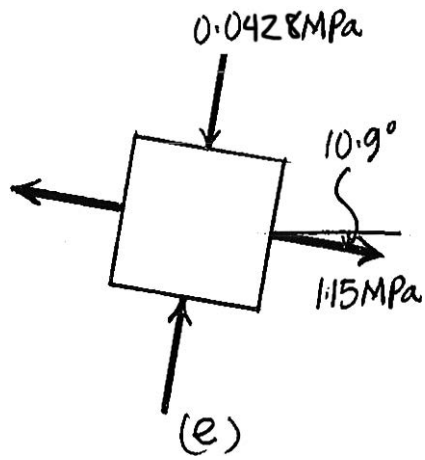

Ans:
$\sigma_1 = 1.15$ MPa, $\sigma_2 = -0.0428$ MPa

9–74. If the box wrench is subjected to the 50 lb force, determine the principal stress and maximum in-plane shear stress at point A on the cross section of the wrench at section a–a. Specify the orientation of these states of stress and indicate the results on elements at the point.

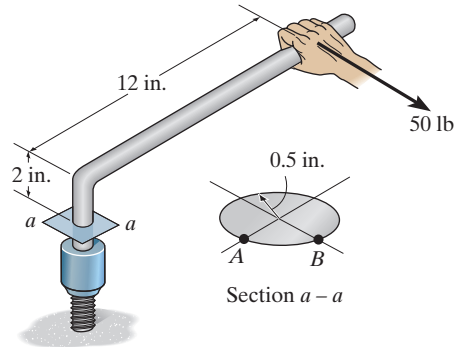

Internal Loadings: Considering the equilibrium of the free-body diagram of the wrench's segment, Fig. a,

$$\Sigma F_y = 0; \qquad V_y + 50 = 0 \qquad V_y = -50 \text{ lb}$$

$$\Sigma M_x = 0; \qquad T + 50(12) = 0 \qquad T = -600 \text{ lb}\cdot\text{in}$$

$$\Sigma M_z = 0; \qquad M_z - 50(2) = 0 \qquad M_z = 100 \text{ lb}\cdot\text{in}$$

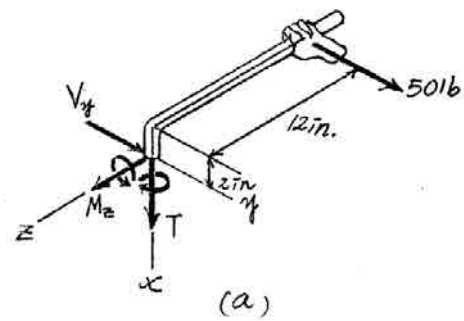

Section Properties: The moment of inertia about the z axis and the polar moment of inertia of the wrench's cross section are

$$I_z = \frac{\pi}{4}(0.5^4) = 0.015625\pi \text{ in}^4$$

$$J = \frac{\pi}{2}(0.5^4) = 0.03125\pi \text{ in}^4$$

Referring to Fig. b,

$$(Q_y)_A = \bar{y}'A' = \frac{4(0.5)}{3\pi}\left[\frac{\pi}{2}(0.5^2)\right] = 0.08333 \text{ in}^3$$

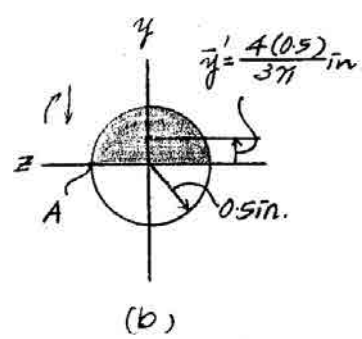

Normal and Shear Stress: The shear stress of point A along the z axis is $(\tau_{xz})_A = 0$. However, the shear stress along the y axis is a combination of torsional and transverse shear stress.

$$(\tau_{xy})_A = [(\tau_{xy})_T]_A - [(\tau_{xy})_V]_A$$

$$= \frac{Tc}{J} + \frac{V_y(Q_y)_A}{I_z t}$$

$$= \frac{600(0.5)}{0.03125\pi} + \frac{-50(0.08333)}{0.015625\pi(1)} = 2.971 \text{ ksi}$$

The state of stress at point A is represented by the two-dimensional element shown in Fig. c.

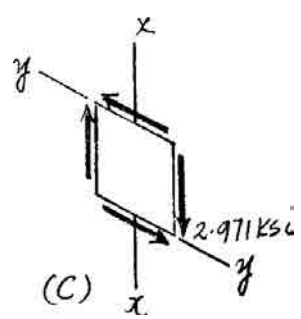

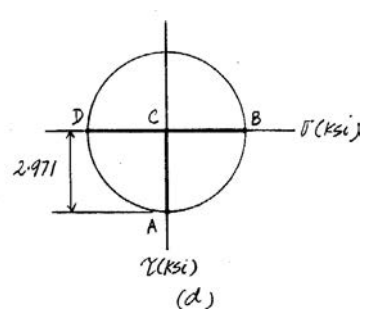

9–74. Continued

Construction of the Circle: $\sigma_x = \sigma_y = 0$, and $\tau_{xy} = 2.971$ ksi. Thus,

$$\sigma_{avg} = \frac{\sigma_x + \sigma_y}{2} = \frac{0 + 0}{2} = 0$$

The coordinates of reference point A and the center C of the circle are

$A(0, 2.971)$ $\qquad$ $C(0, 0)$

Thus, the radius of the circle is

$$R = CA = \sqrt{(0 - 0)^2 + 2.971^2} = 2.971 \text{ ksi}$$

Using these results, the circle is shown in Fig. *d*.

In-Plane Principal Stress: The coordinates of reference points B and D represent σ_1 and σ_2, respectively.

$$\sigma_1 = 0 + 2.971 = 2.97 \text{ ksi} \qquad \textbf{Ans.}$$

$$\sigma_2 = 0 - 2.971 = -2.97 \text{ ksi} \qquad \textbf{Ans.}$$

Maximum In-Plane Shear Stress: Since there is no normal stress acting on the element,

$$\tau_{\substack{max \\ in\text{-}plane}} = (\tau_{xy})_A = 2.97 \text{ ksi} \qquad \textbf{Ans.}$$

Ans:
$\sigma_1 = 2.97$ ksi, $\sigma_2 = -2.97$ ksi, $\theta_{p1} = 45.0°$,
$\theta_{p2} = -45.0°$, $\tau_{\substack{max \\ in\text{-}plane}} = 2.97$ ksi, $\theta_s = 0°$

9–75. If the box wrench is subjected to the 50 lb force, determine the principal stress and maximum in-plane shear stress at point B on the cross section of the wrench at section a–a. Specify the orientation of these states of stress and indicate the results on elements at the point.

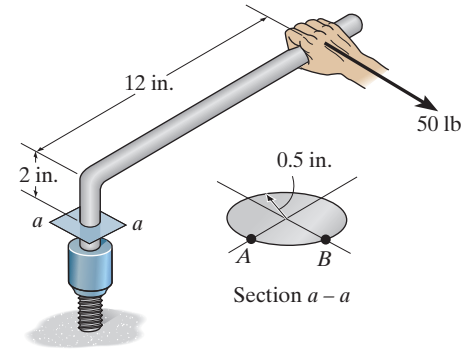

Internal Loadings: Considering the equilibrium of the free-body diagram of the wrench's cut segment, Fig. a,

$$\Sigma F_y = 0; \qquad V_y + 50 = 0 \qquad V_y = -50 \text{ lb}$$

$$\Sigma M_x = 0; \qquad T + 50(12) = 0 \qquad T = -600 \text{ lb} \cdot \text{in}$$

$$\Sigma M_z = 0; \qquad M_z - 50(2) = 0 \qquad M_z = 100 \text{ lb} \cdot \text{in}$$

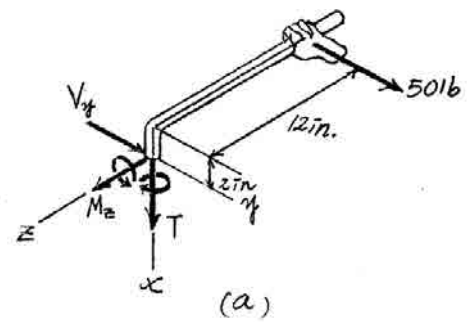

Section Properties: The moment of inertia about the z axis and the polar moment of inertia of the wrench's cross section are

$$I_z = \frac{\pi}{4}(0.5^4) = 0.015625\pi \text{ in}^4$$

$$J = \frac{\pi}{2}(0.5^4) = 0.03125\pi \text{ in}^4$$

Referring to Fig. b,

$$(Q_y)_B = 0$$

Normal and Shear Stress: The normal stress is caused by the bending stress due to $\mathbf{M}_z$.

$$(\sigma_x)_B = -\frac{M_z y_B}{I_z} = -\frac{100(0.5)}{0.015625\pi} = -1.019 \text{ ksi}$$

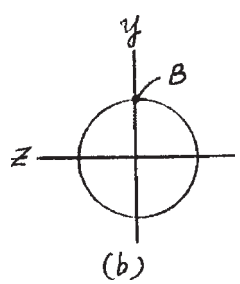

The shear stress at point B along the y axis is $(\tau_{xy})_B = 0$ since $(Q_y)_B$. However, the shear stress along the z axis is caused by torsion.

$$(\tau_{xz})_B = \frac{Tc}{J} = \frac{600(0.5)}{0.03125\pi} = 3.056 \text{ ksi}$$

The state of stress at point B is represented by the two-dimensional element shown in Fig. c.

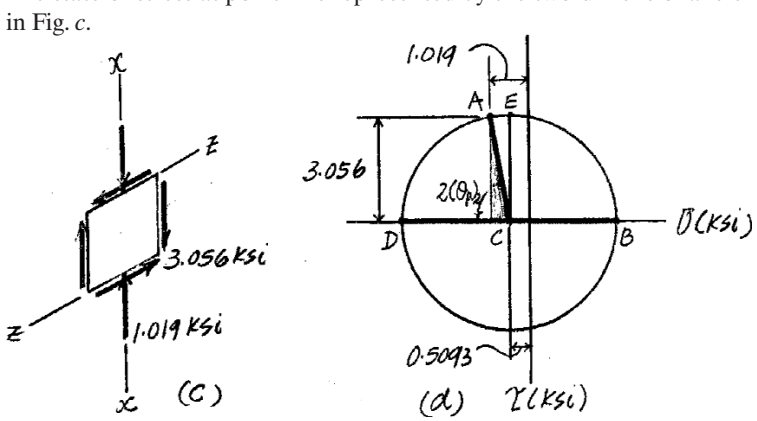

9–75. Continued

Construction of the Circle: $\sigma_x = -1.019$ ksi, $\sigma_z = 0$, and $\tau_{xz} = -3.056$ ksi. Thus,

$$\sigma_{avg} = \frac{\sigma_x + \sigma_y}{2} = \frac{-1.019 + 0}{2} = -0.5093 \text{ ksi}$$

The coordinates of reference point A and the center C of the circle are

$$A(-1.019, -3.056) \qquad\qquad C(-0.5093, 0)$$

Thus, the radius of the circle is

$$R = CA = \sqrt{[-1.019 - (-0.5093)]^2 + (-3.056)^2} = 3.0979 \text{ ksi}$$

Using these results, the circle is shown in Fig. *d*.

In-Plane Principal Stress: The coordinates of reference points B and D represent σ_1 and σ_2, respectively.

$$\sigma_1 = -0.5093 + 3.0979 = 2.59 \text{ ksi} \qquad \textbf{Ans.}$$

$$\sigma_2 = -0.5093 - 3.0979 = -3.61 \text{ ksi} \qquad \textbf{Ans.}$$

Maximum In-Plane Shear Stress: The coordinates of point E represent the maximum in-plane stress, Fig. *a*.

$$\tau_{\substack{max \\ in\text{-}plane}} = R = 3.10 \text{ ksi} \qquad \textbf{Ans.}$$

Ans:
$\sigma_1 = 2.59$ ksi, $\sigma_2 = -3.61$ ksi, $\theta_{p1} = -40.3°$,
$\theta_{p2} = 49.7$, $\tau_{\substack{max \\ in\text{-}plane}} = 3.10$ ksi, $\theta_s = 4.73°$

***9–76.** The ladder is supported on the rough surface at A and by a smooth wall at B. If a man weighing 150 lb stands upright at C, determine the principal stresses in one of the legs at point D. Each leg is made from a 1-in.-thick board having a rectangular cross section. Assume that the total weight of the man is exerted vertically on the rung at C and is shared equally by each of the ladder's two legs. Neglect the weight of the ladder and the forces developed by the man's arms.

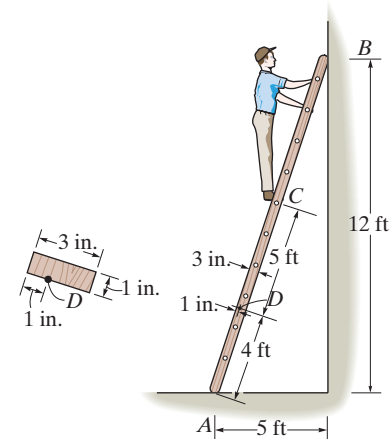

$A = 3(1) = 3 \text{ in}^2 \qquad I = \frac{1}{12}(1)(3^3) = 2.25 \text{ in}^4$

$Q_D = y'A' = (1)(1)(1) = 1 \text{ in}^3$

$$\sigma_D = \frac{-P}{A} - \frac{My}{I} = \frac{-77.55}{3} - \frac{35.52(12)(0.5)}{2.25} = -120.570 \text{ psi}$$

$$\tau_D = \frac{VQ_D}{It} = \frac{8.88(1)}{2.25(1)} = 3.947 \text{ psi}$$

$A(-120.57, -3.947) \qquad B(0, 3.947) \qquad C(-60.285, 0)$

$R = \sqrt{(60.285)^2 + (3.947)^2} = 60.412$

$\sigma_1 = -60.285 + 60.4125 = 0.129 \text{ psi}$ **Ans.**

$\sigma_2 = -60.285 - 60.4125 = -121 \text{ psi}$ **Ans.**

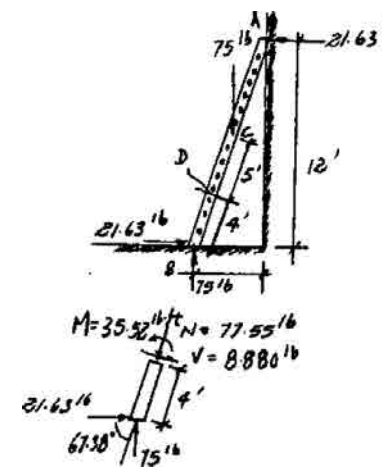

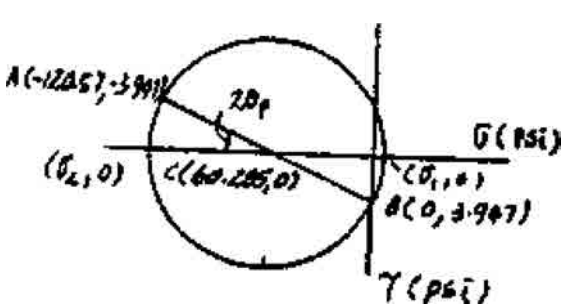

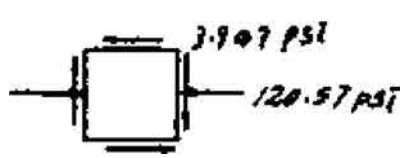

9–77. Draw the three Mohr's circles that describe each of the following states of stress.

(a) Here, $\sigma_{min} = 0$, $\sigma_{int} = 3$ ksi and $\sigma_{max} = 5$ ksi. The three Mohr's circles of this state of stress are shown in Fig. *a*

(b) Here, $\sigma_{min} = 0$, $\sigma_{int} = 140$ MPa and $\sigma_{max} = 180$ MPa. The three Mohr's circles of this state of stress are shown in Fig. *b*

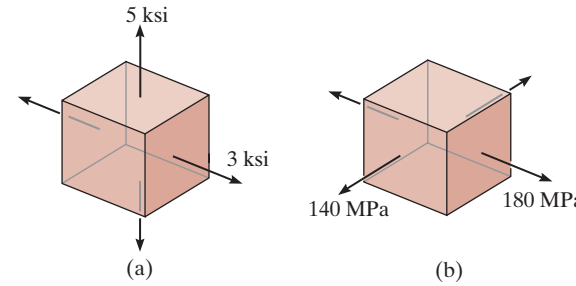

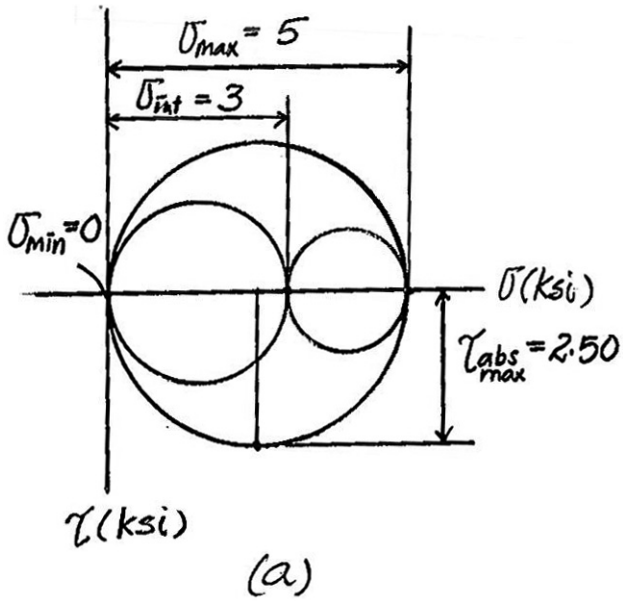

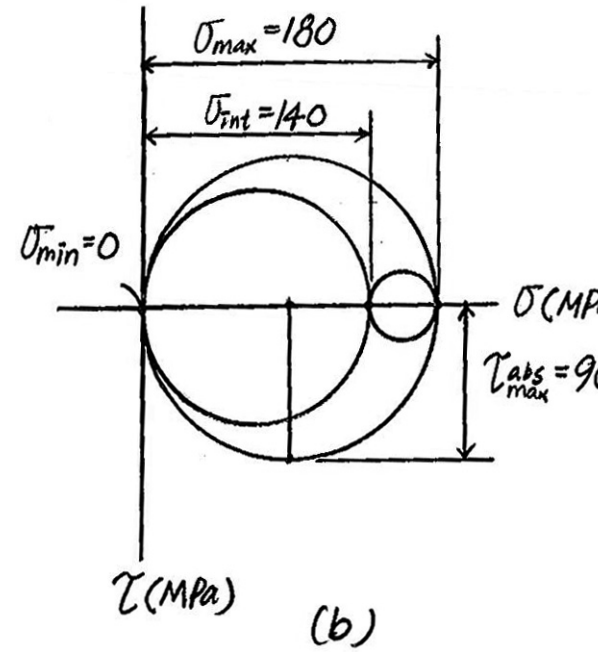

9–78. Draw the three Mohr's circles that describe the following state of stress.

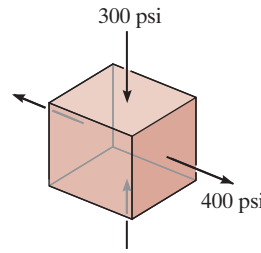

Here, $\sigma_{min} = -300$ psi, $\sigma_{int} = 0$ and $\sigma_{max} = 400$ psi. The three Mohr's circles for this state of stress are shown in Fig. *a*.

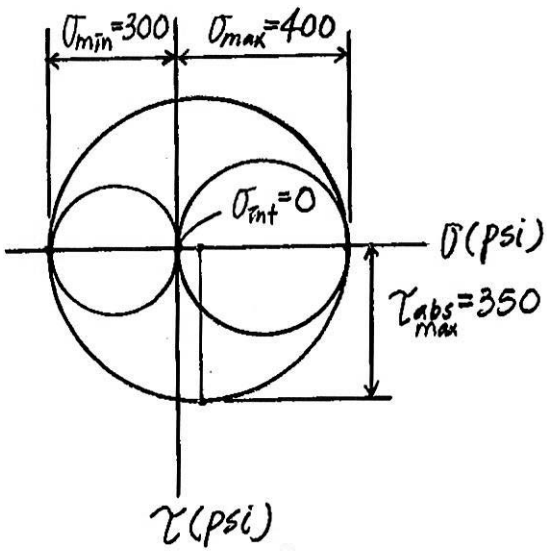

(a)

9–79. The stress at a point is shown on the element. Determine the principal stresses and the absolute maximum shear stress.

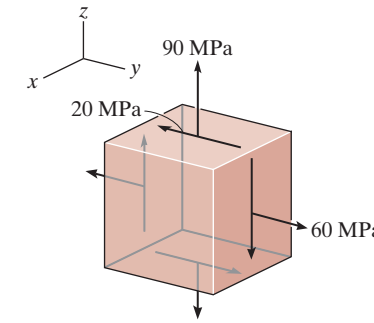

For $y - z$ plane:

The center of the cricle is at $\sigma_{\text{Avg}} = \dfrac{\sigma_y + \sigma_z}{2} = \dfrac{60 + 90}{2} = 75 \text{ MPa}$

$$R = \sqrt{(75 - 60)^2 + (-20)^2} = 25 \text{ MPa}$$

$$\sigma_1 = 75 + 25 = 100 \text{ MPa}$$

$$\sigma_2 = 75 - 25 = 50 \text{ MPa}$$

Thus,

$$\sigma_1 = 100 \qquad \textbf{Ans.}$$

$$\sigma_2 = 50 \text{ MPa} \qquad \textbf{Ans.}$$

$$\sigma_3 = 0 \text{ MPa} \qquad \textbf{Ans.}$$

$$\tau_{\substack{\text{abs}\\\text{max}}} = \frac{\sigma_{\max} - \sigma_{\min}}{2} = \frac{100 - 0}{2} = 50 \text{ MPa} \qquad \textbf{Ans.}$$

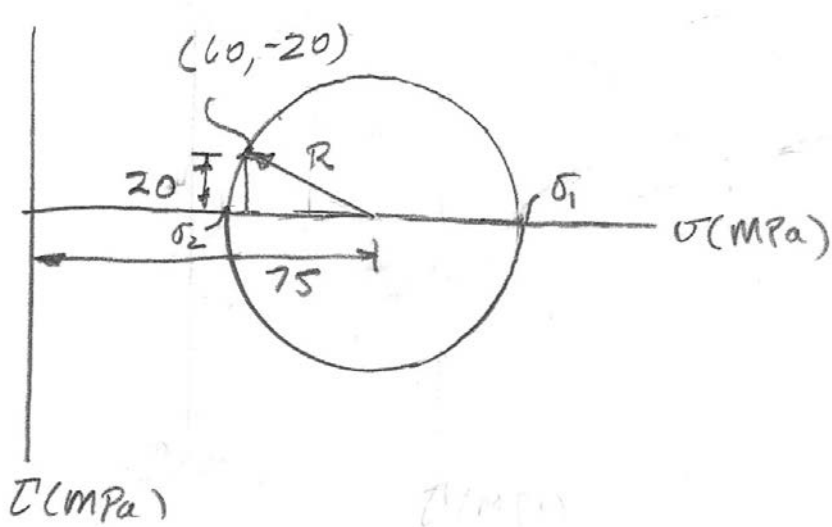

Ans:
$\sigma_1 = 100 \text{ MPa}, \sigma_2 = 50 \text{ MPa}, \sigma_3 = 0,$
$\tau_{\substack{\text{abs}\\\text{max}}} = 50 \text{ MPa}$

***9–80.** The stress at a point is shown on the element. Determine the principal stresses and the absolute maximum shear stress.

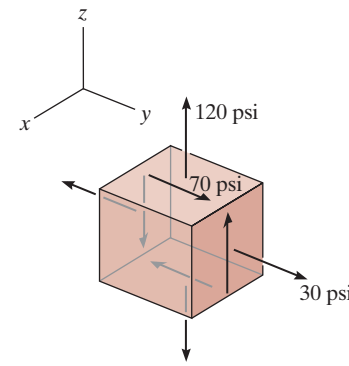

Mohr's circle for the element in the y–z plane, Fig. a, will be drawn first. In accordance with the established sign convention, $\sigma_y = 30$ psi, $\sigma_z = 120$ psi and $\tau_{yz} = 70$ psi. Thus

$$\sigma_{avg} = \frac{\sigma_y + \sigma_z}{2} = \frac{30 + 120}{2} = 75 \text{ psi}$$

Thus the coordinates of reference point A and the center C of the circle are

$$A(30, 70) \qquad C(75, 0)$$

Thus, the radius of the circle is

$$R = CA = \sqrt{(75 - 30)^2 + 70^2} = 83.217 \text{ psi}$$

Using these results, the circle shown in Fig. b.

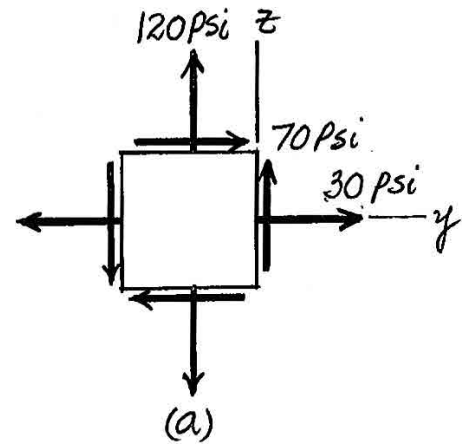

The coordinates of point B and D represent the principal stresses

From the results,

$$\sigma_{max} = 158 \text{ psi} \qquad \sigma_{min} = -8.22 \text{ psi} \qquad \sigma_{int} = 0 \text{ psi} \qquad \textbf{Ans.}$$

Using these results, the three Mohr's circles are shown in Fig. c,

From the geometry of the three circles,

$$\tau_{\substack{abs\\max}} = \frac{\sigma_{max} - \sigma_{min}}{2} = \frac{158.22 - (-8.22)}{2} = 83.2 \text{ psi} \qquad \textbf{Ans.}$$

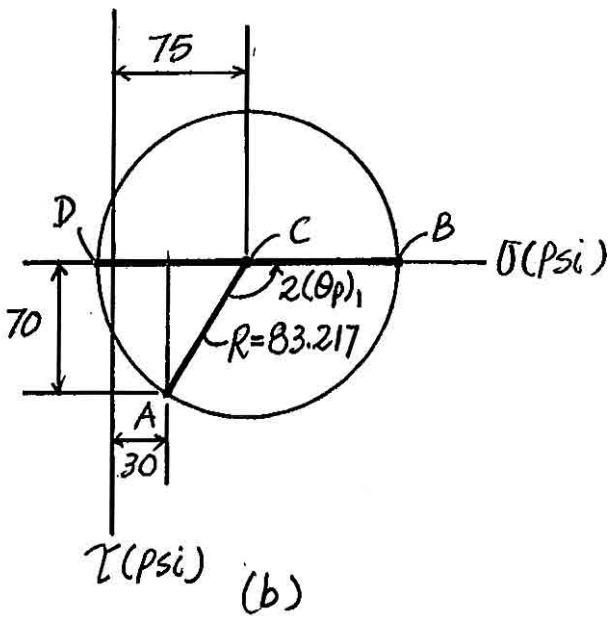

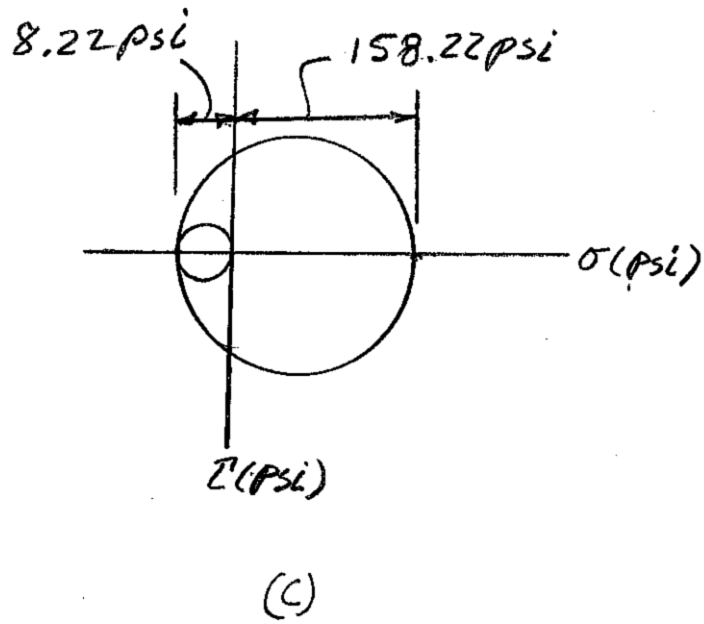

***9–81.** The stress at a point is shown on the element. Determine the principal stresses and the absolute maximum shear stress.

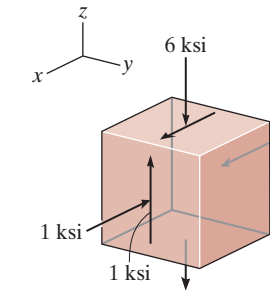

Mohr's circle for the element in x–z plane, Fig. a, will be drawn first. In accordance with the established sign convention, $\sigma_x = -1$ ksi, $\sigma_z = 0$ and $\tau_{xz} = 6$ ksi. Thus

$$\sigma_{avg} = \frac{\sigma_x + \sigma_z}{2} = \frac{-1 - 6}{2} = -3.5 \text{ ksi}$$

Thus, the coordinates of reference point A and the center C of the circle are

$$A(-1, 1) \qquad C(-3.5, 0)$$

Thus, the radius of the circle is

$$R = CA = \sqrt{[-1 - (-3.5)]^2 + 1^2} = 2.69 \text{ ksi}$$

Using these results, the circle is shown in Fig. b,

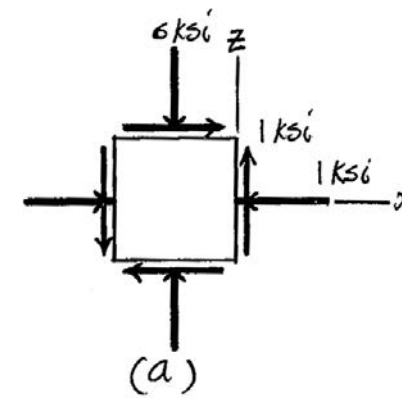

The coordinates of points B and D represent σ_2 and σ_3, respectively.

$$\sigma_2 = -(3.5 - 2.69) = -0.807 \text{ ksi}$$

$$\sigma_3 = -(3.5 + 2.69) = -6.19 \text{ ksi}$$

From the results obtained,

$$\sigma_2 = -0.807 \text{ ksi} \qquad \sigma_3 = -6.19 \text{ ksi} \qquad \sigma_1 = 0 \text{ ksi} \qquad \textbf{Ans.}$$

$$\tau_{\substack{abs\\max}} = \frac{\sigma_{max} - \sigma_{min}}{2} = \frac{-6.19 - 0}{2} = -3.10 \text{ ksi} \qquad \textbf{Ans.}$$

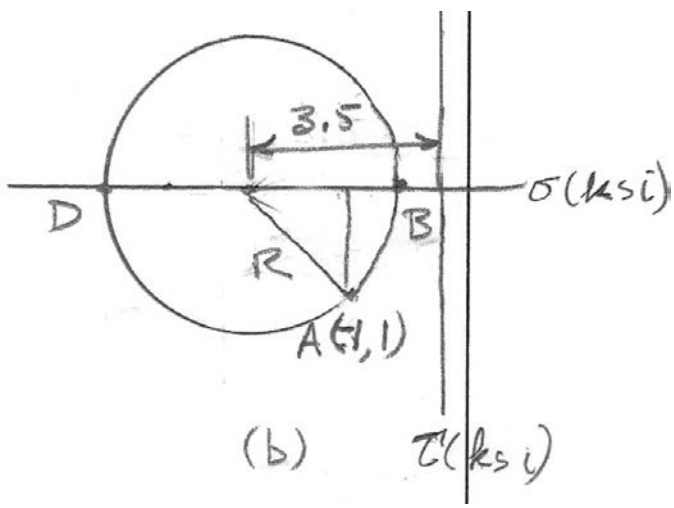

Ans:
$\sigma_2 = -0.807$ ksi, $\sigma_3 = -6.19$ ksi, $\sigma_1 = 0$,
$\tau_{\substack{abs\\max}} = -3.10$ ksi

9–82. The stress at a point is shown on the element. Determine the principal stresses and the absolute maximum shear stress.

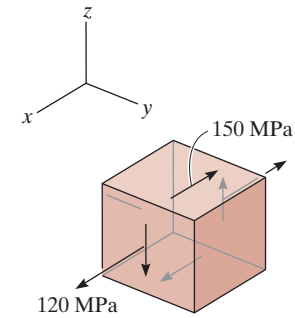

For $x - z$ plane:

$R = CA = \sqrt{(120 - 60)^2 + 150^2} = 161.55$

$\sigma_1 = 60 + 161.55 = 221.55$ MPa

$\sigma_2 = 60 - 161.55 = -101.55$ MPa

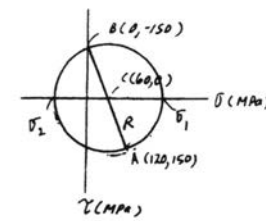

$\sigma_1 = 222$ MPa $\quad \sigma_2 = 0$ MPa $\quad \sigma_3 = -102$ MPa **Ans.**

$\tau_{\substack{\text{abs}\\\text{max}}} = \dfrac{\sigma_{\max} - \sigma_{\min}}{2} = \dfrac{221.55 - (-101.55)}{2} = 162$ MPa **Ans.**

Ans:
$\sigma_1 = 222$ MPa, $\sigma_2 = 0$ MPa, $\sigma_3 = -102$ MPa,
$\tau_{\substack{\text{abs}\\\text{max}}} = 162$ MPa

9–83. The state of stress at a point is shown on the element. Determine the principal stresses and the absolute maximum shear stress.

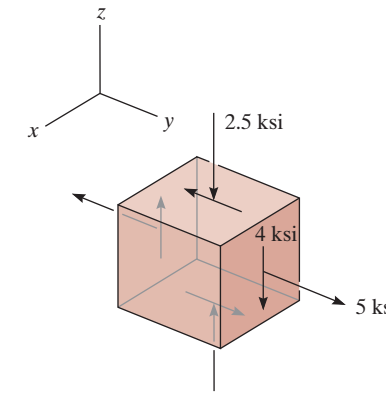

For y - z plane:

$$A(5, -4) \qquad B(-2.5, 4) \qquad C(1.25, 0)$$

$$R = \sqrt{3.75^2 + 4^2} = 5.483$$

$$\sigma_1 = 1.25 + 5.483 = 6.733 \text{ ksi}$$

$$\sigma_2 = 1.25 - 5.483 = -4.233 \text{ ksi}$$

Thus,

$$\sigma_1 = 6.73 \text{ ksi} \qquad \textbf{Ans.}$$

$$\sigma_2 = 0 \qquad \textbf{Ans.}$$

$$\sigma_3 = -4.23 \text{ ksi} \qquad \textbf{Ans.}$$

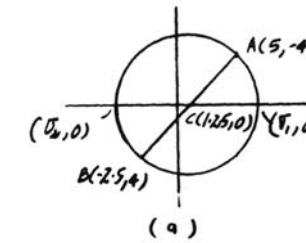

$$\sigma_{avg} = \frac{6.73 + (-4.23)}{2} = 1.25 \text{ ksi}$$

$$\tau_{\substack{abs \\ max}} = \frac{\sigma_{max} - \sigma_{min}}{2} = \frac{6.73 - (-4.23)}{2} = 5.48 \text{ ksi} \qquad \textbf{Ans.}$$

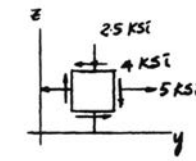

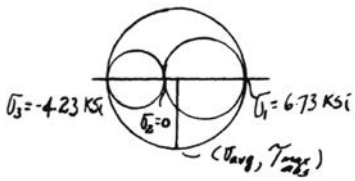

Ans:
$\sigma_1 = 6.73$ ksi, $\sigma_2 = 0$, $\sigma_3 = -4.23$ ksi,
$\tau_{\substack{abs \\ max}} = 5.48$ ksi

9–85. The solid cylinder having a radius r is placed in a sealed container and subjected to a pressure p. Determine the stress components acting at point A located on the center line of the cylinder. Draw Mohr's circles for the element at this point.

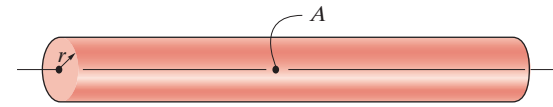

$$-\sigma(dz)(2r) = \int_0^{\pi} p(r\,d\theta)\,dz\,\sin\theta$$

$$-2\sigma = p\int_0^{\theta} \sin\theta\,d\theta = p(-\cos\theta)\Big|_0^{\pi}$$

$$\sigma = -p$$

The stress in every direction is $\sigma_1 = \sigma_2 = \sigma_3 = -p$ **Ans.**

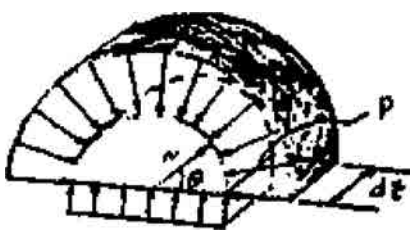

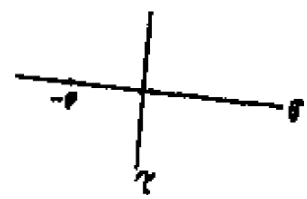

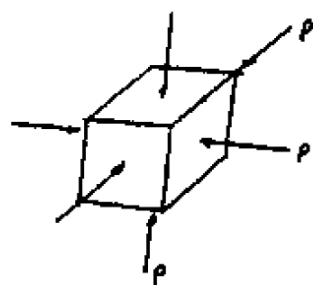

Ans:
The stress in every direction is
$\sigma_1 = \sigma_2 = \sigma_3 = -p$

9–86. The plate is subjected to a tensile force $P = 5$ kip. If it has the dimensions shown, determine the principal stresses and the absolute maximum shear stress. If the material is ductile it will fail in shear. Make a sketch of the plate showing how this failure would appear. If the material is brittle the plate will fail due to the principal stresses. Show how this failure occurs.

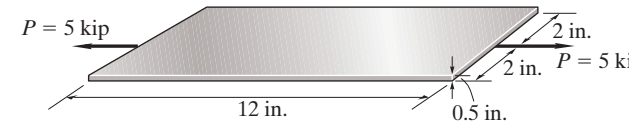

$$\sigma = \frac{P}{A} = \frac{5000}{(4)(0.5)} = 2500 \text{ psi} = 2.50 \text{ ksi}$$

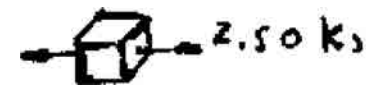

$\sigma_1 = 2.50$ ksi **Ans.**

$\sigma_2 = \sigma_3 = 0$ **Ans.**

$\tau_{\substack{\text{abs}\\\text{max}}} = \dfrac{\sigma_1}{2} = 1.25$ ksi **Ans.**

Failure by shear:

Failure by principal stress:

Ans:
$\sigma_1 = 2.50$ ksi, $\sigma_2 = \sigma_3 = 0$, $\tau_{\substack{\text{abs}\\\text{max}}} = 1.25$ ksi

9–87. Determine the principal stresses and absolute maximum shear stress developed at point A on the cross section of the bracket at section a–a.

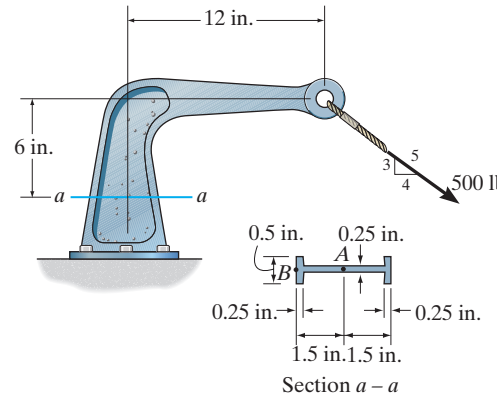

Internal Loadings: Considering the equilibrium of the free-body diagram of the bracket's upper cut segment, Fig. a,

$$+\uparrow \Sigma F_y = 0; \qquad N - 500\left(\frac{3}{5}\right) = 0 \qquad N = 300 \text{ lb}$$

$$\overset{+}{\leftarrow} \Sigma F_x = 0; \qquad V - 500\left(\frac{4}{5}\right) = 0 \qquad V = 400 \text{ lb}$$

$$\Sigma M_O = 0; \; M - 500\left(\frac{3}{5}\right)(12) - 500\left(\frac{4}{5}\right)(6) = 0 \qquad M = 6000 \text{ lb} \cdot \text{in}$$

Section Properties: The cross-sectional area and the moment of inertia of the bracket's cross section are

$$A = 0.5(3) - 0.25(2.5) = 0.875 \text{ in}^2$$

$$I = \frac{1}{12}(0.5)\left(3^3\right) - \frac{1}{12}(0.25)\left(2.5^3\right) = 0.79948 \text{ in}^4$$

Referring to Fig. b.

$$Q_A = \bar{x}_1' A_1' + \bar{x}_2' A_2' = 0.625(1.25)(0.25) + 1.375(0.25)(0.5) = 0.3672 \text{ in}^3$$

Normal and Shear Stress: The normal stress is

$$\sigma_A = \frac{N}{A} = -\frac{300}{0.875} = -342.86 \text{ psi}$$

The shear stress is contributed by the transverse shear stress.

$$\tau_A = \frac{VQ_A}{It} = \frac{400(0.3672)}{0.79948(0.25)} = 734.85 \text{ psi}$$

The state of stress at point A is represented by the element shown in Fig. c.

Construction of the Circle: $\sigma_x = 0, \sigma_y = -342.86$ psi, and $\tau_{xy} = 734.85$. Thus,

$$\sigma_{\text{avg}} = \frac{\sigma_x + \sigma_y}{2} = \frac{0 + (-342.86)}{2} = -171.43 \text{ psi}$$

The coordinates of reference point A and the center C of the circle are

$$A(0, 734.85) \qquad C(-171.43, 0)$$

Thus, the radius of the circle is

$$R = CA = \sqrt{[0 - (-171.43)]^2 + 734.85^2} = 754.58 \text{ psi}$$

9–87. Continued

Using these results, the circle is shown in Fig. *d*.

In-Plane Principal Stresses: The coordinates of reference point B and D represent σ_1 and σ_2, respectively.

$$\sigma_1 = -171.43 + 754.58 = 583.2 \text{ psi}$$

$$\sigma_2 = -171.43 - 754.58 = -926.0 \text{ psi}$$

Three Mohr's Circles: Using these results,

$$\sigma_{max} = 583 \text{ psi} \qquad \sigma_{int} = 0 \quad \sigma_{min} = -926 \text{ psi} \qquad \textbf{Ans.}$$

Absolute Maximum Shear Stress:

$$\tau_{\substack{abs\\max}} = \frac{\sigma_{max} - \sigma_{min}}{2} = \frac{583.2 - (-926.0)}{2} = 755 \text{ psi} \qquad \textbf{Ans.}$$

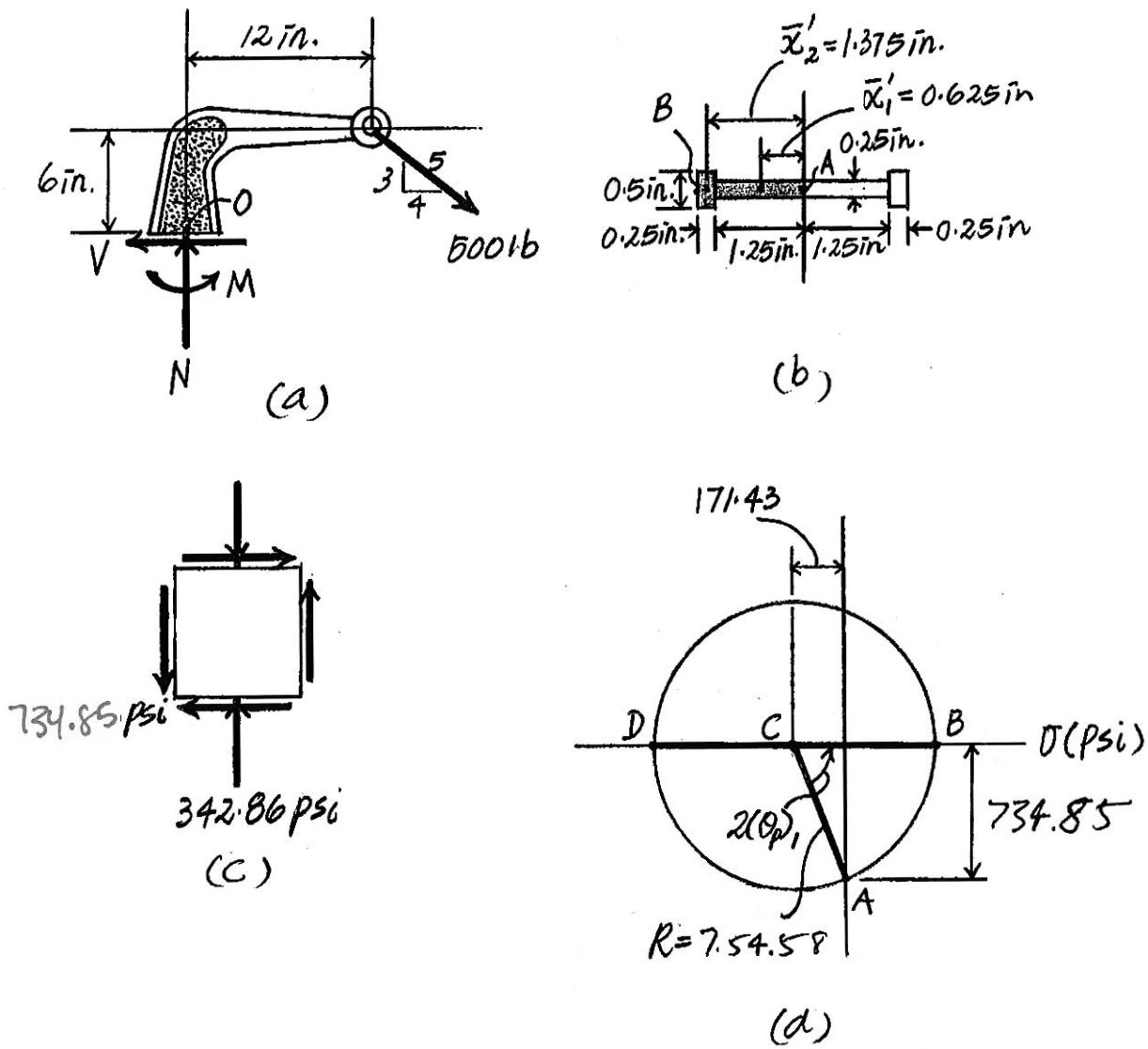

Ans:
$\sigma_1 = 583$ psi, $\sigma_2 = 0$, $\sigma_3 = -926$ psi,
$\tau_{\substack{abs\\max}} = 755$ psi

***9–88.** Determine the principal stresses and absolute maximum shear stress developed at point B on the cross section of the bracket at section a–a.

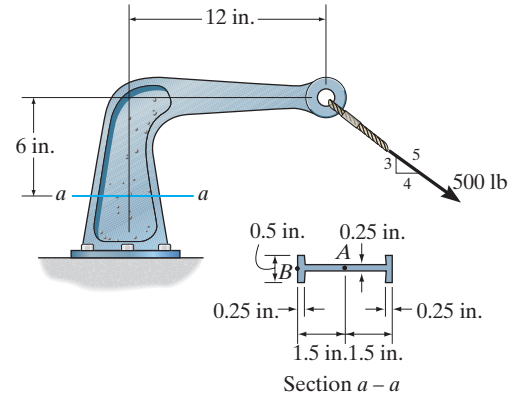

Internal Loadings: Considering the equilibrium of the free-body diagram of the bracket's upper cut segment, Fig. a,

$$+\uparrow \Sigma F_y = 0; \qquad N - 500\left(\frac{3}{5}\right) = 0 \qquad N = 300 \text{ lb}$$

$$\overset{+}{\leftarrow} \Sigma F_x = 0; \qquad V - 500\left(\frac{4}{5}\right) = 0 \qquad V = 400 \text{ lb}$$

$$\Sigma M_O = 0; \; M - 500\left(\frac{3}{5}\right)(12) - 500\left(\frac{4}{5}\right)(6) = 0 \qquad M = 6000 \text{ lb} \cdot \text{in}$$

Section Properties: The cross-sectional area and the moment of inertia about the centroidal axis of the bracket's cross section are

$$A = 0.5(3) - 0.25(2.5) = 0.875 \text{ in}^2$$

$$I = \frac{1}{12}(0.5)\left(3^3\right) - \frac{1}{12}(0.25)\left(2.5^3\right) = 0.79948 \text{ in}^4$$

Referring to Fig. b,

$$Q_B = 0$$

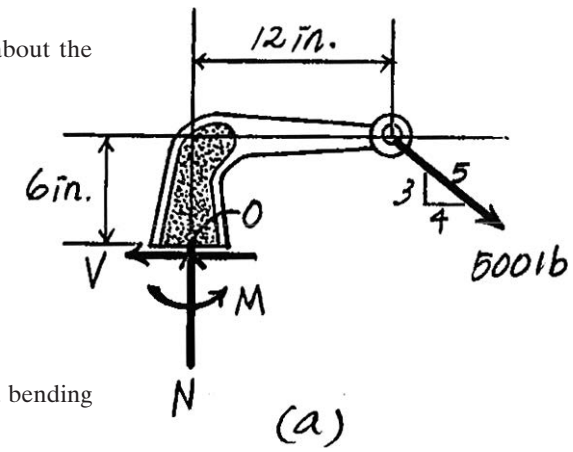

Normal and Shear Stress: The normal stress is a combination of axial and bending stress.

$$\sigma_B = \frac{N}{A} + \frac{Mx_B}{I} = -\frac{300}{0.875} + \frac{6000(1.5)}{0.79948} = 10.9 \text{ ksi}$$

Since $Q_B = 0$, $\tau_B = 0$. The state of stress at point B is represented on the element shown in Fig. c.

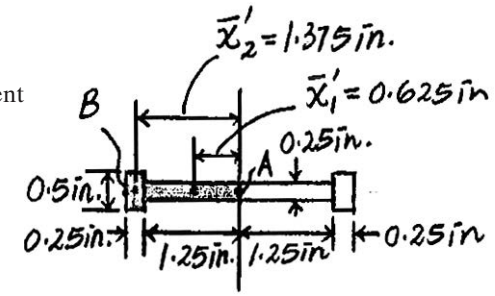

In-Plane Principal Stresses: Since no shear stress acts on the element,

$$\sigma_1 = 10.91 \text{ ksi} \qquad \sigma_2 = 0$$

Three Mohr's Circles: Using these results,

$$\sigma_{\max} = 10.91 \text{ ksi} \qquad \sigma_{\text{int}} = \sigma_{\min} = 0 \qquad \textbf{Ans.}$$

Absolute Maximum Shear Stress:

$$\tau_{\substack{\text{abs}\\ \max}} = \frac{\sigma_{\max} - \sigma_{\min}}{2} = \frac{10.91 - 0}{2} = 5.46 \text{ ksi} \qquad \textbf{Ans.}$$

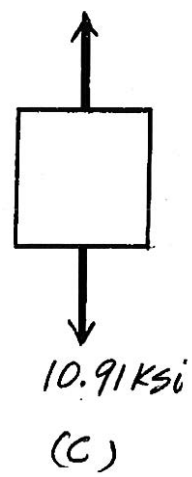

9–89. The solid propeller shaft on a ship extends outward from the hull. During operation it turns at $\omega = 15$ rad/s when the engine develops 900 kW of power. This causes a thrust of $F = 1.23$ MN on the shaft. If the shaft has an outer diameter of 250 mm, determine the principal stresses at any point located on the surface of the shaft.

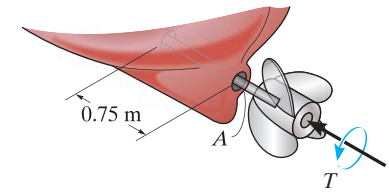

Power Transmission: Using the formula developed in Chapter 5,

$$P = 900\text{ kW} = 0.900\left(10^6\right)\text{ N}\cdot\text{m/s}$$

$$T_0 = \frac{P}{\omega} = \frac{0.900(10^6)}{15} = 60.0\left(10^3\right)\text{ N}\cdot\text{m}$$

Internal Torque and Force: As shown on FBD.

Section Properties:

$$A = \frac{\pi}{4}\left(0.25^2\right) = 0.015625\pi\text{ m}^2$$

$$J = \frac{\pi}{2}\left(0.125^4\right) = 0.3835\left(10^{-3}\right)\text{ m}^4$$

Normal Stress:

$$\sigma = \frac{N}{A} = \frac{-1.23(10^6)}{0.015625\pi} = -25.06\text{ MPa}$$

Shear Stress: Applying the torsion formula,

$$\tau = \frac{Tc}{J} = \frac{60.0(10^3)\,(0.125)}{0.3835(10^{-3})} = 19.56\text{ MPa}$$

In-Plane Principal Stresses: $\sigma_x = -25.06$ MPa, $\sigma_y = 0$ and $\tau_{xy} = 19.56$ MPa for any point on the shaft's surface. Applying Eq. 9-5,

$$\sigma_{1,2} = \frac{\sigma_x + \sigma_y}{2} \pm \sqrt{\left(\frac{\sigma_x - \sigma_y}{2}\right)^2 + \tau_{xy}^2}$$

$$= \frac{-25.06 + 0}{2} \pm \sqrt{\left(\frac{-25.06 - 0}{2}\right)^2 + (19.56)^2}$$

$$= -12.53 \pm 23.23$$

$$\sigma_1 = 10.7\text{ MPa} \qquad \sigma_2 = -35.8\text{ MPa}$$ **Ans.**

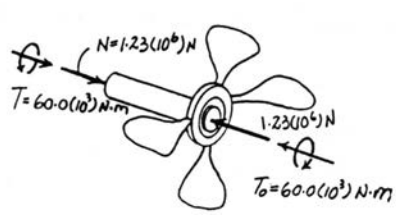

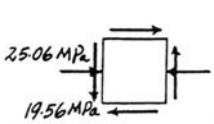

Ans:
$\sigma_1 = 10.7$ MPa, $\sigma_2 = -35.8$ MPa

9–90. The solid propeller shaft on a ship extends outward from the hull. During operation it turns at $\omega = 15$ rad/s when the engine develops 900 kW of power. This causes a thrust of $F = 1.23$ MN on the shaft. If the shaft has a diameter of 250 mm, determine the maximum in-plane shear stress at any point located on the surface of the shaft.

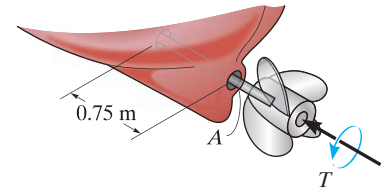

Power Transmission: Using the formula developed in Chapter 5,

$$P = 900 \text{ kW} = 0.900\left(10^6\right) \text{ N} \cdot \text{m/s}$$

$$T_0 = \frac{P}{\omega} = \frac{0.900(10^6)}{15} = 60.0\left(10^3\right) \text{ N} \cdot \text{m}$$

Internal Torque and Force: As shown on FBD.

Section Properties:

$$A = \frac{\pi}{4}\left(0.25^2\right) = 0.015625\pi \text{ m}^2$$

$$J = \frac{\pi}{2}\left(0.125^4\right) = 0.3835\left(10^{-3}\right) \text{ m}^4$$

Normal Stress:

$$\sigma = \frac{N}{A} = \frac{-1.23(10^6)}{0.015625\pi} = -25.06 \text{ MPa}$$

Shear Stress: Applying the torsion formula.

$$\tau = \frac{Tc}{J} = \frac{60.0(10^3)\,(0.125)}{0.3835\,(10^{-3})} = 19.56 \text{ MPa}$$

Maximum In-Plane Principal Shear Stress: $\sigma_x = -25.06$ MPa, $\sigma_y = 0$, and $\tau_{xy} = 19.56$ MPa for any point on the shaft's surface. Applying Eq. 9-7,

$$\tau_{\substack{\max \\ \text{in-plane}}} = \sqrt{\left(\frac{\sigma_x - \sigma_y}{2}\right)^2 + \tau_{xy}^2}$$

$$= \sqrt{\left(\frac{-25.06 - 0}{2}\right)^2 + (19.56)^2}$$

$$= 23.2 \text{ MPa} \qquad \textbf{Ans.}$$

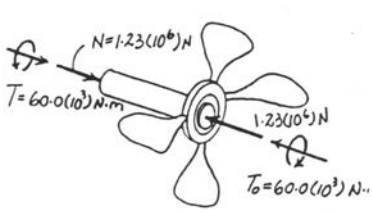

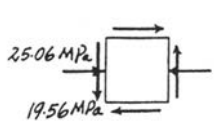

Ans:

$\tau_{\substack{\max \\ \text{in-plane}}} = 23.2$ MPa

9–91. The steel pipe has an inner diameter of 2.75 in. and an outer diameter of 3 in. If it is fixed at C and subjected to the horizontal 20-lb force acting on the handle of the pipe wrench at its end, determine the principal stresses in the pipe at point A, which is located on the surface of the pipe.

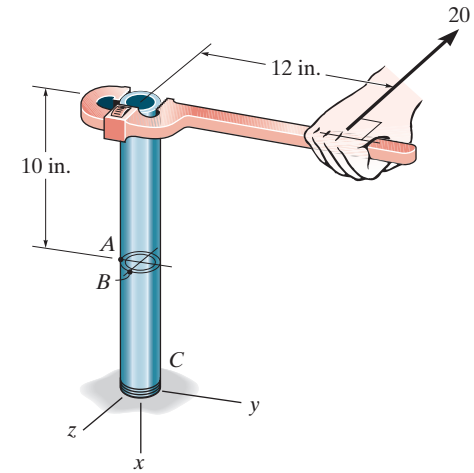

Internal Forces, Torque and Moment: As shown on FBD.

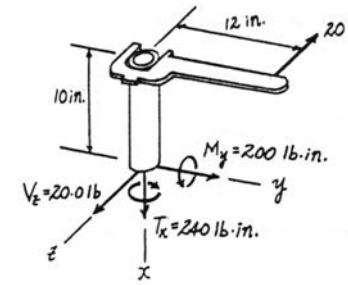

Section Properties:

$$I = \frac{\pi}{4}\left(1.5^4 - 1.375^4\right) = 1.1687 \text{ in}^4$$

$$J = \frac{\pi}{2}\left(1.5^4 - 1.375^4\right) = 2.3374 \text{ in}^4$$

$$(Q_A)_z = \Sigma \bar{y}' A'$$

$$= \frac{4(1.5)}{3\pi}\left[\frac{1}{2}\pi\left(1.5^2\right)\right] - \frac{4(1.375)}{3\pi}\left[\frac{1}{2}\pi\left(1.375^2\right)\right]$$

$$= 0.51693 \text{ in}^3$$

Normal Stress: Applying the flexure formula $\sigma = \dfrac{M_y z}{I_y}$,

$$\sigma_A = \frac{200(0)}{1.1687} = 0$$

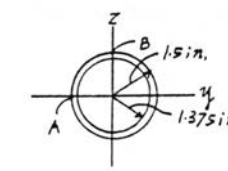

Shear Stress: The transverse shear stress in the z direction and the torsional shear stress can be obtained using shear formula and torsion formula, $\tau_v = \dfrac{VQ}{It}$ and $\tau_{\text{twist}} = \dfrac{T\rho}{J}$, respectively.

$$\tau_A = (\tau_v)_z - \tau_{\text{twist}}$$

$$= \frac{20.0(0.51693)}{1.1687(2)(0.125)} - \frac{240(1.5)}{2.3374}$$

$$= -118.6 \text{ psi}$$

In-Plane Principal Stress: $\sigma_x = 0$, $\sigma_z = 0$ and $\tau_{xz} = -118.6$ psi for point A. Applying Eq. 9-5

$$\sigma_{1,2} = \frac{\sigma_x + \sigma_z}{2} \pm \sqrt{\left(\frac{\sigma_x - \sigma_z}{2}\right)^2 + \tau_{xz}^2}$$

$$= 0 \pm \sqrt{0 + (-118.6)^2}$$

$$\sigma_1 = 119 \text{ psi} \qquad \sigma_2 = -119 \text{ psi} \qquad \textbf{Ans.}$$

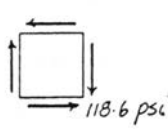

Ans:
$\sigma_1 = 119$ psi, $\sigma_2 = -119$ psi

***9–92.** Solve Prob. 9–91 for point B, which is located on the surface of the pipe.

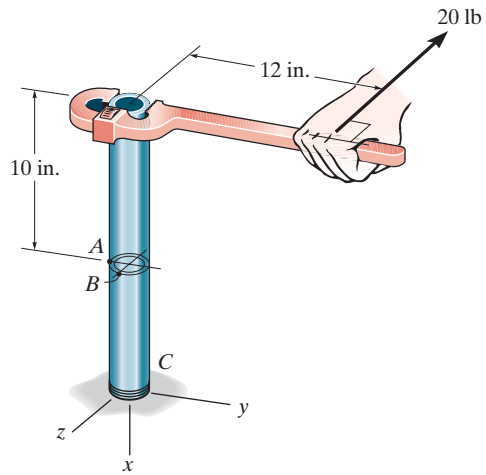

Internal Forces, Torque and Moment: As shown on FBD.

Section Properties:

$$I = \frac{\pi}{4}\left(1.5^4 - 1.375^4\right) = 1.1687 \text{ in}^4$$

$$J = \frac{\pi}{2}\left(1.5^4 - 1.375^4\right) = 2.3374 \text{ in}^4$$

$$(Q_B)_z = 0$$

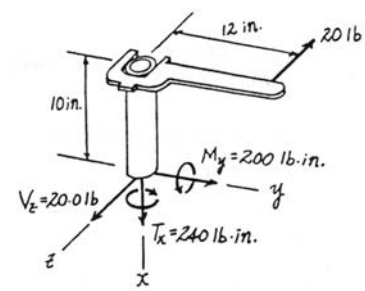

Normal Stress: Applying the flexure formula $\sigma = \dfrac{M_y z}{I_v}$,

$$\sigma_B = \frac{200(1.5)}{1.1687} = 256.7 \text{ psi}$$

Shear Stress: Torsional shear stress can be obtained using torsion formula, $\tau_{\text{twist}} = \dfrac{T\rho}{J}$.

$$\tau_B = \tau_{\text{twist}} = \frac{240(1.5)}{2.3374} = 154.0 \text{ psi}$$

In - Plane Prinicipal Stress: $\sigma_x = 256.7$ psi, $\sigma_y = 0$, and $\tau_{xy} = -154.0$ psi for point B. Applying Eq. 9-5

$$\sigma_{1,2} = \frac{\sigma_x + \sigma_y}{2} \pm \sqrt{\left(\frac{\sigma_x - \sigma_y}{2}\right)^2 + \tau_{xy}^2}$$

$$= \frac{256.7 + 0}{2} \pm \sqrt{\left(\frac{256.7 - 0}{2}\right)^2 + (-154.0)^2}$$

$$= 128.35 \pm 200.49$$

$$\sigma_1 = 329 \text{ psi} \qquad \sigma_2 = -72.1 \text{ psi}$$ **Ans.**

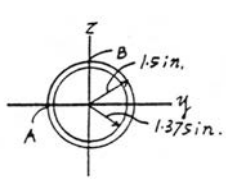

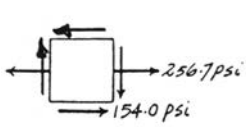

9–93. Determine the equivalent state of stress if an element is oriented 40° clockwise from the element shown. Use Mohr's circle.

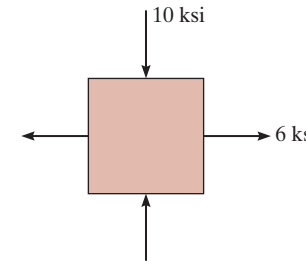

$A(6, 0)$ $B(-10, 0)$ $C(-2, 0)$

$R = CA = CB = 8$

$\sigma_{x'} = -2 + 8\cos 80° = -0.611$ ksi **Ans.**

$\tau_{x'y'} = 8\sin 80° = 7.88$ ksi **Ans.**

$\sigma_{y'} = -2 - 8\cos 80° = -3.39$ ksi **Ans.**

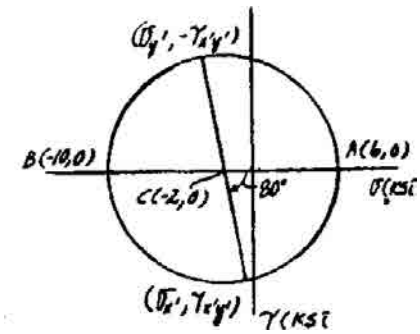

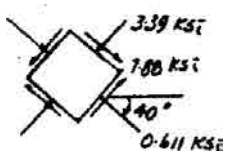

Ans:
$\sigma_{x'} = -0.611$ ksi, $\tau_{x'y'} = 7.88$ ksi, $\sigma_{y'} = -3.39$ ksi

9–94. The crane is used to support the 350-lb load. Determine the principal stresses acting in the boom at points A and B. The cross section is rectangular and has a width of 6 in. and a thickness of 3 in. Use Mohr's circle.

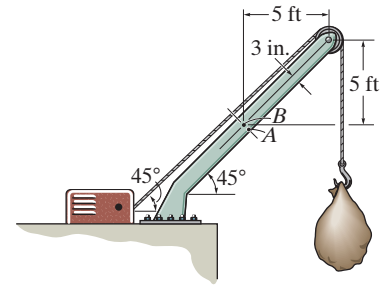

$A = 6(3) = 18 \text{ in}^2 \qquad I = \frac{1}{12}(3)(6^3) = 54 \text{ in}^4$

$Q_B = (1.5)(3)(3) = 13.5 \text{ in}^3$

$Q_A = 0$

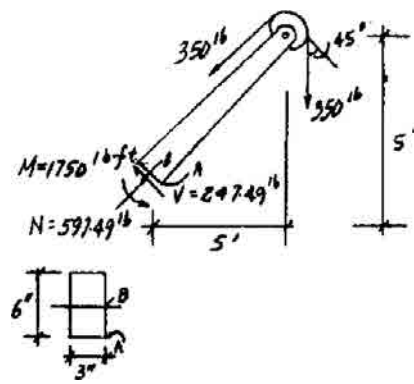

For point A:

$$\sigma_A = -\frac{P}{A} - \frac{My}{I} = \frac{597.49}{18} - \frac{1750(12)(3)}{54} = -1200 \text{ psi}$$

$\tau_A = 0$

$\sigma_1 = 0$ **Ans.**

$\sigma_2 = -1200 \text{ psi} = -1.20 \text{ ksi}$ **Ans.**

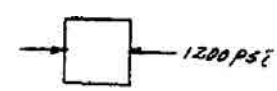

For point B:

$$\sigma_B = -\frac{P}{A} = -\frac{597.49}{18} = -33.19 \text{ psi}$$

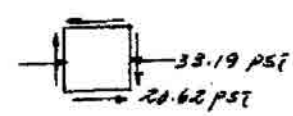

$$\tau_B = \frac{VQ_B}{It} = \frac{247.49(13.5)}{54(3)} = 20.62 \text{ psi}$$

$A(-33.19, -20.62) \qquad B(0, 20.62) \qquad C(-16.60, 0)$

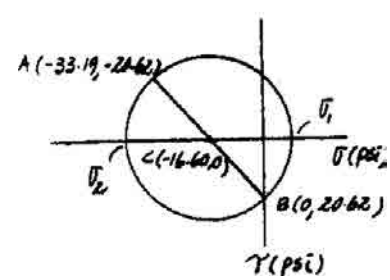

$R = \sqrt{16.60^2 + 20.62^2} = 26.47$

$\sigma_1 = -16.60 + 26.47 = 9.88 \text{ psi}$ **Ans.**

$\sigma_2 = -16.60 - 26.47 = -43.1 \text{ psi}$ **Ans.**

Ans:
Point A: $\sigma_1 = 0$, $\sigma_2 = -1.20$ ksi,
Point B: $\sigma_1 = 9.88$ psi, $\sigma_2 = -43.1$ psi

9–95. Determine the equivalent state of stress on an element at the same point which represents (a) the principal stresses, and (b) the maximum in-plane shear stress and the associated average normal stress. Also, for each case, determine the corresponding orientation of the element with respect to the element shown and sketch the results on the element.

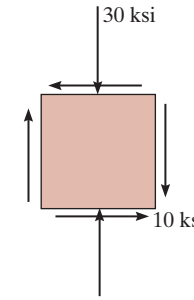

Normal and Shear Stress:

$$\sigma_x = 0 \qquad \sigma_y = -30 \text{ ksi} \qquad \tau_{xy} = -10 \text{ ksi}$$

In-Plane Principal Stresses:

$$\sigma_{1,2} = \frac{\sigma_x + \sigma_y}{2} \pm \sqrt{\left(\frac{\sigma_x - \sigma_y}{2}\right)^2 + \tau_{xy}^2}$$

$$= \frac{0 + (-30)}{2} \pm \sqrt{\left(\frac{0 - (-30)^2}{2}\right) + (-10)^2}$$

$$= -15 \pm \sqrt{325}$$

$$\sigma_1 = 3.03 \text{ ksi} \qquad \sigma_2 = -33.0 \text{ ksi}$$ **Ans.**

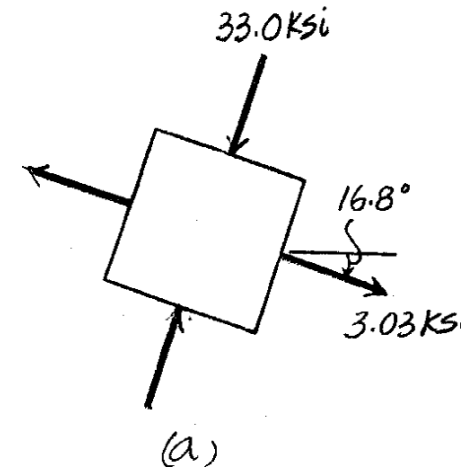

Orientation of Principal Plane:

$$\tan 2\theta_p = \frac{\tau_{xy}}{(\sigma_x - \sigma_y)/2} = \frac{-10}{[0 - (-30)]/2} = -0.6667$$

$$\theta_p = -16.845° \text{ and } 73.15°$$

Substituting $\theta = -16.845°$ into

$$\sigma_{x'} = \frac{\sigma_x + \sigma_y}{2} + \frac{\sigma_x - \sigma_y}{2} \cos 2\theta + \tau_{xy} \sin 2\theta$$

$$= \frac{0 + (-30)}{2} + \frac{0 - (-30)}{2} \cos(-33.69°) - 10 \sin(-33.69°)$$

$$= 3.03 \text{ ksi} = \sigma_1$$

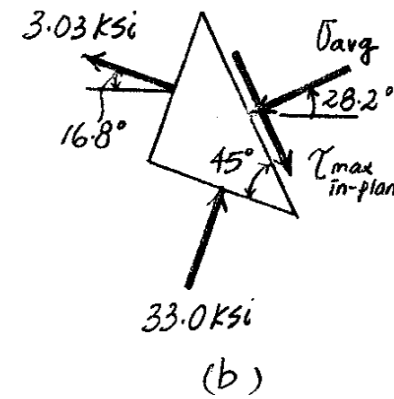

Thus,

$$(\theta_p)_1 = -16.8° \text{ and } (\theta_p)_2 = 73.2°$$ **Ans.**

The element that represents the state of principal stress is shown in Fig. *a*.

Maximum In-Plane Shear Stress:

$$\tau_{\substack{\max \\ \text{in-plane}}} = \sqrt{\left(\frac{\sigma_x - \sigma_y}{2}\right)^2 + \tau_{xy}^2} = \sqrt{\left(\frac{0 - (-30)}{2}\right)^2 + (-10)^2} = 18.0 \text{ ksi}$$ **Ans.**

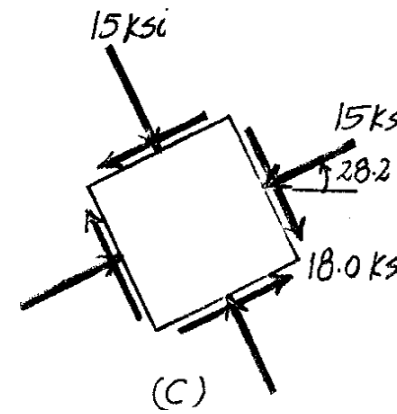

9–95. Continued

Orientation of the Plane of Maximum In-Plane Shear Stress:

$$\tan 2\theta_s = -\frac{(\sigma_x - \sigma_y)/2}{\tau_{xy}} = \frac{[0 - (-30)]/2}{-10} = 1.5$$

$$\theta_s = 28.2^\circ \text{ and } 118^\circ$$

By inspection, $\tau_{\substack{\max \\ \text{in-plane}}}$ has to act in the same sense shown in Fig. *b* to maintain equilibrium.

Average Normal Stress:

$$\sigma_{\text{avg}} = \frac{\sigma_x + \sigma_y}{2} = \frac{0 + (-30)}{2} = -15 \text{ ksi} \qquad \textbf{Ans.}$$

The element that represents the state of maximum in-plane shear stress is shown in Fig. *c*.

Ans:
$\sigma_1 = 3.03$ ksi, $\sigma_2 = -33.0$ ksi,
$\theta_{p1} = -16.8^\circ$ and $\theta_{p2} = 73.2^\circ$,
$\tau_{\substack{\max \\ \text{in-plane}}} = 18.0$ ksi, $\sigma_{\text{avg}} = -15$ ksi, $\theta_s = 28.2^\circ$

***9–96.** The propeller shaft of the tugboat is subjected to the compressive force and torque shown. If the shaft has an inner diameter of 100 mm and an outer diameter of 150 mm, determine the principal stress at a point A located on the outer surface.

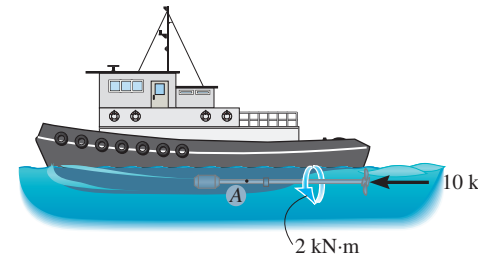

Internal Loadings: Considering the equilibrium of the free-body diagram of the propeller shaft's right segment, Fig. *a*,

$$\Sigma F_x = 0; \quad 10 - N = 0 \qquad\qquad N = 10\text{ kN}$$

$$\Sigma M_x = 0; \quad T - 2 = 0 \qquad\qquad T = 2\text{ kN}\cdot\text{m}$$

Section Properties: The cross - sectional area and the polar moment of inertia of the propeller shaft's cross section are

$$A = \pi\left(0.075^2 - 0.05^2\right) = 3.125\pi\left(10^{-3}\right)\text{ m}^2$$

$$J = \frac{\pi}{2}\left(0.075^4 - 0.05^4\right) = 12.6953125\pi\left(10^{-6}\right)\text{ m}^4$$

Normal and Shear Stress: The normal stress is a contributed by axial stress only.

$$\sigma_A = \frac{N}{A} = -\frac{10\left(10^3\right)}{3.125\pi\left(10^{-3}\right)} = -1.019\text{ MPa}$$

The shear stress is contributed by the torsional shear stress only.

$$\tau_A = \frac{Tc}{J} = \frac{2\left(10^3\right)(0.075)}{12.6953125\pi\left(10^{-6}\right)} = 3.761\text{ MPa}$$

The state of stress at point A is represented by the element shown in Fig. *b*.

Construction of the Circle: $\sigma_x = -1.019$ MPa, $\sigma_y = 0$, and $\tau_{xy} = -3.761$ MPa. Thus,

$$\sigma_{\text{avg}} = \frac{\sigma_x + \sigma_y}{2} = \frac{-1.019 + 0}{2} = -0.5093\text{ MPa}$$

The coordinates of reference point A and the center C of the circle are

$$A(-1.019, -3.761) \qquad\qquad C(-0.5093, 0)$$

Thus, the radius of the circle is

$$R = CA = \sqrt{[-1.019 - (-0.5093)]^2 + (-3.761)^2} = 3.795\text{ MPa}$$

Using these results, the circle is shown in Fig. *c*.

In-Plane Principal Stress: The coordinates of reference points B and D represent σ_1 and σ_2, respectively.

$$\sigma_1 = -0.5093 + 3.795 = 3.29\text{ MPa} \qquad \textbf{Ans.}$$

$$\sigma_2 = -0.5093 - 3.795 = -4.30\text{ MPa} \qquad \textbf{Ans.}$$

9–96. Continued

Orientation of the Principal Plane: Referring to the geometry of the circle, Fig. *c*,

$$\tan 2(\theta_p)_2 = \frac{3.761}{1.019 - 0.5093} = 7.3846$$

$$(\theta_p)_2 = 41.1^\circ \text{ (clockwise)} \qquad \textbf{Ans.}$$

The state of principal stresses is represented on the element shown in Fig. *d*.

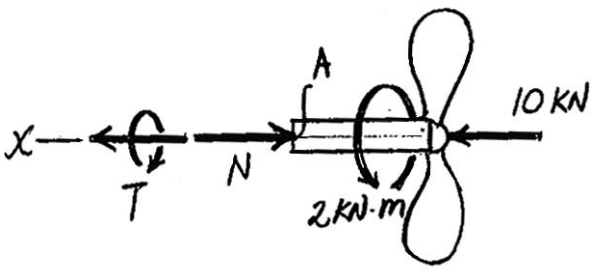

(a)

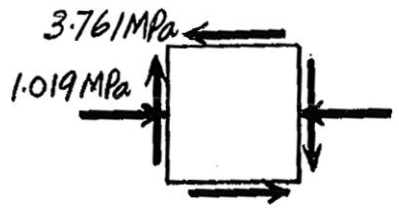

(b)

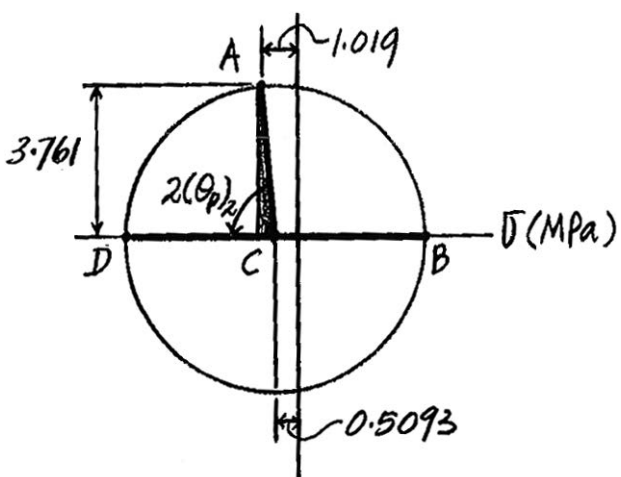

(C)

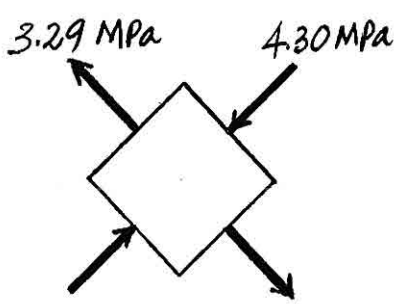

(d)

***9–97.** The box beam is subjected to the loading shown. Determine the principal stress in the beam at points A and B.

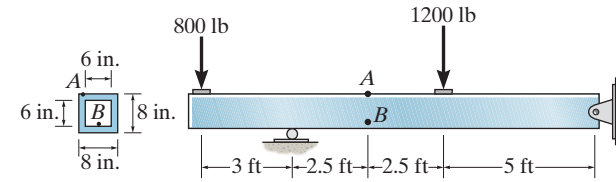

Support Reactions: As shown on FBD(a).

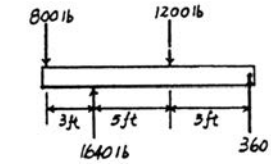

Internal Forces and Moment: As shown on FBD(b).

Section Properties:

$$I = \frac{1}{12}(8)\left(8^3\right) - \frac{1}{12}(6)\left(6^3\right) = 233.33 \text{ in}^4$$

$$Q_A = Q_B = 0$$

Normal Stress: Applying the flexure formula.

$$\sigma = -\frac{M_y}{I}$$

$$\sigma_A = -\frac{-300(12)(4)}{233.33} = 61.71 \text{ psi}$$

$$\sigma_B = -\frac{-300(12)(-3)}{233.33} = -46.29 \text{ psi}$$

Shear Stress: Since $Q_A = Q_B = 0$, then $\tau_A = \tau_B = 0$.

In-Plane Principal Stress: $\sigma_x = 61.71$ psi, $\sigma_y = 0$, and $\tau_{xy} = 0$ for point A. Since no shear stress acts on the element,

$$\sigma_1 = \sigma_x = 61.7 \text{ psi} \qquad \textbf{Ans.}$$

$$\sigma_2 = \sigma_y = 0 \qquad \textbf{Ans.}$$

$\sigma_x = -46.29$ psi, $\sigma_y = 0$, and $\tau_{xy} = 0$ for point B. Since no shear stress acts on the element,

$$\sigma_1 = \sigma_y = 0 \qquad \textbf{Ans.}$$

$$\sigma_2 = \sigma_x = -46.3 \text{ psi} \qquad \textbf{Ans.}$$

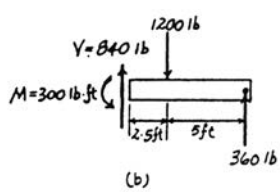

(b)

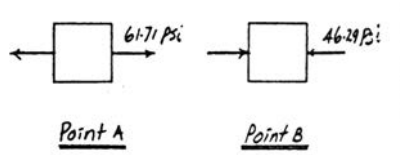

Ans:
Point A: $\sigma_1 = 61.7$ psi, $\sigma_2 = 0$
Point B: $\sigma_1 = 0$, $\sigma_2 = -46.3$ psi

9–98. The state of stress at a point is shown on the element. Determine (a) the principal stresses and (b) the maximum in-plane shear stress and average normal stress at the point. Specify the orientation of the element in each case.

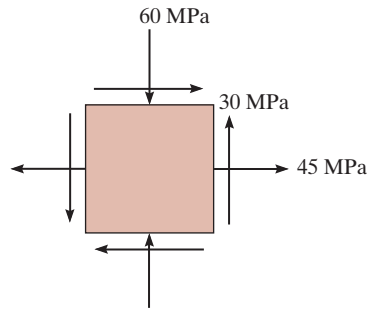

a) $\sigma_x = 45$ MPa $\quad \sigma_y = -60$ MPa $\quad \tau_{xy} = 30$ MPa

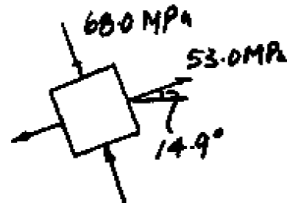

$$\sigma_{1,2} = \frac{\sigma_x + \sigma_y}{2} \pm \sqrt{\left(\frac{\sigma_x - \sigma_y}{2}\right)^2 + \tau_{xy}^2}$$

$$= \frac{45 - 60}{2} \pm \sqrt{\left(\frac{45 - (-60)}{2}\right)^2 + 30^2}$$

$\sigma_1 = 53.0$ MPa $\qquad \sigma_2 = -68.0$ MPa **Ans.**

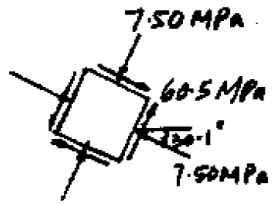

$$\tan 2\theta_p = \frac{\tau_{xy}}{\frac{\sigma_x - \sigma_y}{2}} = \frac{30}{\frac{45 - (-60)}{2}} = 0.5714$$

$\theta_p = 14.87°$ and $-75.13°$

Use Eq. 9–1 to determine the principal plane of σ_1 and σ_2

$$\sigma_{x'} = \frac{\sigma_x + \sigma_y}{2} + \frac{\sigma_x - \sigma_y}{2}\cos 2\theta + \tau_{xy}\sin 2\theta$$

$\theta = \theta_y = 14.87°$

$$\sigma_{x'} = \frac{45 + (-60)}{2} + \frac{45 - (-60)}{2}\cos 29.74° + 30\sin 29.74° = 53.0 \text{ MPa}$$

Therefore, $\theta_{p1} = 14.9°$; $\qquad \theta_{p2} = -75.1°$ **Ans.**

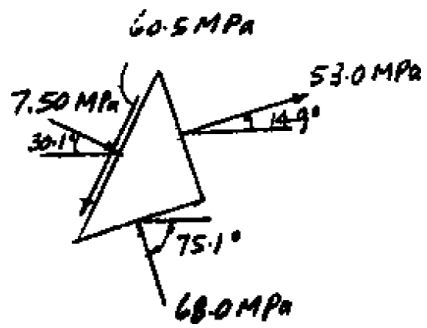

b) $\tau_{\substack{\max \\ \text{in-plane}}} = \sqrt{\left(\frac{\sigma_x - \sigma_y}{2}\right)^2 + \tau_{xy}^2} = \sqrt{\left(\frac{45 - (-60)}{2}\right)^2 + 30^2} = 60.5$ MPa **Ans.**

$$\sigma_{\text{avg}} = \frac{\sigma_x + \sigma_y}{2} = \frac{45 + (-60)}{2} = -7.50 \text{ MPa}$$ **Ans.**

$$\tan 2\theta_s = -\frac{\frac{(\sigma_x - \sigma_y)}{2}}{\tau_{xy}} = -\frac{\frac{[45 - (-60)]}{2}}{30} = -1.75$$

$\theta_s = -30.1°$ **Ans.** and $59.9°$ **Ans.**

By observation, in order to preserve equilibrium, $\tau_{\max} = 60.5$ MPa has to act in the direction shown in the figure.

Ans:
$\sigma_1 = 53.0$ MPa, $\sigma_2 = -68.0$ MPa,
$\theta_{p1} = 14.9°$, $\theta_{p2} = -75.1°$, $\tau_{\substack{\max \\ \text{in-plane}}} = 60.5$ MPa,
$\sigma_{\text{avg}} = -7.50$ MPa, $\theta_s = -30.1°$ and $59.9°$

9–99. The state of stress at a point in a member is shown on the element. Determine the stress components acting on the inclined plane AB. Solve the problem using the method of equilibrium described in Sec. 9.1.

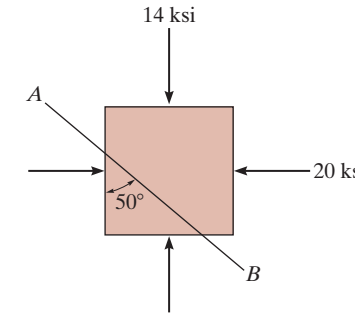

$^{+}\nearrow \Sigma F_{x'} = 0;$ $\quad \sigma_{x'}\Delta A + 14\,\Delta A \sin 50° \cos 40° + 20\,\Delta A \cos 50° \cos 50° = 0$

$\sigma_{x'} = -16.5$ ksi **Ans.**

$\nwarrow^{+} \Sigma F_{y'} = 0;$ $\quad \tau_{x'y'}\,\Delta A + 14\,\Delta A \sin 50° \sin 40° - 20\,\Delta A \cos 50° \sin 50° = 0$

$\tau_{x'y'} = 2.95$ ksi **Ans.**

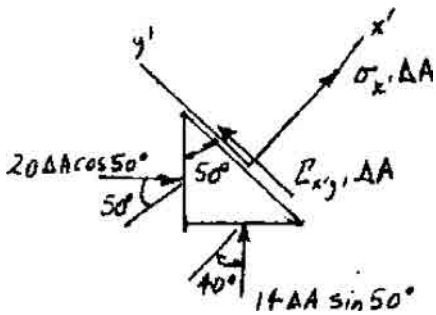

Ans:
$\sigma_{x'} = -16.5$ ksi, $\tau_{x'y'} = 2.95$ ksi

10–1. Prove that the sum of the normal strains in perpendicular directions is constant.

$$\epsilon_{x'} = \frac{\epsilon_x + \epsilon_y}{2} + \frac{\epsilon_x - \epsilon_y}{2} \cos 2\theta + \frac{\gamma_{xy}}{2} \sin 2\theta \qquad \textbf{(1)}$$

$$\epsilon_{y'} = \frac{\epsilon_x + \epsilon_y}{2} - \frac{\epsilon_x - \epsilon_y}{2} \cos 2\theta - \frac{\gamma_{xy}}{2} \sin 2\theta \qquad \textbf{(2)}$$

Adding Eq. (1) and Eq. (2) yields:

$$\epsilon_{x'} + \epsilon_{y'} = \epsilon_x + \epsilon_y = \text{constant} \qquad \textbf{\textit{(Q.E.D.)}}$$

10–2. The state of strain at the point has components of $\epsilon_x = 200(10^{-6})$, $\epsilon_y = -300(10^{-6})$, and $\gamma_{xy} = 400(10^{-6})$. Use the strain-transformation equations to determine the equivalent in-plane strains on an element oriented at an angle of 30° counterclockwise from the original position. Sketch the deformed element due to these strains within the x–y plane.

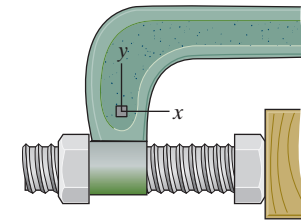

In accordance with the established sign convention,

$$\epsilon_x = 200(10^{-6}), \qquad \epsilon_y = -300(10^{-6}) \qquad \gamma_{xy} = 400(10^{-6}) \qquad \theta = 30°$$

$$\epsilon_{x'} = \frac{\epsilon_x + \epsilon_y}{2} + \frac{\epsilon_x - \epsilon_y}{2}\cos 2\theta + \frac{\gamma_{xy}}{2}\sin 2\theta$$

$$= \left[\frac{200 + (-300)}{2} + \frac{200 - (-300)}{2}\cos 60° + \frac{400}{2}\sin 60°\right](10^{-6})$$

$$= 248\,(10^{-6})$$ **Ans.**

$$\frac{\gamma_{x'y'}}{2} = -\left(\frac{\epsilon_x - \epsilon_y}{2}\right)\sin 2\theta + \frac{\gamma_{xy}}{2}\cos 2\theta$$

$$\gamma_{x'y'} = \left\{-\left[200 - (-300)\right]\sin 60° + 400\cos 60°\right\}(10^{-6})$$

$$= -233(10^{-6})$$ **Ans.**

$$\epsilon_{y'} = \frac{\epsilon_x + \epsilon_y}{2} - \frac{\epsilon_x - \epsilon_y}{2}\cos 2\theta - \frac{\gamma_{xy}}{2}\sin 2\theta$$

$$= \left[\frac{200 + (-300)}{2} - \frac{200 - (-300)}{2}\cos 60° - \frac{400}{2}\sin 60°\right](10^{-6})$$

$$= -348(10^{-6})$$ **Ans.**

The deformed element of this equivalent state of strain is shown in Fig. *a*

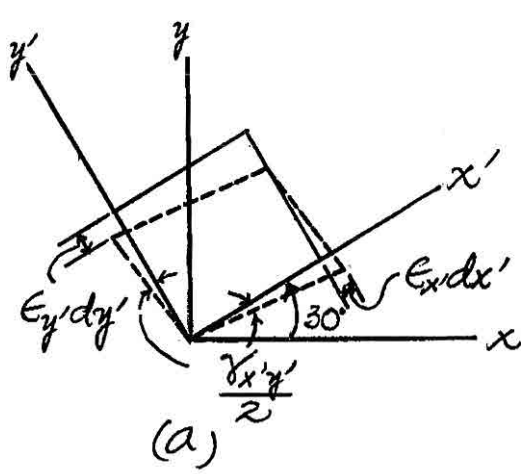

(a)

Ans:
$\epsilon_{x'} = 248(10^{-6})$, $\gamma_{x'y'} = -233(10^{-6})$,
$\epsilon_{y'} = -348(10^{-6})$

10–3. The state of strain at a point on a wrench has components $\epsilon_x = 120(10^{-6})$, $\epsilon_y = -180(10^{-6})$, $\gamma_{xy} = 150(10^{-6})$. Use the strain-transformation equations to determine (a) the in-plane principal strains and (b) the maximum in-plane shear strain and average normal strain. In each case specify the orientation of the element and show how the strains deform the element within x–y plane.

$\epsilon_x = 120(10^{-6})$ $\qquad \epsilon_y = -180(10^{-6})$ $\qquad \gamma_{xy} = 150(10^{-6})$

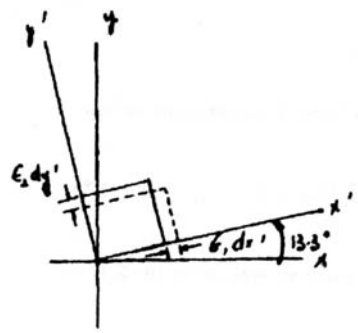

a) $$\epsilon_{1,2} = \frac{\epsilon_x + \epsilon_y}{2} \pm \sqrt{\left(\frac{\epsilon_x - \epsilon_y}{2}\right)^2 + \left(\frac{\gamma_{xy}}{2}\right)^2}$$

$$= \left[\frac{120 + (-180)}{2} \pm \sqrt{\left(\frac{120 - (-180)}{2}\right)^2 + \left(\frac{150}{2}\right)^2}\right]10^{-6}$$

$\epsilon_1 = 138(10^{-6})$; $\qquad \epsilon_2 = -198(10^{-6})$ **Ans.**

Orientation of ϵ_1 and ϵ_2

$$\tan 2\theta_p = \frac{\gamma_{xy}}{\epsilon_x - \epsilon_y} = \frac{150}{[120 - (-180)]} = 0.5$$

$\theta_p = 13.28°$ and $-76.72°$

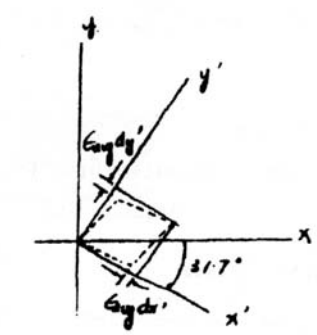

Use Eq. 10–5 to determine the direction of ϵ_1 and ϵ_2

$$\epsilon_{y'} = \frac{\epsilon_x + \epsilon_y}{2} + \frac{\epsilon_x - \epsilon_y}{2}\cos 2\theta + \frac{\gamma_{xy}}{2}\sin 2\theta$$

$\theta = \theta_p = 13.28°$

$$\epsilon_{y'} = \left[\frac{120 + (-180)}{2} + \frac{120 - (-180)}{2}\cos(26.56°) + \frac{150}{2}\sin 26.56°\right]10^{-6}$$

$= 138(10^{-6}) = \epsilon_1$

Therefore $\theta_{p1} = 13.3°$; $\qquad \theta_{p2} = -76.7°$ **Ans.**

b) $$\frac{\gamma_{\substack{\max \\ \text{in-plane}}}}{2} = \sqrt{\left(\frac{\epsilon_x - \epsilon_y}{2}\right)^2 + \left(\frac{\gamma_{xy}}{2}\right)^2}$$

$$\gamma_{\substack{\max \\ \text{in-plane}}} = 2\left[\sqrt{\left(\frac{120 - (-180)}{2}\right)^2 + \left(\frac{150}{2}\right)^2}\right]10^{-6} = 335(10^{-6})$$ **Ans.**

$$\epsilon_{\text{avg}} = \frac{\epsilon_x + \epsilon_y}{2} = \left[\frac{120 + (-180)}{2}\right]10^{-6} = -30.0(10^{-6})$$ **Ans.**

10–3. Continued

Orientation of γ_{max}

$$\tan 2\theta_s = \frac{-(\epsilon_x - \epsilon_y)}{\gamma_{xy}} = \frac{-[120 - (-180)]}{150} = -2.0$$

$$\theta_s = -31.7^\circ \quad \text{and} \quad 58.3^\circ$$ **Ans.**

Use Eq. 10–11 to determine the sign of $\gamma_{\substack{max \\ in\text{-}plane}}$

$$\frac{\gamma_{x'y'}}{2} = -\frac{\epsilon_x - \epsilon_y}{2} \sin 2\theta + \frac{\gamma_{xy}}{2} \cos 2\theta$$

$$\theta = \theta_s = -31.7^\circ$$

$$\gamma_{x'y'} = 2\left[-\frac{120 - (-180)}{2} \sin(-63.4^\circ) + \frac{150}{2} \cos(-63.4^\circ)\right]10^{-6} = 335(10^{-6})$$

Ans:
$\epsilon_1 = 138(10^{-6})$, $\epsilon_2 = -198(10^{-6})$,
$\theta_{p1} = 13.3^\circ$, $\theta_{p2} = -76.7^\circ$,
$\gamma_{\substack{max \\ in\text{-}plane}} = 335(10^{-6})$, $\epsilon_{avg} = -30.0(10^{-6})$
$\theta_s = -31.7^\circ$ and 58.3°

***10–4.** The state of strain at the point on the gear tooth has components $\epsilon_x = 850(10^{-6})$, $\epsilon_y = 480(10^{-6})$, $\gamma_{xy} = 650(10^{-6})$. Use the strain-transformation equations to determine (a) the in-plane principal strains and (b) the maximum in-plane shear strain and average normal strain. In each case specify the orientation of the element and show how the strains deform the element within the x–y plane.

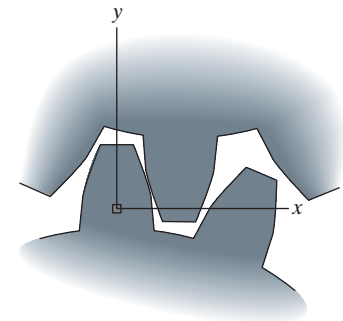

$\epsilon_x = 850(10^{-6})$ $\qquad \epsilon_y = 480(10^{-6})$ $\qquad \gamma_{xy} = 650(10^{-6})$

a) $$\epsilon_{1,2} = \frac{\epsilon_x + \epsilon_y}{2} \pm \sqrt{\left(\frac{\epsilon_x - \epsilon_y}{2}\right)^2 + \left(\frac{\gamma_{xy}}{2}\right)^2}$$

$$= \left[\frac{850 + 480}{2} \pm \sqrt{\left(\frac{850 - 480}{2}\right)^2 + \left(\frac{650}{2}\right)^2}\right](10^{-6})$$

$\epsilon_1 = 1039(10^{-6})$ **Ans.** $\qquad \epsilon_2 = 291(10^{-6})$ **Ans.**

Orientation of ϵ_1 and ϵ_2:

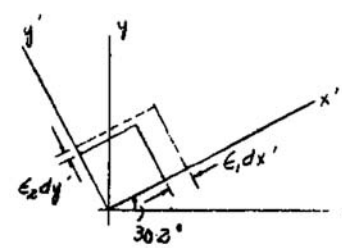

$$\tan 2\theta_y = \frac{\gamma_{xy}}{\epsilon_x - \epsilon_y} = \frac{650}{850 \cdot 480}$$

$$\theta_y = 30.18° \quad \text{and} \quad 120.18°$$

Use Eq. 10–5 to determine the direction of ϵ_1 and ϵ_2:

$$\epsilon_{x'} = \frac{\epsilon_x + \epsilon_y}{2} + \frac{\epsilon_x - \epsilon_y}{2}\cos 2\theta + \frac{\gamma_{xy}}{2}\sin 2\theta$$

$$\theta = \theta_y = 30.18°$$

$$\epsilon_{x'} = \left[\frac{850 + 480}{2} + \frac{850 - 480}{2}\cos(60.35°) + \frac{650}{2}\sin(60.35°)\right](10^{-6})$$

$$= 1039(10^{-6})$$

Therefore, $\theta_{p1} = 30.2°$ **Ans.** $\qquad \theta_{p2} = 120°$ **Ans.**

b)

$$\frac{\gamma_{\substack{\text{max}\\ \text{in-plane}}}}{2} = \sqrt{\left(\frac{\epsilon_x - \epsilon_y}{2}\right)^2 + \left(\frac{\gamma_{xy}}{2}\right)^2}$$

$$\gamma_{\substack{\text{max}\\ \text{in-plane}}} = 2\left[\sqrt{\left(\frac{850 - 480}{2}\right)^2 + \left(\frac{650}{2}\right)^2}\right](10^{-6}) = 748(10^{-6})$$ **Ans.**

$$\epsilon_{\text{avg}} = \frac{\epsilon_x + \epsilon_y}{2} = \left(\frac{850 + 480}{2}\right)(10^{-6}) = 665(10^{-6})$$ **Ans.**

10–4. Continued

Orientation of γ_{max}:

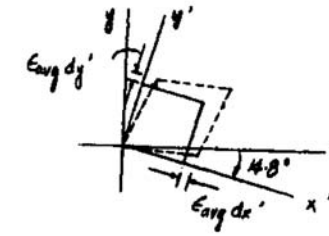

$$\tan 2\theta_t = \frac{-(\epsilon_x - \epsilon_y)}{\gamma_{xy}} = \frac{-(850 - 480)}{650}$$

$$\theta_t = -14.8^\circ \text{ and } 75.2^\circ$$ **Ans.**

Use Eq. 10–6 to determine the sign of $\gamma_{\substack{max \\ in\text{-}plane}}$:

$$\frac{\gamma_{x'y'}}{2} = -\frac{\epsilon_x - \epsilon_y}{2}\sin 2\theta + \frac{\gamma_{xy}}{2}\cos 2\theta; \qquad \theta = \theta_t = -14.8^\circ$$

$$\gamma_{x'y'} = [-(850 - 480)\sin(-29.65^\circ) + 650\cos(-29.65^\circ)](10^{-6}) = 748(10^{-6})$$

10–5. The state of strain at the point on the gear tooth has the components $\epsilon_x = 520(10^{-6})$, $\epsilon_y = -760(10^{-6})$, $\gamma_{xy} = 750(10^{-6})$. Use the strain-transformation equations to determine (a) the in-plane principal strains and (b) the maximum in-plane shear strain and average normal strain. In each case specify the orientation of the element and show how the strains deform the element within the x–y plane.

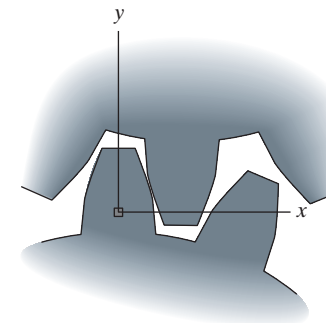

$\epsilon_x = 520(10^{-6})$ $\qquad \epsilon_y = -760(10^{-6})$ $\qquad \gamma_{xy} = -750(10^{-6})$

a) $$\epsilon_{1,2} = \frac{\epsilon_x + \epsilon_y}{2} \pm \sqrt{\left(\frac{\epsilon_x - \epsilon_y}{2}\right)^2 + \left(\frac{\gamma_{xy}}{2}\right)^2}$$

$$= \left[\frac{520 + (-760)}{2} \pm \sqrt{\left(\frac{520 - (-760)}{2}\right)^2 + \left(\frac{-750}{2}\right)^2}\right]10^{-6}$$

$\epsilon_1 = 622(10^{-6})$; $\qquad \epsilon_2 = -862(10^{-6})$ **Ans.**

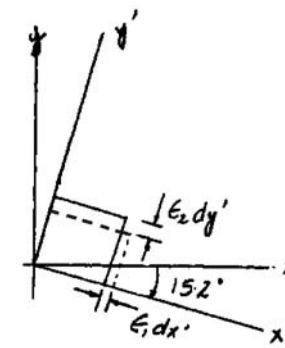

Orientation of ϵ_1 and ϵ_2

$$\tan 2\theta_p = \frac{\gamma_{xy}}{\epsilon_x - \epsilon_y} = \frac{-750}{[520 - (-760)]} = -0.5859;\ \theta_p = -15.18^\circ \text{ and } \theta_p = 74.82^\circ$$

Use Eq. 10–5 to determine the direction of ϵ_1 and ϵ_2.

$$\epsilon_{x'} = \frac{\epsilon_x + \epsilon_y}{2} + \frac{\epsilon_x - \epsilon_y}{2}\cos 2\theta + \frac{\gamma_{xy}}{2}\sin 2\theta$$

$\theta = \theta_p = -15.18^\circ$

$$\epsilon_{x'} = \left[\frac{520 + (-760)}{2} + \frac{520 - (-760)}{2}\cos(-30.36^\circ) + \frac{-750}{2}\sin(-30.36^\circ)\right]10^{-6}$$

$$= 622(10^{-6}) = \epsilon_1$$

Therefore, $\theta_{p1} = -15.2^\circ$ and $\theta_{p2} = 74.8^\circ$ **Ans.**

b) $$\frac{\gamma_{\substack{\max\\ \text{in-plane}}}}{2} = \sqrt{\left(\frac{\epsilon_x - \epsilon_y}{2}\right)^2 + \left(\frac{\gamma_{xy}}{2}\right)^2}$$

$$\gamma_{\substack{\max\\ \text{in-plane}}} = 2\left[\sqrt{\left(\frac{520 - (-760)}{2}\right)^2 + \left(\frac{-750}{2}\right)^2}\right]10^{-6} = -1484(10^{-6})$$ **Ans.**

$$\epsilon_{avg} = \frac{\epsilon_x + \epsilon_y}{2} = \left[\frac{520 + (-760)}{2}\right]10^{-6} = -120(10^{-6})$$ **Ans.**

10–5. Continued

Orientation of $\gamma_{\substack{\max \\ \text{in-plane}}}$:

$$\tan 2\theta_s = \frac{-(\epsilon_x - \epsilon_y)}{\gamma_{xy}} = \frac{-[520 - (-760)]}{-750} = 1.7067$$

$\theta_s = 29.8°$ and $\theta_s = -60.2°$ **Ans.**

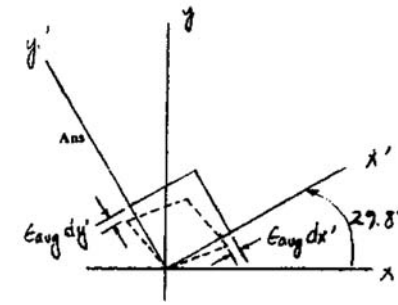

Use Eq. 10–6 to check the sign of $\gamma_{\substack{\max \\ \text{in-plane}}}$:

$$\frac{\gamma_{x'y'}}{2} = -\frac{\epsilon_x - \epsilon_y}{2}\sin 2\theta + \frac{\gamma_{xy}}{2}\cos 2\theta; \qquad \theta = \theta_s = 29.8°$$

$$\gamma_{x'y'} = 2\left[-\frac{520 - (-760)}{2}\sin(59.6°) + \frac{-750}{2}\cos(59.6°)\right]10^{-6} = -1484\,(10^{-6})$$

Ans:
$\epsilon_1 = 622(10^{-6})$, $\epsilon_2 = -862(10^{-6})$,
$\theta_{p1} = -15.2°$ and $\theta_{p2} = 74.8°$,
$\gamma_{\substack{\max \\ \text{in-plane}}} = -1484(10^{-6})$, $\epsilon_{avg} = -120(10^{-6})$,
$\theta_s = 29.8°$ and $-60.2°$

10–6. A differential element on the bracket is subjected to plane strain that has the following components: $\epsilon_x = 150(10^{-6})$, $\epsilon_y = 200(10^{-6})$, $\gamma_{xy} = -700(10^{-6})$. Use the strain-transformation equations and determine the equivalent in plane strains on an element oriented at an angle of $\theta = 60°$ counterclockwise from the original position. Sketch the deformed element within the x–y plane due to these strains.

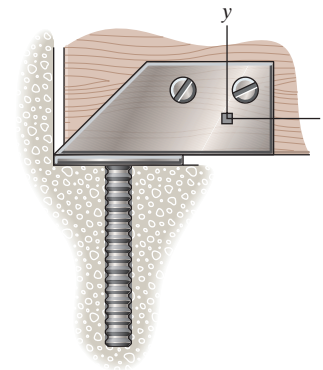

$$\epsilon_x = 150(10^{-6}) \qquad \epsilon_y = 200(10^{-6}) \qquad \gamma_{xy} = -700(10^{-6}) \qquad \theta = 60°$$

$$\epsilon_{x'} = \frac{\epsilon_x + \epsilon_y}{2} + \frac{\epsilon_x - \epsilon_y}{2}\cos 2\theta + \frac{\gamma_{xy}}{2}\sin 2\theta$$

$$= \left[\frac{150 + 200}{2} + \frac{150 - 200}{2}\cos 120° + \left(\frac{-700}{2}\right)\sin 120°\right]10^{-6}$$

$$= -116(10^{-6}) \qquad \textbf{Ans.}$$

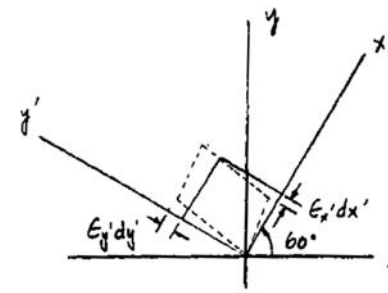

$$\epsilon_{y'} = \frac{\epsilon_x + \epsilon_y}{2} - \frac{\epsilon_x - \epsilon_y}{2}\cos 2\theta - \frac{\gamma_{xy}}{2}\sin 2\theta$$

$$= \left[\frac{150 + 200}{2} - \frac{150 - 200}{2}\cos 120° - \left(\frac{-700}{2}\right)\sin 120°\right]10^{-6}$$

$$= 466(10^{-6}) \qquad \textbf{Ans.}$$

$$\frac{\gamma_{x'y'}}{2} = -\frac{\epsilon_x - \epsilon_y}{2}\sin 2\theta + \frac{\gamma_{xy}}{2}\cos 2\theta$$

$$\gamma_{x'y'} = 2\left[-\frac{150 - 200}{2}\sin 120° + \left(\frac{-700}{2}\right)\cos 120°\right]10^{-6} = 393(10^{-6}) \qquad \textbf{Ans.}$$

Ans:
$\epsilon_{x'} = -116(10^{-6})$, $\epsilon_{y'} = 466(10^{-6})$,
$\gamma_{x'y'} = 393(10^{-6})$

10–7. Solve Prob. 10–6 for an element oriented $\theta = 30°$ clockwise.

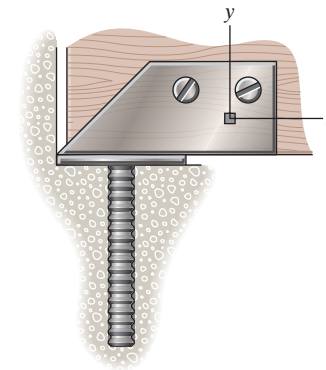

$$\epsilon_x = 150(10^{-6}) \qquad \epsilon_y = 200(10^{-6}) \qquad \gamma_{xy} = -700(10^{-6}) \qquad \theta = -30°$$

$$\epsilon_{x'} = \frac{\epsilon_x + \epsilon_y}{2} + \frac{\epsilon_x - \epsilon_y}{2}\cos 2\theta + \frac{\gamma_{xy}}{2}\sin 2\theta$$

$$= \left[\frac{150 + 200}{2} + \frac{150 - 200}{2}\cos(-60°) + \left(\frac{-700}{2}\right)\sin(-60°)\right]10^{-6}$$

$$= 466(10^{-6}) \qquad \textbf{Ans.}$$

$$\epsilon_{y'} = \frac{\epsilon_x + \epsilon_y}{2} - \frac{\epsilon_x - \epsilon_y}{2}\cos 2\theta - \frac{\gamma_{xy}}{2}\sin 2\theta$$

$$= \left[\frac{150 + 200}{2} - \frac{150 - 200}{2}\cos(-60°) - \left(\frac{-700}{2}\right)\sin(-60°)\right]10^{-6}$$

$$= -116(10^{-6}) \qquad \textbf{Ans.}$$

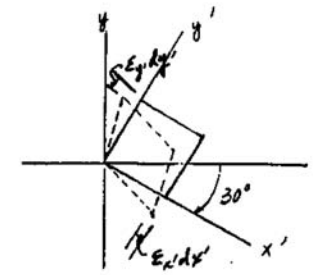

$$\frac{\gamma_{x'y'}}{2} = -\frac{\epsilon_x - \epsilon_y}{2}\sin 2\theta + \frac{\gamma_{xy}}{2}\cos 2\theta$$

$$\gamma_{x'y'} = 2\left[-\frac{150 - 200}{2}\sin(-60°) + \frac{-700}{2}\cos(-60°)\right]10^{-6}$$

$$= -393(10^{-6}) \qquad \textbf{Ans.}$$

Ans:
$\epsilon_{x'} = 466(10^{-6})$, $\epsilon_{y'} = -116(10^{-6})$,
$\gamma_{x'y'} = -393(10^{-6})$

***10–8.** The state of strain at the point on the bracket has components $\epsilon_x = -200(10^{-6})$, $\epsilon_y = -650(10^{-6})$, $\gamma_{xy} = -175(10^{-6})$. Use the strain-transformation equations to determine the equivalent in-plane strains on an element oriented at an angle of $\theta = 20°$ counterclockwise from the original position. Sketch the deformed element due to these strains within the x–y plane.

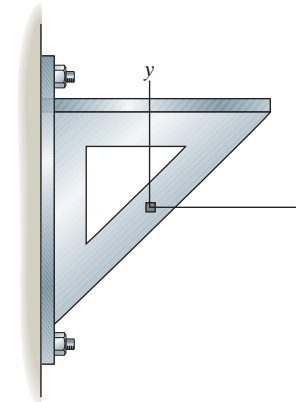

$$\epsilon_x = -200(10^{-6}) \qquad \epsilon_y = -650(10^{-6}) \qquad \gamma_{xy} = -175(10^{-6}) \qquad \theta = 20°$$

$$\epsilon_{x'} = \frac{\epsilon_x + \epsilon_y}{2} + \frac{\epsilon_x - \epsilon_y}{2}\cos 2\theta + \frac{\gamma_{xy}}{2}\sin 2\theta$$

$$= \left[\frac{-200 + (-650)}{2} + \frac{(-200) - (-650)}{2}\cos(40°) + \frac{(-175)}{2}\sin(40°)\right](10^{-6})$$

$$= -309(10^{-6}) \qquad \textbf{Ans.}$$

$$\epsilon_{y'} = \frac{\epsilon_x + \epsilon_y}{2} - \frac{\epsilon_x - \epsilon_y}{2}\cos 2\theta - \frac{\gamma_{xy}}{2}\sin 2\theta$$

$$= \left[\frac{-200 + (-650)}{2} - \frac{-200 - (-650)}{2}\cos(40°) - \frac{(-175)}{2}\sin(40°)\right](10^{-6})$$

$$= -541(10^{-6}) \qquad \textbf{Ans.}$$

$$\frac{\gamma_{x'y'}}{2} = -\frac{\epsilon_x - \epsilon_y}{2}\sin 2\theta + \frac{\gamma_{xy}}{2}\cos 2\theta$$

$$\gamma_{x'y'} = [-(-200 - (-650))\sin(40°) + (-175)\cos(40°)](10^{-6})$$

$$= -423(10^{-6}) \qquad \textbf{Ans.}$$

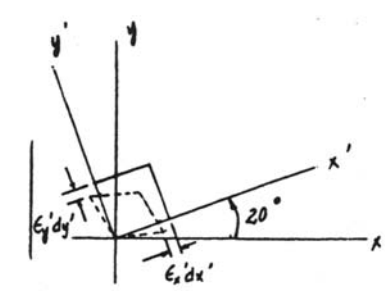

10–9. The state of strain at the point has components of $\epsilon_x = 180(10^{-6})$, $\epsilon_y = -120(10^{-6})$, and $\gamma_{xy} = -100(10^{-6})$. Use the strain-transformation equations to determine (a) the in-plane principal strains and (b) the maximum in-plane shear strain and average normal strain. In each case specify the orientation of the element and show how the strains deform the element within the x–y plane.

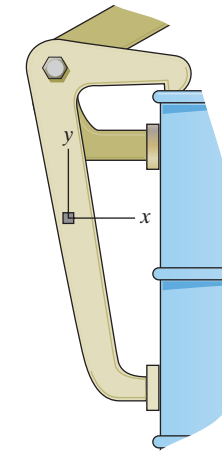

a) In accordance with the established sign convention, $\epsilon_x = 180(10^{-6})$, $\epsilon_y = -120(10^{-6})$ and $\gamma_{xy} = -100(10^{-6})$.

$$\epsilon_{1,2} = \frac{\epsilon_x + \epsilon_y}{2} \pm \sqrt{\left(\frac{\epsilon_x - \epsilon_y}{2}\right)^2 + \left(\frac{\gamma_{xy}}{2}\right)^2}$$

$$= \left\{\frac{180 + (-120)}{2} \pm \sqrt{\left[\frac{180 - (-120)}{2}\right]^2 + \left(\frac{-100}{2}\right)^2}\right\}(10^{-6})$$

$$= \left(30 \pm 158.11\right)(10^{-6})$$

$\epsilon_1 = 188(10^{-6})$ $\quad$ $\epsilon_2 = -128(10^{-6})$ **Ans.**

$$\tan 2\theta_P = \frac{\gamma_{xy}}{\epsilon_x - \epsilon_y} = \frac{-100(10^{-6})}{\left[180 - (-120)\right](10^{-6})} = -0.3333$$

$\theta_P = -9.217°$ $\quad$ and $\quad$ $80.78°$

Substitute $\theta = -9.217°$,

$$\epsilon_{x'} = \frac{\epsilon_x + \epsilon_y}{2} + \frac{\epsilon_x - \epsilon_y}{2}\cos 2\theta + \frac{\gamma_{xy}}{2}\sin 2\theta$$

$$= \left[\frac{180 + (-120)}{2} + \frac{180 - (-120)}{2}\cos(-18.43°) + \frac{-100}{2}\sin(-18.43)\right](10^{-6})$$

$$= 188(10^{-6}) = \epsilon_1$$

Thus,

$(\theta_P)_1 = -9.22°$ $\quad$ $(\theta_P)_2 = 80.8°$ **Ans.**

The deformed element is shown in Fig (a).

b) $$\frac{\gamma_{\substack{\text{max}\\\text{in-plane}}}}{2} = \sqrt{\left(\frac{\epsilon_x - \epsilon_y}{2}\right)^2 + \left(\frac{\gamma_{xy}}{2}\right)^2}$$

$$\gamma_{\substack{\text{max}\\\text{in-plane}}} = \left\{2\sqrt{\left[\frac{180 - (-120)}{2}\right]^2 + \left(\frac{-100}{2}\right)^2}\right\}(10^{-6}) = 316\left(10^{-6}\right)$$ **Ans.**

$$\tan 2\theta_s = -\left(\frac{\epsilon_x - \epsilon_y}{\gamma_{xy}}\right) = -\left\{\frac{\left[180 - (-120)\right](10^{-6})}{-100(10^{-6})}\right\} = 3$$

$\theta_s = 35.78° = 35.8°$ $\quad$ and $\quad$ $-54.22° = -54.2°$ **Ans.**

10–9. Continued

The algebraic sign for $\gamma_{\substack{\max \\ \text{in-plane}}}$ when $\theta = 35.78°$.

$$\frac{\gamma_{x'y'}}{2} = -\left(\frac{\epsilon_x - \epsilon_y}{2}\right)\sin 2\theta + \frac{\gamma_{xy}}{2}\cos 2\theta$$

$$\gamma_{x'y'} = \left\{-\left[180 - (-120)\right]\sin 71.56° + (-100)\cos 71.56°\right\}(10^{-6})$$

$$= -316(10^{-6})$$

$$\epsilon_{\text{avg}} = \frac{\epsilon_x + \epsilon_y}{2} = \left[\frac{180 + (-120)}{2}\right](10^{-6}) = 30(10^{-6}) \qquad \textbf{Ans.}$$

The deformed element for the state of maximum in-plane shear strain is shown in Fig. *b*

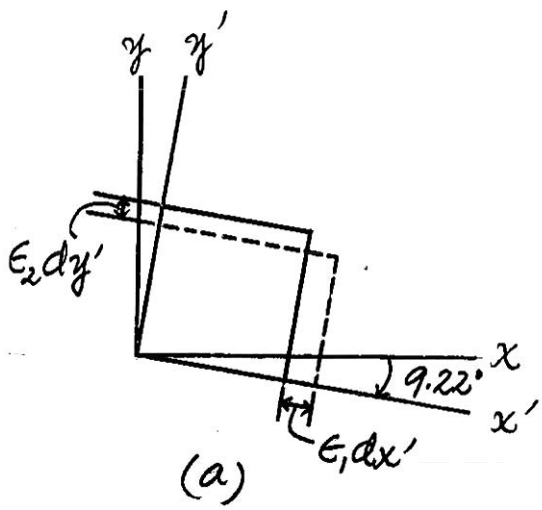

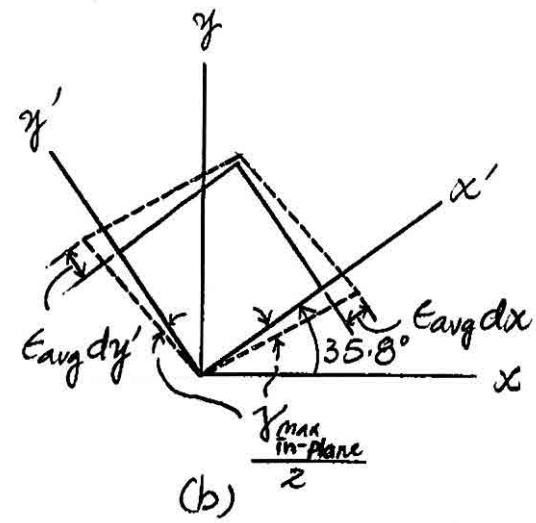

Ans:
$\epsilon_1 = 188(10^{-6})$, $\epsilon_2 = -128(10^{-6})$,
$\theta_{p1} = -9.22°$, $\theta_{p2} = 80.8°$,
$\gamma_{\substack{\max \\ \text{in-plane}}} = 316(10^{-6})$, $\theta_s = 35.8°$ and $-54.2°$,
$\epsilon_{\text{avg}} = 30(10^{-6})$

10–10. The state of strain at the point on the support has components of $\epsilon_x = 350(10^{-6})$, $\epsilon_y = 400(10^{-6})$, $\gamma_{xy} = -675(10^{-6})$. Use the strain-transformation equations to determine (a) the in-plane principal strains and (b) the maximum in-plane shear strain and average normal strain. In each case specify the orientation of the element and show how the strains deform the element within the x–y plane.

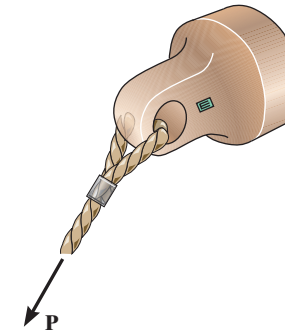

a)

$$\epsilon_{1,2} = \frac{\epsilon_x + \epsilon_y}{2} \pm \sqrt{\left(\frac{\epsilon_x - \epsilon_y}{2}\right)^2 + \left(\frac{\gamma_{xy}}{2}\right)^2}$$

$$= \frac{350 + 400}{2} \pm \sqrt{\left(\frac{350 - 400}{2}\right)^2 + \left(\frac{-675}{2}\right)^2}$$

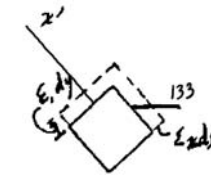

$\epsilon_1 = 713(10^{-6})$ **Ans.** $\epsilon_2 = 36.6(10^{-6})$ **Ans.**

$$\tan 2\theta_p = \frac{\gamma_{xy}}{\epsilon_x - \epsilon_y} = \frac{-675}{(350 - 400)}$$

$\theta_{p1} = 133°$ **Ans.**

b)

$$\frac{(\gamma_{x'y'})_{\max}}{2} = \sqrt{\left(\frac{\epsilon_x - \epsilon_y}{2}\right)^2 + \left(\frac{\gamma_{xy}}{2}\right)^2}$$

$$\frac{(\gamma_{x'y'})_{\max}}{2} = \sqrt{\left(\frac{350 - 400}{2}\right)^2 + \left(\frac{-675}{2}\right)^2}$$

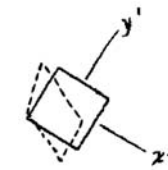

$(\gamma_{x'y'})_{\max} = 677(10^{-6})$ **Ans.**

$$\epsilon_{\text{avg}} = \frac{\epsilon_x + \epsilon_y}{2} = \frac{350 + 400}{2} = 375(10^{-6})$$ **Ans.**

$$\tan 2\theta_s = \frac{-(\epsilon_x - \epsilon_y)}{\gamma_{xy}} = \frac{350 - 400}{675}$$

$\theta_s = -2.12°$ **Ans.**

Ans:
(a) $\epsilon_1 = 713(10^{-6})$, $\epsilon_2 = 36.6(10^{-6})$, $\theta_{p1} = 133°$
(b) $\gamma_{\substack{\max \\ \text{in-plane}}} = 677(10^{-6})$, $\epsilon_{\text{avg}} = 375(10^{-6})$,
$\theta_s = -2.12°$

10–11. The state of strain on an element has components $\epsilon_x = -150(10^{-6})$, $\epsilon_y = 450(10^{-6})$, $\gamma_{xy} = 200(10^{-6})$. Determine the equivalent state of strain on an element at the same point oriented 30° counterclockwise with respect to the original element. Sketch the results on this element.

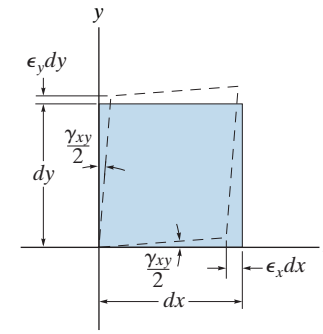

Strain Transformation Equations:

$$\epsilon_x = -150(10^{-6}) \qquad \epsilon_y = 450(10^{-6}) \qquad \gamma_{xy} = 200(10^{-6}) \qquad \theta = 30°$$

We obtain

$$\epsilon_{x'} = \frac{\epsilon_x + \epsilon_y}{2} + \frac{\epsilon_x - \epsilon_y}{2}\cos 2\theta + \frac{\gamma_{xy}}{2}\sin 2\theta$$

$$= \left[\frac{-150 + 450}{2} + \frac{-150 - 450}{2}\cos 60° + \frac{200}{2}\sin 60°\right](10^{-6})$$

$$= 86.6(10^{-6}) \qquad \textbf{Ans.}$$

$$\frac{\gamma_{x'y'}}{2} = -\left(\frac{\epsilon_x - \epsilon_y}{2}\right)\sin 2\theta + \frac{\gamma_{xy}}{2}\cos 2\theta$$

$$\gamma_{x'y'} = [-(-150 - 450)\sin 60° + 200\cos 60°](10^{-6})$$

$$= 620(10^{-6}) \qquad \textbf{Ans.}$$

$$\epsilon_{y'} = \frac{\epsilon_x + \epsilon_y}{2} - \frac{\epsilon_x - \epsilon_y}{2}\cos 2\theta - \frac{\gamma_{xy}}{2}\sin 2\theta$$

$$= \left[\frac{-150 + 450}{2} - \frac{-150 - 450}{2}\cos 60° - \frac{200}{2}\sin 60°\right](10^{-6})$$

$$= 213(10^{-6}) \qquad \textbf{Ans.}$$

The deformed element for this state of strain is shown in Fig. *a*.

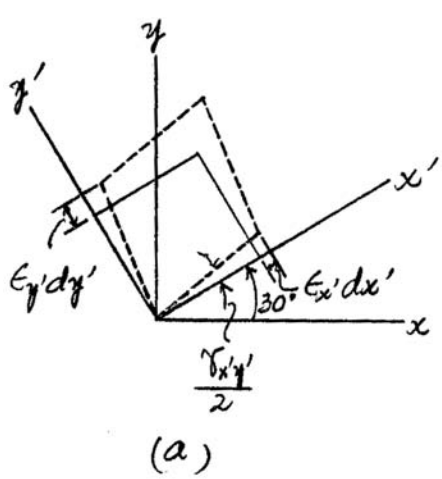

(a)

Ans:
$\epsilon_{x'} = 86.6(10^{-6})$, $\gamma_{x'y'} = 620(10^{-6})$,
$\epsilon_{y'} = 213(10^{-6})$

***10–12.** The state of strain on an element has components $\epsilon_x = -400(10^{-6})$, $\epsilon_y = 0$, $\gamma_{xy} = 150(10^{-6})$. Determine the equivalent state of strain on an element at the same point oriented 30° clockwise with respect to the original element. Sketch the results on this element.

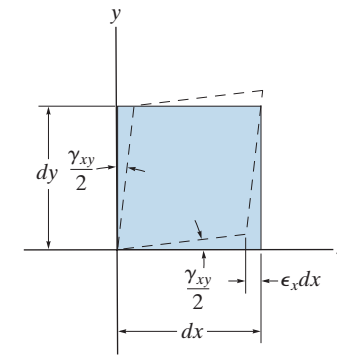

Strain Transformation Equations:

$$\epsilon_x = -400(10^{-6}) \qquad \epsilon_y = 0 \qquad \gamma_{xy} = 150(10^{-6}) \qquad \theta = -30°$$

We obtain

$$\epsilon_{x'} = \frac{\epsilon_x + \epsilon_y}{2} + \frac{\epsilon_x - \epsilon_y}{2}\cos 2\theta + \frac{\gamma_{xy}}{2}\sin 2\theta$$

$$= \left[\frac{-400 + 0}{2} + \frac{-400 - 0}{2}\cos(-60°) + \frac{150}{2}\sin(-60°)\right](10^{-6})$$

$$= -365(10^{-6}) \qquad \textbf{Ans.}$$

$$\frac{\gamma_{x'y'}}{2} = -\left(\frac{\epsilon_x - \epsilon_y}{2}\right)\sin 2\theta + \frac{\gamma_{xy}}{2}\cos 2\theta$$

$$\gamma_{x'y'} = [-(-400 - 0)\sin(-60°) + 150\cos(-60°)](10^{-6})$$

$$= -271(10^{-6}) \qquad \textbf{Ans.}$$

$$\epsilon_{y'} = \frac{\epsilon_x + \epsilon_y}{2} - \frac{\epsilon_x - \epsilon_y}{2}\cos 2\theta - \frac{\gamma_{xy}}{2}\sin 2\theta$$

$$= \left[\frac{-400 + 0}{2} - \frac{-400 - 0}{2}\cos(-60°) - \frac{150}{2}\sin(-60°)\right](10^{-6})$$

$$= -35.0(10^{-6}) \qquad \textbf{Ans.}$$

The deformed element for this state of strain is shown in Fig. *a*.

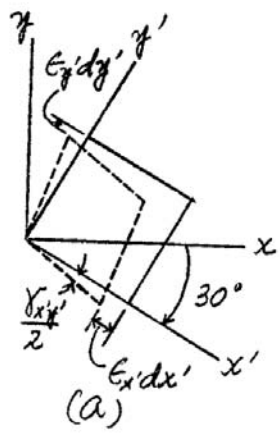

(a)

10–13. The state of plane strain on an element is $\epsilon_x = -300(10^{-6})$, $\epsilon_y = 0$, and $\gamma_{xy} = 150(10^{-6})$. Determine the equivalent state of strain which represents (a) the principal strains, and (b) the maximum in-plane shear strain and the associated average normal strain. Specify the orientation of the corresponding elements for these states of strain with respect to the original element.

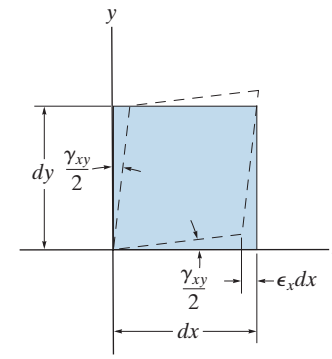

In-Plane Principal Strains: $\epsilon_x = -300\left(10^{-6}\right)$, $\epsilon_y = 0$, and $\gamma_{xy} = 150\left(10^{-6}\right)$. We obtain

$$\epsilon_{1,2} = \frac{\epsilon_x + \epsilon_y}{2} \pm \sqrt{\left(\frac{\epsilon_x - \epsilon_y}{2}\right)^2 + \left(\frac{\gamma_{xy}}{2}\right)^2}$$

$$= \left[\frac{-300 + 0}{2} \pm \sqrt{\left(\frac{-300 - 0}{2}\right)^2 + \left(\frac{150}{2}\right)^2}\right]\left(10^{-6}\right)$$

$$= (-150 \pm 167.71)\left(10^{-6}\right)$$

$\epsilon_1 = 17.7\left(10^{-6}\right)$ $\qquad$ $\epsilon_2 = -318\left(10^{-6}\right)$ **Ans.**

Orientation of Principal Strain:

$$\tan 2\theta_p = \frac{\gamma_{xy}}{\epsilon_x - \epsilon_y} = \frac{150\left(10^{-6}\right)}{(-300 - 0)\left(10^{-6}\right)} = -0.5$$

$\theta_P = -13.28°$ and $76.72°$

Substituting $\theta = -13.28°$ into Eq. 9-1,

$$\epsilon_{x'} = \frac{\epsilon_x + \epsilon_y}{2} + \frac{\epsilon_x - \epsilon_y}{2}\cos 2\theta + \frac{\gamma_{xy}}{2}\sin 2\theta$$

$$= \left[\frac{-300 + 0}{2} + \frac{-300 - 0}{2}\cos(-26.57°) + \frac{150}{2}\sin(-26.57°)\right]\left(10^{-6}\right)$$

$$= -318\left(10^{-6}\right) = \epsilon_2$$

Thus,

$\left(\theta_P\right)_1 = 76.7°$ and $\left(\theta_P\right)_2 = -13.3°$ **Ans.**

The deformed element of this state of strain is shown in Fig. *a*.

Maximum In-Plane Shear Strain:

$$\frac{\gamma_{\substack{\max \\ \text{in-plane}}}}{2} = \sqrt{\left(\frac{\epsilon_x - \epsilon_y}{2}\right)^2 + \left(\frac{\gamma_{xy}}{2}\right)^2}$$

$$\gamma_{\substack{\max \\ \text{in-plane}}} = \left[2\sqrt{\left(\frac{-300 - 0}{2}\right)^2 + \left(\frac{150}{2}\right)^2}\right]\left(10^{-6}\right) = 335\left(10^{-6}\right)$$ **Ans.**

Orientation of the Maximum In-Plane Shear Strain:

$$\tan 2\theta_s = -\left(\frac{\epsilon_x - \epsilon_y}{\gamma_{xy}}\right) = -\left[\frac{(-300 - 0)\left(10^{-6}\right)}{150\left(10^{-6}\right)}\right] = 2$$

$\theta_s = 31.7°$ and $122°$ **Ans.**

10–13. Continued

The algebraic sign for $\gamma_{\substack{\max \\ \text{in-plane}}}$ when $\theta = \theta_s = 31.7°$ can be obtained using

$$\frac{\gamma_{x'y'}}{2} = -\left(\frac{\epsilon_x - \epsilon_y}{2}\right)\sin 2\theta + \frac{\gamma_{xy}}{2}\cos 2\theta$$

$$\gamma_{x'y'} = [-(-300 - 0)\sin 63.43° + 150\cos 63.43°](10^{-6})$$
$$= 335(10^{-6})$$

Average Normal Strain:

$$\epsilon_{\text{avg}} = \frac{\epsilon_x + \epsilon_y}{2} = \left(\frac{-300 + 0}{2}\right)(10^{-6}) = -150(10^{-6})$$ **Ans.**

The deformed element for this state of strain is shown in Fig. *b*.

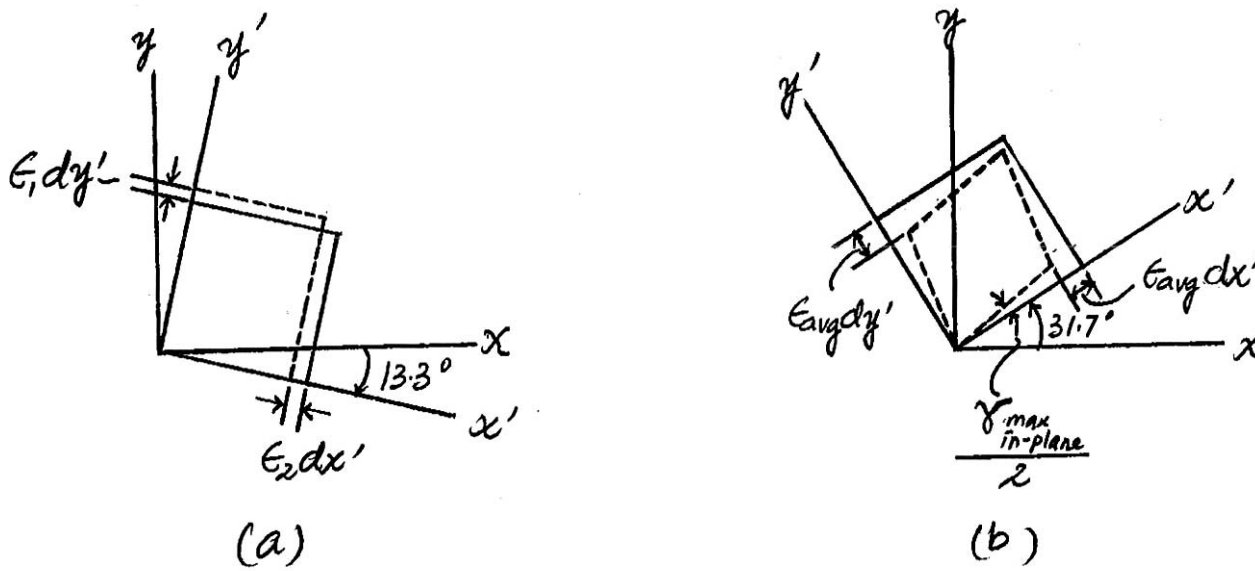

Ans:
$\epsilon_1 = 17.7(10^{-6})$, $\epsilon_2 = -318(10^{-6})$,
$\theta_{p1} = 76.7°$ and $\theta_{p2} = -13.3°$,
$\gamma_{\substack{\max \\ \text{in-plane}}} = 335(10^{-6})$, $\theta_s = 31.7°$ and $122°$,
$\epsilon_{\text{avg}} = -150(10^{-6})$

10–14. The state of strain at the point on a boom of an hydraulic engine crane has components of $\epsilon_x = 250(10^{-6})$, $\epsilon_y = 300(10^{-6})$, and $\gamma_{xy} = -180(10^{-6})$. Use the strain-transformation equations to determine (a) the in-plane principal strains and (b) the maximum in-plane shear strain and average normal strain. In each case, specify the orientation of the element and show how the strains deform the element within the x–y plane.

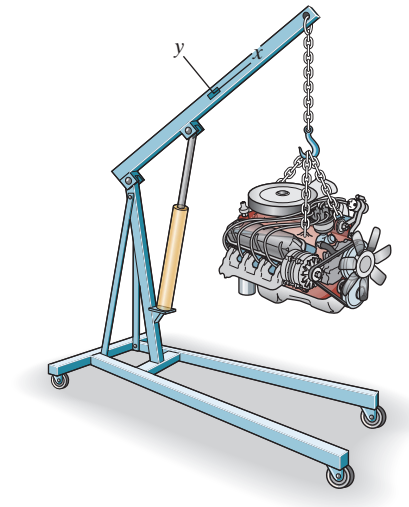

a)

In-Plane Principal Strain: Applying Eq. 10–9,

$$\epsilon_{1,2} = \frac{\epsilon_x + \epsilon_y}{2} \pm \sqrt{\left(\frac{\epsilon_x - \epsilon_y}{2}\right)^2 + \left(\frac{\gamma_{xy}}{2}\right)^2}$$

$$= \left[\frac{250 + 300}{2} \pm \sqrt{\left(\frac{250 - 300}{2}\right)^2 + \left(\frac{-180}{2}\right)^2}\right](10^{-6})$$

$$= 275 \pm 93.41$$

$$\epsilon_1 = 368(10^{-6}) \qquad \epsilon_2 = 182(10^{-6})$$ **Ans.**

Orientation of Principal Strain: Applying Eq. 10–8,

$$\tan 2\theta_P = \frac{\gamma_{xy}}{\epsilon_x - \epsilon_y} = \frac{-180(10^{-6})}{(250 - 300)(10^{-6})} = 3.600$$

$$\theta_P = 37.24° \quad \text{and} \quad -52.76°$$

Use Eq. 10–5 to determine which principal strain deforms the element in the x' direction with $\theta = 37.24°$.

$$\epsilon_{x'} = \frac{\epsilon_x + \epsilon_y}{2} + \frac{\epsilon_x - \epsilon_y}{2}\cos 2\theta + \frac{\gamma_{xy}}{2}\sin 2\theta$$

$$= \left[\frac{250 + 300}{2} + \frac{250 - 300}{2}\cos 74.48° + \frac{-180}{2}\sin 74.48°\right](10^{-6})$$

$$= 182(10^{-6}) = \epsilon_2$$

Hence,

$$\theta_{P1} = -52.8° \quad \text{and} \quad \theta_{P2} = 37.2°$$ **Ans.**

b)

Maximum In-Plane Shear Strain: Applying Eq. 10–11,

$$\frac{\gamma_{\substack{\max \\ \text{in-plane}}}}{2} = \sqrt{\left(\frac{\epsilon_x - \epsilon_y}{2}\right)^2 + \left(\frac{\gamma_{xy}}{2}\right)^2}$$

$$\gamma_{\substack{\max \\ \text{in-plane}}} = 2\left[\sqrt{\left(\frac{250 - 300}{2}\right)^2 + \left(\frac{-180}{2}\right)^2}\right](10^{-6})$$

$$= 187(10^{-6})$$ **Ans.**

10–14. Continued

Orientation of the Maximum In-Plane Shear Strain: Applying Eq. 10–10,

$$\tan 2\theta_s = -\frac{\epsilon_x - \epsilon_y}{\gamma_{xy}} = -\frac{250 - 300}{-180} = -0.2778$$

$$\theta_s = -7.76^\circ \qquad \text{and} \qquad 82.2^\circ$$ **Ans.**

The proper sign of $\gamma_{\substack{\max \\ \text{in-plane}}}$ can be determined by substituting $\theta = -7.76^\circ$ into Eq. 10–6.

$$\frac{\gamma_{x'y'}}{2} = -\frac{\epsilon_x - \epsilon_y}{2}\sin 2\theta + \frac{\gamma_{xy}}{2}\cos 2\theta$$

$$\gamma_{x'y'} = \{-[250 - 300]\sin(-15.52^\circ) + (-180)\cos(-15.52^\circ)\}\left(10^{-6}\right)$$
$$= -187\left(10^{-6}\right)$$

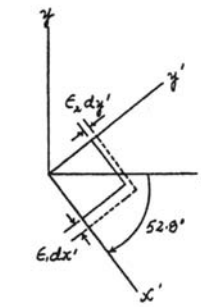

Normal Strain and Shear Strain: In accordance with the sign convention,

$$\epsilon_x = 250\left(10^{-6}\right) \qquad \epsilon_y = 300\left(10^{-6}\right) \qquad \gamma_{xy} = -180\left(10^{-6}\right)$$

Average Normal Strain: Applying Eq. 10–12,

$$\epsilon_{\text{avg}} = \frac{\epsilon_x + \epsilon_y}{2} = \left[\frac{250 + 300}{2}\right]\left(10^{-6}\right) = 275\left(10^{-6}\right)$$ **Ans.**

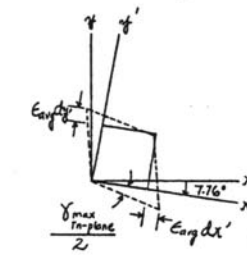

Ans:
$\epsilon_1 = 368(10^{-6})$, $\epsilon_2 = 182(10^{-6})$,
$\theta_{p1} = -52.8^\circ$ and $\theta_{p2} = 37.2^\circ$,
$\gamma_{\substack{\max \\ \text{in-plane}}} = 187(10^{-6})$, $\theta_s = -7.76^\circ$ and 82.2°,
$\epsilon_{\text{avg}} = 275\,(10^{-6})$

***10–16.** The state of strain on an element has components $\epsilon_x = -300\,(10^{-6})$, $\epsilon_y = 100\,(10^{-6})$, $\gamma_{xy} = 150\,(10^{-6})$. Determine the equivalent state of strain, which represents (a) the principal strains, and (b) the maximum in-plane shear strain and the associated average normal strain. Specify the orientation of the corresponding elements for these states of strain with respect to the original element.

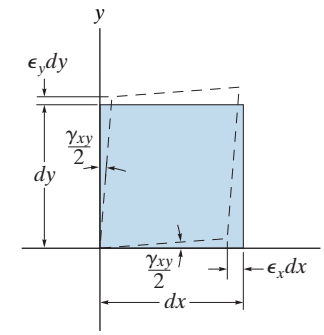

In-Plane Principal Strains: $\epsilon_x = -300(10^{-6})$, $\epsilon_y = 100(10^{-6})$, and $\gamma_{xy} = 150(10^{-6})$. We obtain

$$\epsilon_{1,2} = \frac{\epsilon_x + \epsilon_y}{2} \pm \sqrt{\left(\frac{\epsilon_x - \epsilon_y}{2}\right)^2 + \left(\frac{\gamma_{xy}}{2}\right)^2}$$

$$= \left[\frac{-300 + 100}{2} \pm \sqrt{\left(\frac{-300 - 100}{2}\right)^2 + \left(\frac{150}{2}\right)^2}\right](10^{-6})$$

$$= (-100 \pm 213.60)(10^{-6})$$

$$\epsilon_1 = 114(10^{-6}) \qquad \epsilon_2 = -314(10^{-6})$$ **Ans.**

Orientation of Principal Strains:

$$\tan 2\theta_p = \frac{\gamma_{xy}}{\epsilon_x - \epsilon_y} = \frac{150(10^{-6})}{(-300 - 100)(10^{-6})} = -0.375$$

$$\theta_p = -10.28° \text{ and } 79.72°$$

Substituting $\theta = -10.28°$ into

$$\epsilon_{x'} = \frac{\epsilon_x + \epsilon_y}{2} + \frac{\epsilon_x - \epsilon_y}{2}\cos 2\theta + \frac{\gamma_{xy}}{2}\sin 2\theta$$

$$= \left[\frac{-300 + 100}{2} + \frac{-300 - 100}{2}\cos(-20.56°) + \frac{150}{2}\sin(-20.56°)\right](10^{-6})$$

$$= -314(10^{-6}) = \epsilon_2$$

Thus,

$$(\theta_p)_1 = 79.7° \text{ and } (\theta_p)_2 = -10.3°$$ **Ans.**

The deformed element for the state of principal strain is shown in Fig. *a*.

Maximum In-Plane Shear Strain:

$$\frac{\gamma_{\substack{\max \\ \text{in-plane}}}}{2} = \sqrt{\left(\frac{\epsilon_x - \epsilon_y}{2}\right)^2 + \left(\frac{\gamma_{xy}}{2}\right)^2}$$

$$\gamma_{\substack{\max \\ \text{in-plane}}} = \left[2\sqrt{\left(\frac{-300 - 100}{2}\right)^2 + \left(\frac{150}{2}\right)^2}\right](10^{-6}) = 427(10^{-6})$$ **Ans.**

10–16. Continued

Orientation of Maximum In-Plane Shear Strain:

$$\tan 2\theta_s = -\left(\frac{\epsilon_x - \epsilon_y}{\gamma_{xy}}\right) = -\left[\frac{(-300 - 100)(10^{-6})}{150(10^{-6})}\right](10^{-6}) = 2.6667$$

$$\theta_s = 34.7° \text{ and } 125° \qquad \textbf{Ans.}$$

The algebraic sign for $\gamma_{\substack{\max \\ \text{in-plane}}}$ when $\theta = \theta_s = 34.7°$ can be determined using

$$\frac{\gamma_{x'y'}}{2} = -\left(\frac{\epsilon_x - \epsilon_y}{2}\right)\sin 2\theta + \frac{\gamma_{xy}}{2}\cos 2\theta$$

$$\gamma_{x'y'} = [-(-300 - 100)\sin 69.44° + 150\cos 69.44°](10^{-6})$$

$$= 427(10^{-6})$$

Average Normal Strain:

$$\epsilon_{\text{avg}} = \frac{\epsilon_x + \epsilon_y}{2} = \left(\frac{-300 + 100}{2}\right)(10^{-6}) = -100(10^{-6}) \qquad \textbf{Ans.}$$

The deformed element for this state of maximum in-plane shear strain is shown in Fig. *b*.

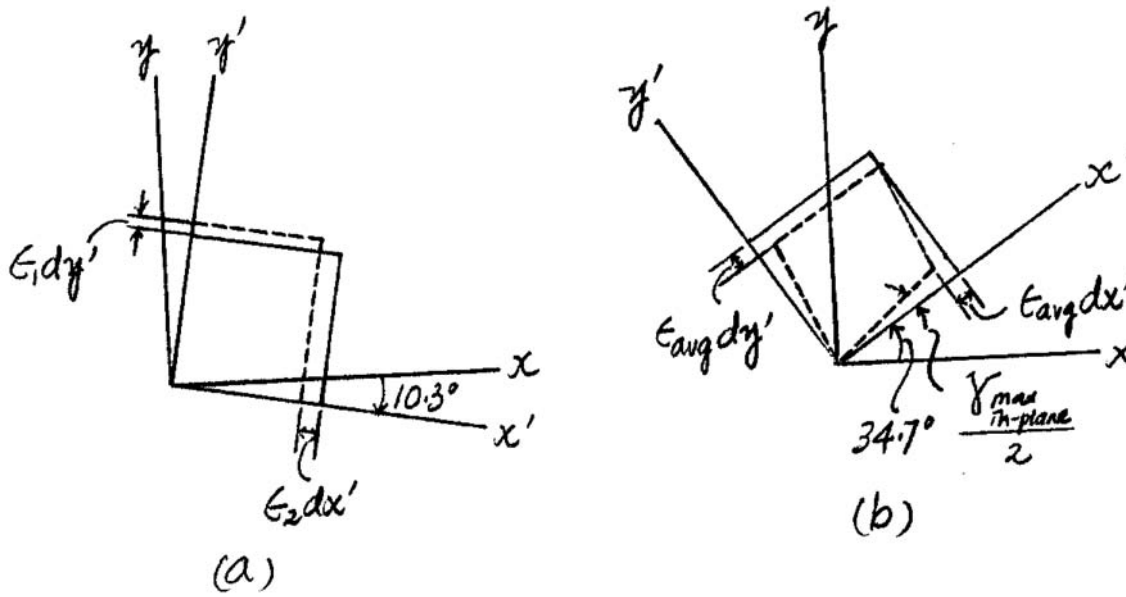

10–17. Solve part (a) of Prob. 10–3 using Mohr's circle.

$\epsilon_x = 120(10^{-6}) \qquad \epsilon_y = -180(10^{-6}) \qquad \gamma_{xy} = 150(10^{-6})$

$A\ (120, 75)(10^{-6}) \quad C\ (-30, 0)(10^{-6})$

$R = \left[\sqrt{[120 - (-30)]^2 + (75)^2}\right](10^{-6})$

$= 167.71\ (10^{-6})$

$\epsilon_1 = (-30 + 167.71)(10^{-6}) = 138(10^{-6})$ **Ans.**

$\epsilon_2 = (-30 - 167.71)(10^{-6}) = -198(10^{-6})$ **Ans.**

$\tan 2\theta_P = \left(\dfrac{75}{30 + 120}\right), \quad \theta_P = 13.3°$ **Ans.**

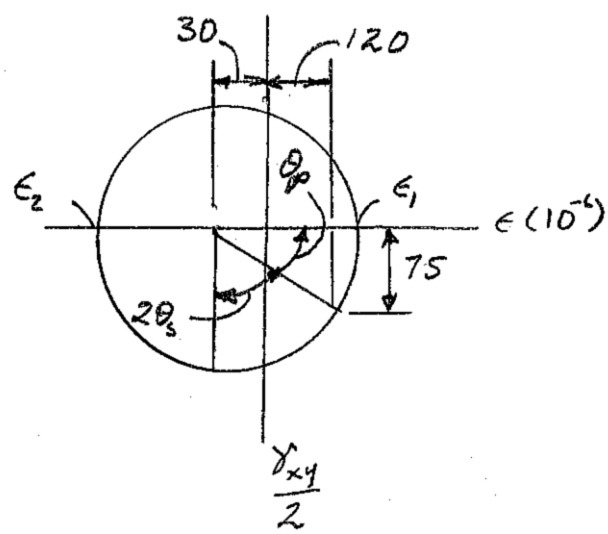

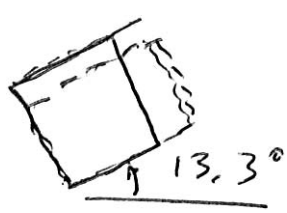

Ans:
$\epsilon_1 = 138(10^{-6}), \epsilon_2 = -198(10^{-6}), \theta_p = 13.3°$

10–18. Solve part (b) of Prob. 10–3 using Mohr's circle.

$\epsilon_x = 120(10^{-6}) \qquad \epsilon_y = -180(10^{-6}) \qquad \gamma_{xy} = 150(10^{-6})$

$A\ (120, 75)(10^{-6}) \quad C\ (-30, 0)(10^{-6})$

$R = \left[\sqrt{[120 - (-30)]^2 + (75)^2}\right](10^{-6})$

$= 167.71\ (10^{-6})$

$\dfrac{\gamma_{xy}}{2} = R = 167.7(10^{-6})$

$\gamma_{\substack{\text{max}\\ \text{in-plane}}} = 335(10^{-6})$ **Ans.**

$\epsilon_{\text{avg}} = -30\ (10^{-6})$ **Ans.**

$\tan 2\theta_s = \dfrac{120 + 30}{75} \qquad \theta_s = -31.7°$ **Ans.**

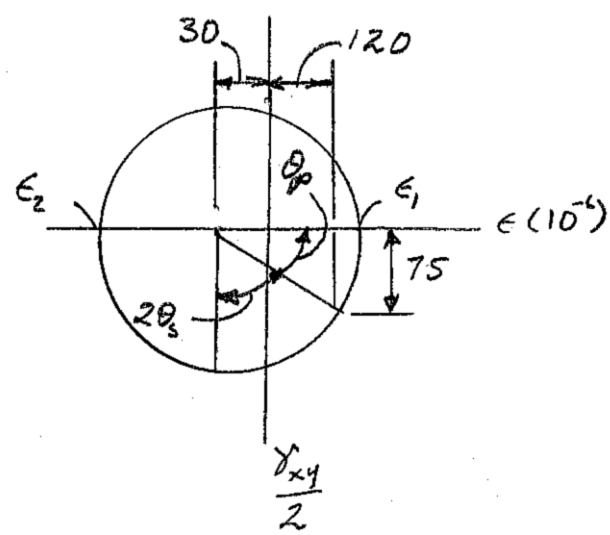

Ans:
$\gamma_{\substack{\text{max}\\ \text{in-plane}}} = 335(10^{-6}), \epsilon_{\text{avg}} = -30(10^{-6}),$
$\theta_s = -31.7°$

10–19. Solve Prob. 10–4 using Mohr's circle.

$\epsilon_x = 850(10^{-6})$ $\quad \epsilon_y = 480(10^{-6})$ $\quad \gamma_{xy} = 650(10^{-6})$ $\quad \dfrac{\gamma_{xy}}{2} = 325(10^{-6})$

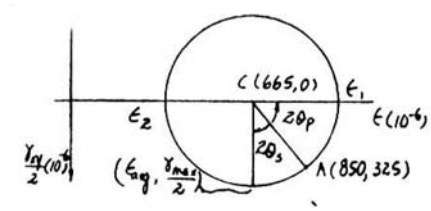

$A(850, 325)(10^{-6}) \quad C(665, 0)(10^{-6})$

$R = [\sqrt{(850 - 665)^2 + 325^2}](10^{-6}) = 373.97(10^{-6})$

$\epsilon_1 = (665 + 373.97)(10^{-6}) = 1039(10^{-6})$ **Ans.**

$\epsilon_2 = (665 - 373.97)(10^{-6}) = 291(10^{-6})$ **Ans.**

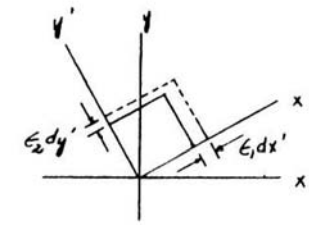

$\tan 2\theta_p = \dfrac{325}{850 - 665}$

$2\theta_p = 60.35°$ (Mohr's circle)

$\theta_p = 30.2°$ **Ans.** (element)

$\dfrac{\gamma_{\substack{\text{max}\\ \text{in-plane}}}}{2} = R$

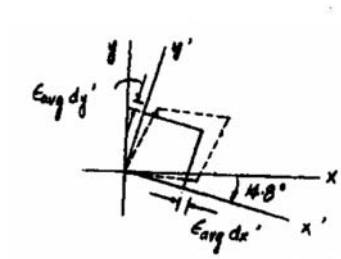

$\gamma_{\substack{\text{max}\\ \text{in-plane}}} = 2(373.97)(10^{-6}) = 748(10^{-6})$ **Ans.**

$\epsilon_{\text{avg}} = 665(10^{-6})$ **Ans.**

$2\theta_s = 90° - 2\theta_p = 29.65°$ (Mohr's circle)

$\theta_s = -14.8°$ **Ans.** (element)

Ans:
$\epsilon_1 = 1039(10^{-6})$, $\epsilon_2 = 291(10^{-6})$, $\theta_p = 30.2°$,
$\gamma_{\substack{\text{max}\\ \text{in-plane}}} = 748(10^{-9})$, $\epsilon_{\text{avg}} = 665(10^{-6})$,
$\theta_s = -14.8°$

***10–20.** Solve Prob. 10–5 using Mohr's circle.

a) $\epsilon_x = 520(10^{-6})$ $\quad \epsilon_y = -760(10^{-6})$ $\quad \gamma_{xy} = -750(10^{-6})$ $\quad \dfrac{\gamma_{xy}}{2} = -375(10^{-6})$

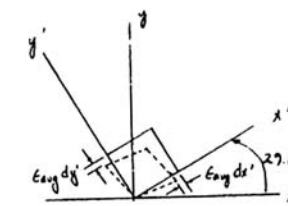

$A(520, -375)$; $C(-120, 0)$

$R = \sqrt{(520 + 120)^2 + 375^2} = 741.77$

$\epsilon_1 = 741.77 - 120 = 622(10^{-6})$ **Ans.**

$\epsilon_2 = -120 - 741.77 = -862(10^{-6})$ **Ans.**

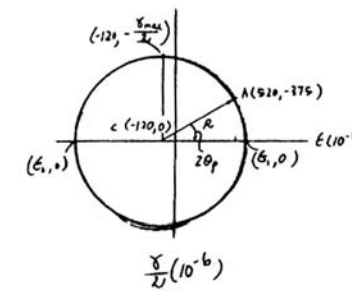

$\tan 2\theta_{p1} = \dfrac{375}{(120 + 520)} = 0.5859$

$\theta_{p1} = 15.2°$ **Ans.**

b) $\gamma_{\substack{\max \\ \text{in-plane}}} = 2R = 2(741.77)$

$\gamma_{\substack{\max \\ \text{in-plane}}} = -1484(10^{-6})$ **Ans.**

$\epsilon_{avg} = -120(10^{-6})$ **Ans.**

$\tan 2\theta_s = \dfrac{(120 + 520)}{375} = 1.7067$

$\theta_s = 29.8°$ **Ans.**

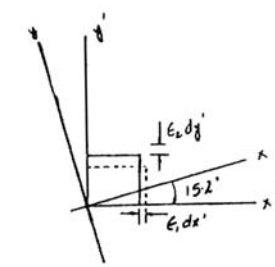

10–21. Solve Prob. 10–7 using Mohr's circle.

$\epsilon_x = 150(10^{-6})$ $\quad \epsilon_y = 200(10^{-6})$ $\quad \gamma_{xy} = -700(10^{-6})$ $\quad \dfrac{\gamma_{xy}}{2} = -350(10^{-6})$

$\theta = -30^\circ \quad 2\theta = -60^\circ$

$A(150, -350); \qquad C(175, 0)$

$R = \sqrt{(175 - 150)^2 + (-350)^2} = 350.89$

Coordinates of point B:

$\epsilon_{x'} = 350.89 \cos 34.09^\circ + 175$

$= 466(10^{-6})$ **Ans.**

$\dfrac{\gamma_{x'y'}}{2} = -350.89 \sin 34.09^\circ$

$\gamma_{x'y'} = -393(10^{-6})$ **Ans.**

Coordinates of point D:

$\epsilon_{y'} = 175 - 350.89 \cos 34.09^\circ$

$= -116(10^{-6})$ **Ans.**

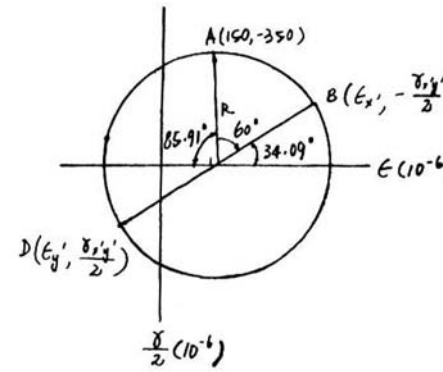

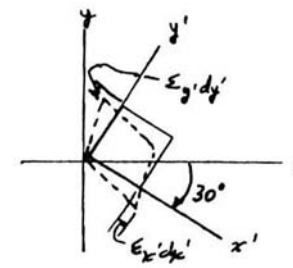

Ans:
$\epsilon_{x'} = 466(10^{-6})$, $\gamma_{x'y'} = -393(10^{-6})$,
$\epsilon_{y'} = -116(10^{-6})$

10–22. The strain at point A on the bracket has components $\epsilon_x = 300(10^{-6})$, $\epsilon_y = 550(10^{-6})$, $\gamma_{xy} = -650(10^{-6})$, $\epsilon_z = 0$. Determine (a) the principal strains at A in the x–y plane, (b) the maximum shear strain in the x–y plane, and (c) the absolute maximum shear strain.

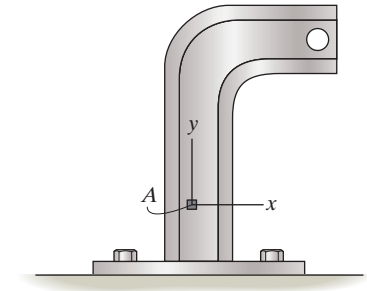

$\epsilon_x = 300(10^{-6})$ $\quad \epsilon_y = 550(10^{-6})$ $\quad \gamma_{xy} = -650(10^{-6})$ $\quad \dfrac{\gamma_{xy}}{2} = -325(10^{-6})$

$A(300, -325)10^{-6}$ $\quad C(425, 0)10^{-6}$

$R = \left[\sqrt{(425 - 300)^2 + (-325)^2}\right]10^{-6} = 348.2(10^{-6})$

a)

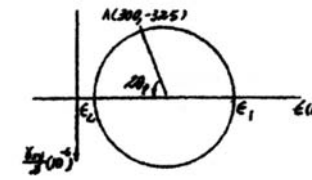

$\epsilon_1 = (425 + 348.2)(10^{-6}) = 773(10^{-6})$ **Ans.**

$\epsilon_2 = (425 - 348.2)(10^{-6}) = 76.8(10^{-6})$ **Ans.**

b)

$\gamma_{\substack{\max \\ \text{in-plane}}} = 2R = 2(348.2)(10^{-6}) = 696(10^{-6})$ **Ans.**

c)

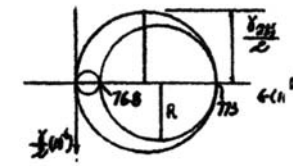

$\dfrac{\gamma_{\substack{\text{abs} \\ \max}}}{2} = \dfrac{773(10^{-6})}{2}$; $\quad \gamma_{\substack{\text{abs} \\ \max}} = 773(10^{-6})$ **Ans.**

Ans:
(a) $\epsilon_1 = 773(10^{-6})$, $\epsilon_2 = 76.8(10^{-6})$,
(b) $\gamma_{\substack{\max \\ \text{in-plane}}} = 696(10^{-6})$,
(c) $\gamma_{\substack{\text{abs} \\ \max}} = 773(10^{-6})$

10–23. The strain at point A on a beam has components $\epsilon_x = 450(10^{-6})$, $\epsilon_y = 825(10^{-6})$, $\gamma_{xy} = 275(10^{-6})$, $\epsilon_z = 0$. Determine (a) the principal strains at A, (b) the maximum shear strain in the x–y plane, and (c) the absolute maximum shear strain.

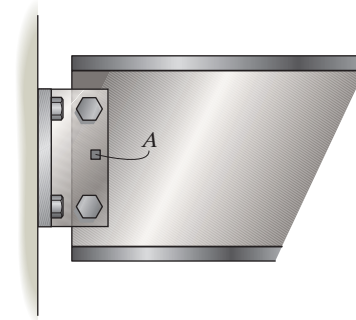

$\epsilon_x = 450(10^{-6})$ $\quad \epsilon_y = 825(10^{-6})$ $\quad \gamma_{xy} = 275(10^{-6})$ $\quad \dfrac{\gamma_{xy}}{2} = 137.5(10^{-6})$

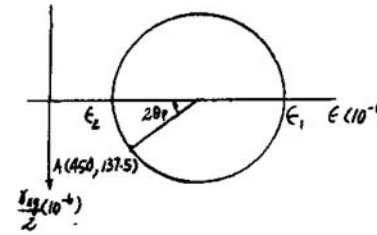

$A(450, 137.5)10^{-6}$ $\quad C(637.5, 0)10^{-6}$

$R = [\sqrt{(637.5 - 450)^2 + 137.5^2}]10^{-6} = 232.51(10^{-6})$

a)

$\epsilon_1 = (637.5 + 232.51)(10^{-6}) = 870(10^{-6})$ **Ans.**

$\epsilon_2 = (637.5 - 232.51)(10^{-6}) = 405(10^{-6})$ **Ans.**

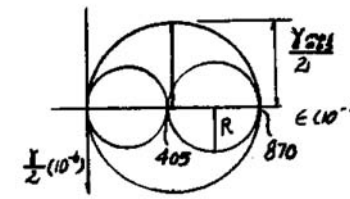

b)

$\gamma_{\substack{\max \\ \text{in-plane}}} = 2R = 2(232.51)(10^{-6}) = 465(10^{-6})$ **Ans.**

c)

$\dfrac{\gamma_{\substack{\text{abs} \\ \max}}}{2} = \dfrac{870(10^{-6})}{2}$; $\quad \gamma_{\substack{\text{abs} \\ \max}} = 870(10^{-6})$ **Ans.**

Ans:
(a) $\epsilon_1 = 870(10^{-6})$, $\epsilon_2 = 405(10^{-6})$,
(b) $\gamma_{\substack{\max \\ \text{in-plane}}} = 465(10^{-6})$,
(c) $\gamma_{\substack{\text{abs} \\ \max}} = 870(10^{-6})$

***10–24.** The steel bar is subjected to the tensile load of 500 lb. If it is 0.5 in. thick determine the three principal strains. $E = 29(10^3)$ ksi, $\nu = 0.3$.

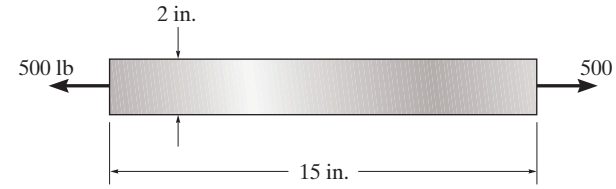

$$\sigma_x = \frac{500}{2(0.5)} = 500 \text{ psi} \qquad \sigma_y = 0 \qquad \sigma_z = 0$$

$$\epsilon_x = \frac{1}{E}(\sigma_x) = \frac{1}{29(10^6)}(500) = 17.2414\,(10^{-6})$$

$$\epsilon_y = \epsilon_z = -\nu\epsilon_x = -0.3(17.2414)(10^{-6}) = -5.1724(10^{-6})$$

$$\epsilon_1 = 17.2(10^{-6}) \qquad \epsilon_{2,3} = -5.17(10^{-6})$$ **Ans.**

10–25. The 45° strain rosette is mounted on a machine element. The following readings are obtained from each gauge: $\epsilon_a = 650(10^{-6})$, $\epsilon_b = -300(10^{-6})$, $\epsilon_c = 480(10^{-6})$. Determine (a) the in-plane principal strains and (b) the maximum in-plane shear strain and associated average normal strain. In each case show the deformed element due to these strains.

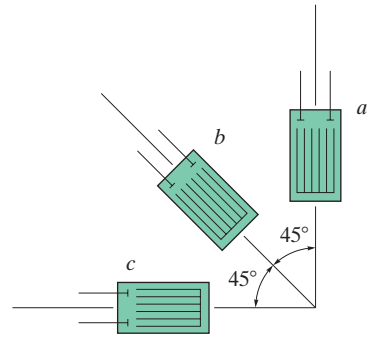

$\epsilon_a = 650(10^{-6})$ $\qquad$ $\epsilon_b = -300(10^{-6})$ $\qquad$ $\epsilon_c = 480(10^{-6})$

$\theta_a = 90°$ $\qquad$ $\theta_b = 135°$ $\qquad$ $\theta_c = 180°$

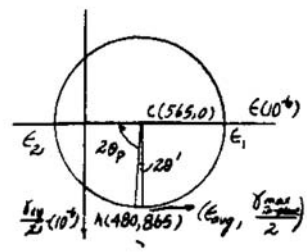

$$\epsilon_a = \epsilon_x \cos^2\theta_a + \epsilon_y \sin^2\theta_a + \gamma_{xy}\sin\theta_a\cos\theta_a$$

$$650(10^{-6}) = \epsilon_x \cos^2 90° + \epsilon_y \sin^2 90° + \gamma_{xy}\sin 90° \cos 90°$$

$$\epsilon_x = 650(10^{-6})$$

$$\epsilon_c = \epsilon_x \cos^2\theta_c + \epsilon_y \sin^2\theta_c + \gamma_{xy}\sin\theta_c\cos\theta_c$$

$$480(10^{-6}) = \epsilon_x \cos^2 180° + \epsilon_y \sin^2 180° + \gamma_{xy}\sin 180° \cos 180°$$

$$\epsilon_y = 480(10^{-6})$$

$$\epsilon_b = \epsilon_x \cos^2\theta_b + \epsilon_y \sin^2\theta_b + \gamma_{xy}\sin\theta_b\cos\theta_b$$

$$-300(10^{-6}) = 480(10^{-6})\cos^2 135° + 650(10^{-6})\sin^2 135° + \gamma_{xy}\sin 135° \cos 135°$$

$$\gamma_{xy} = 1730(10^{-6})$$

$$\frac{\gamma_{xy}}{2} = 865(10^{-6})$$

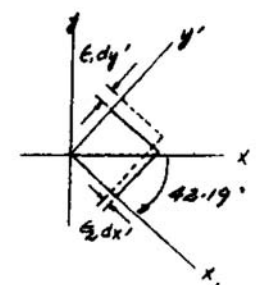

$A(480, 865)10^{-6}$ $\qquad$ $C(565, 0)10^{-6}$

$$R = (\sqrt{(565 - 480)^2 + 865^2})10^{-6} = 869.17(10^{-6})$$

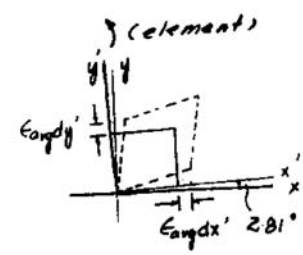

a)

$$\epsilon_1 = (565 + 869.17)10^{-6} = 1434(10^{-6})$$ **Ans.**

$$\epsilon_2 = (565 - 869.17)10^{-6} = -304(10^{-6})$$ **Ans.**

$$\tan 2\theta_p = \frac{865}{565 - 480}$$

$2\theta_p = 84.39°$ (Mohr's circle)

$\theta_p = -42.19°$ (element)

b)

$$\gamma_{\substack{\max \\ \text{in-plane}}} = 2R = 2(869.17)(10^{-6}) = 1738(10^{-6})$$ **Ans.**

$$\epsilon_{avg} = 565(10^{-6})$$ **Ans.**

$2\theta_s = 90° - 2\theta_p = 5.61°$ (Mohr's circle)

$\theta_s = 2.81°$ (element)

Ans:
$\epsilon_1 = 1434(10^{-6})$, $\epsilon_2 = -304(10^{-6})$,
$\gamma_{\substack{\max \\ \text{in-plane}}} = 1738(10^{-6})$, $\epsilon_{avg} = 565(10^{-6})$

10–26. The 60° strain rosette is attached to point A on the surface of the support. Due to the loading the strain gauges give a reading of $\epsilon_a = 300(10^{-6})$, $\epsilon_b = -150(10^{-6})$, and $\epsilon_c = -450(10^{-6})$. Use Mohr's circle and determine (a) the in-plane principal strains and (b) the maximum in-plane shear strain and the associated average normal strain. Specify the orientation of each element that has these states of strain with respect to the x axis.

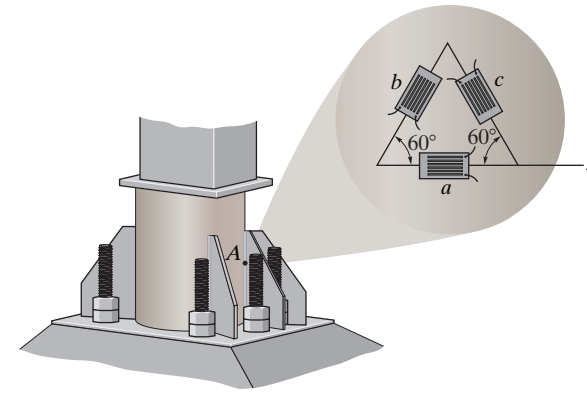

Normal and Shear Strain: With $\theta_a = 0°$, $\theta_b = 60°$, and $\theta_c = 120°$, we have

$$\epsilon_a = \epsilon_x \cos^2 \theta_a + \epsilon_y \sin^2 \theta_a + \gamma_{xy} \sin \theta_a \cos \theta_a$$

$$300(10^{-6}) = \epsilon_x \cos^2 0° + \epsilon_y \sin^2 0° + \gamma_{xy} \sin 0° \cos 0°$$

$$\epsilon_x = 300(10^{-6})$$

$$\epsilon_b = \epsilon_x \cos^2 \theta_b + \epsilon_y \sin^2 \theta_b + \gamma_{xy} \sin \theta_b \cos \theta_b$$

$$-150(10^{-6}) = 300(10^{-6}) \cos^2 60° + \epsilon_y \sin^2 60° + \gamma_{xy} \sin 60° \cos 60°$$

$$0.75\epsilon_y + 0.43301\gamma_{xy} = -225(10^{-6}) \qquad (1)$$

$$\epsilon_c = \epsilon_x \cos^2 \theta_c + \epsilon_y \sin^2 \theta_c + \gamma_{xy} \sin \theta_c \cos \theta_c$$

$$-450(10^{-6}) = 300(10^{-6}) \cos^2 120° + \epsilon_y \sin^2 120° + \gamma_{xy} \sin 120° \cos 120°$$

$$0.75\epsilon_y - 0.43301\gamma_{xy} = -525(10^{-6}) \qquad (2)$$

Solving Eqs. (1) and (2),

$$\epsilon_y = -500(10^{-6}) \qquad \gamma_{xy} = 346.41(10^{-6})$$

Construction of the Circle: $\epsilon_x = 300(10^{-6})$, $\epsilon_y = -500(10^{-6})$, and $\dfrac{\gamma_{xy}}{2} = 173.20(10^{-6})$. Thus

$$\epsilon_{\text{avg}} = \frac{\epsilon_x + \epsilon_y}{2} = \left[\frac{300 + (-500)}{2}\right](10^{-6}) = -100(10^{-6}) \qquad \textbf{Ans.}$$

The coordinates of reference point A and center of C of the circle are

$$A(300, 173.20)(10^{-6}) \qquad C(-100, 0)(10^{-6})$$

Thus, the radius of the circle is

$$R = CA = \left(\sqrt{[300 - (-100)]^2 + 173.20^2}\right)(10^{-6}) = 435.89(10^{-6})$$

Using these results, the circle is shown in Fig. a.

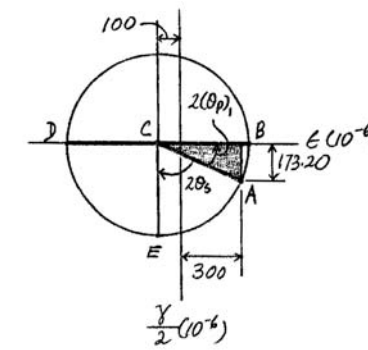

(a)

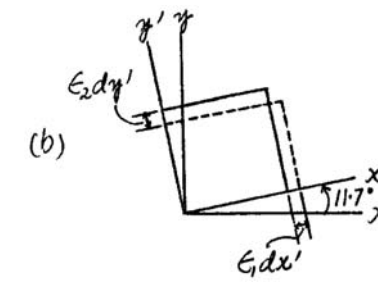

(b)

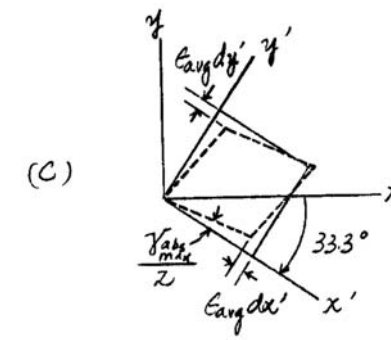

(c)

In-Plane Principal Strains: The coordinates of reference points B and D represent ϵ_1 and ϵ_2, respectively.

$$\epsilon_1 = (-100 + 435.89)(10^{-6}) = 336(10^{-6}) \qquad \textbf{Ans.}$$

$$\epsilon_2 = (-100 - 435.89)(10^{-6}) = -536(10^{-6}) \qquad \textbf{Ans.}$$

10–26. Continued

Orientation of Principal Strain: Referring to the geometry of the circle,

$$\tan 2(\theta_p)_1 = \frac{173.20(10^{-6})}{(300 + 100)(10^{-6})} = 0.43301$$

$$(\theta_p)_1 = 11.7^\circ \qquad \text{(counterclockwise)} \qquad \textbf{Ans.}$$

The deformed element for the state of principal strain is shown in Fig. *b*.

Maximum In-Plane Shear Strain: The coordinates of point E represent ϵ_{avg} and $\frac{\gamma_{\substack{\text{max}\\\text{in-plane}}}}{2}$. Thus

$$\frac{\gamma_{\substack{\text{max}\\\text{in-plane}}}}{2} = R = (435.89)(10^{-6})$$

$$\gamma_{\substack{\text{max}\\\text{in-plane}}} = 872(10^{-6}) \qquad \textbf{Ans.}$$

Orientation of Maximum In-Plane Shear Strain: Referring to the geometry of the circle,

$$\tan 2\theta_s = \frac{300 + 100}{173.20} = 2.3094$$

$$\theta_s = 33.3^\circ \qquad \text{(clockwise)} \qquad \textbf{Ans.}$$

The deformed element for the state of maximum in-plane shear strain is shown in Fig. *c*.

Ans:
$\epsilon_1 = 336(10^{-6})$, $\epsilon_2 = -536(10^{-6})$,
$\theta_{p1} = 11.7^\circ$ (counterclockwise),
$\gamma_{\substack{\text{max}\\\text{in-plane}}} = 872(10^{-6})$, $\epsilon_{avg} = -100(10^{-6})$,
$\theta_s = 33.3^\circ$ (clockwise)

10–27. The strain rosette is attached at the point on the surface of the pump. Due to the loading, the strain gauges give a reading of $\epsilon_a = -250(10^{-6})$, $\epsilon_b = -300(10^{-6})$, and $\epsilon_c = -200(10^{-6})$. Determine (a) the in-plane principal strains, and (b) the maximum in-plane shear strain. Specify the orientation of each element that has these states of strain with respect to the x axis.

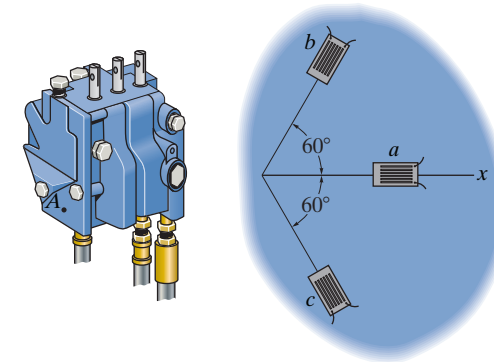

Normal and Shear Strains: With $\theta_a = 0°$, $\theta_b = 60°$, and $\theta_c = -60°$, we have

$$\epsilon_a = \epsilon_x \cos^2 \theta_a + \epsilon_y \sin^2 \theta_a + \gamma_{xy} \sin \theta_a \cos \theta_a$$

$$-250(10^{-6}) = \epsilon_x \cos^2 0° + \epsilon_y \sin^2 0° + \gamma_{xy} \sin 0° \cos 0°$$

$$\epsilon_x = -250(10^{-6})$$

$$\epsilon_b = \epsilon_x \cos^2 \theta_b + \epsilon_y \sin^2 \theta_b + \gamma_{xy} \sin \theta_b \cos \theta_b$$

$$300(10^{-6}) = -250(10^{-6}) \cos^2 60° + \epsilon_y \sin^2 60° + \gamma_{xy} \sin 60° \cos 60°$$

$$0.75\epsilon_y + 0.43301\gamma_{xy} = 362.5(10^{-6}) \qquad (1)$$

$$\epsilon_c = \epsilon_x \cos^2 \theta_c + \epsilon_y \sin^2 \theta_c + \gamma_{xy} \sin \theta_c \cos \theta_c$$

$$-200(10^{-6}) = -250(10^{-6}) \cos^2 (-60°) + \epsilon_y \sin^2 (-60°) + \gamma_{xy} \sin (-60°) \cos (-60°)$$

$$0.75\epsilon_y - 0.43301\gamma_{xy} = -137.5(10^{-6}) \qquad (2)$$

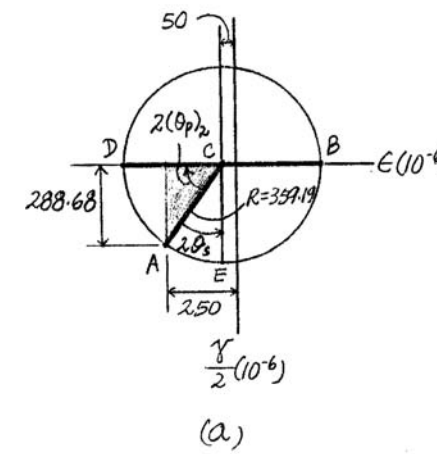

Solving Eqs. (1) and (2), we obtain

$$\epsilon_y = 150(10^{-6}) \qquad \gamma_{xy} = 577.35(10^{-6})$$

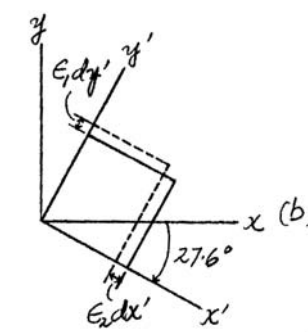

Construction of the Circle: $\epsilon_x = -250(10^{-6})$, $\epsilon_y = 150(10^{-6})$, and $\dfrac{\gamma_{xy}}{2} = 288.68(10^{-6})$. Thus

$$\epsilon_{\text{avg}} = \frac{\epsilon_x + \epsilon_y}{2} = \left(\frac{-250 + 150}{2}\right)(10^{-6}) = -50(10^{-6}) \qquad \textbf{Ans.}$$

The coordinates of reference point A and center of C of the circle are

$$A(-250, 288.68)(10^{-6}) \qquad C(-50, 0)(10^{-6})$$

Thus, the radius of the circle is

$$R = CA = \left(\sqrt{[-250 - (-50)]^2 + 288.68^2}\right)(10^{-6}) = 351.19(10^{-6})$$

Using these results, the circle is shown in Fig. a.

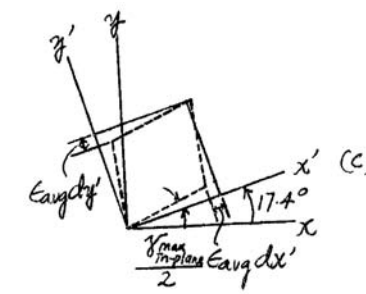

In-Plane Principal Strains: The coordinates of reference points B and D represent ϵ_1 and ϵ_2, respectively.

$$\epsilon_1 = (-50 + 351.19)(10^{-6}) = 301(10^{-6}) \qquad \textbf{Ans.}$$

$$\epsilon_2 = (-50 - 351.19)(10^{-6}) = -401(10^{-6}) \qquad \textbf{Ans.}$$

10–27. Continued

Orientation of Principal Strain: Referring to the geometry of the circle,

$$\tan 2(\theta_p)_2 = \frac{288.68}{250 - 50} = 1.4434$$

$$(\theta_p)_2 = 27.6^\circ \text{ (clockwise)} \qquad \textbf{Ans.}$$

The deformed element for the state of principal strain is shown in Fig. *b*.

Maximum In-Plane Shear Strain: The coordinates of point E represent ϵ_{avg} and $\frac{\gamma_{\substack{max \\ in\text{-}plane}}}{2}$. Thus

$$\frac{\gamma_{\substack{max \\ in\text{-}plane}}}{2} = R = 351.19(10^{-6})$$

$$\gamma_{\substack{max \\ in\text{-}plane}} = 702(10^{-6}) \qquad \textbf{Ans.}$$

Orientation of Maximum In-Plane Shear Strain: Referring to the geometry of the circle,

$$\tan 2\theta_s = \frac{250 - 50}{288.68} = 0.6928$$

$$\theta_s = 17.4^\circ \text{ (counterclockwise)} \qquad \textbf{Ans.}$$

The deformed element for the state of maximum in-plane shear strain is shown in Fig. *c*.

Ans:
$\epsilon_1 = 301(10^{-6})$, $\epsilon_2 = -401(10^{-6})$,
$\theta_{p2} = 27.6^\circ$ (clockwise),
$\gamma_{\substack{max \\ in\text{-}plane}} = 702(10^{-6})$, $\epsilon_{avg} = -50(10^{-6})$,
$\theta_s = 17.4^\circ$ (counterclockwise)

***10–28.** The 60° strain rosette is mounted on a beam. The following readings are obtained from each gauge: $\epsilon_a = 250(10^{-6})$, $\epsilon_b = -400(10^{-6})$, $\epsilon_c = 280(10^{-6})$. Determine (a) the in-plane principal strains and their orientation, and (b) the maximum in-plane shear strain and average normal strain. In each case show the deformed element due to these strains.

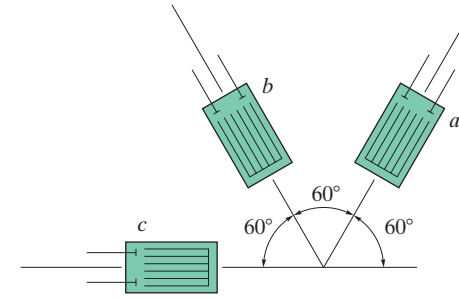

$\epsilon_a = 250(10^{-6})$ $\quad \epsilon_b = -400(10^{-6})$ $\quad \epsilon_c = 280(10^{-6})$

$\theta_a = 60°$ $\quad \theta_b = 120°$ $\quad \theta_c = 180°$

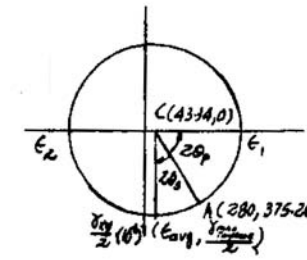

$$\epsilon_c = \epsilon_x \cos^2\theta_c + \epsilon_\gamma \sin^2\theta_c + \gamma_{xy}\sin\theta_c\cos\theta_c$$

$$280(10^{-6}) = \epsilon_x \cos^2 180° + \epsilon_y \sin^2 180° + \gamma_{xy}\sin 180° \cos 180°$$

$$\epsilon_x = 280(10^{-6})$$

$$\epsilon_a = \epsilon_x \cos^2\theta_a + \epsilon_y \sin^2\theta_a + \gamma_{xy}\sin\theta_a\cos\theta_a$$

$$250(10^{-6}) = \epsilon_x \cos^2 60° + \epsilon_y \sin^2 60° + \gamma_{xy}\sin 60° \cos 60°$$

$$250(10^{-6}) = 0.25\epsilon_x + 0.75\epsilon_y + 0.433\gamma_{xy} \qquad (1)$$

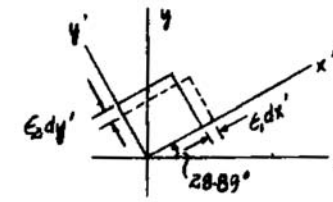

$$\epsilon_b = \epsilon_x \cos^2\theta_b + \epsilon_y \sin^2\theta_b + \gamma_{xy}\sin\theta_b\cos\theta_b$$

$$-400(10^{-6}) = \epsilon_x \cos^2 120° + \epsilon_y \sin^2 120° + \gamma_{xy}\sin 120° \cos 120°$$

$$-400(10^{-6}) = 0.25\epsilon_x + 0.75\epsilon_y - 0.433\gamma_{xy} \qquad (2)$$

Subtract Eq. (2) from Eq. (1)

$$650(10^{-6}) = 0.866\gamma_{xy}$$

$$\gamma_{xy} = 750.56(10^{-6})$$

$$\epsilon_y = -193.33(10^{-6})$$

$$\frac{\gamma_{xy}}{2} = 375.28(10^{-6})$$

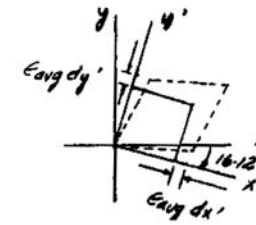

$A(280, 375.28)10^{-6}$ $\qquad C(43.34, 0)10^{-6}$

$$R = (\sqrt{(280 - 43.34)^2 + 375.28^2})10^{-6} = 443.67(10^{-6})$$

a)

$$\epsilon_1 = (43.34 + 443.67)10^{-6} = 487(10^{-6}) \qquad \textbf{Ans.}$$

$$\epsilon_2 = (43.34 - 443.67)10^{-6} = -400(10^{-6}) \qquad \textbf{Ans.}$$

$$\tan 2\theta_p = \frac{375.28}{280 - 43.34}$$

$2\theta_p = 57.76°$ $\qquad$ (Mohr's circle)

$\theta_p = 28.89°$ $\qquad$ (element)

10–28. Continued

b)

$\gamma_{\substack{\text{max}\\ \text{in-plane}}} = 2R = 2(443.67)(10^{-6}) = 887(10^{-6})$ **Ans.**

$\epsilon_{\text{avg}} = 43.3(10^{-6})$ **Ans.**

$2\theta_s = 90° - 2\theta_y = 32.24°$ (Mohr's circle)

$\theta_s = 16.12°$ (element)

10–30. For the case of plane stress, show that Hooke's law can be written as

$$\sigma_x = \frac{E}{(1-\nu^2)}(\epsilon_x + \nu\epsilon_y), \quad \sigma_y = \frac{E}{(1-\nu^2)}(\epsilon_y + \nu\epsilon_x)$$

Generalized Hooke's Law: For plane stress, $\sigma_z = 0$. Applying Eq. 10–18,

$$\epsilon_x = \frac{1}{E}\left(\sigma_x - \nu\sigma_y\right)$$

$$\nu E\epsilon_x = \left(\sigma_x - \nu\,\sigma_y\right)\nu$$

$$\nu E\epsilon_x = \nu\,\sigma_x - \nu^2\,\sigma_y \qquad (1)$$

$$\epsilon_y = \frac{1}{E}(\sigma_y - \nu\,\sigma_x)$$

$$E\,\epsilon_y = -\nu\,\sigma_x + \sigma_y \qquad (2)$$

Adding Eq. (1) and Eq.(2) yields.

$$\nu E\,\epsilon_x + E\,\epsilon_y = \sigma_y - \nu^2\,\sigma_y$$

$$\sigma_y = \frac{E}{1-\nu^2}\left(\nu\epsilon_x + \epsilon_y\right) \qquad \textbf{\textit{(Q.E.D.)}}$$

Substituting σ_y into Eq. (2)

$$E\,\epsilon_y = -\nu\sigma_x + \frac{E}{1-\nu^2}\left(\nu\,\epsilon_x + \epsilon_y\right)$$

$$\sigma_x = \frac{E\left(\nu\,\epsilon_x + \epsilon_y\right)}{\nu\,(1-\nu^2)} - \frac{E\epsilon_y}{\nu}$$

$$= \frac{E\nu\epsilon_x + E\epsilon_y - E\epsilon_y + E\epsilon_y\,\nu^2}{\nu(1-\nu^2)}$$

$$= \frac{E}{1-\nu^2}(\epsilon_x + \nu\,\epsilon_y) \qquad \textbf{\textit{(Q.E.D.)}}$$

10–31. Use Hooke's law, Eq. 10–18, to develop the strain-transformation equations, Eqs. 10–5 and 10–6, from the stress-transformation equations, Eqs. 9–1 and 9–2.

Stress Transformation Equations:

$$\sigma_{x'} = \frac{\sigma_x + \sigma_y}{2} + \frac{\sigma_x - \sigma_y}{2} \cos 2\theta + \tau_{xy} \sin 2\theta \tag{1}$$

$$\tau_{x'y'} = -\frac{\sigma_x - \sigma_y}{2} \sin 2\theta + \tau_{xy} \cos 2\theta \tag{2}$$

$$\sigma_{y'} = \frac{\sigma_x + \sigma_y}{2} - \frac{\sigma_x - \sigma_y}{2} \cos 2\theta - \tau_{xy} \sin 2\theta \tag{3}$$

Hooke's Law:

$$\epsilon_x = \frac{\sigma_x}{E} - \frac{\nu\, \sigma_y}{E} \tag{4}$$

$$\epsilon_y = \frac{-\nu\, \sigma_x}{E} + \frac{\sigma_y}{E} \tag{5}$$

$$\tau_{xy} = G\, \gamma_{xy} \tag{6}$$

$$G = \frac{E}{2(1 + \nu)} \tag{7}$$

From Eqs. (4) and (5)

$$\epsilon_x + \epsilon_y = \frac{(1 - \nu)(\sigma_x + \sigma_y)}{E} \tag{8}$$

$$\epsilon_x - \epsilon_y = \frac{(1 + \nu)(\sigma_x - \sigma_y)}{E} \tag{9}$$

From Eqs. (6) and (7)

$$\tau_{xy} = \frac{E}{2(1 + \nu)} \gamma_{xy} \tag{10}$$

From Eq. (4)

$$\epsilon_{x'} = \frac{\sigma_{x'}}{E} - \frac{\nu\, \sigma_{y'}}{E} \tag{11}$$

Substitute Eqs. (1) and (3) into Eq. (11)

$$\epsilon_{x'} = \frac{(1 - \nu)(\sigma_x + \sigma_y)}{2\,E} + \frac{(1 + \nu)(\sigma_x - \sigma_y)}{2\,E} \cos 2\theta + \frac{(1 + \nu)\tau_{xy} \sin 2\theta}{E} \tag{12}$$

By using Eqs. (8), (9) and (10) and substitute into Eq. (12),

$$\epsilon_{x'} = \frac{\epsilon_x + \epsilon_y}{2} + \frac{\epsilon_x - \epsilon_y}{2} \cos 2\theta + \frac{\gamma_{xy}}{2} \sin 2\theta \qquad \textbf{\textit{(Q.E.D.)}}$$

10–31. Continued

From Eq. (6).

$$\tau_{x'y'} = G\gamma_{x'y'} = \frac{E}{2(1+\nu)}\gamma_{x'y'} \tag{13}$$

Substitute Eqs. (13), (6) and (9) into Eq. (2),

$$\frac{E}{2(1+\nu)}\gamma_{x'y'} = -\frac{E(\epsilon_x - \epsilon_y)}{2(1+\nu)}\sin 2\theta + \frac{E}{2(1+\nu)}\gamma_{xy}\cos 2\theta$$

$$\frac{\gamma_{x'y'}}{2} = -\frac{(\epsilon_x - \epsilon_y)}{2}\sin 2\theta + \frac{\gamma_{xy}}{2}\cos 2\theta \qquad \textbf{\textit{(Q.E.D.)}}$$

***10–32.** The principal plane stresses and associated strains in a plane at a point are $\sigma_1 = 36$ ksi, $\sigma_2 = 16$ ksi, $\epsilon_1 = 1.02(10^{-3})$, $\epsilon_2 = 0.180(10^{-3})$. Determine the modulus of elasticity and Poisson's ratio.

$$\sigma_3 = 0$$

$$\epsilon_1 = \frac{1}{E}[\sigma_1 - v(\sigma_2 + \sigma_3)]$$

$$1.02(10^{-3}) = \frac{1}{E}[36 - v(16)]$$

$$1.02(10^{-3})E = 36 - 16v \qquad (1)$$

$$\epsilon_2 = \frac{1}{E}[\sigma_2 - v(\sigma_1 + \sigma_3)]$$

$$0.180(10^{-3}) = \frac{1}{E}[16 - v(36)]$$

$$0.180(10^{-3})E = 16 - 36v \qquad (2)$$

Solving Eqs. (1) and (2) yields:

$E = 30.7(10^3)$ ksi **Ans.**

$v = 0.291$ **Ans.**

10–33. A rod has a radius of 10 mm. If it is subjected to an axial load of 15 N such that the axial strain in the rod is $\epsilon_x = 2.75(10^{-6})$, determine the modulus of elasticity E and the change in its diameter. $\nu = 0.23$.

$$\sigma_x = \frac{15}{\pi(0.01)^2} = 47.746 \text{ kPa}, \qquad \sigma_y = 0, \qquad \sigma_z = 0$$

$$\epsilon_x = \frac{1}{E}[\sigma_x - \nu(\sigma_y + \sigma_z)]$$

$$2.75(10^{-6}) = \frac{1}{E}[47.746(10^3) - 0.23(0 + 0)]$$

$E = 17.4$ GPa **Ans.**

$$\epsilon_y = \epsilon_z = -\nu\epsilon_x = -0.23(2.75)(10^{-6}) = -0.632(10^{-6})$$

$\Delta d = 20(-0.632(10^{-6})) = -12.6(10^{-6})$ mm **Ans.**

Ans:
$E = 17.4$ GPa, $\Delta d = -12.6(10^{-6})$ mm

10–34. The polyvinyl chloride bar is subjected to an axial force of 900 lb. If it has the original dimensions shown determine the *change* in the angle θ after the load is applied. $E_{pvc} = 800(10^3)$ psi, $\nu_{pvc} = 0.20$.

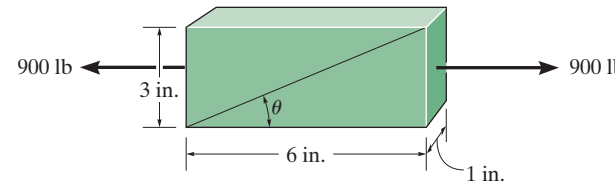

$$\sigma_x = \frac{900}{3(1)} = 300 \text{ psi}$$

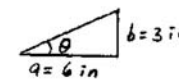

$$\sigma_y = 0 \qquad \sigma_z = 0$$

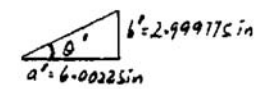

$$\epsilon_x = \frac{1}{E}[\sigma_x - \nu(\sigma_y + \sigma_z)]$$

$$= \frac{1}{800(10^3)}[300 - 0] = 0.375(10^{-3})$$

$$\epsilon_y = \frac{1}{E}[\sigma_y - \nu(\sigma_x + \sigma_z)]$$

$$= \frac{1}{800(10^3)}[0 - 0.2(300 + 0)] = -75(10^{-6})$$

$$a' = 6 + 6(0.375)(10^{-3}) = 6.00225 \text{ in.}$$

$$b' = 3 + 3(-75)(10^{-6}) = 2.999775 \text{ in.}$$

$$\theta = \tan^{-1}\left(\frac{3}{6}\right) = 26.56505118°$$

$$\theta' = \tan^{-1}\left(\frac{2.999775}{6.00225}\right) = 26.55474088°$$

$$\Delta\theta = \theta' - \theta = 26.55474088° - 26.56505118° = -0.0103°$$ **Ans.**

Ans:
$\Delta\theta = -0.0103°$

10–35. The polyvinyl chloride bar is subjected to an axial force of 900 lb. If it has the original dimensions shown determine the value of Poisson's ratio if the angle θ decreases by $\Delta\theta = 0.01°$ after the load is applied. $E_{pvc} = 800(10^3)$ psi.

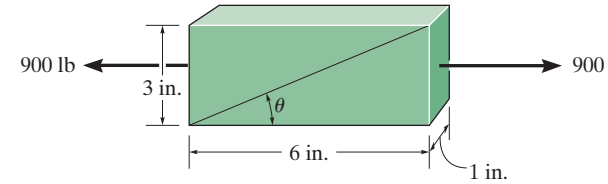

$$\sigma_x = \frac{900}{3(1)} = 300 \text{ psi} \qquad \sigma_y = 0 \qquad \sigma_z = 0$$

$$\epsilon_x = \frac{1}{E}[\sigma_x - \nu_{pvc}(\sigma_y + \sigma_z)]$$

$$= \frac{1}{800(10^3)}[300 - 0] = 0.375(10^{-3})$$

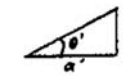

$$\epsilon_y = \frac{1}{E}[\sigma_y - \nu_{pvc}(\sigma_x + \sigma_z)]$$

$$= \frac{1}{800(10^3)}[0 - \nu_{pvc}(300 + 0)] = -0.375(10^{-3})\nu_{pvc}$$

$$a' = 6 + 6(0.375)(10^{-3}) = 6.00225 \text{ in.}$$

$$b' = 3 + 3(-0.375)(10^{-3})\nu_{pvc} = 3 - 1.125(10^{-3})\nu_{pvc}$$

$$\theta = \tan^{-1}\left(\frac{3}{6}\right) = 26.56505118°$$

$$\theta' = 26.56505118° - 0.01° = 26.55505118°$$

$$\tan\theta' = 0.49978185 = \frac{3 - 1.125(10^{-3})\nu_{pvc}}{6.00225}$$

$$\nu_{pvc} = 0.164$$ **Ans.**

Ans:
$\nu_{pvc} = 0.164$

***10–36.** The spherical pressure vessel has an inner diameter of 2 m and a thickness of 10 mm. A strain gauge having a length of 20 mm is attached to it, and it is observed to increase in length by 0.012 mm when the vessel is pressurized. Determine the pressure causing this deformation, and find the maximum in-plane shear stress, and the absolute maximum shear stress at a point on the outer surface of the vessel. The material is steel, for which $E_{st} = 200$ GPa and $\nu_{st} = 0.3$.

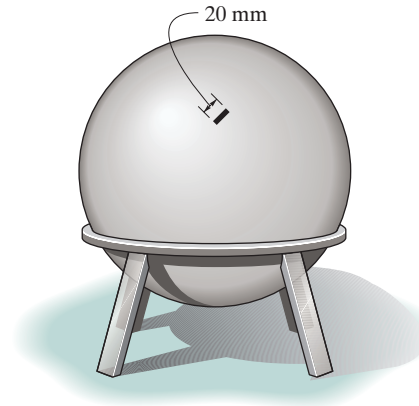

Normal Stresses: Since $\frac{r}{t} = \frac{1000}{10} = 100 > 10$, the *thin wall* analysis is valid to determine the normal stress in the wall of the spherical vessel. This is a plane stress problem where $\sigma_{min} = 0$ since there is no load acting on the outer surface of the wall.

$$\sigma_{max} = \sigma_{lat} = \frac{pr}{2t} = \frac{p(1000)}{2(10)} = 50.0p \qquad \textbf{(1)}$$

Normal Strains: Applying the generalized Hooke's Law with

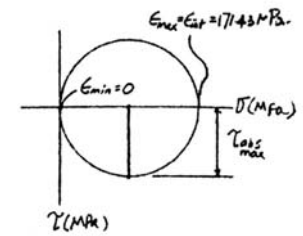

$$\epsilon_{max} = \frac{0.012}{20} = 0.600\left(10^{-3}\right) \text{ mm/mm}$$

$$\epsilon_{max} = \frac{1}{E}\left[\sigma_{max} - \nu\left(\sigma_{lat} + \sigma_{min}\right)\right]$$

$$0.600\left(10^{-3}\right) = \frac{1}{200(10^9)}\left[50.0p - 0.3(50.0p + 0)\right]$$

$$p = 3.4286 \text{ MPa} = 3.43 \text{ MPa} \qquad \textbf{Ans.}$$

From Eq. (1) $\sigma_{max} = \sigma_{lat} = 50.0(3.4286) = 171.43$ MPa

Maximum In-Plane Shear (Sphere's Surface): Mohr's circle is simply a dot. As the result, the state of stress is the same consisting of two normal stresses with zero shear stress regardless of the orientation of the element.

$$\tau_{\substack{max \\ in\text{-}plane}} = 0 \qquad \textbf{Ans.}$$

Absolute Maximum Shear Stress:

$$\tau_{\substack{abs \\ max}} = \frac{\sigma_{max} - \sigma_{min}}{2} = \frac{171.43 - 0}{2} = 85.7 \text{ MPa} \qquad \textbf{Ans.}$$

10–37. Determine the bulk modulus for each of the following materials: (a) rubber, $E_r = 0.4$ ksi, $\nu_r = 0.48$, and (b) glass, $E_g = 8(10^3)$ ksi, $\nu_g = 0.24$.

a) For rubber:

$$k_r = \frac{E_r}{3\,(1 - 2\,\nu_r)} = \frac{0.4}{3[1 - 2(0.48)]} = 3.33 \text{ ksi}$$ **Ans.**

b) For glass:

$$k_g = \frac{E_g}{3(1 - 2\,\nu_g)} = \frac{8(10^3)}{3[1 - 2(0.24)]} = 5.13\,(10^3) \text{ ksi}$$ **Ans.**

Ans:
(a) $k_r = 3.33$ ksi,
(b) $k_g = 5.13(10^3)$ ksi

10–38. The strain gauge is placed on the surface of a thin-walled steel boiler as shown. If it is 0.5 in. long, determine the pressure in the boiler when the gauge elongates $0.2(10^{-3})$ in. The boiler has a thickness of 0.5 in. and inner diameter of 60 in. Also, determine the maximum x, y in-plane shear strain in the material. $E_{st} = 29(10^3)$ ksi, $\nu_{st} = 0.3$.

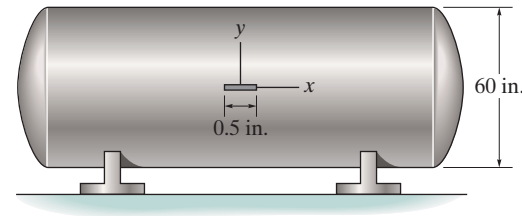

$$\epsilon_2 = \frac{0.2(10^{-3})}{0.5} = 400(10^{-6})$$

$$\epsilon_2 = \frac{1}{E}[\sigma_2 - \nu(\sigma_1 + \sigma_3)]$$

where, $\sigma_2 = \frac{1}{2}\sigma_1 \qquad \sigma_3 = 0$

$$400(10^{-6}) = \frac{1}{29(10^3)}\left[\frac{1}{2}\sigma_1 - 0.3\sigma_1\right]$$

$$\sigma_1 = 58 \text{ ksi}$$

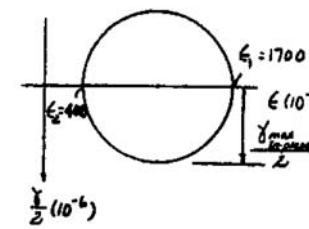

Thus,

$$p = \frac{\sigma_1 t}{r} = \frac{58(0.5)}{30} = 0.967 \text{ ksi} \qquad \textbf{Ans.}$$

$$\epsilon_1 = \frac{1}{E}[\sigma_1 - \nu(\sigma_2 + \sigma_3)]$$

where, $\sigma_3 = 0$ and $\sigma_2 = \frac{58}{2} = 29$ ksi

$$\epsilon_1 = \frac{1}{29(10^3)}[58 - 0.3(29 + 0)] = 1700(10^{-6})$$

$$\frac{\gamma_{\substack{\text{max}\\\text{in-plane}}}}{2} = \frac{\epsilon_1 - \epsilon_2}{2}$$

$$\gamma_{\substack{\text{max}\\\text{in-plane}}} = (1700 - 400)(10^{-6}) = 1.30(10^{-3}) \qquad \textbf{Ans.}$$

Ans:
$p = 0.967$ ksi, $\gamma_{\substack{\text{max}\\\text{in-plane}}} = 1.30(10^{-3})$

10–39. The strain in the x direction at point A on the A-36 structural-steel beam is measured and found to be $\epsilon_x = 100(10^{-6})$. Determine the applied load P. What is the shear strain γ_{xy} at point A?

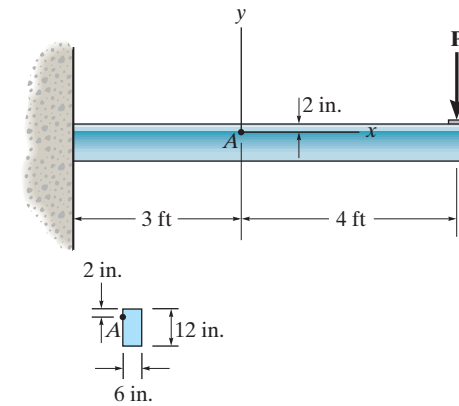

Section Properties:

$$I = \frac{1}{12}(6)(12^3) = 864 \text{ in}^4$$

$$Q_A = \bar{y}'A' = 5(6)(2) = 60 \text{ in}^3$$

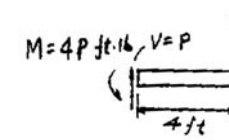

Normal Stress:

$$\sigma = E\,\epsilon_x = 29(10^3)(100)(10^{-6}) = 2.90 \text{ ksi}$$

$$\sigma = \frac{My}{I}; \qquad 2.90(10^3) = \frac{4P(12)(4)}{864}$$

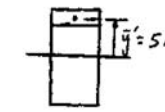

$$P = 13050 \text{ lb} = 13.0 \text{ kip}$$ **Ans.**

$$\tau_{xy} = \frac{VQ}{It} = \frac{13.05(10^3)(60)}{864(6)} = 151.04 \text{ psi}$$

$$\gamma_{xy} = \frac{\tau_{xy}}{G} = \frac{151.04}{11.0(10^6)} = -13.7(10^{-6})$$ **Ans.**

Ans:
$P = 13.0$ kip, $\gamma_{xy} = -13.7(10^{-6})$

***10–40.** The strain in the x direction at point A on the A-36 structural-steel beam is measured and found to be $\epsilon_x = 200(10^{-6})$. Determine the applied load P. What is the shear strain γ_{xy} at point A?

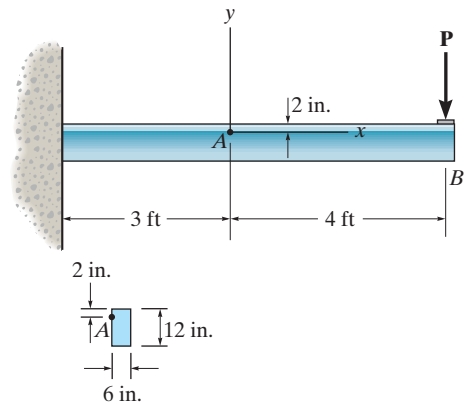

Section Properties:

$Q_A = \bar{y}'A' = 5(6)(2) = 60 \text{ in}^3$

$I = \dfrac{1}{12}(6)(12^3) = 864 \text{ in}^4$

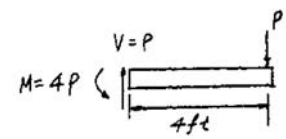

Normal Stress:

$\sigma = E\,\epsilon_x = 29(10^3)(200)(10^{-6}) = 5.80 \text{ ksi}$

$\sigma = \dfrac{My}{I}; \qquad 5.80(10^3) = \dfrac{4P(12)(4)}{864}$

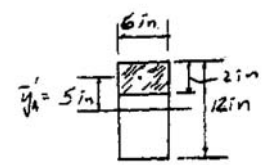

$P = 26.1 \text{ kip}$ **Ans.**

Shear Stress and Shear Strain:

$\tau_A = \dfrac{VQ}{It} = \dfrac{26.1(60)}{864(6)} = 0.302 \text{ ksi}$

$\gamma_{xy} = \dfrac{\tau_{xy}}{G} = \dfrac{0.302}{11.0(10^3)} = -27.5(10^{-6}) \text{ rad}$ **Ans.**

10–41. If a load of $P = 3$ kip is applied to the A-36 structural-steel beam, determine the strain ϵ_x and γ_{xy} at point A.

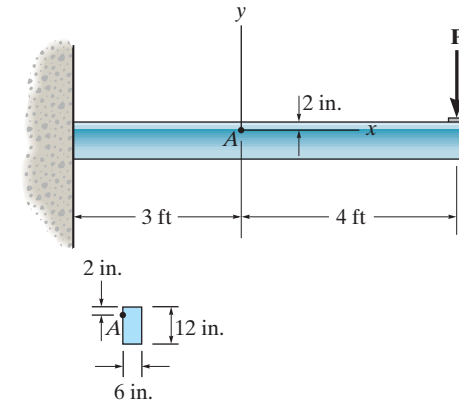

Section Properties:

$$Q_A = \bar{y}'A' = 2(6)(5) = 60 \text{ in}^3$$

$$I = \frac{1}{12}(6)(12^3) = 864 \text{ in}^4$$

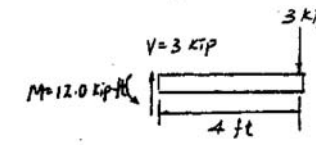

Normal Stress and Strain:

$$\sigma_A = \frac{My}{I} = \frac{12.0(10^3)(12)(4)}{864} = 666.7 \text{ psi}$$

$$\epsilon_x = \frac{\sigma_x}{E} = \frac{666.7}{29(10^6)} = 23.0(10^{-6})$$ **Ans.**

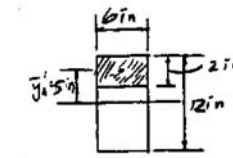

Shear Stress and Shear Strain:

$$\tau_A = \frac{VQ}{It} = \frac{3(10^3)(60)}{864(6)} = 34.72 \text{ psi}$$

$$\gamma_{xy} = \frac{\tau_{xy}}{G} = \frac{34.72}{11.0(10^6)} = -3.16(10^{-6})$$ **Ans.**

Ans:
$\epsilon_x = 23.0(10^{-6}), \gamma_{xy} = -3.16(10^{-6})$

10–42. The principal stresses at a point are shown in the figure. If the material is aluminum for which $E_{al} = 10(10^3)$ ksi and $\nu_{al} = 0.33$, determine the principal strains.

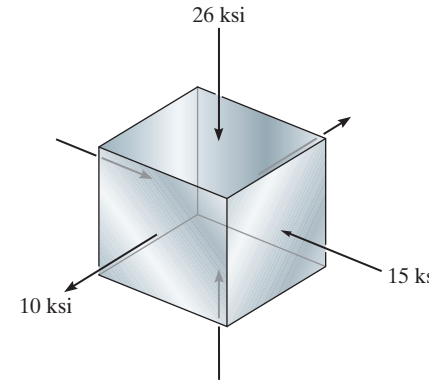

$$\epsilon_x = \frac{1}{E}(\sigma_x - \nu(\sigma_y + \sigma_z)) = \frac{1}{10(10^3)}(10 - 0.33(-15 - 26)) = 2.35(10^{-3}) \quad \textbf{Ans.}$$

$$\epsilon_y = \frac{1}{E}(\sigma_y - \nu(\sigma_x + \sigma_z)) = \frac{1}{10(10^3)}(-15 - 0.33)(10 - 26)) = -0.972(10^{-3}) \quad \textbf{Ans.}$$

$$\epsilon_z = \frac{1}{E}(\sigma_z - \nu(\sigma_x + \sigma_y)) = \frac{1}{10(10^3)}(-26 - 0.33(10 - 15)) = -2.44(10^{-3}) \quad \textbf{Ans.}$$

Ans:
$\epsilon_x = 2.35(10^{-3})$, $\epsilon_y = -0.972(10^{-3})$,
$\epsilon_z = -2.44(10^{-3})$

10–43. A strain gauge a is attached in the longitudinal direction (x axis) on the surface of the gas tank. When the tank is pressurized, the strain gauge gives a reading of $\epsilon_a = 100(10^{-6})$. Determine the pressure p in the tank. The tank has an inner diameter of 1.5 m and wall thickness of 25 mm. It is made of steel having a modulus of elasticity $E = 200$ GPa and Poisson's ratio $\nu = \frac{1}{3}$.

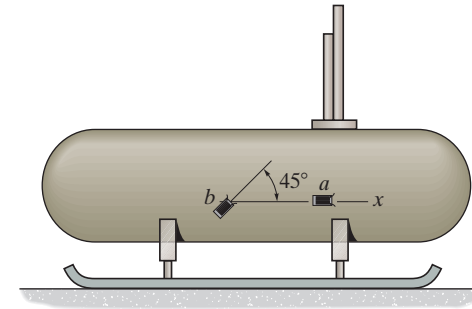

Normal Strain: With $\theta_a = 0$, we have

$$\epsilon_a = \epsilon_x \cos^2 \theta_a + \epsilon_y \sin^2 \theta_a + \gamma_{xy} \sin \theta_a \cos \theta_a$$

$$100(10^{-6}) = \epsilon_x \cos^2 0° + \epsilon_y \sin^2 0° + \gamma_{xy} \sin 0° \cos 0°$$

$$\epsilon_x = 100(10^{-6})$$

Normal Stress: Since $\frac{r}{t} = \frac{0.75}{0.025} = 30 > 10$, thin-wall analysis can be used.

$$\sigma_y = \sigma_1 = \frac{pr}{t} = \frac{p(0.75)}{0.025} = 30\,p$$

$$\sigma_x = \sigma_2 = \frac{pr}{2t} = \frac{p(0.75)}{2(0.025)} = 15\,p$$

Generalized Hooke's Law: This is a case of plane stress. Thus, $\nu_z = 0$.

$$\epsilon_x = \frac{1}{E}\left[\sigma_x - \nu(\sigma_y + \sigma_z)\right]$$

$$100(10^{-6}) = \frac{1}{200(10^9)}\left[15p - \frac{1}{3}(30p + 0)\right]$$

$$p = 4(10^6)\text{N/m}^2 = 4\text{ MPa}$$ **Ans.**

Ans:
$p = 4$ MPa

10–44. Strain gauge b is attached to the surface of the gas tank at an angle of 45° with x axis as shown. When the tank is pressurized, the strain gauge gives a reading of $\epsilon_b = 250(10^{-6})$. Determine the pressure in the tank. The tank has an inner diameter of 1.5 m and wall thickness of 25 mm. It is made of steel having a modulus of elasticity $E = 200$ GPa and Poisson's ratio $\nu = \frac{1}{3}$.

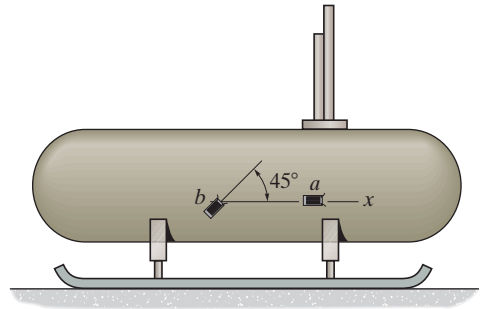

Normal Stress: Since $\frac{r}{t} = \frac{0.75}{0.025} = 30 > 10$, thin-wall analysis can be used.

$$\sigma_y = \sigma_1 = \frac{pr}{t} = \frac{p(0.75)}{0.025} = 30\,p$$

$$\sigma_x = \sigma_2 = \frac{pr}{2t} = \frac{p(0.75)}{2(0.025)} = 15\,p$$

Normal Strain: Since no shear force acts along the x and y axes, $\gamma_{xy} = 0$. With $\theta_b = 45$, we have

$$\epsilon_b = \epsilon_x \cos^2\theta_b + \epsilon_y \sin^2\theta_b + \gamma_{xy}\sin\theta_b\cos\theta_b$$

$$250(10^{-6}) = \epsilon_x \cos^2 45° + \epsilon_y \sin^2 45° + 0$$

$$\epsilon_x + \epsilon_y = 500(10^{-6}) \qquad (1)$$

Generalized Hooke's Law: This is a case of plane stress. Thus, $\nu_z = 0$. We have

$$\epsilon_x = \frac{1}{E}\left[\sigma_x - \nu(\sigma_y + \sigma_z)\right]$$

$$\epsilon_x = \frac{1}{200(10^9)}\left[15p - \frac{1}{3}(30p + 0)\right]$$

$$\epsilon_x = \frac{5p}{200(10^9)} \qquad (2)$$

$$\epsilon_y = \frac{1}{E}\left[\sigma_y - \nu(\sigma_x + \sigma_z)\right]$$

$$\epsilon_y = \frac{1}{200(10^9)}\left[30p - \frac{1}{3}(15p + 0)\right]$$

$$\epsilon_y = \frac{25p}{200(10^9)} \qquad (3)$$

Substituting Eqs. (2) and (3) into Eq. (1), we obtain

$$\frac{5p}{200(10^9)} + \frac{25p}{200(10^9)} = 500(10^{-6})$$

$$p = 3.333(10^6)\ \text{N/m}^2 = 3.33\ \text{MPa} \qquad \textbf{Ans.}$$

10–45. A material is subjected to principal stresses σ_x and σ_y. Determine the orientation θ of a strain gauge placed at the point so that its reading of normal strain responds only to σ_y and not σ_x. The material constants are E and ν.

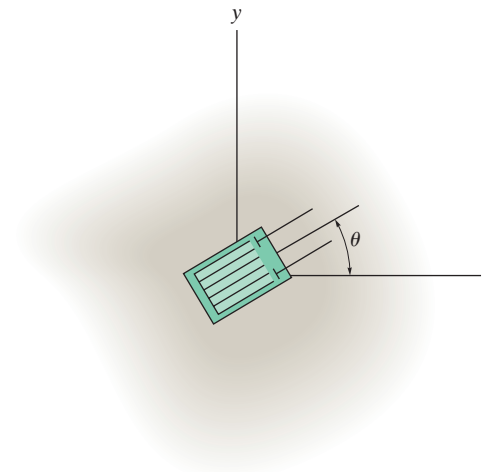

$$\sigma_x = \frac{\sigma_x + \sigma_y}{2} + \frac{\sigma_x - \sigma_y}{2}\cos 2\theta + \tau_{xy}\sin 2\theta$$

Since $\tau_{xy} = 0$,

$$\sigma_n = \frac{\sigma_x + \sigma_y}{2} + \frac{\sigma_x - \sigma_y}{2}\cos 2\theta$$

$$\cos 2\theta = 2\cos^2\theta - 1$$

$$\sigma_n = \frac{\sigma_x}{2} + \frac{\sigma_y}{2} + (\sigma_x - \sigma_y)\cos^2\theta - \frac{\sigma_x}{2} + \frac{\sigma_y}{2}$$

$$= \sigma_y(1 - \cos^2\theta) + \sigma_x\cos^2\theta$$

$$= \sigma_x\cos^2\theta + \sigma_y\sin^2\theta$$

$$\sigma_{n+90^\circ} = \frac{\sigma_x + \sigma_y}{2} - \frac{\sigma_x - \sigma_y}{2}\cos 2\theta$$

$$= \frac{\sigma_x}{2} + \frac{\sigma_y}{2} - \left(\frac{\sigma_x - \sigma_y}{2}\right)(2\cos^2\theta - 1)$$

$$= \frac{\sigma_x}{2} + \frac{\sigma_y}{2} - (\sigma_x - \sigma_y)\cos^2\theta + \frac{\sigma_x}{2} - \frac{\sigma_y}{2}$$

$$= \sigma_x(1 - \cos^2\theta) + \sigma_y\cos^2\theta$$

$$= \sigma_x\sin^2\theta + \sigma_y\cos^2\theta$$

$$\epsilon_n = \frac{1}{E}(\sigma_n - \nu\,\sigma_{n+90^\circ})$$

$$= \frac{1}{E}(\sigma_x\cos^2\theta + \sigma_y\sin^2\theta - \nu\,\sigma_x\sin^2\theta - \nu\,\sigma_y\cos^2\theta)$$

If ϵ_n is to be independent of σ_x, then

$$\cos^2\theta - \nu\sin^2\theta = 0 \qquad \text{or} \qquad \tan^2\theta = 1/\nu$$

$$\theta = \tan^{-1}\left(\frac{1}{\sqrt{\nu}}\right)$$ **Ans.**

Ans:
$\theta = \tan^{-1}\left(\frac{1}{\sqrt{\nu}}\right)$

10–46. The principal strains in a plane, measured experimentally at a point on the aluminum fuselage of a jet aircraft, are $\epsilon_1 = 630(10^{-6})$ and $\epsilon_2 = 350(10^{-6})$. If this is a case of plane stress, determine the associated principal stresses at the point in the same plane. $E_{al} = 10(10^3)$ ksi and $\nu_{al} = 0.33$.

Normal Stresses: For plane stress, $\sigma_3 = 0$.

Normal Strains: Applying the generalized Hooke's Law.

$$\epsilon_1 = \frac{1}{E}\left[\sigma_1 - \nu\,(\sigma_2 + \sigma_3)\right]$$

$$630\left(10^{-6}\right) = \frac{1}{10(10^3)}\left[\sigma_1 - 0.33(\sigma_2 + 0)\right]$$

$$6.30 = \sigma_1 - 0.33\sigma_2 \qquad [1]$$

$$\epsilon_2 = \frac{1}{E}\left[\sigma_2 - \nu\,(\sigma_1 + \sigma_3)\right]$$

$$350\left(10^{-6}\right) = \frac{1}{10(10^3)}\left[\sigma_2 - 0.33(\sigma_1 + 0)\right]$$

$$3.50 = \sigma_2 - 0.33\sigma_1 \qquad [2]$$

Solving Eqs.[1] and [2] yields:

$$\sigma_1 = 8.37 \text{ ksi} \qquad \sigma_2 = 6.26 \text{ ksi} \qquad \textbf{Ans.}$$

Ans:
$\sigma_1 = 8.37$ ksi, $\sigma_2 = 6.26$ ksi

10–47. The principal stresses at a point are shown in the figure. If the material is aluminum for which $E_{al} = 10(10^3)$ ksi and $\nu_{al} = 0.33$, determine the principal strains.

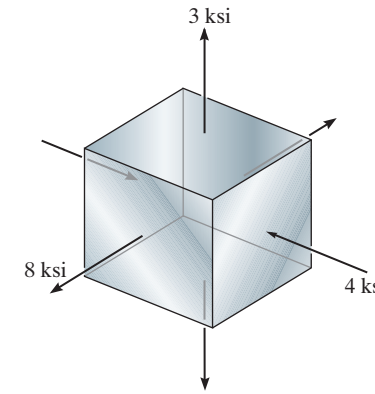

$$\epsilon_1 = \frac{1}{E}\left[\sigma_1 - \nu(\sigma_2 + \sigma_3)\right] = \frac{1}{10(10^3)}\left\{8 - 0.33\left[3 + (-4)\right]\right\} = 833\,(10^{-6})$$

$$\epsilon_2 = \frac{1}{E}\left[\sigma_2 - \nu(\sigma_1 + \sigma_3)\right] = \frac{1}{10(10^3)}\left\{3 - 0.33\left[8 + (-4)\right]\right\} = 168\,(10^{-6})$$

$$\epsilon_3 = \frac{1}{E}\left[\sigma_3 - \nu(\sigma_1 + \sigma_2)\right] = \frac{1}{10(10^3)}\left[-4 - 0.33(8 + 3)\right] = -763\,(10^{-6})$$

Using these results,

$\epsilon_1 = 833(10^{-6})$ $\quad \epsilon_2 = 168(10^{-6})$ $\quad \epsilon_3 = -763(10^{-6})$ **Ans.**

Ans:
$\epsilon_1 = 833(10^{-6})$, $\epsilon_2 = 168(10^{-6})$,
$\epsilon_3 = -763(10^{-6})$

***10–48.** The 6061-T6 aluminum alloy plate fits snugly into the rigid constraint. Determine the normal stresses σ_x and σ_y developed in the plate if the temperature is increased by $\Delta T = 50°\text{C}$. To solve, add the thermal strain $\alpha\Delta T$ to the equations for Hooke's Law.

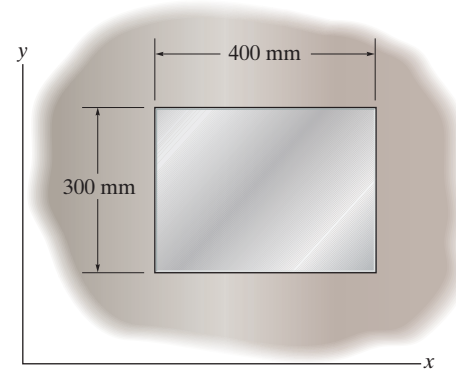

Generalized Hooke's Law: Since the sides of the aluminum plate are confined in the rigid constraint along the x and y directions, $\epsilon_x = \epsilon_y = 0$. However, the plate is allowed to have free expansion along the z direction. Thus, $\sigma_z = 0$. With the additional thermal strain term, we have

$$\epsilon_x = \frac{1}{E}\left[\sigma_x - \nu\left(\sigma_y + \sigma_z\right)\right] + \alpha\Delta T$$

$$0 = \frac{1}{68.9\left(10^9\right)}\left[\sigma_x - 0.35\left(\sigma_y + 0\right)\right] + 24\left(10^{-6}\right)(50)$$

$$\sigma_x - 0.35\sigma_y = -82.68\left(10^6\right) \qquad (1)$$

$$\epsilon_y = \frac{1}{E}\left[\sigma_y - \nu\left(\sigma_x + \sigma_z\right)\right] + \alpha\Delta T$$

$$0 = \frac{1}{68.9\left(10^9\right)}\left[\sigma_y - 0.35(\sigma_x + 0)\right] + 24\left(10^{-6}\right)(50)$$

$$\sigma_y - 0.35\sigma_x = -82.68\left(10^6\right) \qquad (2)$$

Solving Eqs. (1) and (2),

$$\sigma_x = \sigma_y = -127.2 \text{ MPa} = 127 \text{ MPa (C)} \qquad \textbf{Ans.}$$

Since $\sigma_x = \sigma_y$ and $\sigma_y < \sigma_Y$, the above results are valid.

10–49. Initially, gaps between the A-36 steel plate and the rigid constraint are as shown. Determine the normal stresses σ_x and σ_y developed in the plate if the temperature is increased by $\Delta T = 100°\text{F}$. To solve, add the thermal strain $\alpha\Delta T$ to the equations for Hooke's Law.

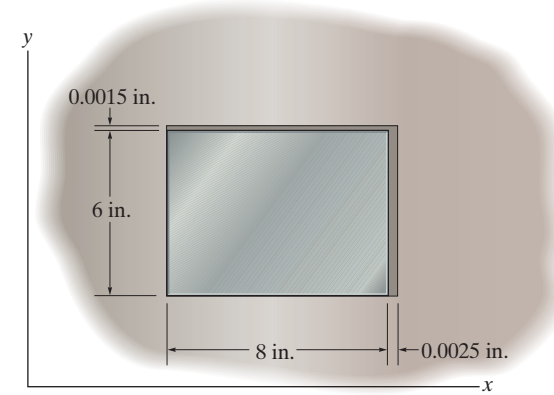

Generalized Hooke's Law: Since there are gaps between the sides of the plate and the rigid constraint, the plate is allowed to expand before it comes in contact with the constraint. Thus, $\epsilon_x = \dfrac{\delta_x}{L_x} = \dfrac{0.0025}{8} = 0.3125\left(10^{-3}\right)$ and $\epsilon_y = \dfrac{\delta_y}{L_y} = \dfrac{0.0015}{6} = 0.25\left(10^{-3}\right)$. However, the plate is allowed to have free expansion along the z direction. Thus, $\sigma_z = 0$. With the additional thermal strain term, we have

$$\epsilon_x = \frac{1}{E}\left[\sigma_x - \nu\left(\sigma_y + \sigma_z\right)\right] + \alpha\Delta T$$

$$0.3125\left(10^{-3}\right) = \frac{1}{29.0\left(10^3\right)}\left[\sigma_x - 0.32\left(\sigma_y + 0\right)\right] + 6.60\left(10^{-6}\right)(100)$$

$$\sigma_x - 0.32\sigma_y = -10.0775 \qquad (1)$$

$$\epsilon_y = \frac{1}{E}\left[\sigma_y - \nu\left(\sigma_x + \sigma_z\right)\right] + \alpha\Delta T$$

$$0.25\left(10^{-3}\right) = \frac{1}{29.0\left(10^3\right)}\left[\sigma_y - 0.32(\sigma_x + 0)\right] + 6.60\left(10^{-6}\right)(100)$$

$$\sigma_y - 0.32\sigma_x = -11.89 \qquad (2)$$

Solving Eqs. (1) and (2),

$\sigma_x = -15.5 \text{ ksi} = 15.5 \text{ ksi (C)}$ **Ans.**

$\sigma_y = -16.8 \text{ ksi} = 16.8 \text{ ksi (C)}$ **Ans.**

Since $\sigma_x < \sigma_Y$ and $\sigma_y < \sigma_Y$, the above results are valid.

Ans:
$\sigma_x = 15.5$ ksi(C), $\sigma_y = 16.8$ ksi(C)

10–50. The steel shaft has a radius of 15 mm. Determine the torque T in the shaft if the two strain gauges, attached to the surface of the shaft, report strains of $\epsilon_{x'} = -80(10^{-6})$ and $\epsilon_{y'} = 80(10^{-6})$. Also, compute the strains acting in the x and y directions. $E_{st} = 200$ GPa, $\nu_{st} = 0.3$.

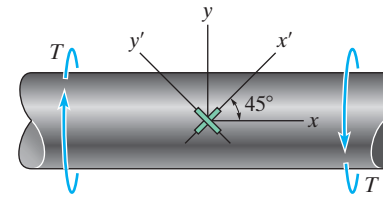

$\epsilon_{x'} = -80(10^{-6}) \qquad \epsilon_{y'} = 80(10^{-6})$

Pure shear $\epsilon_x = \epsilon_y = 0$ **Ans.**

$\epsilon_{x'} = \epsilon_x \cos^2\theta + \epsilon_y \sin^2\theta + \gamma_{xy} \sin\theta \cos\theta$

$\theta = 45°$

$-80(10^{-6}) = 0 + 0 + \gamma_{xy} \sin 45° \cos 45°$

$\gamma_{xy} = -160(10^{-6})$ **Ans.**

Also, $\theta = 135°$

$80(10^{-6}) = 0 + 0 + \gamma \sin 135° \cos 135°$

$\gamma_{xy} = -160(10^{-6})$

$$G = \frac{E}{2(1+\nu)} = \frac{200(10^9)}{2(1+0.3)} = 76.923(10^9)$$

$\tau = G\gamma = 76.923(10^9)(160)(10^{-6}) = 12.308(10^6)$ Pa

$$T = \frac{\tau J}{c} = \frac{12.308(10^6)\left(\frac{\pi}{2}\right)(0.015)^4}{0.015} = 65.2 \text{ N}\cdot\text{m}$$ **Ans.**

Ans:
$\epsilon_x = \epsilon_y = 0, \gamma_{xy} = -160(10^{-6}), T = 65.2 \text{ N}\cdot\text{m}$

10–51. The shaft has a radius of 15 mm and is made of L2 tool steel. Determine the strains in the x' and y' direction if a torque $T = 2\ \text{kN}\cdot\text{m}$ is applied to the shaft.

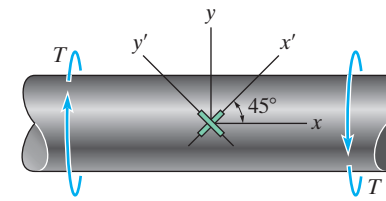

$$\tau = \frac{Tc}{J} = \frac{2(10^3)(0.015)}{\frac{\pi}{2}(0.015^4)} = 377.26\ \text{MPa}$$

Stress-Strain Relationship:

$$\gamma_{xy} = \frac{\tau_{xy}}{G} = -\frac{377.26(10^6)}{75.0(10^9)} = -5.030(10^{-3})\ \text{rad}$$

This is a pure shear case, therefore,

$$\epsilon_x = \epsilon_y = 0$$

Applying Eq. 10–15,

$$\epsilon_{x'} = \epsilon_x \cos^2\theta_a + \epsilon_y \sin^2\theta_a + \gamma_{xy}\sin\theta_a\cos\theta_a$$

Here $\theta_a = 45°$

$$\epsilon_{x'} = 0 + 0 - 5.030(10^{-3})\sin 45°\cos 45° = -2.52(10^{-3})$$

$\epsilon_{x'} = -2.52(10^{-3})$ **Ans.**

$\epsilon_{y'} = 2.52(10^{-3})$ **Ans.**

Ans:
$\epsilon_{x'} = -2.52(10^{-3})$, $\epsilon_{y'} = 2.52(10^{-3})$

***10–52.** The metal block is fitted between the fixed supports. If the glued joint can resist a maximum shear stress of $\tau_{\text{allow}} = 2$ ksi, determine the temperature rise that will cause the joint to fail. Take $E = 10(10^3)$ ksi, $\nu = 0.2$, and $\alpha = 6.0(10^{-6})/°\text{F}$. *Hint:* Use Eq. 10–18 with an additional strain term of $\alpha\Delta T$ (Eq. 4–4).

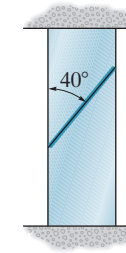

Normal Strain: Since the aluminum is confined in the y direction by the rigid supports, then $\epsilon_y = 0$ and $\sigma_x = \sigma_z = 0$. Applying the generalized Hooke's Law with the additional thermal strain,

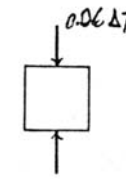

$$\epsilon_y = \frac{1}{E}\left[\sigma_y - \nu(\sigma_x + \sigma_z)\right] + \alpha\Delta T$$

$$0 = \frac{1}{10.0(10^3)}\left[\sigma_y - 0.2(0 + 0)\right] + 6.0\left(10^{-6}\right)(\Delta T)$$

$$\sigma_y = -0.06\Delta T$$

Construction of the Circle: In accordance with the sign convention. $\sigma_x = 0$, $\sigma_y = -0.06\Delta T$ and $\tau_{xy} = 0$. Hence.

$$\sigma_{\text{avg}} = \frac{\sigma_x + \sigma_y}{2} = \frac{0 + (-0.06\Delta T)}{2} = -0.03\Delta T$$

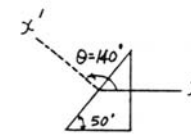

The coordinates for reference points A and C are $A\ (0, 0)$ and $C(-0.03\Delta T, 0)$.

The radius of the circle is $R = \sqrt{(0 - 0.03\Delta T)^2 + 0} = 0.03\Delta T$

Stress on the inclined plane: The shear stress components $\tau_{x'y'}$, are represented by the coordinates of point P on the circle.

$$\tau_{x'y'} = 0.03\Delta T \sin 80° = 0.02954\Delta T$$

Allowable Shear Stress:

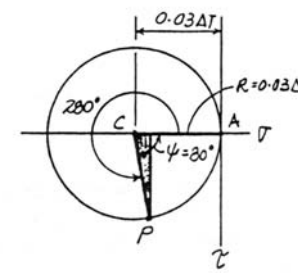

$$\tau_{\text{allow}} = \tau_{x'y'}$$

$$2 = 0.02954\Delta T$$

$$\Delta T = 67.7\ °\text{F} \qquad \textbf{Ans.}$$

10–53. Air is pumped into the steel thin-walled pressure vessel at C. If the ends of the vessel are closed using two pistons connected by a rod AB, determine the increase in the diameter of the pressure vessel when the internal gauge pressure is 5 MPa. Also, what is the tensile stress in rod AB if it has a diameter of 100 mm? The inner radius of the vessel is 400 mm, and its thickness is 10 mm. $E_{st} = 200$ GPa and $\nu_{st} = 0.3$.

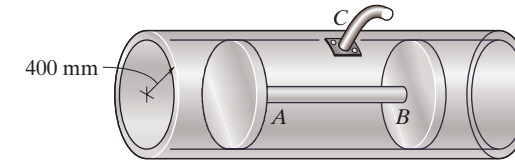

Circumferential Stress:

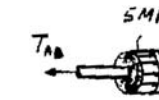

$$\sigma = \frac{p\,r}{t} = \frac{5(400)}{10} = 200 \text{ MPa}$$

Note: longitudinal and radial stresses are zero.

Circumferential Strain:

$$\epsilon = \frac{\sigma}{E} = \frac{200(10^6)}{200(10^9)} = 1.0(10^{-3})$$

$$\Delta d = \epsilon\, d = 1.0(10^{-3})(800) = 0.800 \text{ mm}$$ **Ans.**

For rod AB:

$$\overset{+}{\leftarrow} \Sigma F_x = 0; \qquad T_{AB} - 5(10^6)\left(\frac{\pi}{4}\right)(0.8^2 - 0.1^2) = 0$$

$$T_{AB} = 2474 \text{ kN}$$

$$\sigma_{AB} = \frac{T_{AB}}{A_{AB}} = \frac{2474(10^3)}{\frac{\pi}{4}(0.1^2)} = 315 \text{ MPa}$$ **Ans.**

Ans:
$\Delta d = 0.800$ mm, $\sigma_{AB} = 315$ MPa

10–54. Determine the increase in the diameter of the pressure vessel in Prob. 10–53 if the pistons are replaced by walls connected to the ends of the vessel.

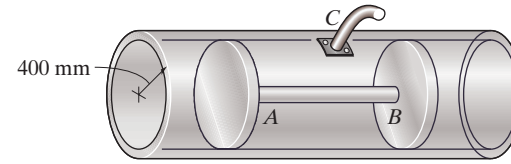

Principal Stress:

$$\sigma_1 = \frac{p\,r}{t} = \frac{5(400)}{10} = 200 \text{ MPa}; \qquad \sigma_3 = 0$$

$$\sigma_2 = \frac{1}{2}\,\sigma_1 = 100 \text{ MPa}$$

Circumferential Strain:

$$\epsilon_1 = \frac{1}{E}\left[\sigma_1 - \nu(\sigma_2 + \sigma_3)\right] = \frac{1}{200(10^9)}\left[200(10^6) - 0.3\{100(10^6) + 0\}\right]$$

$$= 0.85(10^{-3})$$

$$\Delta d = \epsilon_1\, d = 0.85(10^{-3})(800) = 0.680 \text{ mm}$$ **Ans.**

Ans:
$\Delta d = 0.680$ mm

10–55. A thin-walled spherical pressure vessel having an inner radius r and thickness t is subjected to an internal pressure p. Show that the increase in the volume within the vessel is $\Delta V = (2p\pi r^4/Et)(1 - \nu)$. Use a small-strain analysis.

$$\sigma_1 = \sigma_2 = \frac{pr}{2t}$$

$$\sigma_3 = 0$$

$$\epsilon_1 = \epsilon_2 = \frac{1}{E}(\sigma_1 - \nu\sigma_2)$$

$$\epsilon_1 = \epsilon_2 = \frac{pr}{2t\,E}(1 - \nu)$$

$$\epsilon_3 = \frac{1}{E}(-\nu(\sigma_1 + \sigma_2))$$

$$\epsilon_3 = -\frac{\nu\,pr}{t\,E}$$

$$V = \frac{4\pi r^3}{3}$$

$$V + \Delta V = \frac{4\pi}{3}(r + \Delta r)^3 = \frac{4\pi r^3}{3}(1 + \frac{\Delta r}{r})^3$$

where $\Delta V \ll V, \Delta r \ll r$

$$V + \Delta V = \frac{4\pi r^3}{3}\left(1 + 3\frac{\Delta r}{r}\right)$$

$$\epsilon_{\text{Vol}} = \frac{\Delta V}{V} = 3\left(\frac{\Delta r}{r}\right)$$

Since $\epsilon_1 = \epsilon_2 = \dfrac{2\pi(r + \Delta r) - 2\pi r}{2\pi r} = \dfrac{\Delta r}{r}$

$$\epsilon_{\text{Vol}} = 3\epsilon_1 = \frac{3pr}{2t\,E}(1 - \nu)$$

$$\Delta V = V\epsilon_{\text{Vol}} = \frac{2p\pi\,r^4}{E\,t}(1 - \nu)$$ ***(Q.E.D.)***

***10–56.** The thin-walled cylindrical pressure vessel of inner radius r and thickness t is subjected to an internal pressure p. If the material constants are E and ν, determine the strains in the circumferential and longitudinal directions. Using these results, compute the increase in both the diameter and the length of a steel pressure vessel filled with air and having an internal gauge pressure of 15 MPa. The vessel is 3 m long, and has an inner radius of 0.5 m and a thickness of 10 mm. $E_{st} = 200$ GPa, $\nu_{st} = 0.3$.

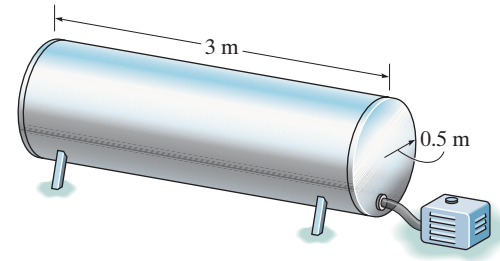

Normal Stress:

$$\sigma_1 = \frac{p\,r}{t} \qquad \sigma_2 = \frac{p\,r}{2\,t} \qquad \sigma_3 = 0$$

Normal Strain:

$$\epsilon_{cir} = \frac{1}{E}\left[\sigma_1 - \nu(\sigma_2 + \sigma_3)\right]$$

$$= \frac{1}{E}\left(\frac{p\,r}{t} - \frac{\nu\,p\,r}{2\,t}\right) = \frac{p\,r}{2\,E\,t}(2 - \nu) \qquad \textbf{Ans.}$$

$$\epsilon_{long} = \frac{1}{E}\left[\sigma_2 - \nu(\sigma_1 + \sigma_3)\right]$$

$$= \frac{1}{E}\left(\frac{p\,r}{2\,t} - \frac{\nu\,p\,r}{t}\right) = \frac{p\,r}{2\,E\,t}(1 - 2\nu) \qquad \textbf{Ans.}$$

Numerical Substitution:

$$\epsilon_{cir} = \frac{15(10^6)(0.5)}{2(200)(10^9)(0.01)}(2 - 0.3) = 3.1875\,(10^{-3})$$

$$\Delta d = \epsilon_{cir}\,d = 3.1875\,(10^{-3})(1000) = 3.19 \text{ mm} \qquad \textbf{Ans.}$$

$$\epsilon_{long} = \frac{15(10^6)(0.5)}{2(200)(10^9)(0.01)}(1 - 2(0.3)) = 0.75(10^{-3})$$

$$\Delta L = \epsilon_{long}\,L = 0.75\,(10^{-3})(3000) = 2.25 \text{ mm} \qquad \textbf{Ans.}$$

10–57. Estimate the increase in volume of the tank in Prob. 10–56.

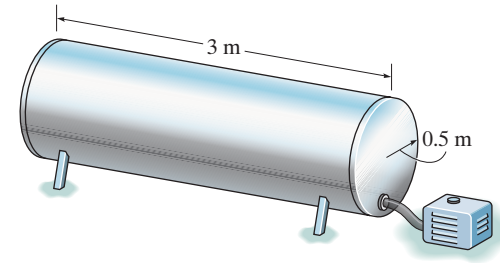

By basic principles,

$$\Delta V = \pi(r + \Delta r)^2(L + \Delta L) - \pi r^2 L = \pi(r^2 + \Delta r^2 + 2\,r\,\Delta r)(L + \Delta L) - \pi r^2 L$$

$$= \pi(r^2 L + r^2\,\Delta L + \Delta r^2 L + \Delta r^2 \Delta L + 2\,r\,\Delta r\,L + 2\,r\,\Delta r\,\Delta L - r^2 L)$$

$$= \pi(r^2 \Delta L + \Delta r^2\,L + \Delta r^2 \Delta L + 2\,r\,\Delta r\,L + 2\,r\,\Delta r\,\Delta L)$$

Neglecting the second order terms,

$$\Delta V = \pi(r^2 \Delta L + 2\,r\,\Delta r\,L)$$

From Prob. 10–56,

$$\Delta L = 0.00225 \text{ m} \qquad \Delta r = \frac{\Delta d}{2} = 0.00159375 \text{ m}$$

$$\Delta V = \pi[(0.5^2)(0.00225) + 2(0.5)(0.00159375)(3)] = 0.0168 \text{ m}^3$$ **Ans.**

Ans:
$\Delta V = 0.0168 \text{ m}^3$

10–58. A soft material is placed within the confines of a rigid cylinder which rests on a rigid support. Assuming that $\epsilon_x = 0$ and $\epsilon_y = 0$, determine the factor by which the modulus of elasticity will be increased when a load is applied if $\nu = 0.3$ for the material.

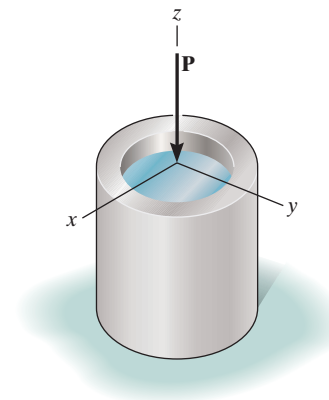

Normal Strain: Since the material is confined in a rigid cylinder. $\epsilon_x = \epsilon_y = 0$. Applying the generalized Hooke's Law,

$$\epsilon_x = \frac{1}{E}\left[\sigma_x - \nu(\sigma_y + \sigma_z)\right]$$

$$0 = \sigma_x - \nu(\sigma_y + \sigma_z) \qquad \textbf{[1]}$$

$$\epsilon_y = \frac{1}{E}\left[\sigma_y - \nu(\sigma_x + \sigma_z)\right]$$

$$0 = \sigma_y - \nu(\sigma_x + \sigma_z) \qquad \textbf{[2]}$$

Solving Eqs.[1] and [2] yields:

$$\sigma_x = \sigma_y = \frac{\nu}{1 - \nu}\sigma_z$$

Thus,

$$\epsilon_z = \frac{1}{E}\left[\sigma_z - \nu(\sigma_x + \sigma_y)\right]$$

$$= \frac{1}{E}\left[\sigma_z - \nu\left(\frac{\nu}{1 - \nu}\sigma_z + \frac{\nu}{1 - \nu}\sigma_z\right)\right]$$

$$= \frac{\sigma_z}{E}\left[1 - \frac{2\nu^2}{1 - \nu}\right]$$

$$= \frac{\sigma_z}{E}\left[\frac{1 - \nu - 2\nu^2}{1 - \nu}\right]$$

$$= \frac{\sigma_z}{E}\left[\frac{(1 + \nu)(1 - 2\nu)}{1 - \nu}\right]$$

Thus, when the material is not being confined and undergoes the same normal strain of ϵ_z, then the requtred modulus of elasticity is

$$E' = \frac{\sigma_z}{\epsilon_z} = \frac{1 - \nu}{(1 - 2\nu)(1 + \nu)}E$$

The increase factor is $k = \dfrac{E'}{E} = \dfrac{1 - \nu}{(1 - 2\nu)(1 + \nu)}$

$$= \frac{1 - 0.3}{[1 - 2(0.3)](1 + 0.3)}$$

$$= 1.35 \qquad \textbf{Ans.}$$

Ans:
$k = 1.35$

10–59. A material is subjected to plane stress. Express the distortion-energy theory of failure in terms of σ_x, σ_y, and τ_{xy}.

Maximum distortion energy theory:

$$(\sigma_1^2 - \sigma_1 \sigma_2 + \sigma_2^2) = \sigma_Y^2 \qquad (1)$$

$$\sigma_{1,2} = \frac{\sigma_x + \sigma_y}{2} \pm \sqrt{\left(\frac{\sigma_x - \sigma_y}{2}\right)^2 + \tau_{xy}^2}$$

Let $a = \dfrac{\sigma_x + \sigma_y}{2}$ and $b = \sqrt{\left(\dfrac{\sigma_x - \sigma_y}{2}\right)^2 + \tau_{xy}^2}$

$$\sigma_1 = a + b; \qquad \sigma_2 = a - b$$

$$\sigma_1^2 = a^2 + b^2 + 2\,a\,b; \qquad \sigma_2^2 = a^2 + b^2 - 2\,a\,b$$

$$\sigma_1 \sigma_2 = a^2 - b^2$$

From Eq. (1)

$$(a^2 + b^2 + 2\,a\,b - a^2 + b^2 + a^2 + b^2 - 2\,a\,b) = \sigma_Y^2$$

$$(a^2 + 3\,b^2) = \sigma_Y^2$$

$$\frac{(\sigma_x + \sigma_y)^2}{4} + 3\,\frac{(\sigma_x - \sigma_y)^2}{4} + 3\,\tau_{xy}^2 = \sigma_Y^2$$

$$\sigma_x^2 + \sigma_y^2 - \sigma_x \sigma_y + 3\,\tau_{xy}^2 = \sigma_Y^2 \qquad \textbf{Ans.}$$

Ans:
$\sigma_x^2 + \sigma_y^2 - \sigma_x \sigma_y + 3\tau_{xy}^2 = \sigma_y^2$

***10–60.** A material is subjected to plane stress. Express the maximum-shear-stress theory of failure in terms of σ_x, σ_y, and τ_{xy}. Assume that the principal stresses are of different algebraic signs.

Maximum shear stress theory:

$$|\sigma_1 - \sigma_2| = \sigma_Y \qquad (1)$$

$$\sigma_{1,2} = \frac{\sigma_x + \sigma_y}{2} \pm \sqrt{\left(\frac{\sigma_x - \sigma_y}{2}\right)^2 + \tau_{xy}^2}$$

$$\left|\sigma_1 - \sigma_2\right| = 2\sqrt{\left(\frac{\sigma_x - \sigma_y}{2}\right)^2 + \tau_{xy}^2}$$

From Eq. (1)

$$4\left[\left(\frac{\sigma_x - \sigma_y}{2}\right)^2 + \tau_{xy}^2\right] = \sigma_Y^2$$

$$(\sigma_x - \sigma_y)^2 + 4\,\tau_{xy}^2 = \sigma_Y^2 \qquad \textbf{Ans.}$$

10–61. The yield stress for a zirconium-magnesium alloy is $\sigma_Y = 15.3$ ksi. If a machine part is made of this material and a critical point in the material is subjected to in-plane principal stresses σ_1 and $\sigma_2 = -0.5\sigma_1$, determine the magnitude of σ_1 that will cause yielding according to the maximum-shear-stress theory.

$\sigma_Y = 15.3$ ksi

$\sigma_1 - \sigma_2 = 15.3$

$\sigma_1 - (-0.5\,\sigma_1) = 15.3$

$\sigma_1 = 10.2$ ksi **Ans.**

Ans:
$\sigma_1 = 10.2$ ksi

10–62. Solve Prob. 10–61 using the maximum-distortion energy theory.

$\sigma_1^2 - \sigma_1\sigma_2 + \sigma_2^2 = \sigma_Y^2$

$\sigma_1^2 - \sigma_1(-0.5\sigma_1) + (-0.5\sigma_1)^2 = \sigma_Y^2$

$1.75\,\sigma_1^2 = (15.3)^2$

$\sigma_1 = 11.6$ ksi **Ans.**

Ans:
$\sigma_1 = 11.6$ ksi

10–63. An aluminum alloy is to be used for a drive shaft such that it transmits 25 hp at 1500 rev/min. Using a factor of safety of 2.5 with respect to yielding, determine the smallest-diameter shaft that can be selected based on the maximum-distortion-energy theory. $\sigma_Y = 3.5$ ksi.

$$T = \frac{P}{\omega} \qquad \omega = \frac{1500(2\pi)}{60} = 50\pi$$

$$T = \frac{25(550)(12)}{50\pi} = \frac{3300}{\pi}$$

$$\tau = \frac{Tc}{J}, \qquad J = \frac{\pi}{2}c^4$$

$$\tau = \frac{\frac{3300}{\pi}c}{\frac{\pi}{2}c^4} = \frac{6600}{\pi^2 c^3}$$

$$\sigma_1 = \frac{6600}{\pi^2 c^3} \qquad \sigma_2 = \frac{-6600}{\pi^2 c^3}$$

$$\sigma_1^2 - \sigma_1\sigma_2 + \sigma_2^2 = \left(\frac{\sigma_Y}{\text{F.S.}}\right)^2$$

$$3\left(\frac{6600}{\pi^2 c^3}\right)^2 = \left(\frac{3.5(10^3)}{2.5}\right)^2$$

$$c = 0.9388 \text{ in.}$$

$$d = 1.88 \text{ in.}$$ **Ans.**

Ans:
$d = 1.88$ in.

***10–64.** If a shaft is made of a material for which $\sigma_Y = 50$ ksi, determine the torsional shear stress required to cause yielding using the maximum-distortion-energy theory.

$\sigma_1 = \tau \qquad \sigma_2 = -\tau$

$\sigma_1^2 - \sigma_1\sigma_2 + \sigma_2^2 = \sigma_Y^2$

$3\tau^2 = 50^2$

$\tau = 28.9$ ksi **Ans.**

10–65. Solve Prob. 10–64 using the maximum-shear-stress theory.

$\sigma_1 = \tau \qquad \sigma_2 = -\tau$

$|\sigma_1 - \sigma_2| = \sigma_Y$

$\tau - (-\tau) = 50$

$\tau = 25 \text{ ksi}$ **Ans.**

Ans:
$\tau = 25$ ksi

10–66. Derive an expression for an equivalent torque T_e that, if applied alone to a solid bar with a circular cross section, would cause the same energy of distortion as the combination of an applied bending moment M and torque T.

$$\tau = \frac{T_e c}{J}$$

Principal Stress:

$$\sigma_1 = \tau \quad \sigma_2 = -\tau$$

$$u_d = \frac{1+v}{3E}(\sigma_1^2 - \sigma_1\sigma_2 + \sigma_2^2)$$

$$(u_d)_1 = \frac{1+v}{3E}(3\tau^2) = \frac{1+v}{3E}\left(\frac{3T_e^2 c^2}{J^2}\right)$$

Bending Moment and Torsion:

$$\sigma = \frac{Mc}{I}; \qquad \tau = \frac{Tc}{J}$$

Principal Stress:

$$\sigma_{1,2} = \frac{\sigma + 0}{2} \pm \sqrt{\left(\frac{\sigma - 0}{2}\right)^2 + \tau^2}$$

$$\sigma_1 = \frac{\sigma}{2} + \sqrt{\frac{\sigma^2}{4} + \tau^2}; \qquad \sigma_2 = \frac{\sigma}{2} - \sqrt{\frac{\sigma^2}{4} + \tau^2}$$

Let $a = \dfrac{\sigma}{2} \qquad b = \sqrt{\dfrac{\sigma^2}{4} + \tau^2}$

$$\sigma_1^2 = a^2 + b^2 + 2ab$$

$$\sigma_1\sigma_2 = a^2 - b^2$$

$$\sigma_2^2 = a^2 + b^2 - 2ab$$

$$\sigma_1^2 - \sigma_1\sigma_2 + \sigma_2^2 = 3b^2 + a^2$$

$$u_d = \frac{1+v}{3E}(\sigma_1^2 - \sigma_1\sigma_2 + \sigma_2^2)$$

$$(u_d)_2 = \frac{1+v}{3E}(3b^2 + a^2) = \frac{1+v}{3E}\left(\frac{3\sigma^2}{4} + 3\tau^2 + \frac{\sigma^2}{4}\right)$$

$$= \frac{1+v}{3E}(\sigma^2 + 3\tau^2) = \frac{c^2(1+v)}{3E}\left(\frac{M^2}{I^2} + \frac{3T^2}{J^2}\right)$$

$$(u_d)_1 = (u_d)_2$$

$$\frac{c^2(1+v)}{3E}\frac{3T_e^2}{J^2} = \frac{c^2(1+v)}{3E}\left(\frac{M^2}{I^2} + \frac{3T^2}{J^2}\right)$$

10–66. Continued

For circular shaft

$$\frac{J}{I} = \frac{\frac{\pi}{2} c^4}{\frac{\pi}{4} c^4} = 2$$

$$T_e = \sqrt{\frac{J^2}{I^2} \frac{M^2}{3} + T^2}$$

$$T_e = \sqrt{\frac{4}{3} M^2 + T^2}$$ **Ans.**

Ans:
$T_e = \sqrt{\frac{4}{3}M^2 + T^2}$

10–67. Derive an expression for an equivalent bending moment M_e that, if applied alone to a solid bar with a circular cross section, would cause the same energy of distortion as the combination of an applied bending moment M and torque T.

Principal Stresses:

$$\sigma_1 = \frac{M_e c}{I}; \qquad \sigma_2 = 0$$

$$u_d = \frac{1 + v}{3E}(\sigma_1^2 - \sigma_1\sigma_2 + \sigma_2^2)$$

$$(u_d)_1 = \frac{1 + v}{3E}\left(\frac{M_e^2 c^2}{I^2}\right) \qquad (1)$$

Principal Stress:

$$\sigma_{1,2} = \frac{\sigma + 0}{2} \pm \sqrt{\left(\frac{\sigma - 0}{2}\right)^2 + \tau^3}$$

$$\sigma_1 = \frac{\sigma}{2} + \sqrt{\frac{\sigma^2}{4} + \tau^2}; \qquad \sigma_2 = \frac{\sigma}{2} - \sqrt{\frac{\sigma^2}{4} + \tau^2}$$

Distortion Energy:

Let $a = \frac{\sigma}{2}, b = \sqrt{\frac{\sigma^2}{4} + \tau^2}$

$$\sigma_1^2 = a^2 + b^2 + 2ab$$

$$\sigma_1\sigma_2 = a^2 - b^2$$

$$\sigma_2^2 = a^2 + b^2 - 2ab$$

$$\sigma_2^2 - \sigma_1\sigma_2 + \sigma_2^2 = 3b^2 + a^2$$

Apply $\sigma = \frac{Mc}{I}; \qquad \tau = \frac{Tc}{J}$

$$(u_d)_2 = \frac{1 + v}{3E}(3b^2 + a^2) = \frac{1 + v}{3E}\left(\frac{\sigma^2}{4} + \frac{3\sigma^2}{4} + 3\tau^2\right)$$

$$= \frac{1 + v}{3E}(\sigma^2 + 3\tau^2) = \frac{1 + v}{3E}\left(\frac{M^2c^2}{I^2} + \frac{3T^2c^2}{J^2}\right) \qquad (2)$$

Equating Eq. (1) and (2) yields:

$$\frac{(1 + v)}{3E}\left(\frac{M_e c^2}{I^2}\right) = \frac{1 + v}{3E}\left(\frac{M^2c^2}{I^2} + \frac{3T^2c^2}{J^2}\right)$$

$$\frac{M_e^2}{I^2} = \frac{M^2}{I^2} + \frac{3T^2}{J^2}$$

$$M_e^2 = M^2 + 3T^2\left(\frac{I}{J}\right)^2$$

10–67. Continued

For circular shaft

$$\frac{I}{J} = \frac{\frac{\pi}{4}c^4}{\frac{\pi}{2}c^4} = \frac{1}{2}$$

Hence, $M_e^2 = M^2 + 3\,T^2\left(\frac{1}{2}\right)^2$

$$M_e = \sqrt{M^2 + \frac{3}{4}T^2}$$ **Ans.**

Ans:
$M_e = \sqrt{M^2 + \frac{3}{4}T^2}$

***10–68.** The principal plane stresses acting on a differential element are shown. If the material is machine steel having a yield stress of $\sigma_Y = 700$ MPa, determine the factor of safety with respect to yielding if the maximum-shear-stress theory is considered

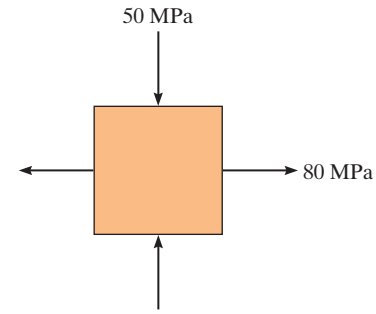

$\sigma_{max} = 80$ MPa $\qquad \sigma_{min} = -50$ MPa

$$\tau_{\substack{abs\\max}} = \frac{\sigma_{max} - \sigma_{min}}{2} = \frac{80 - (-50)}{2} = 65 \text{ MPa}$$

$$\tau_{max} = \frac{\sigma_Y}{2} = \frac{700}{2} = 350 \text{ MPa}$$

$$\text{F.S.} = \frac{\tau_{max}}{\tau_{\substack{abs\\max}}} = \frac{350}{65} = 5.38$$ **Ans.**

10–69. The short concrete cylinder having a diameter of 50 mm is subjected to a torque of 500 N · m and an axial compressive force of 2 kN. Determine if it fails according to the maximum-normal-stress theory. The ultimate stress of the concrete is $\sigma_{ult} = 28$ MPa.

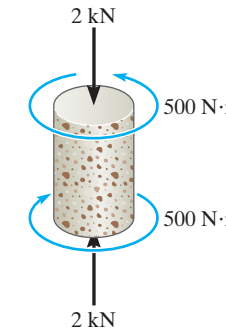

$$A = \frac{\pi}{4}(0.05)^2 = 1.9635(10^{-3})\ \text{m}^2$$

$$J = \frac{\pi}{2}(0.025)^4 = 0.61359(10^{-4})\ \text{m}^4$$

$$\sigma = \frac{P}{A} = \frac{2(10^3)}{1.9635(10^{-3})} = 1.019\ \text{MPa}$$

$$\tau = \frac{Tc}{J} = \frac{500(0.025)}{0.61359(10^{-6})} = 20.372\ \text{MPa}$$

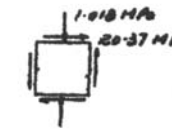

$$\sigma_x = 0 \qquad \sigma_y = -1.019\ \text{MPa} \qquad \tau_{xy} = 20.372\ \text{MPa}$$

$$\sigma_{1,2} = \frac{\sigma_x + \sigma_y}{2} \pm \sqrt{\left(\frac{\sigma_x - \sigma_y}{2}\right)^2 + \tau_{xy}{}^2}$$

$$\sigma_{1,2} = \frac{0 - 1.018}{2} \pm \sqrt{\left(\frac{0 - (-1.019)}{2}\right)^2 + 20.372^2}$$

$$\sigma_1 = 19.87\ \text{MPa} \qquad \sigma_2 = -20.89\ \text{MPa}$$

Failure criteria:

$|\sigma_1| < \sigma_{alt} = 28$ MPa **OK**

$|\sigma_2| < \sigma_{alt} = 28$ MPa **OK**

No. **Ans.**

Ans:
No.

10–70. Derive an expression for an equivalent bending moment M_e that, if applied alone to a solid bar with a circular cross section, would cause the same maximum shear stress as the combination of an applied moment M and torque T. Assume that the principal stresses are of opposite algebraic signs.

Bending and Torsion:

$$\sigma = \frac{M\,c}{I} = \frac{M\,c}{\frac{\pi}{4}c^4} = \frac{4\,M}{\pi\,c^3}; \qquad \tau = \frac{T\,c}{J} = \frac{T\,c}{\frac{\pi}{2}c^4} = \frac{2\,T}{\pi\,c^3}$$

The principal stresses:

$$\sigma_{1,2} = \frac{\sigma_x + \sigma_y}{2} \pm \sqrt{\left(\frac{\sigma_x - \sigma_y}{2}\right)^2 + \tau_{xy}^2} = \frac{\frac{4\,M}{\pi c^3} + 0}{2} \pm \sqrt{\left(\frac{\frac{4\,M}{\pi\,c^3} - 0}{2}\right)^2 + \left(\frac{2T}{\pi\,c^3}\right)^2}$$

$$= \frac{2\,M}{\pi\,c^3} \pm \frac{2}{\pi\,c^3}\sqrt{M^2 + T^2}$$

$$\tau_{\substack{\text{abs}\\ \text{max}}} = \frac{\sigma_1 - \sigma_2}{2} = \frac{2}{\pi\,c^3}\sqrt{M^2 + T^2} \qquad (1)$$

Pure bending:

$$\sigma_1 = \frac{M\,c}{I} = \frac{M_e\,c}{\frac{\pi}{4}c^4} = \frac{4\,M_e}{\pi\,c^3}; \qquad \sigma_2 = 0$$

$$\tau_{\substack{\text{abs}\\ \text{max}}} = \frac{\sigma_1 - \sigma_2}{2} = \frac{2\,M_e}{\pi\,c^3} \qquad (2)$$

Equating Eq. (1) and (2) yields:

$$\frac{2}{\pi\,c^3}\sqrt{M^2 + T^2} = \frac{2\,M_e}{\pi\,c^3}$$

$$M_e = \sqrt{M^2 + T^2} \qquad \textbf{Ans.}$$

Ans:
$M_e = \sqrt{M^2 + T^2}$

10–71. The plate is made of hard copper, which yields at $\sigma_Y = 105$ ksi. Using the maximum-shear-stress theory, determine the tensile stress σ_x that can be applied to the plate if a tensile stress $\sigma_y = 0.5\sigma_x$ is also applied.

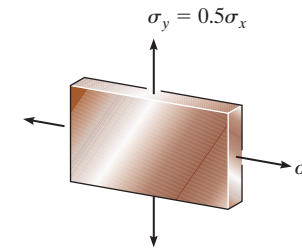

$\sigma_1 = \sigma_x \qquad \sigma_2 = \frac{1}{2}\sigma_x$

$|\sigma_1| = \sigma_Y$

$\sigma_x = 105$ ksi **Ans.**

Ans:
$\sigma_x = 105$ ksi

***10–72.** Solve Prob. 10–71 using the maximum-distortion energy theory.

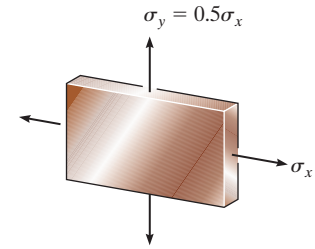

$$\sigma_1 = \sigma_x$$

$$\sigma_2 = \frac{\sigma_x}{2}$$

$$\sigma_1^2 - \sigma_1\sigma_2 + \sigma_2^2 = \sigma_Y^2$$

$$\sigma_x^2 - \frac{\sigma_x^2}{2} + \frac{\sigma_x^2}{4} = (105)^2$$

$$\sigma_x = 121 \text{ ksi}$$ **Ans.**

10–73. If the 2-in.-diameter shaft is made from brittle material having an ultimate strength of $\sigma_{ult} = 50$ ksi, for both tension and compression, determine if the shaft fails according to the maximum-normal-stress theory. Use a factor of safety of 1.5 against rupture.

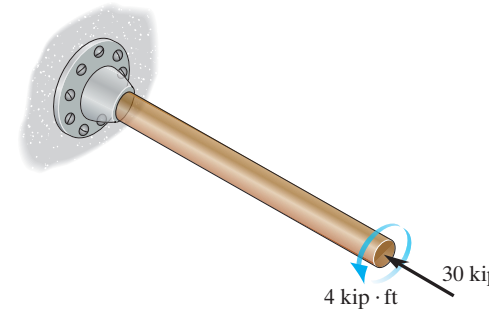

Normal Stress and Shear Stresses. The cross-sectional area and polar moment of inertia of the shaft's cross-section are

$$A = \pi\left(1^2\right) = \pi \text{in}^2 \qquad J = \frac{\pi}{2}\left(1^4\right) = \frac{\pi}{2}\text{in}^4$$

The normal stress is caused by axial stress.

$$\sigma = \frac{N}{A} = -\frac{30}{\pi} = -9.549 \text{ ksi}$$

The shear stress is contributed by torsional shear stress.

$$\tau = \frac{Tc}{J} = \frac{4(12)(1)}{\frac{\pi}{2}} = 30.56 \text{ ksi}$$

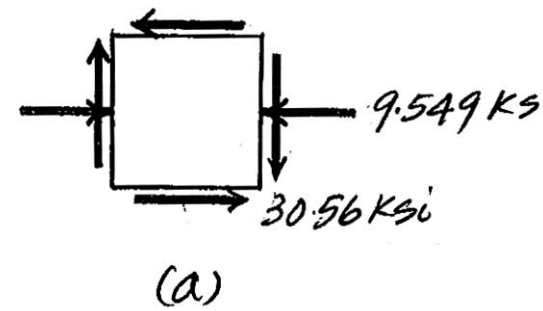

The state of stress at the points on the surface of the shaft is represented on the element shown in Fig. *a*.

In-Plane Principal Stress. $\sigma_x = -9.549$ ksi, $\sigma_y = 0$ and $\tau_{xy} = -30.56$ ksi. We have

$$\sigma_{1,2} = \frac{\sigma_x + \sigma_y}{2} \pm \sqrt{\left(\frac{\sigma_x - \sigma_y}{2}\right)^2 + \tau_{xy}{}^2}$$

$$= \frac{-9.549 + 0}{2} \pm \sqrt{\left(\frac{-9.549 - 0}{2}\right)^2 + (-30.56)^2}$$

$$= (-4.775 \pm 30.929) \text{ ksi}$$

$\sigma_1 = 26.15$ ksi $\qquad \sigma_2 = -35.70$ ksi

Maximum Normal-Stress Theory.

$$\sigma_{allow} = \frac{\sigma_{ult}}{F.S.} = \frac{50}{1.5} = 33.33 \text{ ksi}$$

$$|\sigma_1| = 26.15 \text{ ksi} < \sigma_{allow} = 33.33 \text{ ksi} \qquad \text{(O.K.)}$$

$$|\sigma_2| = 35.70 \text{ ksi} > \sigma_{allow} = 33.33 \text{ ksi} \qquad \text{(N.G.)}$$

Based on these results, the material *fails* according to the maximum normal-stress theory.

Ans:
Yes.

10–74. If the 2-in.-diameter shaft is made from cast iron having tensile and compressive ultimate strengths of $(\sigma_{ult})_t = 50$ ksi and $(\sigma_{ult})_c = 75$ ksi, respectively, determine if the shaft fails in accordance with Mohr's failure criterion.

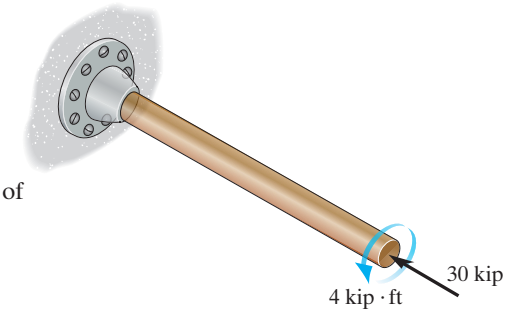

Normal Stress and Shear Stresses. The cross-sectional area and polar moment of inertia of the shaft's cross-section are

$$A = \pi\left(1^2\right) = \pi \text{ in}^2 \qquad J = \frac{\pi}{2}\left(1^4\right) = \frac{\pi}{2} \text{ in}^4$$

The normal stress is contributed by axial stress.

$$\sigma = \frac{N}{A} = -\frac{30}{\pi} = -9.549 \text{ ksi}$$

The shear stress is contributed by torsional shear stress.

$$\tau = \frac{Tc}{J} = \frac{4(12)(1)}{\frac{\pi}{2}} = 30.56 \text{ ksi}$$

The state of stress at the points on the surface of the shaft is represented on the element shown in Fig. *a*.

In-Plane Principal Stress. $\sigma_x = -9.549$ ksi, $\sigma_y = 0$, and $\tau_{xy} = -30.56$ ksi. We have

$$\sigma_{1,2} = \frac{\sigma_x + \sigma_y}{2} \pm \sqrt{\left(\frac{\sigma_x - \sigma_y}{2}\right)^2 + \tau_{xy}{}^2}$$

$$= \frac{-9.549 + 0}{2} \pm \sqrt{\left(\frac{-9.549 - 0}{2}\right)^2 + (-30.56)^2}$$

$$= (-4.775 \pm 30.929) \text{ ksi}$$

$$\sigma_1 = 26.15 \text{ ksi} \qquad \sigma_2 = -35.70 \text{ ksi}$$

Mohr's Failure Criteria. As shown in Fig. *b*, the coordinates of point *A*, which represent the principal stresses, are located inside the shaded region. Therefore, the material *does not fail* according to Mohr's failure criteria.

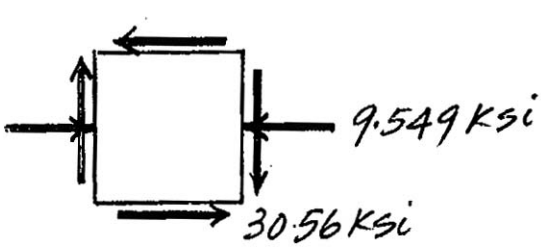

(a)

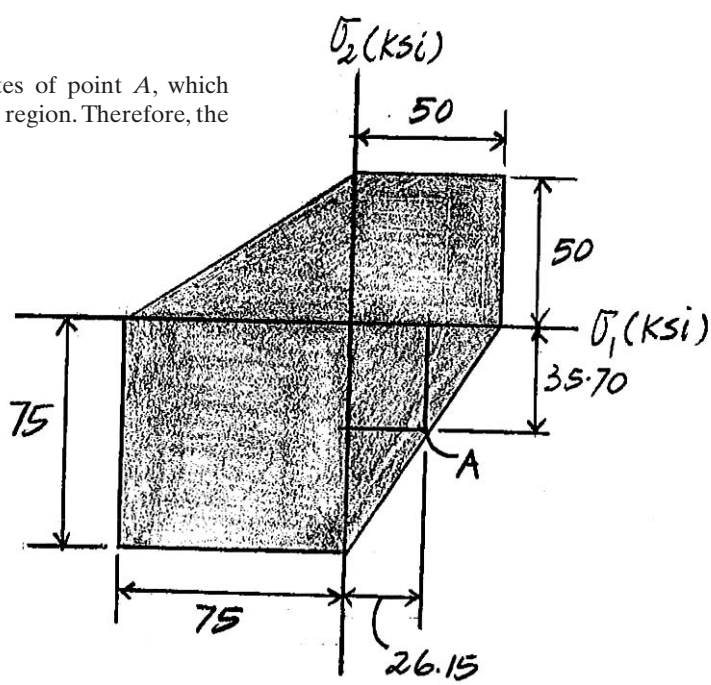

(b)

Ans:
No.

10–75. The components of plane stress at a critical point on an A-36 steel shell are shown. Determine if failure (yielding) has occurred on the basis of the maximum-shear-stress theory.

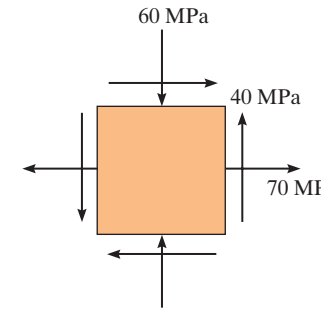

In accordance with the established sign convention, $\sigma_x = 70$ MPa, $\sigma_y = -60$ MPa and $\tau_{xy} = 40$ MPa.

$$\sigma_{1,2} = \frac{\sigma_x + \sigma_y}{2} \pm \sqrt{\left(\frac{\sigma_x - \sigma_y}{2}\right)^2 + \tau_{xy}{}^2}$$

$$= \frac{70 + (-60)}{2} \pm \sqrt{\left[\frac{70 - (-60)}{2}\right]^2 + 40^2}$$

$$= 5 \pm \sqrt{5825}$$

$$\sigma_1 = 81.32 \text{ MPa} \qquad \sigma_2 = -71.32 \text{ MPa}$$

In this case, σ_1 and σ_2 have opposite sign. Thus,

$$|\sigma_1 - \sigma_2| = |81.32 - (-71.32)| = 152.64 \text{ MPa} < \sigma_y = 250 \text{ MPa}$$

Based on this result, **the steel shell does not yield according to the maximum shear stress theory**.

Ans:
No.

***10–76.** The components of plane stress at a critical point on an A-36 steel shell are shown. Determine if failure (yielding) has occurred on the basis of the maximum-distortion-energy theory.

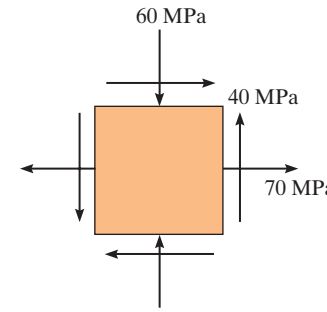

In accordance with the established sign convention, $\sigma_x = 70$ MPa, $\sigma_y = -60$ MPa and $\tau_{xy} = 40$ MPa.

$$\sigma_{1,2} = \frac{\sigma_x + \sigma_y}{2} \pm \sqrt{\left(\frac{\sigma_x - \sigma_y}{2}\right)^2 + \tau_{xy}{}^2}$$

$$= \frac{70 + (-60)}{2} \pm \sqrt{\left[\frac{70 - (-60)}{2}\right]^2 + 40^2}$$

$$= 5 \pm \sqrt{5825}$$

$$\sigma_1 = 81.32 \text{ MPa} \qquad \sigma_2 = -71.32 \text{ MPa}$$

$$\sigma_1{}^2 - \sigma_1\sigma_2 + \sigma_2{}^2 = 81.32^2 - 81.32(-71.32) + (-71.32)^2 = 17{,}500 < \sigma_y{}^2 = 62500$$

Based on this result, **the steel shell does not yield according to the maximum distortion energy theory**.

10–77. If the A-36 steel pipe has outer and inner diameters of 30 mm and 20 mm, respectively, determine the factor of safety against yielding of the material at point A according to the maximum-shear-stress theory.

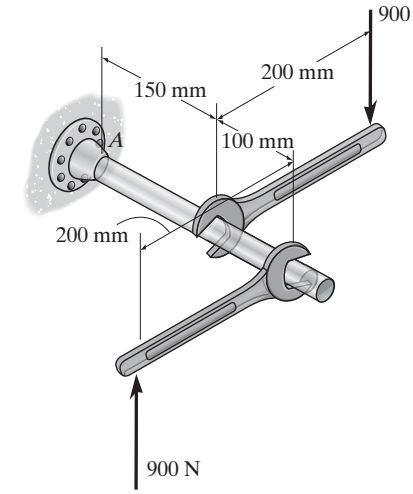

Internal Loadings. Considering the equilibrium of the free-body diagram of the post's right cut segment Fig. *a*,

$\Sigma F_y = 0;\quad V_y + 900 - 900 = 0 \qquad V_y = 0$

$\Sigma M_x = 0;\ T + 900(0.4) = 0 \qquad T = -360\,\text{N}\cdot\text{m}$

$\Sigma M_z = 0;\ M_z + 900(0.15) - 900(0.25) = 0 \quad M_z = 90\,\text{N}\cdot\text{m}$

Section Properties. The moment of inertia about the z axis and the polar moment of inertia of the pipe's cross section are

$$I_z = \frac{\pi}{4}\left(0.015^4 - 0.01^4\right) = 10.15625\pi\left(10^{-9}\right)\text{m}^4$$

$$J = \frac{\pi}{2}\left(0.015^4 - 0.01^4\right) = 20.3125\pi\left(10^{-9}\right)\text{m}^4$$

Normal Stress and Shear Stress. The normal stress is contributed by bending stress. Thus,

$$\sigma_Y = -\frac{My_A}{I_z} = -\frac{90(0.015)}{10.15625\pi\left(10^{-9}\right)} = -42.31\text{MPa}$$

The shear stress is contributed by torsional shear stress.

$$\tau = \frac{Tc}{J} = \frac{360(0.015)}{20.3125\pi\left(10^{-9}\right)} = 84.62\ \text{MPa}$$

The state of stress at point A is represented by the two-dimensional element shown in Fig. *b*.

In-Plane Principal Stress. $\sigma_x = -42.31$ MPa, $\sigma_z = 0$ and $\tau_{xz} = 84.62$ MPa. We have

$$\sigma_{1,2} = \frac{\sigma_x + \sigma_z}{2} \pm \sqrt{\left(\frac{\sigma_x - \sigma_z}{2}\right)^2 + \tau_{xz}{}^2}$$

$$= \frac{-42.31 + 0}{2} \pm \sqrt{\left(\frac{-42.31 - 0}{2}\right)^2 + 84.62^2}$$

$$= (-21.16 \pm 87.23)\ \text{MPa}$$

$\sigma_1 = 66.07$ MPa $\qquad \sigma_2 = -108.38$ MPa

10–77. Continued

Maximum Shear Stress Theory. σ_1 and σ_2 have opposite signs. This requires

$$|\sigma_1 - \sigma_2| = \sigma_{\text{allow}}$$

$$66.07 - (-108.38) = \sigma_{\text{allow}}$$

$$\sigma_{\text{allow}} = 174.45 \text{ MPa}$$

The factor of safety is

$$F.S. = \frac{\sigma_Y}{\sigma_{\text{allow}}} = \frac{250}{174.45} = 1.43 \qquad \textbf{Ans.}$$

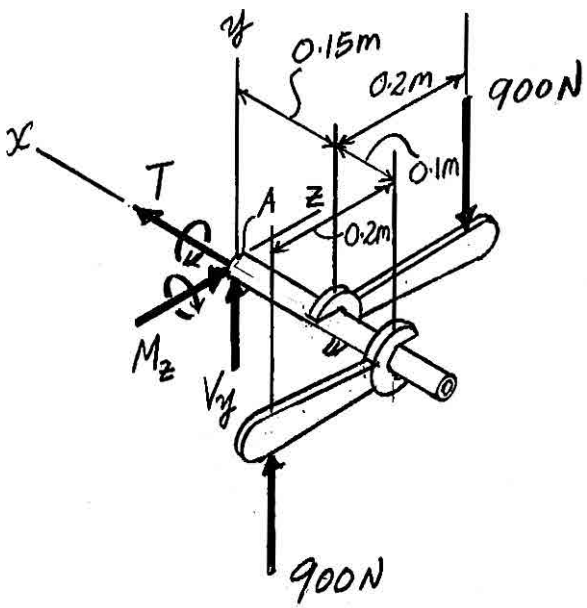

(a)

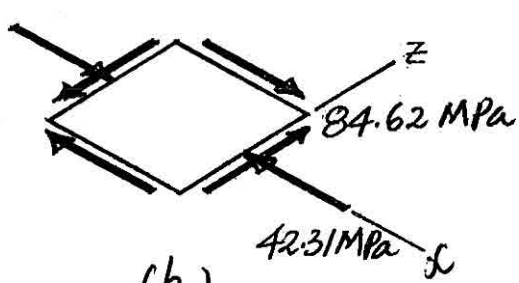

(b)

Ans:
F.S. = 1.43

10–78. If the A-36 steel pipe has an outer and inner diameter of 30 mm and 20 mm, respectively, determine the factor of safety against yielding of the material at point A according to the maximum-distortion-energy theory.

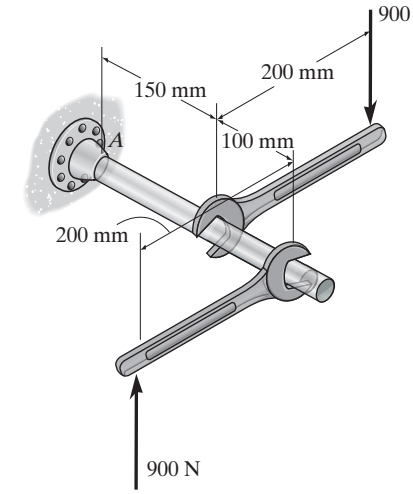

Internal Loadings: Considering the equilibrium of the free-body diagram of the pipe's right cut segment Fig. *a*,

$\Sigma F_y = 0;\quad V_y + 900 - 900 = 0 \qquad V_y = 0$

$\Sigma M_x = 0;\ T + 900(0.4) = 0 \qquad T = -360\,\text{N}\cdot\text{m}$

$\Sigma M_z = 0;\ M_z + 900(0.15) - 900(0.25) = 0 \quad M_z = 90\,\text{N}\cdot\text{m}$

Section Properties. The moment of inertia about the z axis and the polar moment of inertia of the pipe's cross section are

$$I_z = \frac{\pi}{4}\left(0.015^4 - 0.01^4\right) = 10.15625\pi\left(10^{-9}\right)\text{m}^4$$

$$J = \frac{\pi}{2}\left(0.015^4 - 0.01^4\right) = 20.3125\pi\left(10^{-9}\right)\text{m}^4$$

Normal Stress and Shear Stress. The normal stress is caused by bending stress. Thus,

$$\sigma_Y = -\frac{My_A}{I_z} = -\frac{90(0.015)}{10.15625\pi\left(10^{-9}\right)} = -42.31\text{MPa}$$

The shear stress is caused by torsional stress.

$$\tau = \frac{Tc}{J} = \frac{360(0.015)}{20.3125\pi\left(10^{-9}\right)} = 84.62\ \text{MPa}$$

The state of stress at point A is represented by the two-dimensional element shown in Fig. *b*.

In-Plane Principal Stress. $\sigma_x = -42.31$ MPa, $\sigma_z = 0$ and $\tau_{xz} = 84.62$ MPa. We have

$$\sigma_{1,2} = \frac{\sigma_x + \sigma_z}{2} \pm \sqrt{\left(\frac{\sigma_x - \sigma_z}{2}\right)^2 + \tau_{xz}{}^2}$$

$$= \frac{-42.31 + 0}{2} \pm \sqrt{\left(\frac{-42.31 - 0}{2}\right)^2 + 84.62^2}$$

$$= (-21.16 \pm 87.23)\ \text{MPa}$$

$\sigma_1 = 66.07$ MPa $\qquad \sigma_2 = -108.38$ MPa

10–78. Continued

Maximum Distortion Energy Theory.

$$\sigma_1{}^2 - \sigma_1\sigma_2 + \sigma_2{}^2 = \sigma_{\text{allow}}{}^2$$

$$66.07^2 - 66.07(-108.38) + (-108.38)^2 = \sigma_{\text{allow}}{}^2$$

$$\sigma_{\text{allow}} = 152.55 \text{ MPa}$$

Thus, the factor of safety is

$$F.S. = \frac{\sigma_Y}{\sigma_{\text{allow}}} = \frac{250}{152.55} = 1.64 \qquad \textbf{Ans.}$$

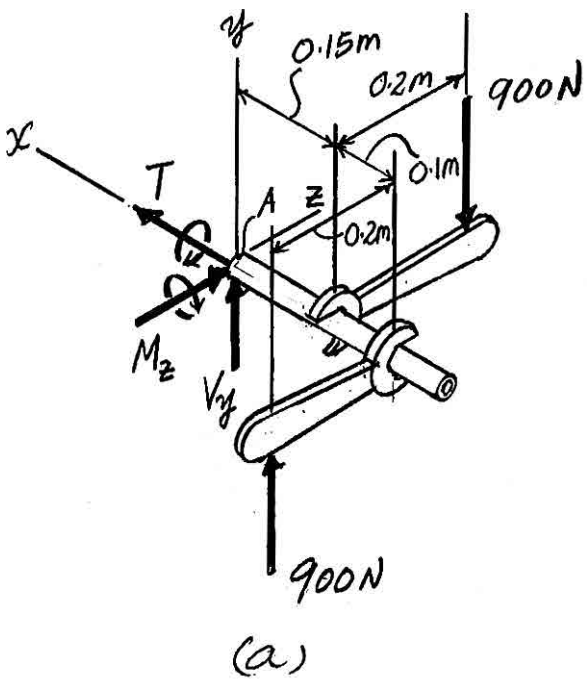

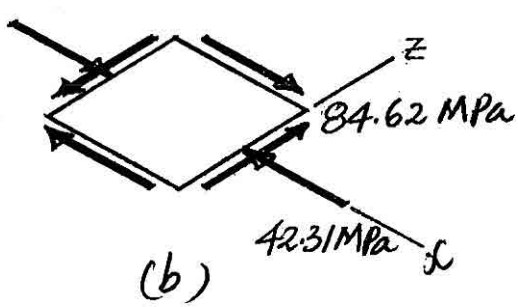

Ans:
F.S. = 1.64

10–79. The yield stress for heat-treated beryllium copper is $\sigma_Y = 130$ ksi. If this material is subjected to plane stress and elastic failure occurs when one principal stress is 145 ksi, what is the smallest magnitude of the other principal stress? Use the maximum-distortion-energy theory.

Maximum Distortion Energy Theory: With $\sigma_1 = 145$ ksi,

$$\sigma_1^2 - \sigma_1\sigma_2 + \sigma_2^2 = \sigma_Y^2$$

$$145^2 - 145\sigma_2 + \sigma_2^2 = 130^2$$

$$\sigma_2^2 - 145\sigma_2 + 4125 = 0$$

$$\sigma_2 = \frac{-(-145) \pm \sqrt{(-145)^2 - 4(1)(4125)}}{2(1)}$$

$$= 72.5 \pm 33.634$$

Choose the smaller root, $\sigma_2 = 38.9$ ksi **Ans.**

Ans:
$\sigma_2 = 38.9$ ksi

***10–80.** The yield stress for a uranium alloy is $\sigma_Y = 160$ MPa. If a machine part is made of this material and a critical point in the material is subjected to plane stress, such that the principal stresses are σ_1 and $\sigma_2 = 0.25\sigma_1$, determine the magnitude of σ_1 that will cause yielding according to the maximum-distortion energy theory.

$$\sigma_1^2 - \sigma_1 \sigma_2 + \sigma_2^2 = \sigma_Y^2$$

$$\sigma_1^2 - (\sigma_1)(0.25\sigma_1) + (0.25\sigma_1)^2 = \sigma_Y^2$$

$$0.8125\sigma_1^2 = \sigma_Y^2$$

$$0.8125\sigma_1^2 = (160)^2$$

$$\sigma_1 = 178 \text{ MPa}$$ **Ans.**

10–81. Solve Prob. 10–80 using the maximum-shear-stress theory.

$$\tau_{\substack{\text{abs}\\\text{max}}} = \frac{\sigma_1}{2} \qquad \tau_{\text{allow}} = \frac{\sigma_Y}{2} = \frac{160}{2} = 80 \text{ MPa}$$

$$\tau_{\substack{\text{abs}\\\text{max}}} = \tau_{\text{allow}}$$

$$\left|\frac{\sigma_1}{2}\right| = 80; \qquad \sigma_1 = 160 \text{ MPa}$$ **Ans.**

Ans:
$\sigma_1 = 160$ MPa

10–82. The state of stress acting at a critical point on the seat frame of an automobile during a crash is shown in the figure. Determine the smallest yield stress for a steel that can be selected for the member, based on the maximum-shear-stress theory.

Normal and Shear Stress: In accordance with the sign convention.

$$\sigma_x = 80 \text{ ksi} \qquad \sigma_y = 0 \qquad \tau_{xy} = 25 \text{ ksi}$$

In-Plane Principal Stress: Applying Eq. 9-5.

$$\sigma_{1,2} = \frac{\sigma_x + \sigma_y}{2} \pm \sqrt{\left(\frac{\sigma_x - \sigma_y}{2}\right)^2 + \tau_{xy}^2}$$

$$= \frac{80 + 0}{2} \pm \sqrt{\left(\frac{80 - 0}{2}\right)^2 + 25^2}$$

$$= 40 \pm 47.170$$

$$\sigma_1 = 87.170 \text{ ksi} \qquad \sigma_2 = -7.170 \text{ ksi}$$

Maximum Shear Stress Theory: σ_1 and σ_2 have opposite signs so

$$|\sigma_1 - \sigma_2| = \sigma_Y$$

$$|87.170 - (-7.170)| = \sigma_Y$$

$$\sigma_Y = 94.3 \text{ ksi} \qquad \textbf{Ans.}$$

Ans:
$\sigma_Y = 94.3$ ksi

10–83. Solve Prob. 10–82 using the maximum-distortion-energy theory.

Normal and Shear Stress: In accordance with the sign convention.

$$\sigma_x = 80 \text{ ksi} \qquad \sigma_y = 0 \qquad \tau_{xy} = 25 \text{ ksi}$$

In-Plane Principal Stress: Applying Eq. 9-5.

$$\sigma_{1,2} = \frac{\sigma_x + \sigma_y}{2} \pm \sqrt{\left(\frac{\sigma_x - \sigma}{2}\right)^2 + \tau_{xy}^2}$$

$$= \frac{80 + 0}{2} \pm \sqrt{\left(\frac{80 - 0}{2}\right)^2 + 25^2}$$

$$= 40 \pm 47.170$$

$$\sigma_1 = 87.170 \text{ ksi} \qquad \sigma_2 = -7.170 \text{ ksi}$$

Maximum Distortion Energy Theory:

$$\sigma_1^2 - \sigma_1\sigma_2 + \sigma_2^2 = \sigma_Y^2$$

$$87.170^2 - 87.170(-7.170) + (-7.170)^2 = \sigma_Y^2$$

$$\sigma_Y = 91.0 \text{ ksi} \qquad \textbf{Ans.}$$

Ans:
$\sigma_Y = 91.0$ ksi

***10–84.** A bar with a circular cross-sectional area is made of SAE 1045 carbon steel having a yield stress of $\sigma_Y = 150$ ksi. If the bar is subjected to a torque of 30 kip · in. and a bending moment of 56 kip · in., determine the required diameter of the bar according to the maximum-distortion-energy theory. Use a factor of safety of 2 with respect to yielding.

Normal and Shear Stresses: Applying the flexure and torsion formulas.

$$\sigma = \frac{Mc}{I} = \frac{56\left(\frac{d}{2}\right)}{\frac{\pi}{4}\left(\frac{d}{2}\right)^4} = \frac{1792}{\pi d^3}$$

$$\tau = \frac{Tc}{J} = \frac{30\left(\frac{d}{2}\right)}{\frac{\pi}{2}\left(\frac{d}{2}\right)^4} = \frac{480}{\pi d^3}$$

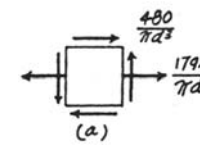

The critical state of stress is shown in Fig. (a) or (b), where

$$\sigma_x = \frac{1792}{\pi d^3} \qquad \sigma_y = 0 \qquad \tau_{xy} = \frac{480}{\pi d^3}$$

In-Plane Principal Stresses: Applying Eq. 9-5,

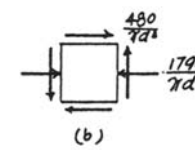

$$\sigma_{1,2} = \frac{\sigma_x + \sigma_y}{2} \pm \sqrt{\left(\frac{\sigma_x - \sigma_y}{2}\right)^2 + \tau_{xy}^2}$$

$$= \frac{\frac{1792}{\pi d^3} + 0}{2} \pm \sqrt{\left(\frac{\frac{1792}{\pi d^3} - 0}{2}\right)^2 + \left(\frac{480}{\pi d^3}\right)^2}$$

$$= \frac{896}{\pi d^3} \pm \frac{1016.47}{\pi d^3}$$

$$\sigma_1 = \frac{1912.47}{\pi d^3} \qquad \sigma_2 = -\frac{120.47}{\pi d^3}$$

Maximum Distortion Energy Theory:

$$\sigma_1^2 - \sigma_1\sigma_2 + \sigma_2^2 = \sigma_{\text{allow}}^2$$

$$\left(\frac{1912.47}{\pi d^3}\right)^2 - \left(\frac{1912.47}{\pi d^3}\right)\left(-\frac{120.47}{\pi d^3}\right) + \left(-\frac{120.47}{\pi d^3}\right)^2 = \left(\frac{150}{2}\right)^2$$

$$d = 2.03 \text{ in.}$$ **Ans.**

10–85. The state of stress acting at a critical point on a machine element is shown in the figure. Determine the smallest yield stress for a steel that might be selected for the part, based on the maximum-shear-stress theory.

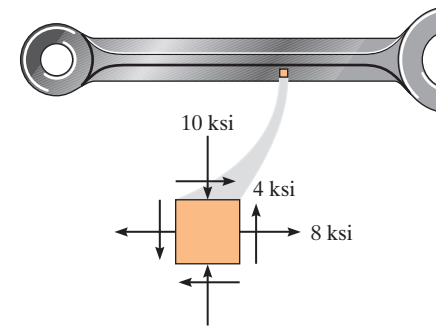

The Principal Stresses:

$$\sigma_{1,2} = \frac{\sigma_x + \sigma_y}{2} \pm \sqrt{\left(\frac{\sigma_x - \sigma_y}{2}\right)^2 + \tau_{xy}^2}$$

$$= \frac{8 - 10}{2} \pm \sqrt{\left(\frac{8 - (-10)}{2}\right)^2 + 4^2}$$

$\sigma_1 = 8.8489$ ksi $\qquad \sigma_2 = -10.8489$ ksi

Maximum Shear Stress Theory: Both principal stresses have opposite sign. hence,

$|\sigma_1 - \sigma_2| = \sigma_Y \qquad 8.8489 - (-10.8489) = \sigma_Y$

$\sigma_Y = 19.7$ ksi **Ans.**

Ans:
$\sigma_Y = 19.7$ ksi

10–86. The principal stresses acting at a point on a thin-walled cylindrical pressure vessel are $\sigma_1 = pr/t$, $\sigma_2 = pr/2t$, and $\sigma_3 = 0$. If the yield stress is σ_Y, determine the maximum value of p based on (a) the maximum-shear-stress theory and (b) the maximum-distortion-energy theory.

a) Maximum Shear Stress Theory: σ_1 and σ_2 have the same signs, then

$$|\sigma_2| = \sigma_Y \qquad \left|\frac{pr}{2t}\right| = \sigma_Y \qquad p = \frac{2t}{r}\sigma_Y$$

$$|\sigma_1| = \sigma_Y \qquad \left|\frac{pr}{t}\right| = \sigma_Y \qquad p = \frac{t}{r}\sigma_Y \ (Controls!) \qquad \textbf{Ans.}$$

b) Maximum Distortion Energy Theory:

$$\sigma_1^2 - \sigma_1\sigma_2 + \sigma_2^2 = \sigma_Y^2$$

$$\left(\frac{pr}{t}\right)^2 - \left(\frac{pr}{t}\right)\left(\frac{pr}{2t}\right) + \left(\frac{pr}{2t}\right)^2 = \sigma_Y^2$$

$$p = \frac{2t}{\sqrt{3}r}\sigma_Y \qquad \textbf{Ans.}$$

Ans:

(a) $p = \frac{t}{r}\sigma_y$,

(b) $p = \frac{2t}{\sqrt{3}r}\sigma_y$

10–87. If a solid shaft having a diameter d is subjected to a torque **T** and moment **M**, show that by the maximum-shear-stress theory the maximum allowable shear stress is $\tau_{\text{allow}} = (16/\pi d^3)\sqrt{M^2 + T^2}$. Assume the principal stresses to be of opposite algebraic signs.

Section properties:

$$I = \frac{\pi}{4}\left(\frac{d}{2}\right)^4 = \frac{\pi d^4}{64}; \qquad J = \frac{\pi}{2}\left(\frac{d}{2}\right)^4 = \frac{\pi d^4}{32}$$

Thus,

$$\sigma = \frac{Mc}{I} = \frac{M(\frac{d}{2})}{\frac{\pi d^4}{64}} = \frac{32\,M}{\pi d^3}$$

$$\tau = \frac{T\,c}{J} = \frac{T\,(\frac{d}{2})}{\frac{\pi d^4}{32}} = \frac{16\,T}{\pi d^3}$$

The principal stresses:

$$\sigma_{1,2} = \frac{\sigma_x + \sigma_y}{2} \pm \sqrt{\left(\frac{\sigma_x - \sigma_y}{2}\right)^2 + \tau_{xy}^2}$$

$$= \frac{16\,M}{\pi\,d^3} \pm \sqrt{\left(\frac{16\,M}{\pi\,d^3}\right)^2 + \left(\frac{16\,T}{\pi\,d^3}\right)^2} = \frac{16\,M}{\pi d^3} \pm \frac{16}{\pi\,d^3}\sqrt{M^2 + T^2}$$

Assume σ_1 and σ_2 have opposite sign, hence,

$$\tau_{\text{allow}} = \frac{\sigma_1 - \sigma_2}{2} = \frac{2\left[\frac{16}{\pi d^3}\sqrt{M^2 + T^2}\right]}{2} = \frac{16}{\pi d^3}\sqrt{M^2 + T^2} \qquad \textbf{\textit{(Q.E.D.)}}$$

***10–88.** If a solid shaft having a diameter d is subjected to a torque **T** and moment **M**, show that by the maximum-normal-stress theory the maximum allowable principal stress is $\sigma_{\text{allow}} = (16/\pi d^3)(M + \sqrt{M^2 + T^2})$.

Section properties:

$$I = \frac{\pi\, d^4}{64}; \qquad J = \frac{\pi\, d^4}{32}$$

Stress components:

$$\sigma = \frac{M\,c}{I} = \frac{M\left(\frac{d}{2}\right)}{\frac{\pi}{64}\,d^4} = \frac{32\,M}{\pi\, d^3}; \qquad \tau = \frac{T\,c}{J} = \frac{T\left(\frac{d}{2}\right)}{\frac{\pi}{32}\,d^4} = \frac{16\,T}{\pi\, d^3}$$

The principal stresses:

$$\sigma_{1,2} = \frac{\sigma_x + \sigma_y}{2} \pm \sqrt{\left(\frac{\sigma_x - \sigma_y}{2}\right)^2 + \tau_{xy}^2} = \frac{\frac{32\,M}{\pi\, d^3} + 0}{2} \pm \sqrt{\left(\frac{\frac{32\,M}{\pi\, d^3} - 0}{2}\right)^2 + \left(\frac{16\,T}{\pi\, d^3}\right)^2}$$

$$= \frac{16\,M}{\pi\, d^3} \pm \frac{16}{\pi\, d^3}\sqrt{M^2 + T^2}$$

Maximum normal stress theory. Assume $\sigma_1 > \sigma_2$

$$\sigma_{\text{allow}} = \sigma_1 = \frac{16\,M}{\pi\, d^3} + \frac{16}{\pi\, d^3}\sqrt{M^2 + T^2}$$

$$= \frac{16}{\pi\, d^3}\left[M + \sqrt{M^2 + T^2}\right] \qquad \textbf{\textit{(Q.E.D.)}}$$

10–89. The gas tank has an inner diameter of 1.50 m and a wall thickness of 25 mm. If it is made from A-36 steel and the tank is pressured to 5 MPa, determine the factor of safety against yielding using (a) the maximum-shear-stress theory, and (b) the maximum-distortion-energy theory.

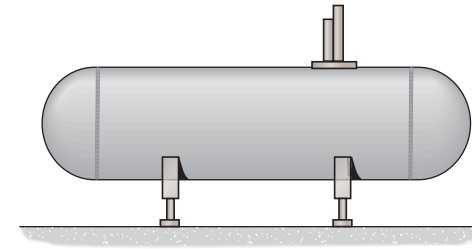

(a) **Normal Stress.** Since $\frac{r}{t} = \frac{0.75}{0.025} = 30 > 10$, thin-wall analysis can be used. We have

$$\sigma_1 = \sigma_h = \frac{pr}{t} = \frac{5(0.75)}{0.025} = 150 \text{ MPa}$$

$$\sigma_2 = \sigma_{\text{long}} = \frac{pr}{2t} = \frac{5(0.75)}{2(0.025)} = 75 \text{ MPa}$$

Maximum Shear Stress Theory. σ_1 and σ_2 have the sign. Thus,

$$|\sigma_1| = \sigma_{\text{allow}}$$

$$\sigma_{\text{allow}} = 150 \text{ MPa}$$

The factor of safety is

$$F.S. = \frac{\sigma_Y}{\sigma_{\text{allow}}} = \frac{250}{150} = 1.67 \qquad \textbf{Ans.}$$

(b) **Maximum Distortion Energy Theory.**

$$\sigma_1{}^2 - \sigma_1\sigma_2 + \sigma_2{}^2 = \sigma_{\text{allow}}{}^2$$

$$150^2 - 150(75) + 75^2 = \sigma_{\text{allow}}{}^2$$

$$\sigma_{\text{allow}} = 129.90 \text{ MPa}$$

The factor of safety is

$$F.S. = \frac{\sigma_Y}{\sigma_{\text{allow}}} = \frac{250}{129.90} = 1.92 \qquad \textbf{Ans.}$$

Ans:
(a) F.S. = 1.67,
(b) F.S. = 1.92

10–90. The gas tank is made from A-36 steel and has an inner diameter of 1.50 m. If the tank is designed to withstand a pressure of 5 MPa, determine the required minimum wall thickness to the nearest millimeter using (a) the maximum-shear-stress theory, and (b) maximum-distortion-energy theory. Apply a factor of safety of 1.5 against yielding.

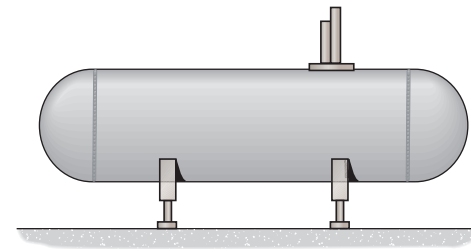

(a) **Normal Stress.** Assuming that thin-wall analysis is valid, we have

$$\sigma_1 = \sigma_h = \frac{pr}{t} = \frac{5\left(10^6\right)(0.75)}{t} = \frac{3.75\left(10^6\right)}{t}$$

$$\sigma_2 = \sigma_{\text{long}} = \frac{pr}{2t} = \frac{5\left(10^6\right)(0.75)}{2t} = \frac{1.875\left(10^6\right)}{t}$$

Maximum Shear Stress Theory.

$$\sigma_{\text{allow}} = \frac{\sigma_Y}{F.S.} = \frac{250\left(10^6\right)}{1.5} = 166.67\left(10^6\right)\text{Pa}$$

σ_1 and σ_2 have the same sign. Thus,

$$|\sigma_1| = \sigma_{\text{allow}}$$

$$\frac{3.75\left(10^6\right)}{t} = 166.67\left(10^6\right)$$

$$t = 0.0225 \quad \text{m} = 22.5 \text{ mm}$$ **Ans.**

Since $\frac{r}{t} = \frac{0.75}{0.0225} = 33.3 > 10$, thin-wall analysis is valid.

(b) **Maximum Distortion Energy Theory.**

$$\sigma_{\text{allow}} = \frac{\sigma_Y}{F.S.} = \frac{250\left(10^6\right)}{1.5} = 166.67\left(10^6\right)\text{Pa}$$

Thus,

$$\sigma_1{}^2 - \sigma_1\sigma_2 + \sigma_2{}^2 = \sigma_{\text{allow}}{}^2$$

$$\left[\frac{3.75\left(10^6\right)}{t}\right]^2 - \left[\frac{3.75\left(10^6\right)}{t}\right]\left[\frac{1.875\left(10^6\right)}{t}\right] + \left[\frac{1.875\left(10^6\right)}{t}\right]^2 = \left[166.67\left(10^6\right)\right]^2$$

$$\frac{3.2476\left(10^6\right)}{t} = 166.67\left(10^6\right)$$

$$t = 0.01949 \quad \text{m} = 19.5 \text{ mm}$$ **Ans.**

Since $\frac{r}{t} = \frac{0.75}{0.01949} = 38.5 > 10$, thin-wall analysis is valid.

Ans:
(a) $t = 22.5$ mm,
(b) $t = 19.5$ mm

10–91. The internal loadings at a critical section along the steel drive shaft of a ship are calculated to be a torque of 2300 lb · ft, a bending moment of 1500 lb · ft, and an axial thrust of 2500 lb. If the yield points for tension and shear $\sigma_Y = 100$ ksi and $\tau_Y = 50$ ksi, respectively, determine the required diameter of the shaft using the maximum-shear-stress theory.

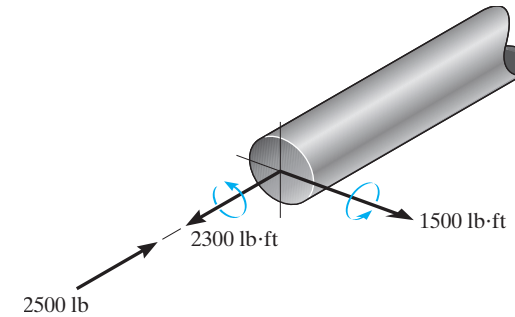

$$A = \pi c^2 \qquad I = \frac{\pi}{4} c^4 \qquad J = \frac{\pi}{2} c^4$$

$$\sigma_A = \frac{P}{A} + \frac{Mc}{I} = -\left(\frac{2500}{\pi c^2} + \frac{1500(12)(c)}{\frac{\pi c^4}{4}}\right) = -\left(\frac{2500}{\pi c^2} + \frac{72\,000}{\pi c^3}\right)$$

$$\tau_A = \frac{Tc}{J} = \frac{2300(12)(c)}{\frac{\pi c^4}{2}} = \frac{55\,200}{\pi c^3}$$

$$\sigma_{1,2} = \frac{\sigma_x + \sigma_y}{2} \pm \sqrt{\left(\frac{\sigma_x - \sigma_y}{2}\right)^2 + \tau_{xy}^2}$$

$$= -\left(\frac{2500\,c + 72\,000}{2\pi c^3}\right) \pm \sqrt{\left(\frac{2500c + 72\,000}{2\pi c^3}\right)^2 + \left(\frac{55200}{\pi c^3}\right)^2} \qquad (1)$$

Assume σ_1 and σ_2 have opposite signs:

$$|\sigma_1 - \sigma_2| = \sigma_Y$$

$$2\sqrt{\left(\frac{2500c + 72\,000}{2\pi c^3}\right)^2 + \left(\frac{55\,200}{\pi c^3}\right)^2} = 100(10^3)$$

$$(2500c + 72000)^2 + 110400^2 = 10\,000(10^6)\pi^2 c^6$$

$$6.25c^2 + 360c + 17372.16 - 10\,000\pi^2 c^6 = 0$$

By trial and error:

$c = 0.750\,57$ in.

Substitute c into Eq. (1):

$\sigma_1 = 22\,193$ psi $\qquad \sigma_2 = -77\,807$ psi

σ_1 and σ_2 are of opposite signs **OK**

Therefore,

$d = 1.50$ in. **Ans.**

Ans:
$d = 1.50$ in.

***10–92.** The shaft consists of a solid segment AB and a hollow segment BC, which are rigidly joined by the coupling at B. If the shaft is made from A-36 steel, determine the maximum torque T that can be applied according to the maximum-shear-stress theory. Use a factor of safety of 1.5 against yielding.

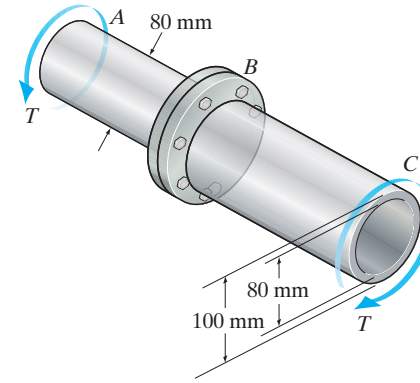

Shear Stress: This is a case of pure shear, and the shear stress is contributed by torsion. For the hollow segment, $J_h = \frac{\pi}{2}\left(0.05^4 - 0.04^4\right) = 1.845\pi\left(10^{-6}\right)\text{ m}^4$. Thus,

$$(\tau_{\max})_h = \frac{Tc_h}{J_h} = \frac{T(0.05)}{1.845\pi\left(10^{-6}\right)} = 8626.28T$$

For the solid segment, $J_s = \frac{\pi}{2}\left(0.04^4\right) = 1.28\pi\left(10^{-6}\right)\text{ m}^4$. Thus,

$$(\tau_{\max})_s = \frac{Tc_s}{J_s} = \frac{T(0.04)}{1.28\pi\left(10^{-6}\right)} = 9947.18T$$

By comparision, the points on the surface of the solid segment are critical and their state of stress is represented on the element shown in Fig. *a*.

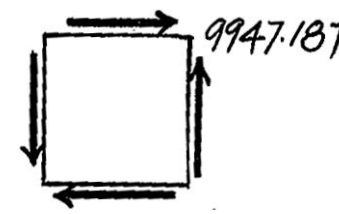

(a)

In-Plane Principal Stress. $\sigma_x = \sigma_y = 0$ and $\tau_{xy} = 9947.18T$. We have

$$\sigma_{1,2} = \frac{\sigma_x + \sigma_y}{2} \pm \sqrt{\left(\frac{\sigma_x - \sigma_y}{2}\right)^2 + \tau_{xy}^2}$$

$$= \frac{0 + 0}{2} \pm \sqrt{\left(\frac{0 - 0}{2}\right)^2 + (9947.18T)^2}$$

$$\sigma_1 = 9947.18T \qquad \sigma_2 = -9947.18T$$

Maximum Shear Stress Theory.

$$\sigma_{\text{allow}} = \frac{\sigma_Y}{F.S.} = \frac{250}{1.5} = 166.67\text{ MPa}$$

Since σ_1 and σ_2 have opposite signs,

$$|\sigma_1 - \sigma_2| = \sigma_{\text{allow}}$$

$$9947.18T - (-9947.18T) = 166.67\left(10^6\right)$$

$$T = 8377.58\text{ N}\cdot\text{m} = 8.38\text{ kN}\cdot\text{m} \qquad \textbf{Ans.}$$

10–93. The shaft consists of a solid segment AB and a hollow segment BC, which are rigidly joined by the coupling at B. If the shaft is made from A-36 steel, determine the maximum torque T that can be applied according to the maximum-distortion-energy theory. Use a factor of safety of 1.5 against yielding.

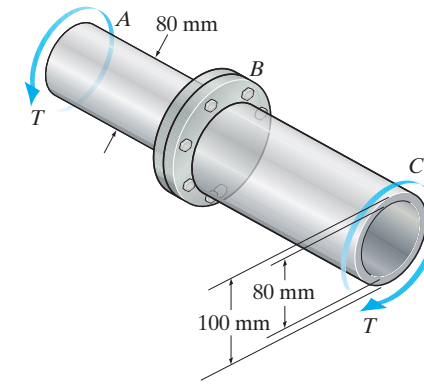

Shear Stress. This is a case of pure shear, and the shear stress is contributed by torsion. For the hollow segment, $J_h = \frac{\pi}{2}\left(0.05^4 - 0.04^4\right) = 1.845\pi\left(10^{-6}\right)\ \text{m}^4$. Thus,

$$(\tau_{\max})_h = \frac{Tc_h}{J_h} = \frac{T(0.05)}{1.845\pi\left(10^{-6}\right)} = 8626.28T$$

For the solid segment, $J_s = \frac{\pi}{2}\left(0.04^4\right) = 1.28\pi\left(10^{-6}\right)\ \text{m}^4$. Thus,

$$(\tau_{\max})_s = \frac{Tc_s}{J_s} = \frac{T(0.04)}{1.28\pi\left(10^{-6}\right)} = 9947.18T$$

By comparision, the points on the surface of the solid segment are critical and their state of stress is represented on the element shown in Fig. *a*.

In-Plane Principal Stress. $\sigma_x = \sigma_y = 0$ and $\tau_{xy} = 9947.18T$. We have

$$\sigma_{1,2} = \frac{\sigma_x + \sigma_y}{2} \pm \sqrt{\left(\frac{\sigma_x - \sigma_y}{2}\right)^2 + \tau_{xy}^2}$$

$$= \frac{0 + 0}{2} \pm \sqrt{\left(\frac{0 - 0}{2}\right)^2 + (9947.18T)^2}$$

$$\sigma_1 = 9947.18T \qquad \sigma_2 = -9947.18T$$

Maximum Distortion Energy Theory.

$$\sigma_{\text{allow}} = \frac{\sigma_Y}{F.S.} = \frac{250}{1.5} = 166.67\ \text{MPa}$$

Then,

$$\sigma_1{}^2 - \sigma_1\sigma_2 + \sigma_2{}^2 = \sigma_{\text{allow}}{}^2$$

$$(9947.18T)^2 - (9947.18T)(-9947.18T) + (-9947.18T)^2 = \left[166.67\left(10^6\right)\right]^2$$

$$T = 9673.60\ \text{N}\cdot\text{m} = 9.67\ \text{kN}\cdot\text{m}$$ **Ans.**

Ans:
$T = 9.67\ \text{kN}\cdot\text{m}$

10–94. In the case of plane stress, where the in-plane principal strains are given by ϵ_1 and ϵ_2, show that the third principal strain can be obtained from $\epsilon_3 = -[\nu/(1-\nu)](\epsilon_1 + \epsilon_2)$, where ν is Poisson's ratio for the material.

Generalized Hooke's Law: In the case of plane stress, $\sigma_3 = 0$. Thus,

$$\epsilon_1 = \frac{1}{E}(\sigma_1 - \nu\sigma_2) \qquad (1)$$

$$\epsilon_2 = \frac{1}{E}(\sigma_2 - \nu\sigma_1) \qquad (2)$$

$$\epsilon_3 = -\frac{\nu}{E}(\sigma_1 + \sigma_2) \qquad (3)$$

Solving for σ_1 and σ_2 using Eqs. (1) and (2), we obtain

$$\sigma_1 = \frac{E(\epsilon_1 + \nu\epsilon_2)}{1-\nu^2} \qquad \sigma_2 = \frac{E(\epsilon_2 + \nu\epsilon_1)}{1-\nu^2}$$

Substituting these results into Eq. (3),

$$\epsilon_3 = -\frac{\nu}{E}\left[\frac{E(\epsilon_1 + \nu\epsilon_2)}{1-\nu^2} + \frac{E(\epsilon_2 + \nu\epsilon_1)}{1-\nu^2}\right]$$

$$\epsilon_3 = -\frac{\nu}{1-\nu}\left[\frac{(\epsilon_1 + \epsilon_2) + \nu(\epsilon_1 + \epsilon_2)}{1+\nu}\right]$$

$$\epsilon_3 = -\frac{\nu}{1-\nu}\left[\frac{(\epsilon_1 + \epsilon_2)(1+\nu)}{1+\nu}\right]$$

$$\epsilon_3 = -\frac{\nu}{1-\nu}(\epsilon_1 + \epsilon_2) \qquad \textit{(Q.E.D.)} \qquad \textbf{Ans.}$$

10–95. The plate is made of material having a modulus of elasticity $E = 200$ GPa and Poisson's ratio $\nu = \frac{1}{3}$. Determine the change in width a, height b, and thickness t when it is subjected to the uniform distributed loading shown.

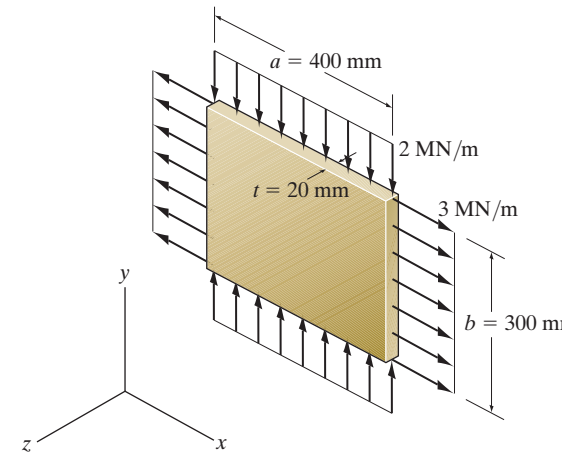

Normal Stress: The normal stresses along the x, y, and z axes are

$$\sigma_x = \frac{3(10^6)}{0.02} = 150 \text{ MPa}$$

$$\sigma_y = -\frac{2(10^6)}{0.02} = -100 \text{ MPa}$$

$$\sigma_z = 0$$

Generalized Hooke's Law:

$$\epsilon_x = \frac{1}{E}\left[\sigma_x - \nu(\sigma_y + \sigma_z)\right]$$

$$= \frac{1}{200(10^9)}\left\{150(10^6) - \frac{1}{3}\left[-100(10^6) + 0\right]\right\}$$

$$= 0.9167(10^{-3})$$

$$\epsilon_y = \frac{1}{E}\left[\sigma_y - \nu(\sigma_x + \sigma_z)\right]$$

$$= \frac{1}{200(10^9)}\left\{-100(10^6) - \frac{1}{3}\left[150(10^6) + 0\right]\right\}$$

$$= -0.75(10^{-3})$$

$$\epsilon_z = \frac{1}{E}\left[\sigma_z - \nu(\sigma_x + \sigma_y)\right]$$

$$= \frac{1}{200(10^9)}\left\{0 - \frac{1}{3}\left[150(10^6) + (-100)(10^6)\right]\right\}$$

$$= -83.33(10^{-6})$$

Thus, the changes in dimensions of the plate are

$$\delta_a = \epsilon_x a = 0.9167(10^{-3})(400) = 0.367 \text{ mm} \qquad \textbf{Ans.}$$

$$\delta_b = \epsilon_y b = -0.75(10^{-3})(300) = -0.225 \text{ mm} \qquad \textbf{Ans.}$$

$$\delta_t = \epsilon_z t = -83.33(10^{-6})(20) = -0.00167 \text{ mm} \qquad \textbf{Ans.}$$

The negative signs indicate that b and t contract.

Ans:
$\delta_a = 0.367$ mm, $\delta_b = -0.255$ mm,
$\delta_t = -0.00167$ mm

***10–96.** The principal plane stresses acting at a point are shown in the figure. If the material is machine steel having a yield stress of $\sigma_Y = 500$ MPa, determine the factor of safety with respect to yielding if the maximum-shear-stress theory is considered.

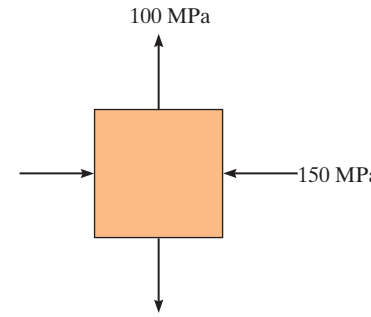

Here, the in plane principal stresses are

$$\sigma_1 = \sigma_y = 100 \text{ MPa} \qquad \sigma_2 = \sigma_x = -150 \text{ MPa}$$

Since σ_1 and σ_2 have the same sign,

$$F.S = \frac{\sigma_y}{|\sigma_1 - \sigma_2|} = \frac{500}{|100 - (-150)|} = 2 \qquad \textbf{Ans.}$$

10–97. The components of plane stress at a critical point on a thin steel shell are shown. Determine if failure (yielding) has occurred on the basis of the maximum-distortion-energy theory. The yield stress for the steel is $\sigma_Y = 650$ MPa.

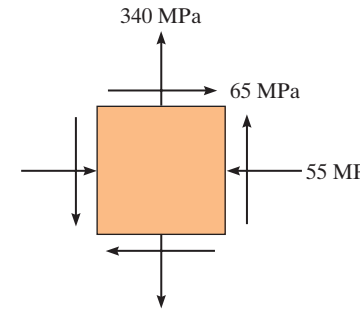

$\sigma_x = -55$ MPa $\quad \sigma_y = 340$ MPa $\quad \tau_{xy} = 65$ MPa

$$\sigma_{1,2} = \frac{\sigma_x + \sigma_y}{2} \pm \sqrt{\left(\frac{\sigma_x - \sigma_y}{2}\right)^2 + \tau_{xy}{}^2}$$

$$= \frac{-55 + 340}{2} \pm \sqrt{\left(\frac{-55 - 340}{2}\right)^2 + 65^2}$$

$\sigma_1 = 350.42$ MPa $\quad \sigma_2 = -65.42$ MPa

$$(\sigma_1{}^2 - \sigma_1\sigma_2 + \sigma_2) = [350.42^2 - 350.42(-65.42) + (-65.42)^2]$$

$$= 150\,000 < \sigma_Y^2 = 422\,500 \qquad \textbf{OK}$$

No. **Ans.**

Ans:
No.

10–98. The 60° strain rosette is mounted on a beam. The following readings are obtained for each gauge: $\epsilon_a = 600(10^{-6})$, $\epsilon_b = -700(10^{-6})$, and $\epsilon_c = 350(10^{-6})$. Determine (a) the in-plane principal strains and (b) the maximum in-plane shear strain and average normal strain. In each case show the deformed element due to these strains.

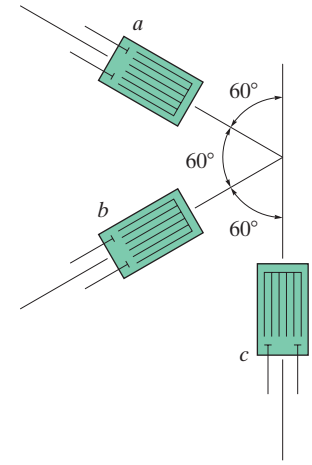

Strain Rosettes (60°): Applying Eq. 10-15 with $\epsilon_x = 600\left(10^{-6}\right)$,

$\epsilon_b = -700\left(10^{-6}\right), \epsilon_c = 350\left(10^{-6}\right), \theta_a = 150°, \theta_b = -150°$ and $\theta_c = -90°$,

$$350\left(10^{-6}\right) = \epsilon_x \cos^2(-90°) + \epsilon_y \sin^2(-90°) + \gamma_{xy} \sin(-90°)\cos(-90°)$$

$$\epsilon_y = 350\left(10^{-6}\right)$$

$$600\left(10^{-6}\right) = \epsilon_x \cos^2 150° + 350\left(10^{-6}\right)\sin^2 150° + \gamma_{xy} \sin 150° \cos 150°$$

$$512.5\left(10^{-6}\right) = 0.75\,\epsilon_x - 0.4330\,\gamma_{xy} \qquad \textbf{[1]}$$

$$-700\left(10^{-6}\right) = \epsilon_x \cos^2(-150°) + 350\left(10^{-6}\right)\sin^2(-150°) + \gamma_{xy} \sin(-150°)\cos(-150°)$$

$$-787.5\left(10^{-6}\right) = 0.75\epsilon_x + 0.4330\,\gamma_{xy} \qquad \textbf{[2]}$$

Solving Eq. [1] and [2] yields $\epsilon_x = -183.33\left(10^{-6}\right) \qquad \gamma_{xy} = -1501.11\left(10^{-6}\right)$

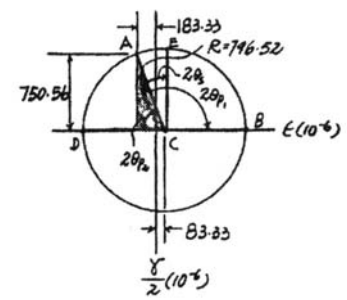

Construction of the Circle: With $\epsilon_x = -183.33\left(10^{-6}\right)$, $\epsilon_y = 350\left(10^{-6}\right)$, and $\dfrac{\gamma_{xy}}{2} = -750.56\left(10^{-6}\right)$.

$$\epsilon_{\text{avg}} = \frac{\epsilon_x + \epsilon_y}{2} = \left(\frac{-183.33 + 350}{2}\right)\left(10^{-6}\right) = 83.3\left(10^{-6}\right) \qquad \textbf{Ans.}$$

The coordinates for reference points A and C are

$$A(-183.33, -750.56)\left(10^{-6}\right) \qquad C(83.33, 0)\left(10^{-6}\right)$$

The radius of the circle is

$$R = \left(\sqrt{(183.33 + 83.33)^2 + 750.56^2}\right)\left(10^{-6}\right) = 796.52\left(10^{-6}\right)$$

a)

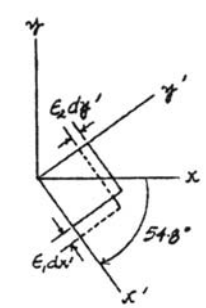

In-Plane Principal Strain: The coordinates of points B and D represent ϵ_1 and ϵ_2, respectively.

$$\epsilon_1 = (83.33 + 796.52)\left(10^{-6}\right) = 880\left(10^{-6}\right) \qquad \textbf{Ans.}$$

$$\epsilon_2 = (83.33 - 796.52)\left(10^{-6}\right) = -713\left(10^{-6}\right) \qquad \textbf{Ans.}$$

Orientation of Principal Strain: From the circle,

$$\tan 2\theta_{P1} = \frac{750.56}{183.33 + 83.33} = 2.8145 \qquad 2\theta_{P2} = 70.44°$$

$$2\theta_{P1} = 180° - 2\theta_{P2}$$

$$\theta_P = \frac{180° - 70.44°}{2} = 54.8° \quad (\textit{Clockwise}) \qquad \textbf{Ans.}$$

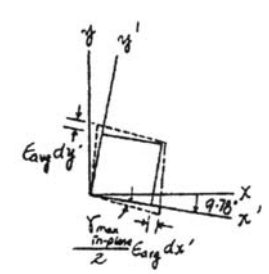

10–98. Continued

b)

Maximum In-Plane Shear Strain: Represented by the coordinates of point E on the circle.

$$\frac{\gamma_{\substack{\text{max}\\ \text{in-plane}}}}{2} = -R = -796.52\left(10^{-6}\right)$$

$$\gamma_{\substack{\text{max}\\ \text{in-plane}}} = -1593\left(10^{-6}\right) \qquad \textbf{Ans.}$$

Orientation of Maximum In-Plane Shear Strain: From the circle.

$$\tan 2\theta_s = \frac{183.33 + 83.33}{750.56} = 0.3553$$

$$\theta_s = 9.78^\circ \ (\textit{Clockwise}) \qquad \textbf{Ans.}$$

Ans:
$\epsilon_{\text{avg}} = 83.3(10^{-6})$, $\epsilon_1 = 880(10^{-6})$,
$\epsilon_2 = -713(10^{-6})$, $\theta_p = 54.8^\circ$ (clockwise),
$\gamma_{\substack{\text{max}\\ \text{in-plane}}} = -1593(10^{-6})$,
$\theta_s = 9.78^\circ$ (clockwise)

10–99. The state of strain at the point on the bracket has components $\epsilon_x = 350(10^{-6})$, $\epsilon_y = -860(10^{-6})$, $\gamma_{xy} = 250(10^{-6})$. Use the strain-transformation equations to determine the equivalent in-plane strains on an element oriented at an angle of $\theta = 45°$ clockwise from the original position. Sketch the deformed element within the x–y plane due to these strains.

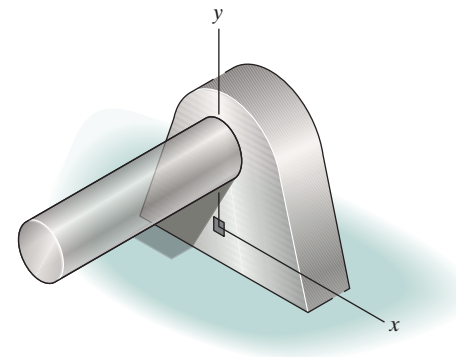

$\epsilon_x = 350(10^{-6}) \quad \epsilon_y = -860(10^{-6}) \quad \gamma_{xy} = 250(10^{-6}) \quad \theta = -45°$

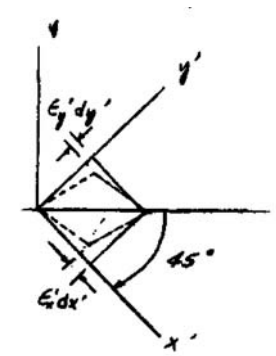

$$\epsilon_{x'} = \frac{\epsilon_x + \epsilon_y}{2} + \frac{\epsilon_x - \epsilon_y}{2}\cos 2\theta + \frac{\gamma_{xy}}{2}\sin 2\theta$$

$$= \left[\frac{350 - 860}{2} + \frac{350 - (-860)}{2}\cos(-90°) + \frac{250}{2}\sin(-90°)\right](10^{-6}) = -380(10^{-6}) \quad \textbf{Ans.}$$

$$\epsilon_{y'} = \frac{\epsilon_x + \epsilon_y}{2} - \frac{\epsilon_x - \epsilon_y}{2}\cos 2\theta - \frac{\gamma_{xy}}{2}\sin 2\theta$$

$$= \left[\frac{350 - 860}{2} - \frac{350 - (-860)}{2}\cos(-90°) - \frac{250}{2}\sin(-90°)\right](10^{-6}) = -130(10^{-6}) \quad \textbf{Ans.}$$

$$\frac{\gamma_{x'y'}}{2} = -\frac{\epsilon_x - \epsilon_y}{2}\sin 2\theta + \frac{\gamma}{2}\cos 2\theta$$

$$\gamma_{x'y'} = 2\left[-\left(\frac{350 - (-860)}{2}\right)\sin(-90°) + \frac{250}{2}\cos(-90°)\right](10^{-6}) = 1.21(10^{-3}) \quad \textbf{Ans.}$$

Ans:
$\epsilon_{x'} = -380(10^{-6})$, $\epsilon_{y'} = -130(10^{-6})$,
$\gamma_{x'y'} = 1.21(10^{-3})$

***10–100.** The A-36 steel post is subjected to the forces shown. If the strain gauges a and b at point A give readings of $\epsilon_a = 300(10^{-6})$ and $\epsilon_b = 175(10^{-6})$, determine the magnitudes of $\mathbf{P}_1$ and $\mathbf{P}_2$.

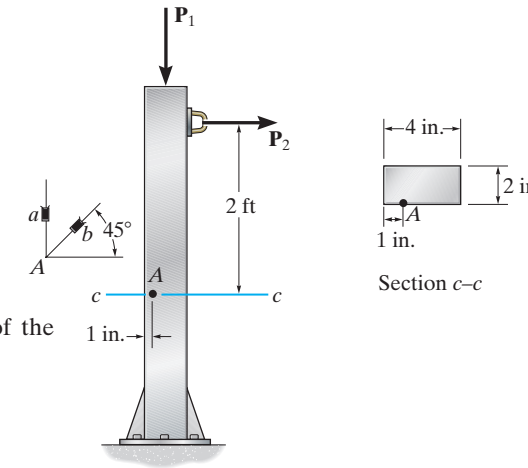

Internal Loadings: Considering the equilibrium of the free-body diagram of the post's segment, Fig. a,

$$\overset{+}{\rightarrow} \Sigma F_x = 0; \qquad P_2 - V = 0 \qquad V = P_2$$

$$+\uparrow \Sigma F_y = 0; \qquad N - P_1 = 0 \qquad N = P_1$$

$$\circlearrowleft + \Sigma M_O = 0; \qquad M + P_2(2) = 0 \qquad M = 2P_2$$

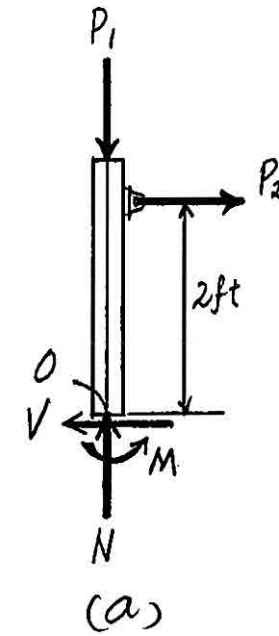

Section Properties: The cross-sectional area and the moment of inertia about the bending axis of the post's cross-section are

$$A = 4(2) = 8 \text{ in}^2$$

$$I = \frac{1}{12}(2)\left(4^3\right) = 10.667 \text{ in}^4$$

Referring to Fig. b,

$$\left(Q_y\right)_A = \bar{x}'A' = 1.5(1)(2) = 3 \text{ in}^3$$

Normal and Shear Stress: The normal stress is a combination of axial and bending stress.

$$\sigma_A = \frac{N}{A} + \frac{Mx_A}{I} = -\frac{P_1}{8} + \frac{2P_2(12)(1)}{10.667} = 2.25P_2 - 0.125P_1$$

The shear stress is caused by transverse shear stress.

$$\tau_A = \frac{VQ_A}{It} = \frac{P_2(3)}{10.667(2)} = 0.140625P_2$$

Thus, the state of stress at point A is represented on the element shown in Fig. c.

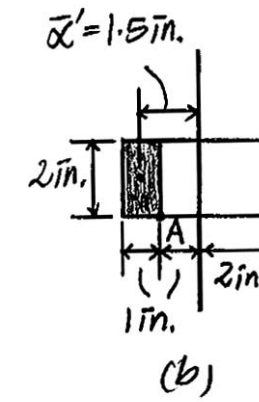

Normal and Shear Strain: With $\theta_a = 90°$ and $\theta_b = 45°$, we have

$$\epsilon_a = \epsilon_x \cos^2\theta_a + \epsilon_y \sin^2\theta_a + \gamma_{xy} \sin\theta_a \cos\theta_a$$

$$300\left(10^{-6}\right) = \epsilon_x \cos^2 90° + \epsilon_y \sin^2 90° + \gamma_{xy} \sin 90° \cos 90°$$

$$\epsilon_y = 300\left(10^{-6}\right)$$

$$\epsilon_b = \epsilon_x \cos^2\theta_b + \epsilon_y \sin^2\theta_b + \gamma_{xy} \sin\theta_b \cos\theta_b$$

$$175\left(10^{-6}\right) = \epsilon_x \cos^2 45° + 300\left(10^{-6}\right) \sin^2 45° + \gamma_{xy} \sin 45° \cos 45°$$

$$\epsilon_x + \gamma_{xy} = 50\left(10^{-6}\right) \qquad (1)$$

10–100. Continued

Since $\sigma_y = \sigma_z = 0, \epsilon_x = -\nu\epsilon_y = -0.32(300)\left(10^{-6}\right) = -96\left(10^{-6}\right)$

Then Eq. (1) gives

$$\gamma_{xy} = 146\left(10^{-6}\right)$$

Stress and Strain Relation: Hooke's Law for shear gives

$$\tau_x = G\gamma_{xy}$$

$$0.140625P_2 = 11.0\left(10^3\right)\left[146\left(10^{-6}\right)\right]$$

$$P_2 = 11.42 \text{ kip} = 11.4 \text{ kip}$$ **Ans.**

Since $\sigma_y = \sigma_z = 0$, Hooke's Law gives

$$\sigma_y = E\epsilon_y$$

$$2.25(11.42) - 0.125P_1 = 29.0\left(10^3\right)\left[300\left(10^{-6}\right)\right]$$

$$P_1 = 136 \text{ kip}$$ **Ans.**

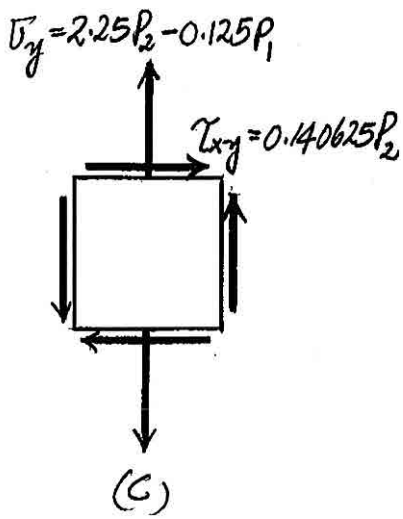

10–101. A differential element is subjected to plane strain that has the following components; $\epsilon_x = 950(10^{-6})$, $\epsilon_y = 420(10^{-6})$, $\gamma_{xy} = -325(10^{-6})$. Use the strain-transformation equations and determine (a) the principal strains and (b) the maximum in plane shear strain and the associated average strain. In each case specify the orientation of the element and show how the strains deform the element.

$$\epsilon_{1,2} = \frac{\epsilon_x + \epsilon_y}{2} \pm \sqrt{\left(\frac{\epsilon_x - \epsilon_y}{2}\right)^2 + \gamma_{xy}{}^2}$$

$$= \left[\frac{950 + 420}{2} \pm \sqrt{\left(\frac{950 - 420}{2}\right)^2 + \left(\frac{-325}{2}\right)^2}\right](10^{-6})$$

$$\epsilon_1 = 996(10^{-6}) \qquad \textbf{Ans.}$$

$$\epsilon_2 = 374(10^{-6}) \qquad \textbf{Ans.}$$

Orientation of ϵ_1 and ϵ_2 :

$$\tan 2\theta_P = \frac{\gamma_{xy}}{\epsilon_x - \epsilon_y} = \frac{-325}{950 - 420}$$

$$\theta_P = -15.76°, 74.24°$$

Use Eq. 10.5 to determine the direction of ϵ_1 and ϵ_2.

$$\epsilon_{x'} = \frac{\epsilon_x + \epsilon_y}{2} + \frac{\epsilon_x - \epsilon_y}{2} \cos 2\theta + \frac{\gamma_{xy}}{2} \sin 2\theta$$

$$\theta = \theta_P = -15.76°$$

$$\epsilon_{x'} = \left\{\frac{950 + 420}{2} + \frac{950 - 420}{2} \cos(-31.52°) + \frac{(-325)}{2} \sin(-31.52°)\right\}(10^{-6}) = 996(10^{-6})$$

$$\theta_{P1} = -15.8° \qquad \textbf{Ans.}$$

$$\theta_{P2} = 74.2° \qquad \textbf{Ans.}$$

b)

$$\frac{\gamma_{\substack{\text{max}\\ \text{in-plane}}}}{2} = \sqrt{\left(\frac{\epsilon_x - \epsilon_y}{2}\right)^2 + \left(\frac{\gamma_{xy}}{2}\right)^2}$$

$$\gamma_{\substack{\text{max}\\ \text{in-plane}}} = 2\left[\sqrt{\left(\frac{950 - 420}{2}\right)^2 + \left(\frac{-325}{2}\right)^2}\right](10^{-6}) = 622(10^{-6}) \qquad \textbf{Ans.}$$

$$\epsilon_{\text{avg}} = \frac{\epsilon_x + \epsilon_y}{2} = \left(\frac{950 + 420}{2}\right)(10^{-6}) = 685(10^{-6}) \qquad \textbf{Ans.}$$

10–101. Continued

Orientation of $\gamma_{\max}$:

$$\tan 2\theta_P = \frac{-(\epsilon_x - \epsilon_y)}{\gamma_{xy}} = \frac{-(950 - 420)}{-325}$$

$\theta_P = 29.2°$ and $\theta_P = 119°$ **Ans.**

Use Eq. 10.6 to determine the sign of $\gamma_{\substack{\max \\ \text{in-plane}}}$:

$$\frac{\gamma_{x'y'}}{2} = -\frac{\epsilon_x - \epsilon_y}{2} \sin 2\theta + \frac{\gamma_{xy}}{2} \cos 2\theta$$

$$\theta = \theta_s = 29.2°$$

$$\gamma_{x'y'} = 2\left[\frac{-(950 - 420)}{2} \sin (58.4°) + \frac{-325}{2} \cos (58.4°)\right](10^{-6})$$

$$\gamma_{xy} = -622(10^{-6})$$

Ans:
$\epsilon_1 = 996(10^{-6})$, $\epsilon_2 = 374(10^{-6})$, $\theta_{p1} = -15.8$,
$\theta_{p2} = 74.2$, $\gamma_{\substack{\max \\ \text{in-plane}}} = 622(10^{-6})$,
$\epsilon_{\text{avg}} = 685(10^{-6})$, $\theta_s = 29.2°$ and $119°$

10–102. The state of strain at the point on the bracket has components $\epsilon_x = -130(10^{-6})$, $\epsilon_y = 280(10^{-6})$, $\gamma_{xy} = 75(10^{-6})$. Use the strain-transformation equations to determine (a) the in-plane principal strains and (b) the maximum in-plane shear strain and average normal strain. In each case specify the orientation of the element and show how the strains deform the element within the x–y plane.

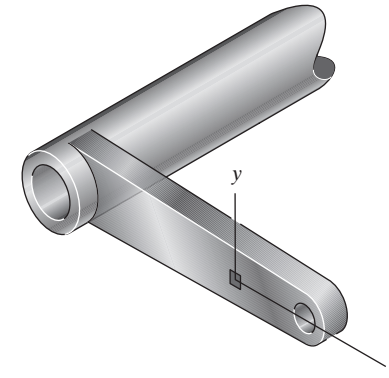

$\epsilon_x = -130(10^{-6})$ $\quad \epsilon_y = 280(10^{-6})$ $\quad \gamma_{xy} = 75(10^{-6})$

a)

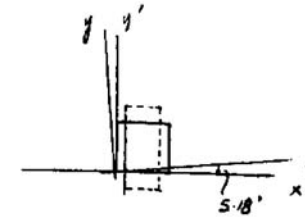

$$\epsilon_{1,2} = \frac{\epsilon_x + \epsilon_y}{2} \pm \sqrt{\left(\frac{\epsilon_x - \epsilon_y}{2}\right)^2 + \left(\frac{\gamma_{xy}}{2}\right)^2}$$

$$= \left[\frac{-130 + 280}{2} \pm \sqrt{\left(\frac{-130 - 280}{2}\right)^2 + \left(\frac{75}{2}\right)^2}\right](10^{-6})$$

$\epsilon_1 = 283(10^{-6})$ **Ans.** $\qquad \epsilon_2 = -133(10^{-6})$ **Ans.**

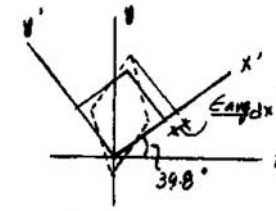

Orientation of ϵ_1 and ϵ_2:

$$\tan 2\theta_p = \frac{\gamma_{xy}}{\epsilon_x - \epsilon_y} = \frac{75}{-130 - 280}$$

$\theta_p = -5.18°$ $\quad$ and $\quad$ $84.82°$

Use Eq. 10–5 to determine the direction of ϵ_1 and ϵ_2:

$$\epsilon_{x'} = \frac{\epsilon_x + \epsilon_y}{2} + \frac{\epsilon_x - \epsilon_y}{2}\cos 2\theta + \frac{\gamma_{xy}}{2}\sin 2\theta$$

$\theta = \theta_p = -5.18°$

$$\epsilon_{x'} = \left[\frac{-130 + 280}{2} + \frac{-130 - 280}{2}\cos(-10.37°) + \frac{75}{2}\sin(-10.37°)\right](10^{-6}) = -133(10^{-6})$$

Therefore $\theta_{p1} = 84.8°$ **Ans.** $\qquad \theta_{p2} = -5.18°$ **Ans.**

10–102. Continued

b)

$$\frac{\gamma_{\substack{\max\\ \text{in-plane}}}}{2} = \sqrt{\left(\frac{\epsilon_x - \epsilon_y}{2}\right)^2 + \left(\frac{\gamma_{xy}}{2}\right)^2}$$

$$\gamma_{\substack{\max\\ \text{in-plane}}} = 2\left[\sqrt{\left(\frac{-130 - 280}{2}\right)^2 + \left(\frac{75}{2}\right)^2}\right](10^{-6}) = 417(10^{-6})$$ **Ans.**

$$\epsilon_{\text{avg}} = \frac{\epsilon_x + \epsilon_y}{2} = \left(\frac{-130 + 280}{2}\right)(10^{-6}) = 75.0(10^{-6})$$ **Ans.**

Orientation of $\gamma_{\max}$:

$$\tan 2\theta_s = \frac{-(\epsilon_x - \epsilon_y)}{\gamma_{xy}} = \frac{-(-130 - 280)}{75}$$

$$\theta_s = 39.8^\circ \text{ and } \theta_s = 130^\circ$$ **Ans.**

Use Eq. 10–16 to determine the sign of $\gamma_{\substack{\max\\ \text{in-plane}}}$:

$$\frac{\gamma_{x'y'}}{2} = -\frac{\epsilon_x - \epsilon_y}{2}\sin 2\theta + \frac{\gamma_{xy}}{2}\cos 2\theta; \qquad \theta = \theta_s = 39.8^\circ$$

$$\gamma_{x'y'} = -(-130 - 280)\sin(79.6^\circ) + (75)\cos(79.6^\circ) = 417(10^{-6})$$

Ans:
$\epsilon_1 = 283(10^{-6})$, $\epsilon_2 = -133(10^{-6})$,
$\theta_{p1} = 84.8^\circ$, $\theta_{p2} = -5.18^\circ$, $\gamma_{\substack{\max\\ \text{in-plane}}} = 417(10^{-6})$,
$\epsilon_{\text{avg}} = 75.0(10^{-6})$, $\theta_s = 39.8^\circ$ and 130°

10–103. The state of plain strain on an element is $\epsilon_x = 400(10^{-6})$, $\epsilon_y = 200(10^{-6})$, and $\gamma_{xy} = -300(10^{-6})$. Determine the equivalent state of strain, which represents (a) the principal strains, and (b) the maximum in-plane shear strain and the associated average normal strain. Specify the orientation of the corresponding element at the point with respect to the original element. Sketch the results on the element.

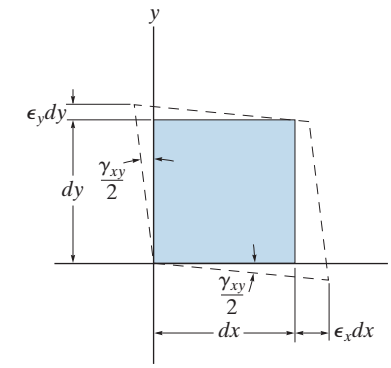

Construction of the Circle: $\epsilon_x = 400\left(10^{-6}\right), \epsilon_y = 200\left(10^{-6}\right)$, and $\frac{\gamma_{xy}}{2} = -150\left(10^{-6}\right)$. Thus,

$$\epsilon_{\text{avg}} = \frac{\epsilon_x + \epsilon_y}{2} = \left(\frac{400 + 200}{2}\right)\left(10^{-6}\right) = 300\left(10^{-6}\right) \qquad \textbf{Ans.}$$

The coordinates for reference points A and the center C of the circle are

$$A(400, -150)\left(10^{-6}\right) \qquad C(300, 0)\left(10^{-6}\right)$$

The radius of the circle is

$$R = CA = \sqrt{(400 - 300)^2 + (-150)^2} = 180.28\left(10^{-6}\right)$$

Using these results, the circle is shown in Fig. *a*.

In-Plane Principal Stresses: The coordinates of points B and D represent ϵ_1 and ϵ_2, respectively. Thus,

$$\epsilon_1 = (300 + 180.28)\left(10^{-6}\right) = 480\left(10^{-6}\right) \qquad \textbf{Ans.}$$

$$\epsilon_2 = (300 - 180.28)\left(10^{-6}\right) = 120\left(10^{-6}\right) \qquad \textbf{Ans.}$$

Orientation of Principal Plane: Referring to the geometry of the circle,

$$\tan 2\left(\theta_p\right)_1 = \frac{150}{400 - 300} = 1.5$$

$$\left(\theta_p\right)_1 = 28.2^\circ \text{ (clockwise)} \qquad \textbf{Ans.}$$

The deformed element for the state of principal strains is shown in Fig. *b*.

Maximum In-Plane Shear Stress: The coordinates of point E represent ϵ_{avg} and $\gamma_{\substack{\text{max}\\ \text{in-plane}}}$. Thus

$$\frac{\gamma_{\substack{\text{max}\\ \text{in-plane}}}}{2} = -R = -180.28\left(10^{-6}\right)$$

$$\gamma_{\substack{\text{max}\\ \text{in-plane}}} = -361\left(10^{-6}\right) \qquad \textbf{Ans.}$$

Orientation of the Plane of Maximum In-plane Shear Strain: Referring to the geometry of the circle,

$$\tan 2\theta_s = \frac{400 - 300}{150} = 0.6667$$

$$\theta_S = 16.8^\circ \text{ (counterclockwise)} \qquad \textbf{Ans.}$$

The deformed element for the state of maximum In-plane shear strain is shown in Fig. *c*.

10–103. Continued

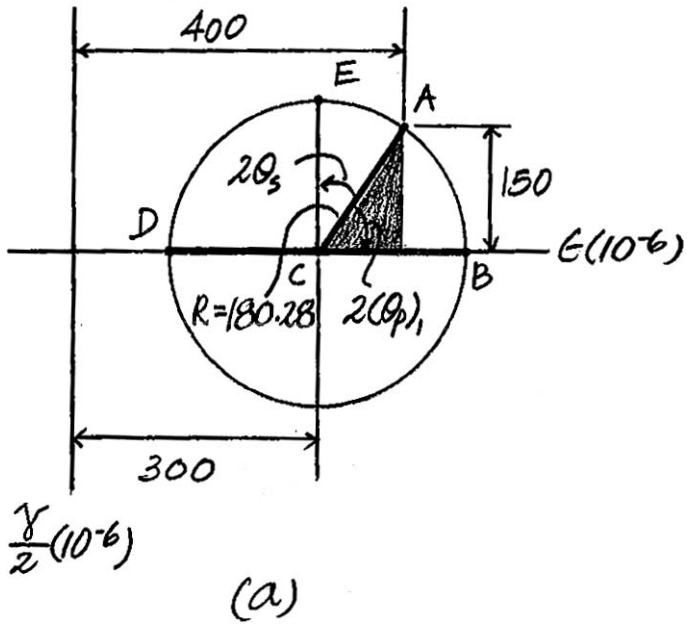

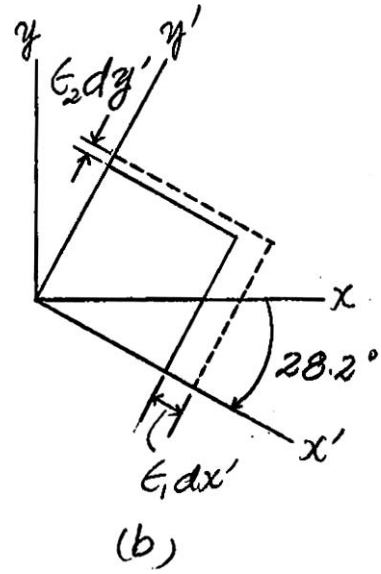

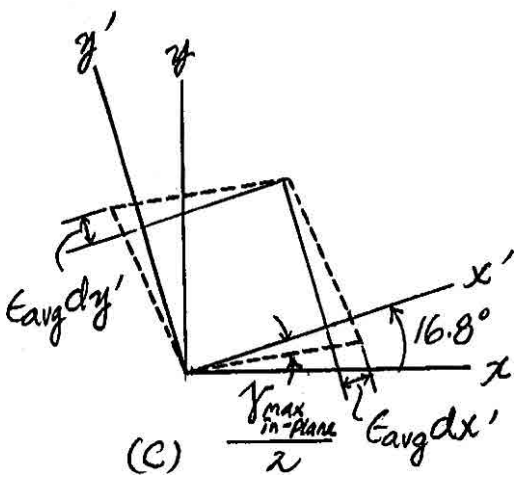

Ans:
$\epsilon_1 = 480(10^{-6})$, $\epsilon_2 = 120(10^{-6})$,
$\theta_{p1} = -28.2°$ (clockwise),
$\gamma_{\substack{max \\ in\text{-}plane}} = -361(10^{-6})$,
$\theta_s = 16.8°$ (counterclockwise),
$\epsilon_{avg} = 300(10^{-6})$

11–1. The simply supported beam is made of timber that has an allowable bending stress of $\sigma_{allow} = 6.5$ MPa and an allowable shear stress of $\tau_{allow} = 500$ kPa. Determine its dimensions if it is to be rectangular and have a height-to-width ratio of 1.25.

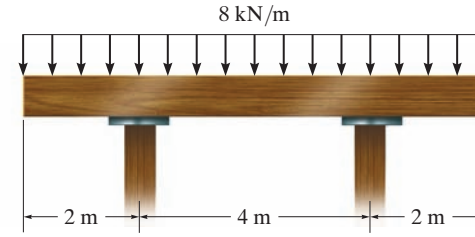

$$I_x = \frac{1}{12}(b)(1.25b)^3 = 0.16276b^4$$

$$Q_{max} = \bar{y}'A' = (0.3125b)(0.625b)(b) = 0.1953125b^3$$

Assume bending moment controls:

$$M_{max} = 16 \text{ kN} \cdot \text{m}$$

$$\sigma_{allow} = \frac{M_{max}\, c}{I}$$

$$6.5(10^6) = \frac{16(10^3)(0.625b)}{0.16276b^4}$$

$$b = 0.21143 \text{ m} = 211 \text{ mm}$$ **Ans.**

$$h = 1.25b = 264 \text{ mm}$$ **Ans.**

Check shear:

$$Q_{max} = 1.846159(10^{-3}) \text{ m}^3$$

$$I = 0.325248(10^{-3}) \text{ m}^4$$

$$\tau_{max} = \frac{VQ_{max}}{It} = \frac{16(10^3)(1.846159)(10^{-3})}{0.325248(10^{-3})(0.21143)} = 429 \text{ kPa} < 500 \text{ kPa, OK}$$

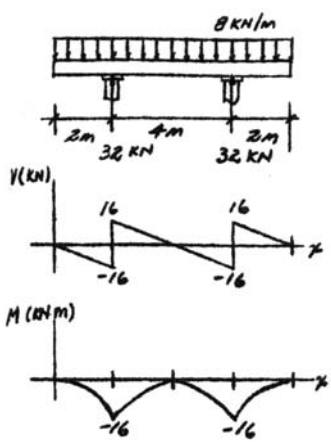

Ans:
$b = 211$ mm, $h = 264$ mm

11–2. Determine the minimum width of the beam to the nearest $\frac{1}{4}$ in. that will safely support the loading of $P = 8$ kip. The allowable bending stress is $\sigma_{\text{allow}} = 24$ ksi and the allowable shear stress is $\tau_{\text{allow}} = 15$ ksi.

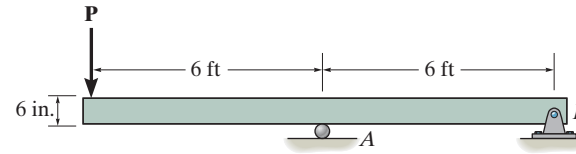

Beam design: Assume moment controls.

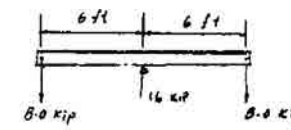

$$\sigma_{\text{allow}} = \frac{Mc}{I}; \qquad 24 = \frac{48.0(12)(3)}{\frac{1}{12}(b)(6^3)}$$

$b = 4$ in. **Ans.**

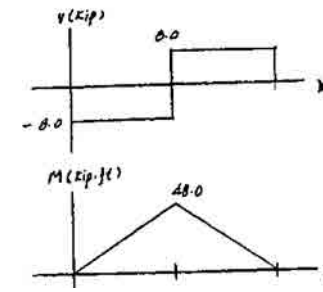

Check shear:

$$\tau_{\max} = \frac{VQ}{It} = \frac{8(1.5)(3)(4)}{\frac{1}{12}(4)(6)^3(4)} = 0.5 \text{ ksi} < 15 \text{ ksi} \quad \text{OK}$$

Ans:
Use $b = 4$ in.

11–3. Solve Prob. 11–2 if $P = 10$ kip.

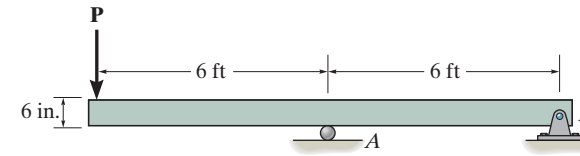

Beam design: Assume moment controls.

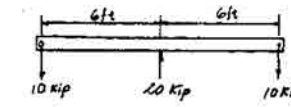

$$\sigma_{\text{allow}} = \frac{Mc}{I}; \qquad 24 = \frac{60(12)(3)}{\frac{1}{12}(b)(6^3)}$$

$b = 5$ in. **Ans.**

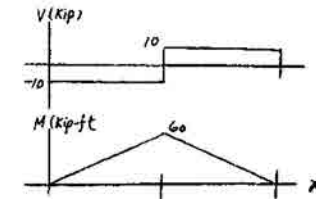

Check shear:

$$\tau_{\max} = \frac{VQ}{It} = \frac{10(1.5)(3)(5)}{\frac{1}{12}(5)(6)^3(5)} = 0.5 \text{ ksi} < 15 \text{ ksi} \quad \text{OK}$$

Ans:
Use $b = 5$ in.

***11–4.** The brick wall exerts a uniform distributed load of 1.20 kip/ft on the beam. If the allowable bending stress is $\sigma_{allow} = 22$ ksi and the allowable shear stress is $\tau_{allow} = 12$ ksi, select the lightest wide-flange section with the shortest depth from Appendix B that will safely support the load. If there are several choices of equal weight, choose the one with the shortest height.

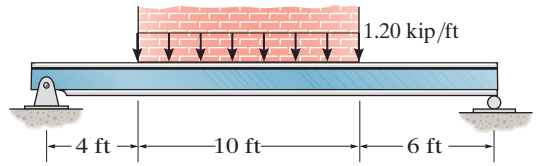

Bending Stress: From the moment diagram, $M_{max} = 44.55$ kip · ft. Assuming bending controls the design and applying the flexure formula.

$$S_{req\ d} = \frac{M_{max}}{\sigma_{allow}}$$

$$= \frac{44.55\ (12)}{22} = 24.3\ \text{in}^3$$

Two choices of wide flange section having the weight 22 lb/ft can be made. They are W12 × 22 and W14 × 22. However, W12 × 22 is the shortest.

Select W12 × 22 $\left(S_x = 25.4\ \text{in}^3,\ d = 12.31\ \text{in.},\ t_w = 0.260\ \text{in.}\right)$

Shear Stress: Provide a shear stress check using $\tau = \dfrac{V}{t_w\, d}$ for the W12 × 22 wide-flange section. From the shear diagram, $V_{max} = 6.60$ kip.

$$\tau_{max} = \frac{V_{max}}{t_w\, d}$$

$$= \frac{6.60}{0.260(12.31)}$$

$$= 2.06\ \text{ksi} < \tau_{allow} = 12\ \text{ksi (O.K!)}$$

Hence, **Use** W12 × 22 **Ans.**

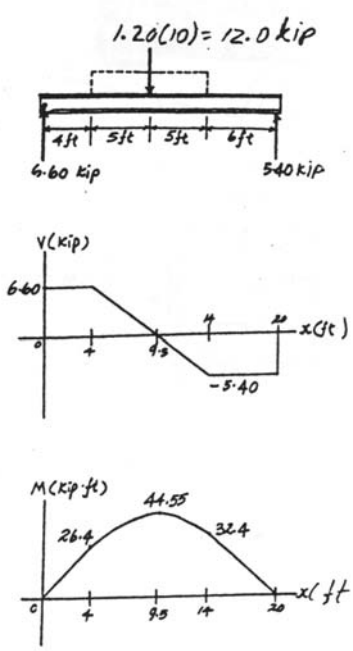

11–5. Select the lightest-weight steel wide-flange beam from Appendix B that will safely support the machine loading shown. The allowable bending stress is $\sigma_{allow} = 24$ ksi and the allowable shear stress is $\tau_{allow} = 14$ ksi.

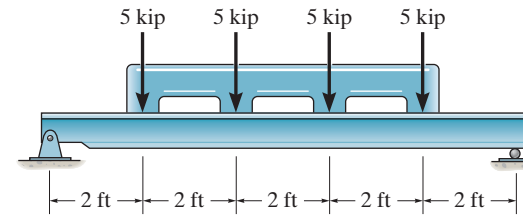

Bending Stress: From the moment diagram, $M_{max} = 30.0$ kip · ft. Assume bending controls the design. Applying the flexure formula.

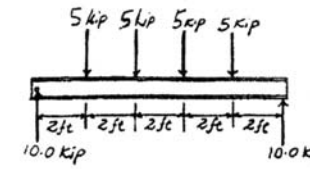

$$S_{req'd} = \frac{M_{max}}{\sigma_{allow}}$$

$$= \frac{30.0(12)}{24} = 15.0 \text{ in}^3$$

Select W12 × 16 $\left(S_x = 17.1 \text{ in}^3, d = 11.99 \text{ in.}, t_w = 0.220 \text{ in.}\right)$

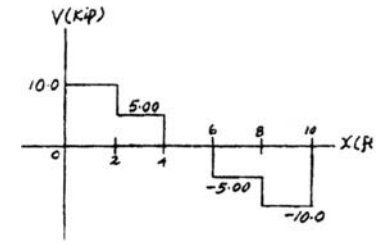

Shear Stress: Provide a shear stress check using $\tau = \dfrac{V}{t_w d}$ for the W12 × 16 wide-flange section. From the shear diagram, $V_{max} = 10.0$ kip

$$\tau_{max} = \frac{V_{max}}{t_w d}$$

$$= \frac{10.0}{0.220(11.99)}$$

$$= 3.79 \text{ ksi} < \tau_{allow} = 14 \text{ ksi (O.K!)}$$

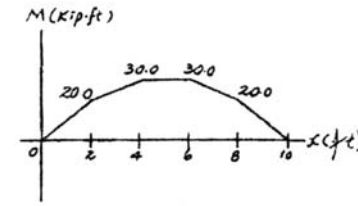

Hence,

Use W12 × 16 **Ans.**

Ans:
Use W12 × 16

11–6. The spreader beam AB is used to slowly lift the 3000-lb pipe that is centrally located on the straps at C and D. If the beam is a W12 × 45, determine if it can safely support the load. The allowable bending stress is $\sigma_{\text{allow}} = 22$ ksi and the allowable shear stress is $\tau_{\text{allow}} = 12$ ksi.

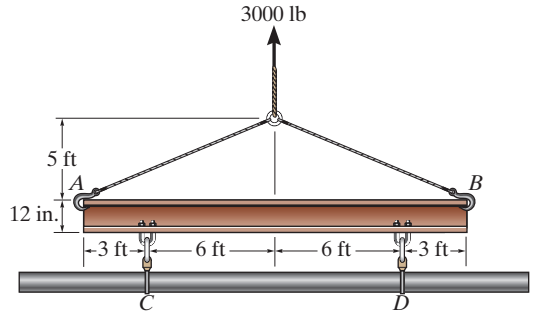

$$h = \frac{1500}{\tan 29.055°} = 2700 \text{ lb}$$

$$\sigma = \frac{M}{S}; \qquad \sigma = \frac{5850(12)}{58.1} = 1.21 \text{ ksi} < 22 \text{ ksi} \qquad \text{OK}$$

$$\tau = \frac{V}{A_{web}}; \qquad \tau = \frac{1500}{(12.06)(0.335)} = 371 \text{ psi} < 12 \text{ ksi} \quad \text{OK}$$

Yes.

Ans.

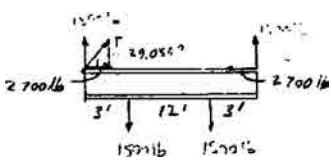

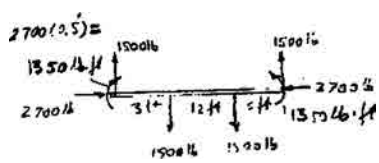

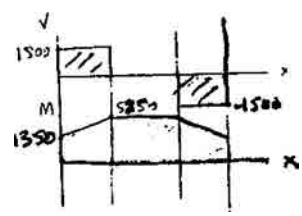

Ans:
Yes.

11–7. Draw the shear and moment diagrams for the W12 × 14 beam and check if the beam will safely support the loading. Take $\sigma_{allow} = 22$ ksi and $\tau_{allow} = 12$ ksi.

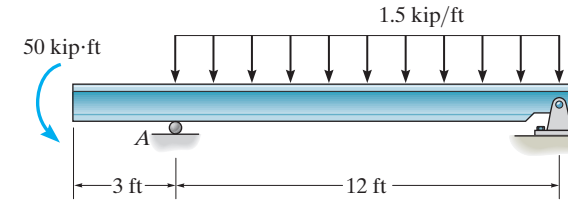

Bending Stress: From the moment diagram, $M_{max} = 50.0$ kip · ft. Applying the flexure formula with $S = 14.9$ in^3 for a wide-flange section W12 × 14.

$$\sigma_{max} = \frac{M_{max}}{S}$$

$$= \frac{50.0(12)}{14.9} = 40.27 \text{ ksi} > \sigma_{allow} = 22 \text{ ksi } (\textit{No Good!})$$

Shear Stress: From the shear diagram, $V_{max} = 13.17$ kip. Using $\tau = \dfrac{V}{t_w d}$ where $d = 11.91$ in. and $t_w = 0.20$ in. for W12 × 14 wide flange section.

$$\tau_{max} = \frac{V_{max}}{t_w d}$$

$$= \frac{13.17}{0.20(11.91)}$$

$$= 5.53 \text{ ksi} < \tau_{allow} = 12 \text{ ksi} \quad (\textit{O.K!})$$

Hence, the wide flange section W12 × 14 fails due to the bending stress and will not safely support the loading. **Ans.**

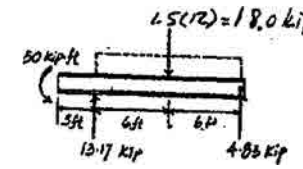

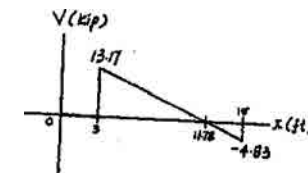

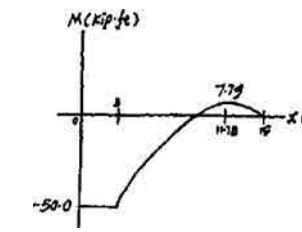

Ans:
No.

***11–8.** The simply supported beam is made of timber that has an allowable bending stress of $\sigma_{\text{allow}} = 1.20$ ksi and an allowable shear stress of $\tau_{\text{allow}} = 100$ psi. Determine its smallest dimensions to the nearest $\frac{1}{8}$ in. if it is rectangular and has a height-to-width ratio of 1.5.

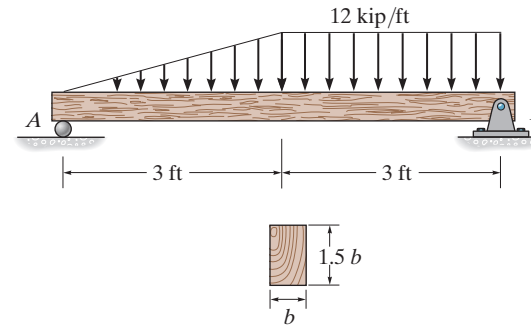

The moment of inertia of the beam's cross section about the neutral axis is $I = \frac{1}{12}(b)(1.5b)^3 = 0.28125b^4$. Referring to the moment diagram, $M_{\max} = 45.375$ kip · ft.

$$\sigma_{\text{allow}} = \frac{M_{\max}\, c}{I}; \qquad 1.2 = \frac{45.375(12)(0.75b)}{0.28125b^4}$$

$$b = 10.66 \text{ in.}$$

Referring to Fig. b, $Q_{\max} = \bar{y}'A' = 0.375b\,(0.75b)(b) = 0.28125b^3$. Referring to the shear diagram, Fig. a, $V_{\max} = 33$ kip.

$$\tau_{\max} = \frac{V_{\max}\, Q_{\max}}{It}; \qquad 100 = \frac{33(10^3)(0.28125b^3)}{0.28125b^4(b)}$$

$$b = 18.17 \text{ in. } (\textit{Control!})$$

Thus,

$$\text{Use } b = 18\frac{1}{4} \text{ in.} \qquad \textbf{Ans.}$$

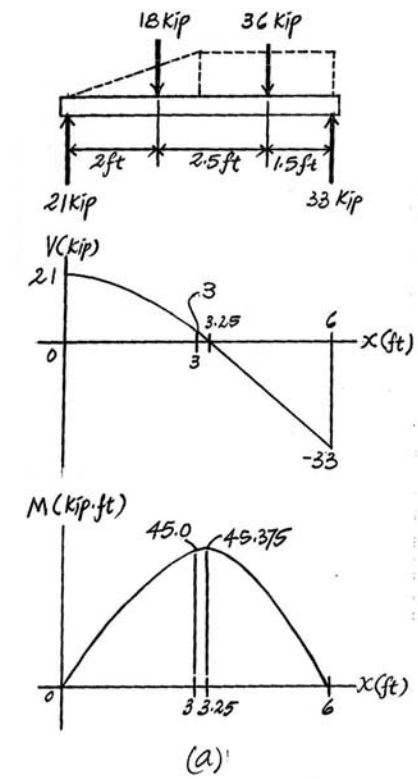

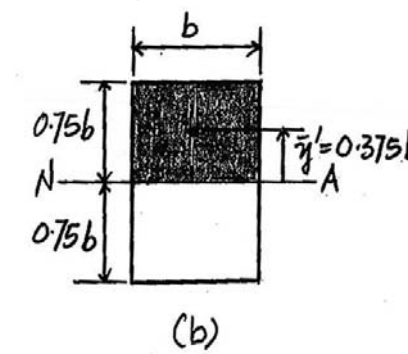

11–9. Select the lightest W360 shape section from Appendix B that can safely support the loading acting on the overhanging beam. The beam is made from steel having an allowable normal stress of $\sigma_{\text{allow}} = 150$ MPa and an allowable shear stress of $\tau_{\text{allow}} = 80$ MPa.

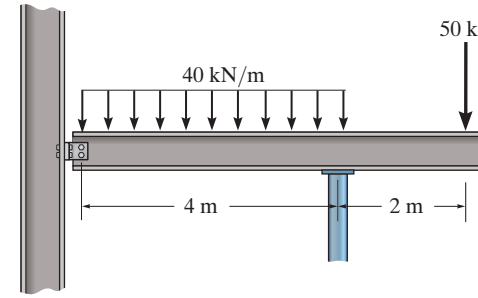

Shear and Moment Diagram: As shown in Fig. *a*.

Bending Stress: Referring to the moment diagram, Fig. *a*, $M_{\max} = 100\ \text{kN}\cdot\text{m}$. Applying the flexure formula,

$$S_{\text{required}} = \frac{M_{\max}}{\sigma_{\text{allow}}} = \frac{100(10^3)}{150(10^6)}$$

$$= 0.6667(10^{-3})\ \text{m}^3 = 666.67(10^3)\ \text{mm}^3$$

Select W360 × 45($S_x = 688(10^3)\ \text{mm}^3$, $d = 352$ mm and $t_w = 6.86$ mm)

Shear Stress: Referring to the shear diagram, Fig. *a*, $V_{\max} = 105$ kN. We have

$$\tau_{\max} = \frac{V_{\max}}{t_w d} = \frac{105(10^3)}{6.86(10^{-3})(0.352)}$$

$$= 43.48\ \text{MPa} < \tau_{\text{allow}} = 80\ \text{MPa}\ \ (\text{OK})$$

Hence, use W360 × 45 **Ans.**

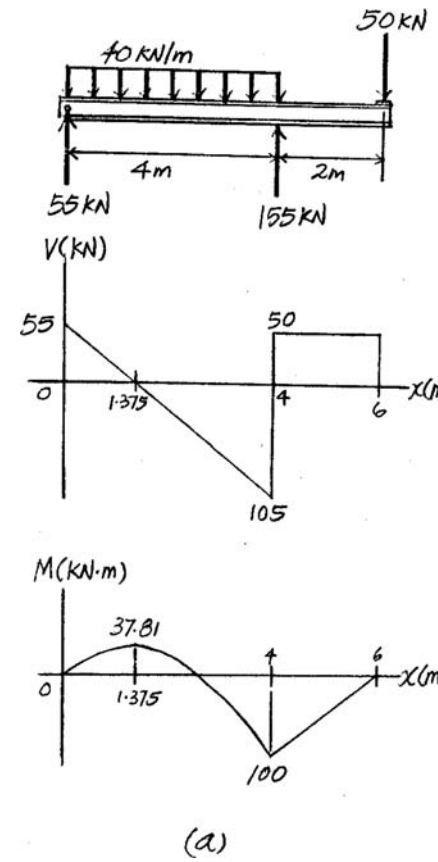

(a)

Ans:
Use W360 × 45

11–10. Investigate if a W250 × 58 shape section can safely support the loading acting on the overhanging beam. The beam is made from steel having an allowable normal stress of $\sigma_{\text{allow}} = 150$ MPa and an allowable shear stress of $\tau_{\text{allow}} = 80$ MPa.

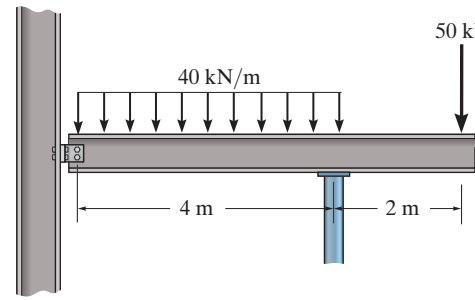

Shear and Moment Diagram: As shown in Fig. *a*,

Bending Stress: Referring to the moment diagram, Fig. *a*, $M_{\max} = 100\ \text{kN}\cdot\text{m}$. For a W250 × 58 section, $S_x = 693(10^3)\ \text{mm}^3 = 0.693(10^{-3})\ \text{m}^4$. Applying the flexure formula,

$$\sigma_{\max} = \frac{M_{\max}}{S_x} = \frac{100(10^3)}{0.693(10^{-3})} = 144.30\ \text{MPa} < \sigma_{\text{allow}} = 150\ \text{MPa} \quad \text{(OK)}$$

Shear Stress: Referring to the shear diagram, Fig. *a*, $V_{\max} = 105$ kN. For a W250 × 58 section, $d = 252$ mm and $t_w = 8.00$ mm. We have

$$\tau_{\max} = \frac{V_{\max}}{t_w d} = \frac{105(10^3)}{8.00(10^{-3})(0.252)}$$

$$= 52.08\ \text{MPa} < \tau_{\text{allow}} = 80\ \text{MPa} \quad \text{(OK)}$$

The W250 × 58 can safely support the loading. **Ans.**

Ans:
Yes.

11–11. The timber beam is to be loaded as shown. If the ends support only vertical forces, determine the greatest magnitude of **P** that can be applied. $\sigma_{allow} = 25$ MPa, $\tau_{allow} = 700$ kPa.

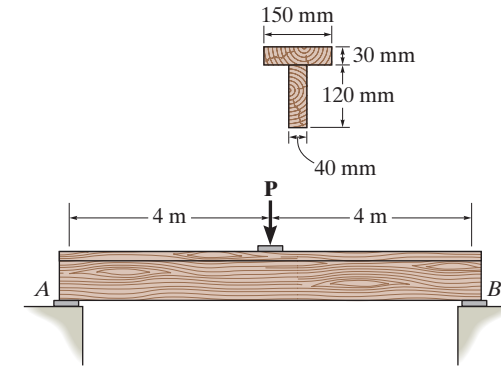

$$\bar{y} = \frac{(0.015)(0.150)(0.03) + (0.09)(0.04)(0.120)}{(0.150)(0.03) + (0.04)(0.120)} = 0.05371 \text{ m}$$

$$I = \frac{1}{12}(0.150)(0.03)^3 + (0.15)(0.03)(0.05371 - 0.015)^2 + \frac{1}{12}(0.04)(0.120)^3 +$$

$$(0.04)(0.120)(0.09 - 0.05371)^2 = 19.162(10^{-6}) \text{ m}^4$$

Maximum moment at center of beam:

$$M_{max} = \frac{P}{2}(4) = 2P$$

$$\sigma = \frac{Mc}{I}; \qquad 25(10^6) = \frac{(2P)(0.15 - 0.05371)}{19.162(10^{-6})}$$

$$P = 2.49 \text{ kN}$$

Maximum shear at end of beam:

$$V_{max} = \frac{P}{2}$$

$$\tau = \frac{VQ}{It}; \qquad 700(10^3) = \frac{\frac{P}{2}\left[\frac{1}{2}(0.15 - 0.05371)(0.04)(0.15 - 0.05371)\right]}{19.162(10^{-6})(0.04)}$$

$$P = 5.79 \text{ kN}$$

Thus,

$$P = 2.49 \text{ kN}$$ **Ans.**

Ans:
$P = 2.49$ kN

***11–12.** The joists of a floor in a warehouse are to be selected using square timber beams made of oak. If each beam is to be designed to carry 90 lb/ft over a simply supported span of 25 ft, determine the dimension a of its square cross section to the nearest $\frac{1}{4}$ in. The allowable bending stress is $\sigma_{\text{allow}} = 4.5$ ksi and the allowable shear stress is $\tau_{\text{allow}} = 125$ psi.

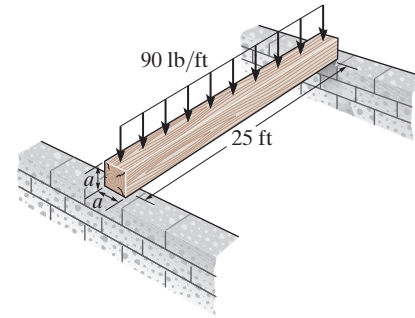

Bending Stress: From the moment diagram, $M_{\max} = 7031.25$ lb · ft. Assume bending controls the design. Applying the flexure formula.

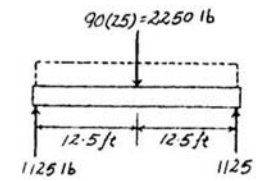

$$\sigma_{\text{allow}} = \frac{M_{\max} c}{I}$$

$$4.5(10^3) = \frac{7031.25(12)(\frac{a}{2})}{\frac{1}{12}a^4}$$

$$a = 4.827 \text{ in.} \qquad \textbf{Ans.}$$

Use $$a = 5 \text{ in.} \qquad \textbf{Ans.}$$

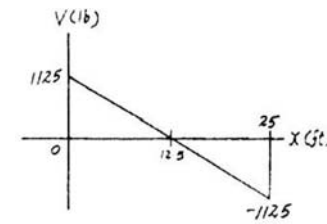

Shear Stress: Provide a shear stress check using the shear formula with $I = \frac{1}{12}(5^4) = 52.083 \text{ in}^4$ and $Q_{\max} = 1.25(2.5)(5) = 15.625 \text{ in}^3$. From the shear diagram, $V_{\max} = 1125$ lb.

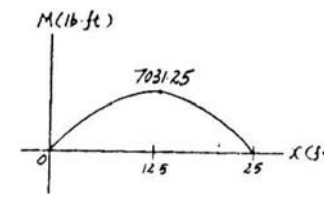

$$\tau_{\max} = \frac{V_{\max} Q_{\max}}{It}$$

$$= \frac{1125(15.625)}{52.083(5)}$$

$$= 67.5 \text{ psi} < \tau_{\text{allow}} = 125 \text{ psi } (O.K!)$$

11–13. Select the lightest steel wide-flange beam from Appendix B that will safely support the loading shown. The allowable bending stress is $\sigma_{\text{allow}} = 22$ ksi and the allowable shear stress is $\tau_{\text{allow}} = 12$ ksi. If there are several choices of equal weight, choose the one with the shortest height.

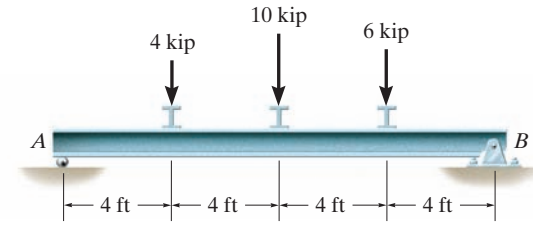

Beam design: Assume bending moment controls.

$$S_{\text{req'd}} = \frac{M_{\max}}{\sigma_{\text{allow}}} = \frac{60.0(12)}{22} = 32.73 \text{ in}^3$$

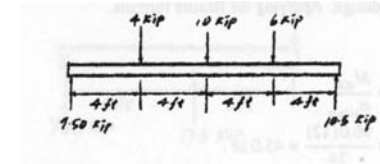

Select a $W\ 12 \times 26$

$S_x = 33.4 \text{ in}^3$, $d = 12.22$ in., $t_w = 0.230$ in.

Check shear:

$$\tau_{\text{avg}} = \frac{V}{A_{\text{web}}} = \frac{10.5}{(12.22)(0.230)} = 3.74 \text{ ksi} < 12 \text{ ksi}$$

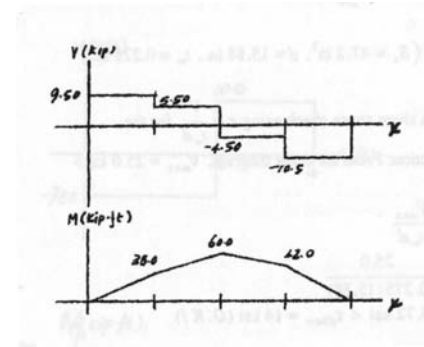

Use $W\ 12 \times 26$ **Ans.**

Ans:
Use W12 × 26

11–14. Select the lightest weight steel wide-flange beam from Appendix B that will safely support the loading shown. The allowable bending stress $\sigma_{allow} = 24$ ksi and the allowable shear stress of $\tau_{allow} = 14$ ksi.

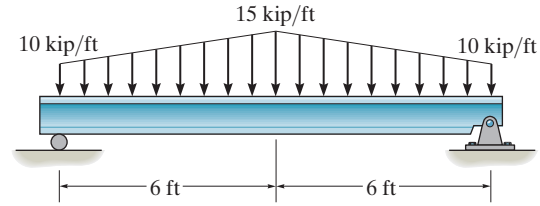

Assume bending controls.

$$M_{max} = 240 \text{ kip} \cdot \text{ft}$$

$$S_{req'd} = \frac{M_{max}}{\sigma_{allow}} = \frac{240(12)}{24} = 120 \text{ in}^3$$

Select a $W\,24 \times 62$,

$$S_x = 131 \text{ in}^3 \qquad d = 23.74 \text{ in.} \qquad t_w = 0.430 \text{ in.}$$

Check shear:

$$\tau_{max} = \frac{V_{max}}{A_w} = \frac{75}{(23.74)(0.430)} = 7.35 \text{ ksi} < 14 \text{ ksi}$$

Use $W\,24 \times 62$ **Ans.**

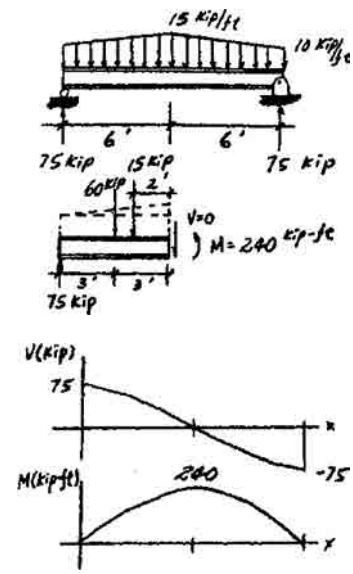

Ans:
Use W24 × 62

11–15. Two acetyl plastic members are to be glued together and used to support the loading shown. If the allowable bending stress for the plastic is $\sigma_{allow} = 13$ ksi and the allowable shear stress is $\tau_{allow} = 4$ ksi, determine the greatest load P that can be supported and specify the required shear stress capacity of the glue.

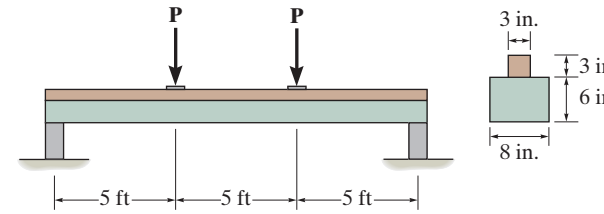

$$M_{max} = P(5)(12) = 60\,P$$

$$V_{max} = P'$$

$$\bar{y} = \frac{\Sigma \bar{y} A}{\Sigma A} = \frac{3(6)(8) + 7.5(3)(3)}{(6)(8) + (3)(3)} = 3.7105 \text{ in.}$$

$$I = \frac{1}{12}(8)(6)^3 + 8(6)(3.7105 - 3)^2 + \frac{1}{12}(3)(3)^3 + 3(3)(7.5 - 3.7105)^2 = 304.22 \text{ in}^4$$

Bending:

$$\sigma = \frac{Mc}{I}; \qquad 13 = \frac{60\,P(9 - 3.7105)}{304.22}$$

$$P = 12.462 = 12.5 \text{ kip}$$

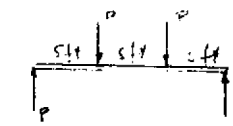

Shear:

$$\tau = \frac{VQ}{It};$$

At neutral axis:

$$4 = \frac{P(3.7105/2)(8)(3.7105)}{304.22(8)}, \qquad P = 177 \text{ kip}$$

Also check just above glue seam.

$$4 = \frac{P(7.5 - 3.7105)(3)(3)}{304.22(3)}, \qquad P = 107 \text{ kip}$$

Bending governs, thus

$P = 12.5$ kip **Ans.**

Glue strength:

$$\tau = \frac{VQ}{It}; \qquad \tau_{req'd} = \frac{12.462(7.5 - 3.7105)(3)(3)}{304.22(3)}$$

$\tau_{req'd} = 466$ psi **Ans.**

Ans:
$P = 12.5$ kip, $\tau_{req'd} = 466$ psi

***11–16.** If the cable is subjected to a maximum force of $P = 50$ kN, select the lightest W310 shape that can safely support the load. The beam is made from steel having an allowable normal stress of $\sigma_{allow} = 150$ MPa and an allowable shear stress of $\tau_{allow} = 85$ MPa.

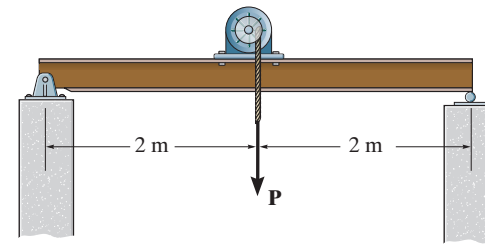

Shear and Moment Diagram: As shown in Fig. *a*,

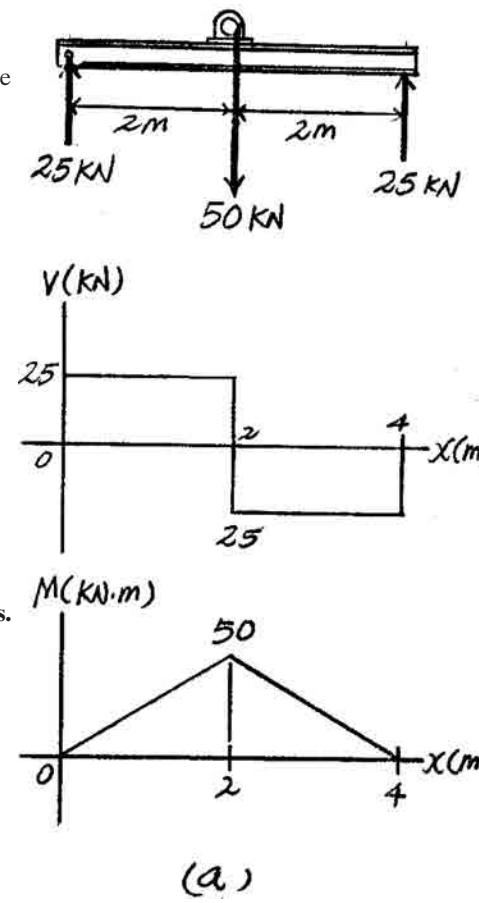

(a)

Bending Stress: From the moment diagram, Fig. *a*, $M_{max} = 50$ kN · m. Applying the flexure formula,

$$S_{required} = \frac{M_{max}}{\sigma_{allow}} = \frac{50(10^3)}{150(10^6)}$$

$$= 0.3333(10^{-3})\ \text{m}^3 = 333.33(10^3)\ \text{mm}^3$$

Select a W310 × 33[$S_x = 415(10^3)$ mm^3, $d = 313$ mm, and $t_w = 6.60$ mm]

Shear Stress: From the shear diagram, Fig. *a*, $V_{max} = 25$ kN. We have

$$\tau_{max} = \frac{V_{max}}{t_w d} = \frac{25(10^3)}{6.60(10^{-3})(0.313)}$$

$$= 12.10\ \text{MPa} < \tau_{allow} = 85\ \text{MPa (OK)}$$

Hence, use a W310 × 33 **Ans.**

11–17. If the W360 × 45 beam is made from steel having an allowable normal stress of $\sigma_{allow} = 150$ MPa and an allowable shear stress of $\tau_{allow} = 85$ MPa, determine the maximum cable force **P** that can safely be supported by the beam.

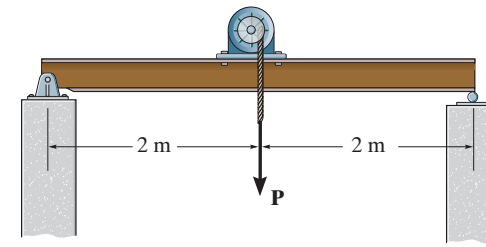

Shear and Moment Diagram: As shown in Fig. *a*,

Bending Stress: From the moment diagram, Fig. *a*, $M_{max} = P$. For W360 × 45 section, $S_x = 688(10^3)\ \text{mm}^3 = 0.688(10^{-3})\ \text{m}^3$.

Applying the flexure formula,

$$M_{max} = S_x \sigma_{allow}$$

$$P = 0.688(10^{-3})[150(10^6)]$$

$$P = 103\,200\ \text{N} = 103\ \text{kN}$$ **Ans.**

Shear Stress: From the shear diagram, Fig. *a*, $V_{max} = \frac{P}{2} = \frac{103\,200}{2} = 51\,600$ N. For W360 × 45 section, $d = 352$ mm and $t_w = 6.86$ mm. We have

$$\tau_{max} = \frac{V_{max}}{t_w d} = \frac{51\,600}{6.86(10^{-3})(0.352)}$$

$$= 21.37\ \text{MPa} < \tau_{allow} = 85\ \text{MPa (OK!)}$$

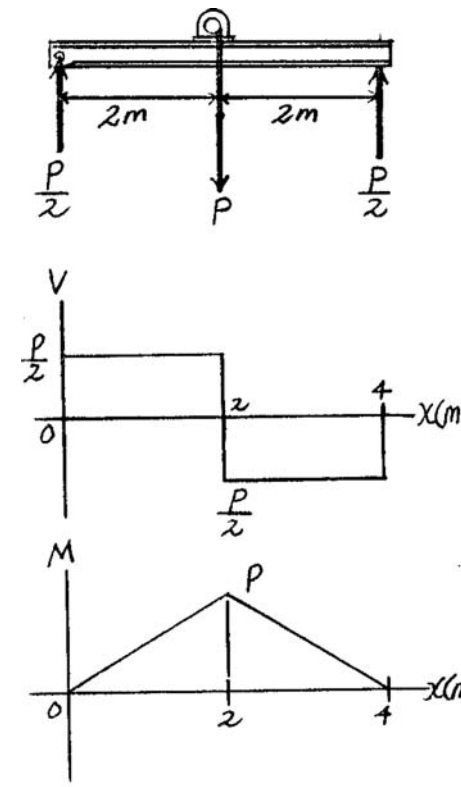

(a)

Ans:
$P = 103$ kN

11–18. If $P = 800$ lb, determine the minimum dimension a of the beam's cross section to the nearest $\frac{1}{8}$ in. to safely support the load. The wood species has an allowable normal stress of $\sigma_{\text{allow}} = 1.5$ ksi and an allowable shear stress of $\tau_{\text{allow}} = 150$ psi.

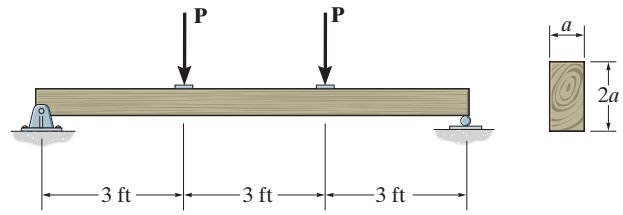

Shear and Moment Diagram: As shown in Fig. *a*,

Bending Stress: The moment of inertia of the beam's cross section about the bending axis is $I = \frac{1}{12}(a)(2a)^3 = \frac{2}{3}a^4$. Referring to the moment diagram in Fig. *a*, $M_{\max} = 2400$ lb · ft. Applying the flexure formula,

$$\sigma_{\text{allow}} = \frac{M_{\max}c}{I}$$

$$1.5(10^3) = \frac{2400(12)(a)}{\frac{2}{3}a^4}$$

$$a = 3.065 \text{ in.}$$

Use $a = 3\frac{1}{8}$ in. **Ans.**

Shear Stress: Using this result, $I = \frac{1}{12}(3.125)(6.25^3) = 63.578 \text{ in}^4$ and $Q_{\max} = \bar{y}'A' = \left(\frac{3.125}{2}\right)(3.125)(3.125) = 15.259 \text{ in}^3$. Fig. *b*. Referring to the shear diagram, Fig. *a*, $V_{\max} = 800$ lb. Using the shear formula,

$$\tau_{\max} = \frac{VQ_{\max}}{It} = \frac{800(15.259)}{63.578(3.125)} = 61.44 \text{ psi} < \tau_{\text{allow}} = 150 \text{ psi (OK!)}$$

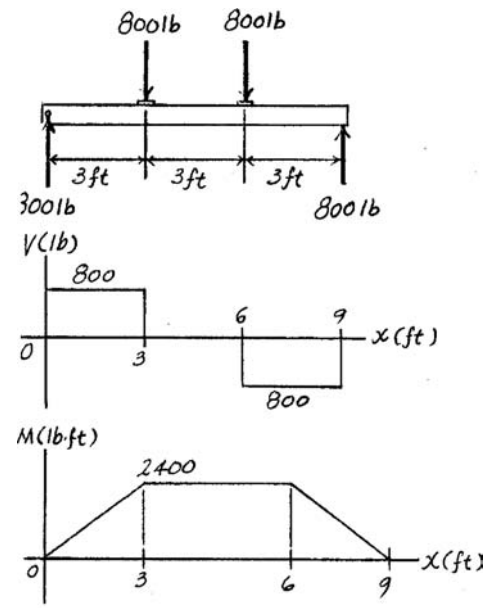

(a)

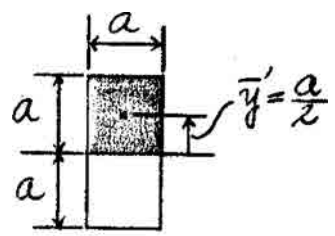

(b)

Ans:
Use $a = 3\frac{1}{8}$ in.

11–19. If $a = 3$ in. and the wood has an allowable normal stress of $\sigma_{allow} = 1.5$ ksi, and an allowable shear stress of $\tau_{allow} = 150$ psi, determine the maximum allowable value of P acting on the beam.

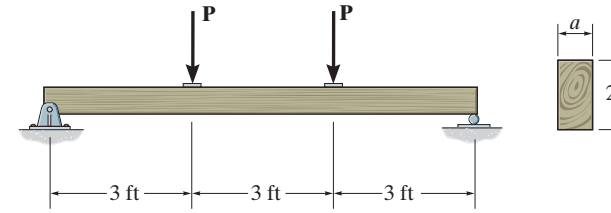

Shear and Moment Diagram: As shown in Fig. *a,*

Bending Stress: The moment of inertia of the beam's cross section about the bending axis is $I = \frac{1}{12}(3)(6^3) = 54 \text{ in}^4$. Referring to the moment diagram in Fig. *a*, $M_{max} = 3P$. Applying the flexure formula,

$$\sigma_{allow} = \frac{M_{max}c}{I}$$

$$1.5(10^3) = \frac{3P(12)(3)}{54}$$

$$P = 750 \text{ lb}$$ **Ans.**

Shear Stress: Referring to Fig. *b*, $Q_{max} = \bar{y}'A' = 1.5(3)(3) = 13.5 \text{ in}^3$, Fig. *b*. Referring to the shear diagram, Fig. *a*, $V_{max} = 750$ lb. Using the shear formula,

$$\tau_{max} = \frac{VQ_{max}}{It} = \frac{750(13.5)}{54(3)} = 62.5 \text{ psi} < \tau_{allow} = 150 \text{ psi (OK!)}$$

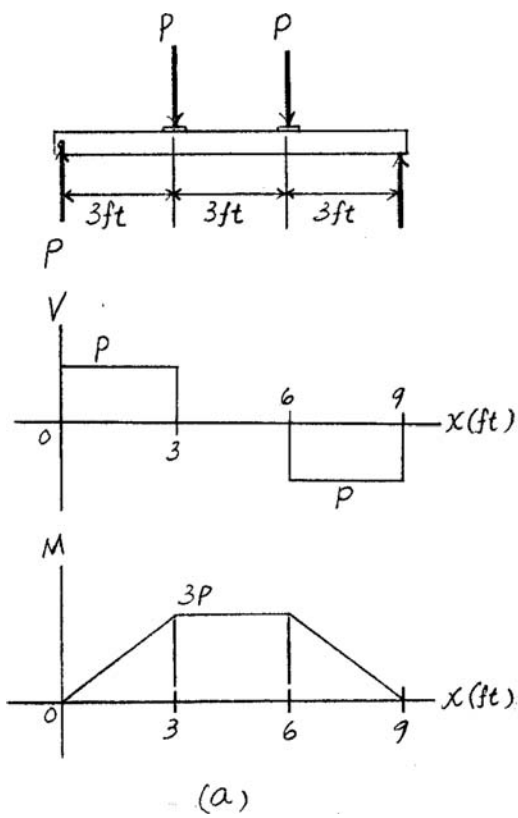

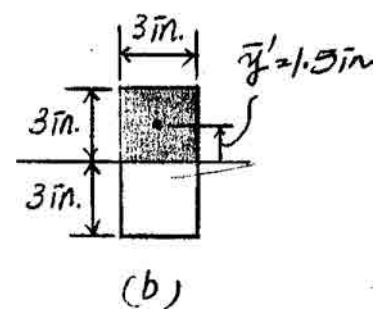

Ans:
$P = 750$ lb

***11–20.** The shaft is supported by a smooth thrust bearing at A and a smooth journal bearing at B. If $P = 5$ kN and the shaft is made from steel having an allowable normal stress of $\sigma_{\text{allow}} = 150$ MPa and an allowable shear stress of $\tau_{\text{allow}} = 85$ MPa, determine the required minimum wall thickness t of the shaft to the nearest millimeter to safely support the load.

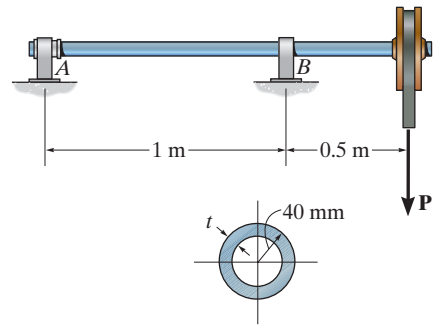

Shear and Moment Diagram: As shown in Fig. a,

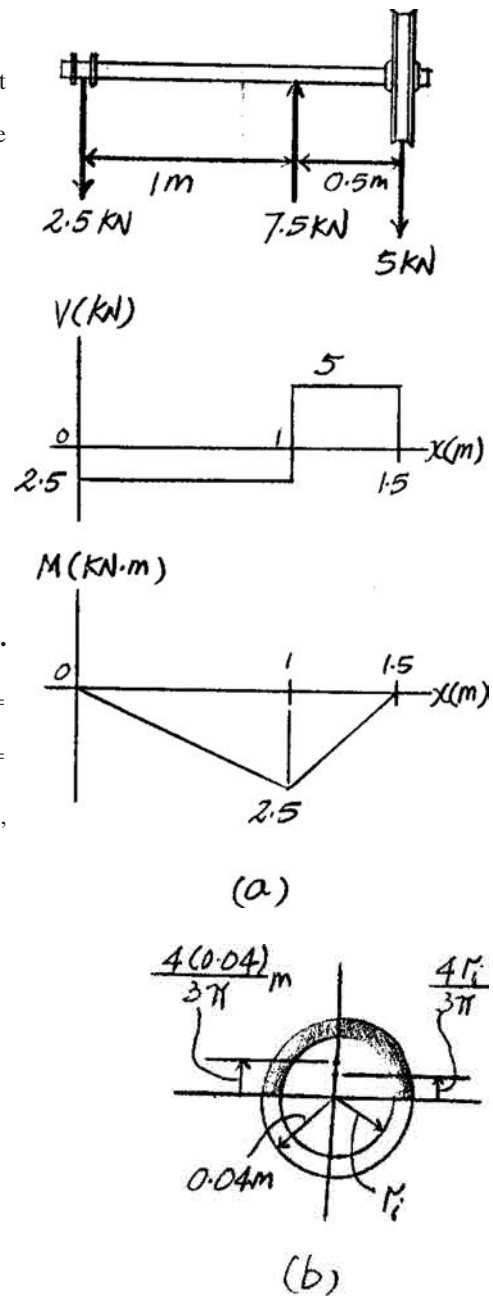

Bending Stress: From the moment diagram, Fig. a, $M_{\max} = 2.5$ kN · m. The moment of inertia of the shaft about the bending axis is $I = \frac{\pi}{4}(0.04^4 - r_i{}^4)$. Applying the flexure formula,

$$\sigma_{\text{allow}} = \frac{M_{\max} c}{I}$$

$$150(10^6) = \frac{2.5(10^3)(0.04)}{\frac{\pi}{4}(0.04^4 - r_i{}^4)}$$

$$r_i = 0.03617 \text{ m} = 36.17 \text{ mm}$$

Thus,

$$t = r_0 - r_i = 40 - 36.17 = 3.83 \text{ mm}$$

Use $t = 4$ mm **Ans.**

Shear Stress: Using this result, $r_i = 0.04 - 0.004 = 0.036$ m. Then $Q_{\max} = \frac{4(0.04)}{3\pi}\left[\frac{\pi}{2}(0.04^2)\right] - \frac{4(0.036)}{3\pi}\left[\frac{\pi}{2}(0.036^2)\right] = 11.5627(10^{-6})\text{ m}^3$, Fig. b, and $I = \frac{\pi}{4}(0.04^4 - 0.036^4) = 0.69145(10^{-6})\text{ m}^4$. Referring to the shear diagram, Fig. a, $V_{\max} = 5$ kN.

$$\tau_{\max} = \frac{V_{\max} Q_{\max}}{It} = \frac{5(10^3)[11.5627(10^{-6})]}{0.69145(10^{-6})(0.008)}$$

$$= 10.45 \text{ MPa} < \tau_{\text{allow}} = 85 \text{ MPa (OK)}$$

11–21. The shaft is supported by a smooth thrust bearing at A and a smooth journal bearing at B. If the shaft is made from steel having an allowable normal stress of $\sigma_{\text{allow}} = 150$ MPa and allowable shear stress of $\tau_{\text{allow}} = 85$ MPa, determine the maximum allowable force **P** that can be applied to the shaft. The thickness of the shaft's wall is $t = 5$ mm.

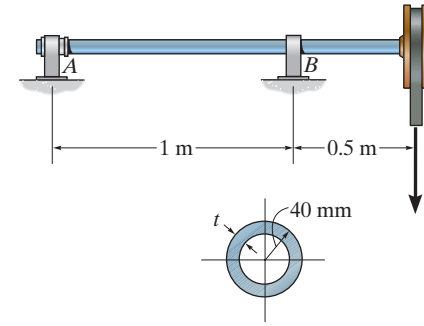

Shear and Moment Diagram: As shown in Fig. a,

Bending Stress: The moment of inertia of the shaft about the bending axis is $I = \frac{\pi}{4}(0.04^4 - 0.035^4) = 0.8320(10^{-6})\ \text{m}^4$. Referring to the moment diagram, Fig. a, $M_{\max} = 0.5P$. Applying the flexure formula,

$$\sigma_{\text{allow}} = \frac{M_{\max} c}{I}$$

$$150(10^6) = \frac{0.5P(0.04)}{0.8320(10^{-6})}$$

$$P = 6240.23\text{N} = 6.24\ \text{kN}$$ **Ans.**

Shear Stress:

$$Q_{\max} = \frac{4(0.04)}{3\pi}\left[\frac{\pi}{2}(0.04^2)\right] - \frac{4(0.035)}{3\pi}\left[\frac{\pi}{2}(0.035^2)\right]$$

$$= 14.0833(10^{-6})\ \text{m}^3$$

Referring to the shear diagram, Fig. a, $V_{\max} = P = 6240.23$ N. Applying the shear formula,

$$\tau_{\max} = \frac{V_{\max} Q_{\max}}{It} = \frac{6240.23[14.0833(10^{-6})]}{0.8320(10^{-6})(0.01)}$$

$$= 10.56\ \text{MPa} < \tau_{\text{allow}} = 85\ \text{MPa (OK!)}$$

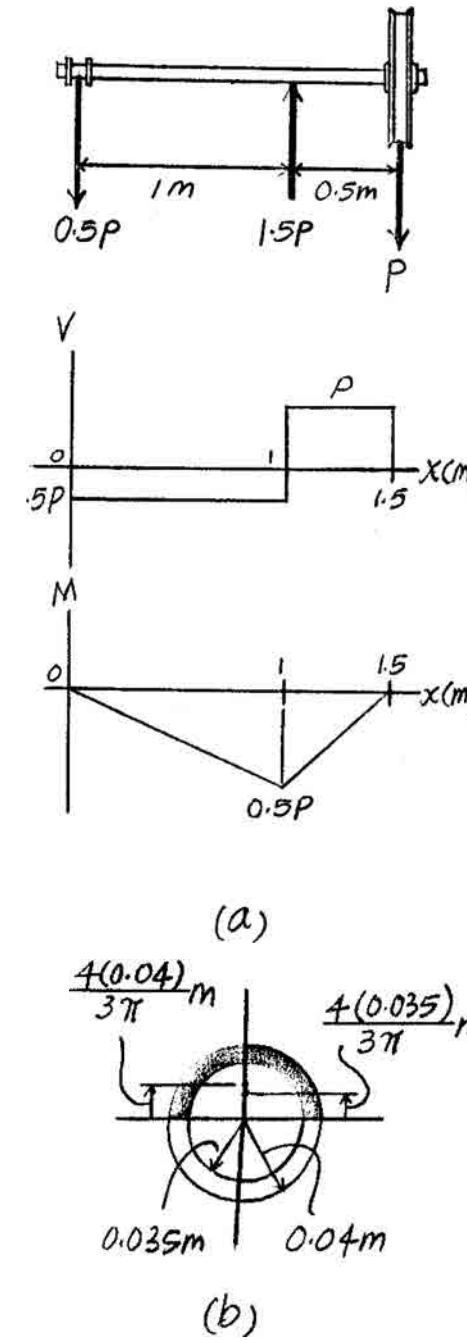

Ans:
$P = 6.24$ kN

11–22. Determine the minimum depth h of the beam to the nearest $\frac{1}{8}$ in. that will safely support the loading shown. The allowable bending stress is $\sigma_{\text{allow}} = 21$ ksi and the allowable shear stress is $\tau_{\text{allow}} = 10$ ksi. The beam has a uniform thickness of 3 in.

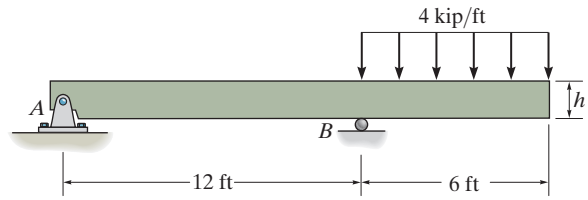

The section modulus of the rectangular cross section is

$$S = \frac{I}{c} = \frac{\frac{1}{12}(3)(h^3)}{h/2} = 0.5\,h^2$$

From the moment diagram, $M_{\max} = 72$ kip · ft.

$$S_{\text{req'd}} = \frac{M_{\max}}{\sigma_{\text{allow}}}$$

$$0.5h^2 = \frac{72(12)}{21}$$

$$h = 9.07 \text{ in}$$

Use $\quad h = 9\frac{1}{8}$ in **Ans.**

From the shear diagram, Fig. a, $V_{\max} = 24$ kip. Referring to Fig. b,

$Q_{\max} = \bar{y}'A' = \left(\frac{9.125}{4}\right)\left(\frac{9.125}{2}\right)(3) = 31.22 \text{ in}^3$ and

$I = \frac{1}{12}(3)\left(9.125^3\right) = 189.95 \text{ in}^4$. Provide the shear stress check by applying shear formula,

$$\tau_{\max} = \frac{V_{\max} Q_{\max}}{It}$$

$$= \frac{24(31.22)}{189.95(3)}$$

$$= 1.315 \text{ ksi} < \tau_{\text{allow}} = 10 \text{ ksi (O.K!)}$$

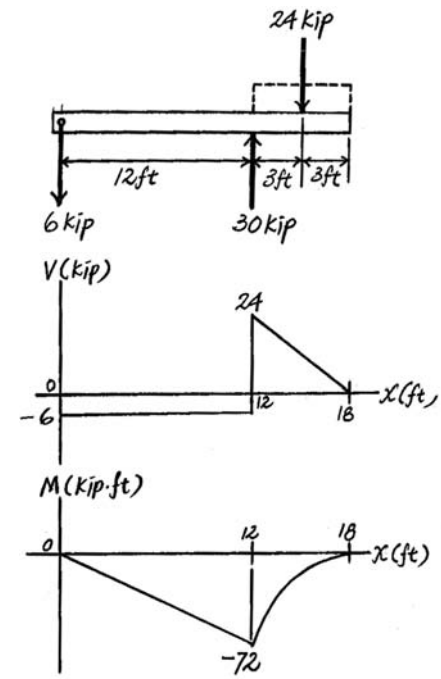

(a)

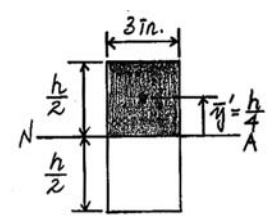

(b)

Ans:
Use $h = 9\frac{1}{8}$ in.

11–23. The beam is constructed from three boards as shown. If each nail can support a shear force of 50 lb, determine the maximum spacing of the nails, s, s', s'', for regions AB, BC, and CD, respectively.

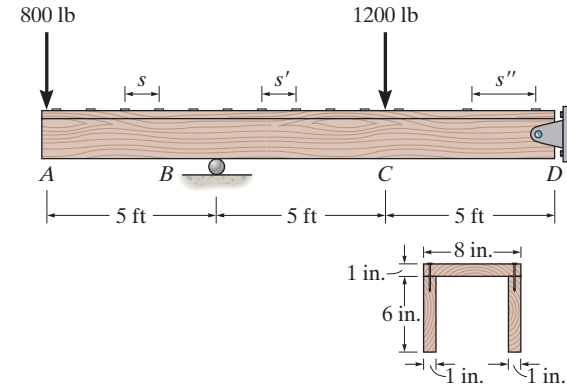

Section Properties:

$$\bar{y} = \frac{(0.5)8(1) + 2[(4)(6)(1)]}{8(1) + 2[(6)(1)]} = 2.6 \text{ in.}$$

$$I = \frac{1}{12}(8)(1^3) + 8(1)(2.6 - 0.5)^2 + 2\left(\frac{1}{12}\right)(1)(6^3) + 2(1)(6)(4 - 2.6)^2 = 95.47 \text{ in}^4$$

$$Q = (2.6 - 0.5)(8)(1) = 16.8 \text{ in}^3$$

Region *AB*:

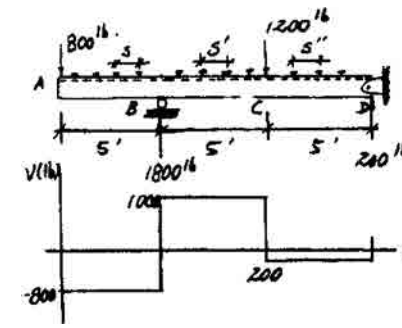

$$V = 800 \text{ lb} \qquad q = \frac{VQ}{I} = \frac{800(16.8)}{95.47} = 140.8 \text{ lb/in.}$$

$$s = \frac{50}{140.8/2} = 0.710 \text{ in.}$$ **Ans.**

Region *BC*:

$$V = 1000 \text{ lb}, \qquad q = \frac{VQ}{I} = \frac{1000(16.8)}{95.47} = 176.0 \text{ lb/in.}$$

$$s' = \frac{50}{176.0/2} = 0.568 \text{ in.}$$ **Ans.**

Region *CD*:

$$V = 200 \text{ lb} \qquad q = \frac{VQ}{I} = \frac{200(16.8)}{95.47} = 35.2 \text{ lb/in.}$$

$$s'' = \frac{50}{35.2/2} = 2.84 \text{ in.}$$ **Ans.**

Ans:
$s = 0.710$ in., $s' = 0.568$ in., $s'' = 2.84$ in.

***11–24.** The shaft is supported by a smooth thrust bearing at A and smooth journal bearing at B. If $P = 10$ kN and the shaft is made from steel having an allowable normal stress of $\sigma_{\text{allow}} = 150$ MPa and an allowable shear stress of $\tau_{\text{allow}} = 85$ MPa, determine the required minimum wall thickness t of the shaft to the nearest millimeter to safely support the load.

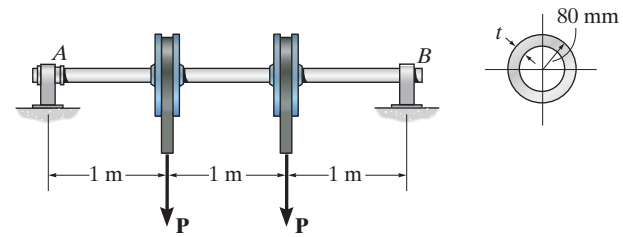

Shear and Moment Diagram: As shown in Fig. a,

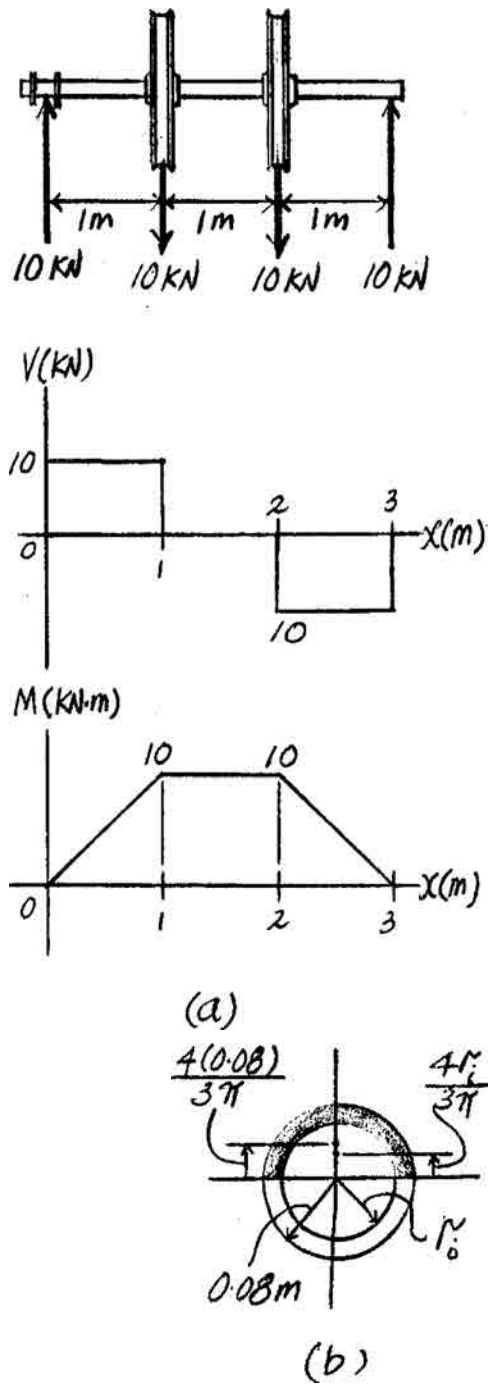

Bending Stress: From the moment diagram, Fig. a, $M_{\max} = 10$ kN · m. The moment of inertia of the shaft about the bending axis is $I = \frac{\pi}{4}(0.08^4 - r_i^4)$. Applying the flexure formula,

$$\sigma_{\text{alllow}} = \frac{M_{\max} c}{I}$$

$$150(10^6) = \frac{10(10^3)(0.08)}{\frac{\pi}{4}(0.08^4 - r_i^4)}$$

$$r_i = 0.07646 \text{ m} = 76.46 \text{ mm}$$

Thus,

$$t = r_0 - r_i = 80 - 76.46 = 3.54 \text{ mm}$$

Use $t = 4$ mm **Ans.**

Shear Stress: Using this result, $r_i = 0.08 - 0.004 = 0.076$ m. Then, from Fig. b,

$$Q_{\max} = \frac{4(0.08)}{3\pi}\left[\frac{\pi}{2}(0.08^2)\right] - \frac{4(0.076)}{3\pi}\left[\frac{\pi}{2}(0.076^2)\right]$$

$$= 48.6827(10^{-6}) \text{ m}^3$$

and

$$I = \frac{\pi}{4}(0.08^4 - 0.076^4) = 1.899456\pi(10^{-6}) \text{ m}^4$$

Referring to the shear diagram, Fig. a, $V_{\max} = 10$ kN. Applying the shear formula to check the shear stress,

$$\tau_{\max} = \frac{V_{\max} Q_{\max}}{It} = \frac{10(10^3)[48.6827(10^{-6})]}{1.899456\pi(10^{-6})(0.008)}$$

$$= 10.20 \text{ MPa} < \tau_{\text{allow}} = 85 \text{ MPa (OK!)}$$

11–25. The circular hollow shaft is supported by a smooth thrust bearing at A and smooth journal bearing at B. If the shaft is made from steel having an allowable normal stress of $\sigma_{allow} = 150$ MPa and allowable shear stress of $\tau_{allow} = 85$ MPa, determine the maximum allowable magnitude of the two forces **P** that can be applied to the shaft. The thickness of the shaft's wall is $t = 5$ mm.

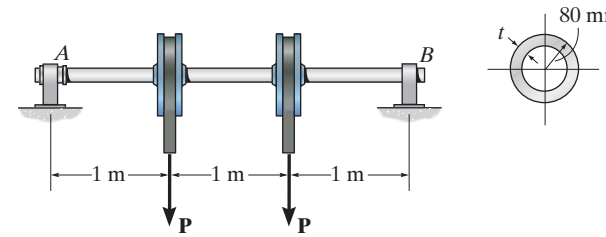

Shear and Moment Diagram: As shown in Fig. a,

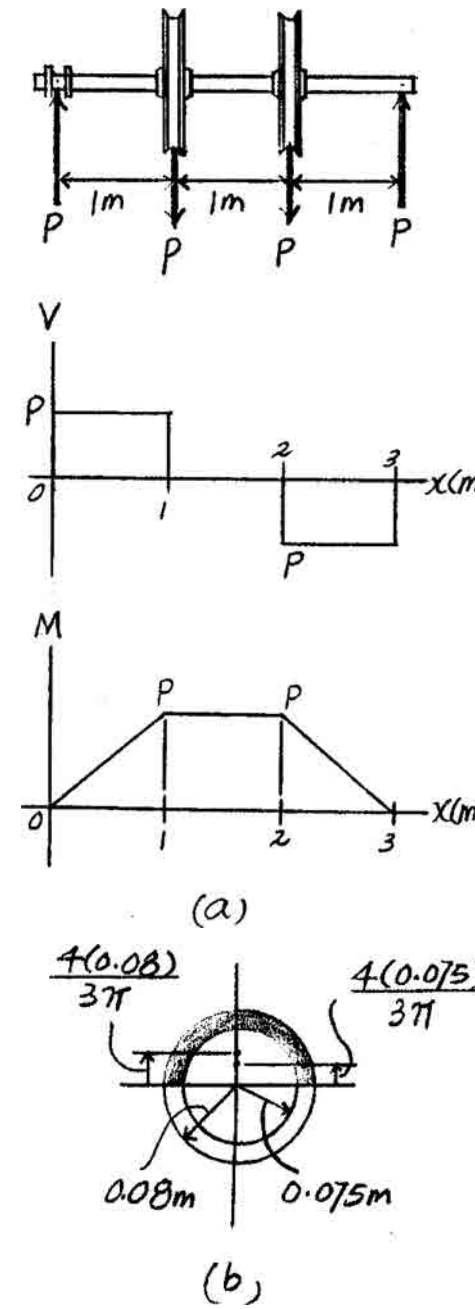

Bending Stress: The moment of inertia of the shaft about the bending axis is $I = \frac{\pi}{4}(0.08^4 - 0.075^4)$. Referring to the moment diagram, Fig. a, $M_{max} = P$. Applying the flexure formula,

$$\sigma_{allow} = \frac{M_{max}\,c}{I}$$

$$150(10^6) = \frac{P(0.08)}{7.3194(10^{-6})}$$

$$P = 13\,723.91 \text{ N} = 13.7 \text{ kN}$$ **Ans.**

Shear Stress:

$$Q_{max} = \frac{4(0.08)}{3\pi}\left[\frac{\pi}{2}(0.08^2)\right] - \frac{4(0.075)}{3\pi}\left[\frac{\pi}{2}(0.075^2)\right]$$

$$= 60.0833(10^{-6}) \text{ m}^3$$

Referring to the shear diagram, Fig. a, $V_{max} = P = 13723.91$ N. Applying the shear formula, we have

$$\tau_{max} = \frac{V_{max}\,Q_{max}}{It} = \frac{13723.91[60.0833(10^{-6})]}{7.3194(10^{-6})(0.01)}$$

$$= 11.27 \text{ MPa} < \tau_{allow} = 85 \text{ MPa (OK!)}$$

Ans:
$P = 13.7$ kN

11–26. Select the lightest-weight steel wide-flange beam from Appendix B that will safely support the loading shown. The allowable bending stress is $\sigma_{allow} = 22$ ksi and the allowable shear stress is $\tau_{allow} = 12$ ksi.

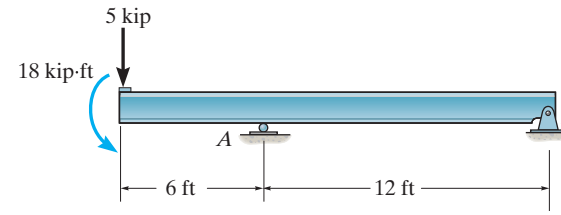

From the moment diagram, Fig. *a*, $M_{max} = 48$ kip · ft.

$$S_{req'd} = \frac{M_{max}}{\sigma_{allow}}$$

$$= \frac{48(12)}{22}$$

$$= 26.18 \text{ in}^3$$

Select $W\ 14 \times 22\ \left[S_x = 29.0 \text{ in}^3, d = 13.74 \text{ in. and } t_w = 0.230 \text{ in.}\right]$

From the shear diagram, Fig. *a*, $V_{max} = 5$ kip. Provide the shear stress check for $W\ 14 \times 22$,

$$\tau_{max} = \frac{V_{max}}{t_w d}$$

$$= \frac{5}{0.230(13.74)}$$

$$= 1.58 \text{ ksi} < \tau_{allow} = 12 \text{ ksi}, (O.K!)$$

Use W14 × 22 **Ans.**

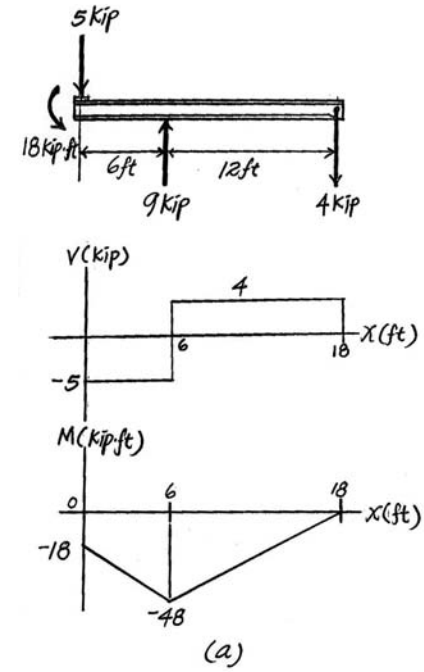

Ans:
Use W14 × 22

11–27. The steel cantilevered T-beam is made from two plates welded together as shown. Determine the maximum loads P that can be safely supported on the beam if the allowable bending stress is $\sigma_{allow} = 170$ MPa and the allowable shear stress is $\tau_{allow} = 95$ MPa.

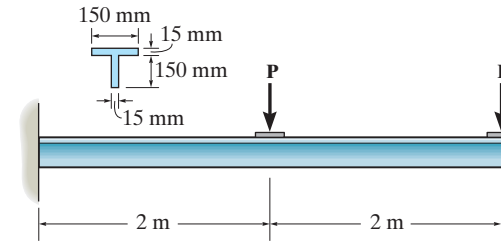

Section Properties:

$$\bar{y} = \frac{\Sigma \bar{y} A}{\Sigma A} = \frac{0.0075(0.15)(0.015) + 0.09(0.15)(0.015)}{0.15(0.015) + 0.15(0.015)} = 0.04875 \text{ m}$$

$$I = \frac{1}{12}(0.15)(0.015)^3 + 0.15(0.015)(0.04875 - 0.0075)^2$$

$$+ \frac{1}{12}(0.015)(0.15)^3 + 0.015(0.15)(0.09 - 0.04875)^2 = 11.9180(10^{-6}) \text{ m}^4$$

$$S = \frac{I}{c} = \frac{11.9180(10^{-6})}{(0.165 - 0.04875)} = 0.10252(10^{-3}) \text{ m}^3$$

$$Q_{max} = \bar{y}' A' = \left(\frac{(0.165 - 0.04875)}{2}\right)(0.165 - 0.04875)(0.015) = 0.101355(10^{-3}) \text{ m}^3$$

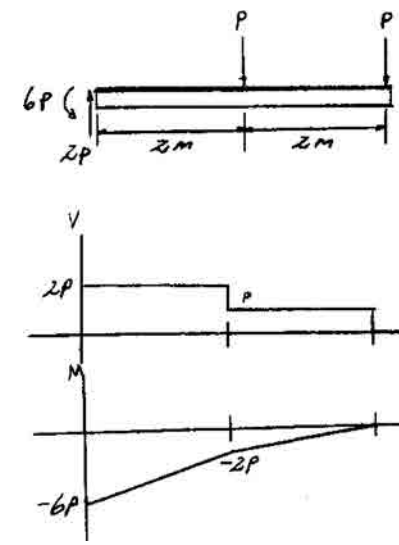

Maximum load: Assume failure due to bending moment.

$$M_{max} = \sigma_{allow} S; \qquad 6P = 170(10^6)(0.10252)(10^{-3})$$

$$P = 2904.7 \text{ N} = 2.90 \text{ kN}$$ **Ans.**

Check shear:

$$\tau_{max} = \frac{V_{max} Q_{max}}{I t} = \frac{2(2904.7)(0.101353)(10^{-3})}{11.9180(10^{-6})(0.015)} = 3.29 \text{ MPa} < \tau_{allow} = 95 \text{ MPa}$$

Ans:
$P = 2.90$ kN

***11–28.** The joist AB used in housing construction is to be made from 8-in. by 1.5-in. Southern-pine boards. If the design loading on each board is placed as shown, determine the largest room width L that the boards can span. The allowable bending stress for the wood is $\sigma_{\text{allow}} = 2$ ksi and the allowable shear stress is $\tau_{\text{allow}} = 180$ ksi. Assume that the beam is simply supported from the walls at A and B.

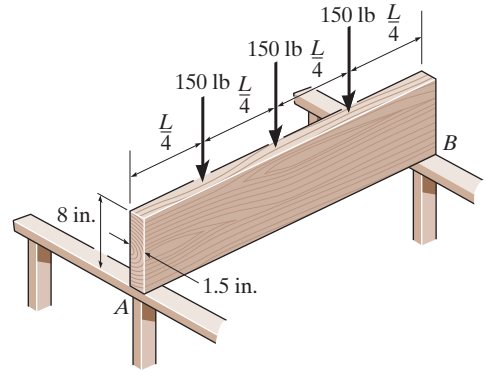

Check shear:

$$\tau_{\max} = \frac{1.5V}{A} = \frac{1.5(225)}{(1.5)(8)} = 28.1 \text{ psi}$$

$$28.1 \text{ psi} < 180 \text{ psi} \quad \text{OK}$$

For bending moment:

$$M_{\max} = 75\,L$$

$$I = \frac{1}{12}(1.5)(8^3) = 64 \text{ in}^4$$

$$S = \frac{I}{c} = \frac{64}{4} = 16 \text{ in}^3$$

$$M_{\max} = \sigma_{\text{allow}} S$$

$$75L(12) = 2000(16)$$

$$L = 35.6 \text{ ft} \qquad \textbf{Ans.}$$

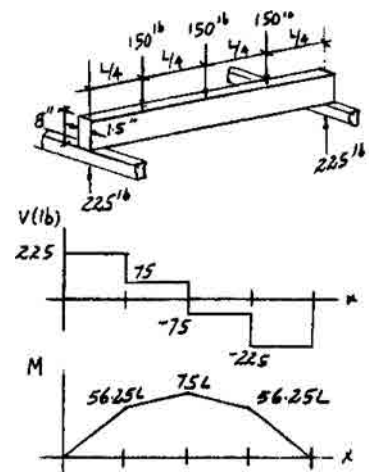

11–29. The beam is to be used to support the machine, which exerts the forces of 6 kip and 8 kip as shown. If the maximum bending stress is not to exceed $\sigma_{\text{allow}} = 22$ ksi, determine the required width b of the flanges.

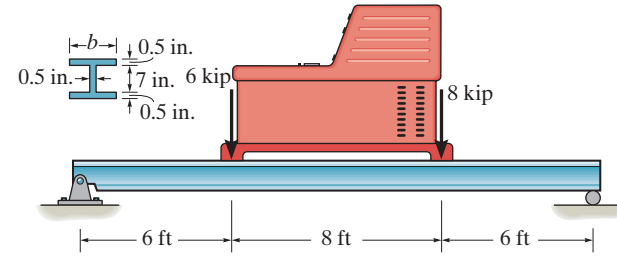

Section Properties:

$$I = \frac{1}{12}(b)(8^3) - \frac{1}{12}(b - 0.5)(7^3) = 14.083b + 14.292$$

$$S = \frac{I}{c} = \frac{14.083b + 14.292}{4} = 3.5208b + 3.5729$$

$$S_{\text{req'd}} = \frac{M_{\max}}{\sigma_{\text{allow}}}$$

$$3.5208b + 3.5729 = \frac{44.4(12)}{22}$$

$b = 5.86$ in. **Ans.**

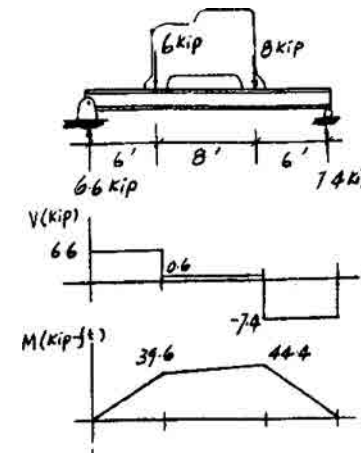

Ans:
$b = 5.86$ in.

11–30. The simply supported beam supports a load of $P = 16$ kN. Determine the smallest dimension a of each timber if the allowable bending stress for the wood is $\sigma_{\text{allow}} = 30$ MPa and the allowable shear stress is $\tau_{\text{allow}} = 800$ kPa. Also, if each bolt can sustain a shear of 2.5 kN, determine the spacing s of the bolts at the calculated dimension a.

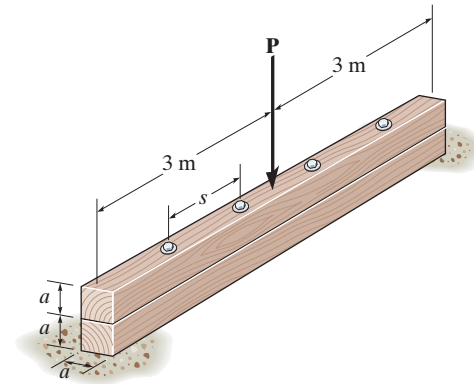

Section Properties:

$$I = \frac{1}{12}(a)(2\,a)^3 = 0.66667\,a^4$$

$$Q_{\max} = \bar{y}'A' = \frac{a}{2}(a)(a) = 0.5\,a^3$$

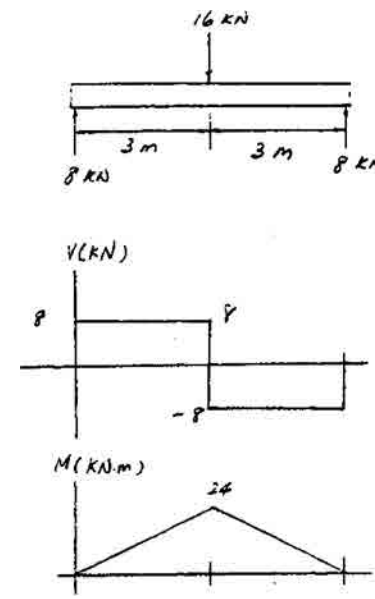

Assume bending controls.

$$\sigma_{\text{allow}} = \frac{M_{\max}c}{I}; \qquad 30(10^6) = \frac{24(10^3)a}{0.66667\,a^4}$$

$a = 0.106266$ m $= 106$ mm **Ans.**

Check shear:

$$\tau_{\max} = \frac{VQ}{It} = \frac{8(10^3)(0.106266/2)(0.106266)^2}{0.66667(0.106266^4)(0.106266)} = 531 \text{ kPa} < \tau_{\text{allow}} = 800 \text{ kPa} \qquad \text{OK}$$

Bolt spacing:

$$q = \frac{VQ}{I} = \frac{8(10^3)(0.106266/2)(0.106266^2)}{0.66667(0.106266^4)} = 56462.16 \text{ N/m}$$

$$s = \frac{2.5(10^3)}{56462.16} = 0.04427 \text{ m} = 44.3 \text{ mm}$$ **Ans.**

Ans:
$a = 106$ mm, $s = 44.3$ mm

11–31. Determine the variation in the depth w as a function of x for the cantilevered beam that supports a concentrated force **P** at its end so that it has a maximum bending stress σ_{allow} throughout its length. The beam has a constant thickness t.

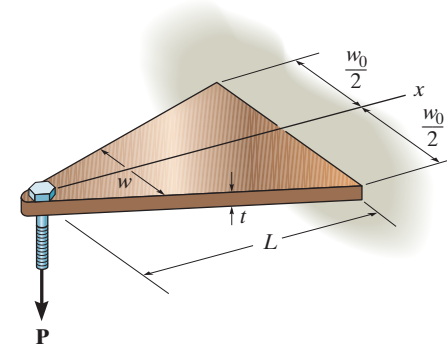

Section Properties:

$$I = \frac{1}{12}(w)(t^3) \qquad S = \frac{I}{c} = \frac{\frac{1}{12}(w)(t^3)}{t/2} = \frac{wt^2}{6}$$

$$\sigma_{\text{allow}} = \frac{M}{S} = \frac{Px}{w\,t^2/6} \qquad (1)$$

At $x = L$,

$$\sigma_{\text{allow}} = \frac{PL}{w_0\,t^2/6} \qquad (2)$$

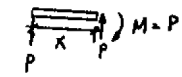

Equate Eqs (1) and (2),

$$\frac{Px}{w\,t^2/6} = \frac{PL}{w_0\,t^2/6}$$

$$w = \frac{w_0}{L}x \qquad \textbf{Ans.}$$

Ans:

$$w = \frac{w_0}{L}x$$

***11–32.** The beam is made from a plate that has a constant thickness b. If it is simply supported and carries a uniform load w, determine the variation of its depth as a function of x so that it maintains a constant maximum bending stress σ_{allow} throughout its length.

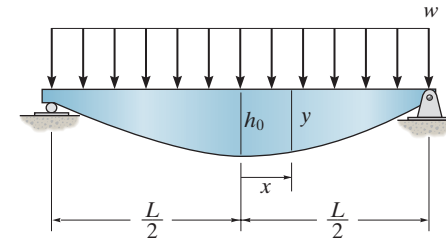

Moment Function: As shown on FBD(b).

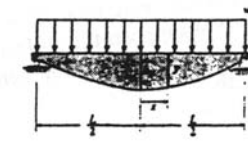

Section Properties:

$$I = \frac{1}{12}by^3 \qquad S = \frac{I}{c} = \frac{\frac{1}{12}by^3}{\frac{y}{2}} = \frac{1}{6}by^2$$

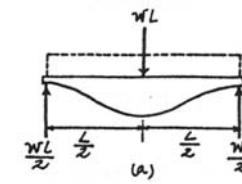

Bending Stress: Applying the flexure formula.

$$\sigma_{\text{allow}} = \frac{M}{S} = \frac{\frac{w}{8}(L^2 - 4x^2)}{\frac{1}{6}by^2}$$

$$\sigma_{\text{allow}} = \frac{3w(L^2 - 4x^2)}{4by^2} \qquad \textbf{[1]}$$

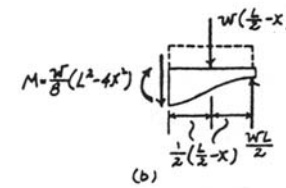

At $x = 0$, $y = h_0$. From Eq. [1],

$$\sigma_{\text{allow}} = \frac{3wL^2}{4bh_0^2} \qquad \textbf{[2]}$$

Equating Eq. [1] and [2] yields

$$y^2 = \frac{h_0^2}{L^2}\left(L^2 - 4x^2\right)$$

$$\frac{y^2}{h_0^2} + \frac{4x^2}{L^2} = 1 \qquad \textbf{Ans.}$$

The beam has a **semi-elliptical** shape.

11–33. The simply supported tapered rectangular beam with constant width b supports the concentrated forces **P**. Determine the absolute maximum normal stress developed in the beam and specify its location.

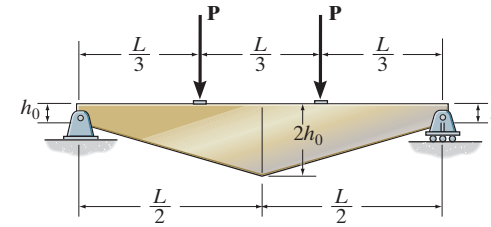

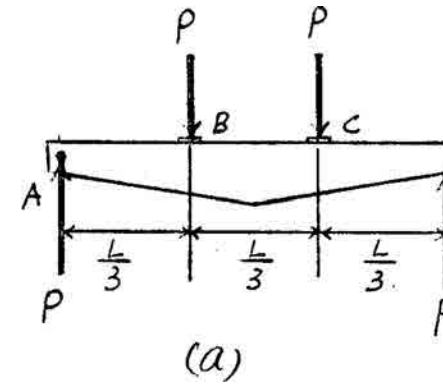

(a)

Support Reactions: As shown on the free-body diagram of the entire beam, Fig. *a*.

Moment Function: Considering the moment equilibrium of the free-body diagrams of the beam's cut segment shown in Figs. *b* and *c*. For region AB,

$$\circlearrowleft + \Sigma M_O = 0; \qquad M - Px = 0 \qquad M = Px$$

For region BC,

$$\circlearrowleft + \Sigma M_O = 0; \qquad M - P\left(\frac{L}{3}\right) = 0 \qquad M = \frac{PL}{3}$$

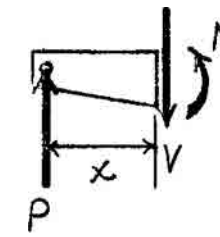

(b)

Section Properties: Referring to the geometry shown in Fig. *d*,

$$\frac{h - h_0}{x} = \frac{h_0}{L/2}; \quad h = \frac{h_0}{L}(2x + L)$$

At position x, the height of the beam's cross section is h. Thus

$$I = \frac{1}{12}bh^3 = \frac{1}{12}b\left[\frac{h_0}{L}(2x + L)\right]^3 = \frac{bh_0^3}{12L^3}(2x + L)^3$$

Then

$$S = \frac{I}{c} = \frac{\dfrac{bh_0^3}{12L^3}(2x + L)^3}{\dfrac{h_0}{2L}(2x + L)} = \frac{bh_0^2}{6L^2}(2x + L)^2$$

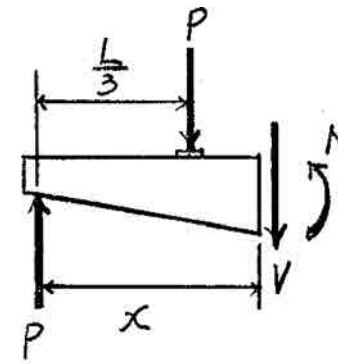

(c)

Bending Stress: Since the moment in region BC is constant and the beam size at this region is larger than that of region AB, the maximum moment will not occur at this region. For region AB, the flexure formula gives

$$\sigma_{\max} = \frac{M}{S} = \frac{Px}{\dfrac{bh_0^2}{6L^2}(2x + L)^2}$$

$$\sigma_{\max} = \frac{6PL^2}{bh_0^2}\left[\frac{x}{(2x + L)^2}\right] \qquad (1)$$

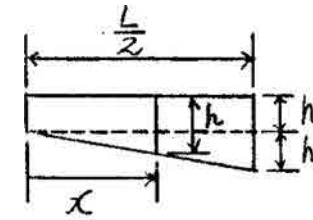

(d)

In order to have absolute maximum bending stress, $\dfrac{d\sigma_{\max}}{dx} = 0$.

$$\frac{d\sigma_{\max}}{dx} = \frac{6PL^2}{bh_0^2}\left[\frac{(2x + L)^2(1) - x(2)(2x + L)(2)}{(2x + L)^4}\right] = 0$$

$$\frac{6PL^2}{bh_0^2}\left[\frac{(L - 2x)}{(2x + L)^3}\right] = 0$$

11–33. Continued

Since $\frac{6PL^2}{bh_0^2} \neq 0$, then

$$L - 2x = 0 \qquad x = \frac{L}{2}$$

Since $x = \frac{L}{2} > \frac{L}{3}$, the solution is not valid. Therefore, the absolute maximum bending stress must occur at

$$x = \frac{L}{3} \text{ and, by symmetry, } x = \frac{2L}{3} \qquad \textbf{Ans.}$$

Substituting $x = \frac{L}{3}$ into Eq. (1).

$$\sigma_{\substack{\text{abs}\\\text{max}}} = \frac{18PL}{25bh_0^2} \qquad \textbf{Ans.}$$

Ans:
$x = \frac{L}{3}, \frac{2L}{3}, \sigma_{\substack{\text{abs}\\\text{max}}} = \frac{18PL}{25bh_0^2}$

11–34. The beam is made from a plate that has a constant thickness b. If it is simply supported and carries the distributed loading shown, determine the variation of its depth as a function of x so that it maintains a constant maximum bending stress σ_{allow} throughout its length.

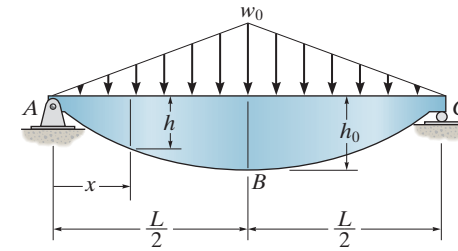

Support Reactions: As shown on the free-body diagram of the entire beam, Fig. *a*.

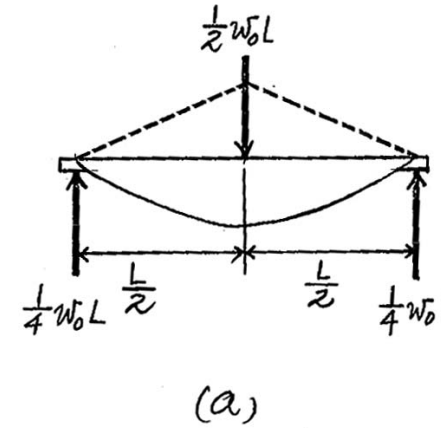

Moment Function: The distributed load as a function of x is

$$\frac{w}{x} = \frac{w_0}{L/2} \qquad\qquad w = \frac{2w_0}{L}x$$

The free-body diagram of the beam's left cut segment is shown in Fig. *b*. Considering the moment equilibrium of this free-body diagram,

$$\circlearrowleft + \Sigma M_O = 0; \qquad M + \frac{1}{2}\left[\frac{2w_0}{L}x\right]x\left(\frac{x}{3}\right) - \frac{1}{4}w_0Lx = 0$$

$$M = \frac{w_0}{12L}\left(3L^2x - 4x^3\right)$$

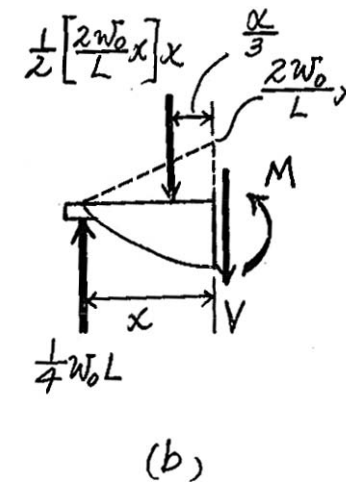

Section Properties: At position x, the height of the beam's cross section is h. Thus

$$I = \frac{1}{12}bh^3$$

Then

$$S = \frac{I}{c} = \frac{\frac{1}{12}bh^3}{h/2} = \frac{1}{6}bh^2$$

Bending Stress: The maximum bending stress $\sigma_{\max}$ as a function of x can be obtained by applying the flexure formula.

$$\sigma_{\max} = \frac{M}{S} = \frac{\frac{w_0}{12L}\left(3L^2x - 4x^3\right)}{\frac{1}{6}bh^2} = \frac{w_0}{2bh^2L}\left(3L^2x - 4x^3\right), \qquad (1)$$

At $x = \frac{L}{2}$, $h = h_0$. From Eq. (1),

$$\sigma_{\max} = \frac{w_0L^2}{2bh_0{}^2} \qquad (2)$$

Equating Eqs. (1) and (2),

$$\frac{w_0}{2bh^2L}\left(3L^2x - 4x^3\right) = \frac{w_0L^2}{2bh_0{}^2}$$

$$h = \frac{h_0}{L^{3/2}}\left(3L^2x - 4x^3\right)^{1/2} \qquad \textbf{Ans.}$$

Ans:

$$h = \frac{h_0}{L^{3/2}}(3L^2x - 4x^3)^{1/2}$$

11–35. Determine the variation in the depth d of a cantilevered beam that supports a concentrated force **P** at its end so that it has a constant maximum bending stress σ_{allow} throughout its length. The beam has a constant width b_0.

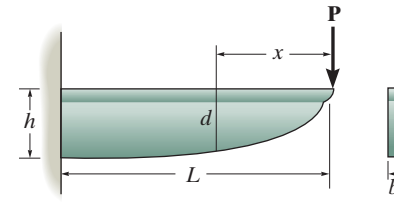

Section properties:

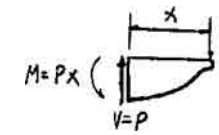

$$I = \frac{1}{12} b_0 d^3; \qquad S = \frac{I}{c} = \frac{\frac{1}{12} b_0 d^3}{\frac{d}{2}} = \frac{b_0 d^2}{6}$$

Maximum bending stress:

$$\sigma_{\text{allow}} = \frac{M}{S} = \frac{Px}{b_0 \frac{d^2}{6}} = \frac{6Px}{b_0 d^2} \qquad (1)$$

At $x = L, \quad d = h$

$$\sigma_{\text{allow}} = \frac{6PL}{b_0 h^2} \qquad (2)$$

Equating Eqs. (1) and (2),

$$\frac{6Px}{b_0 d^2} = \frac{6PL}{b_0 h^2}$$

$$d = h\sqrt{\frac{x}{L}} \qquad \textbf{Ans.}$$

Ans:

$$d = h\sqrt{\frac{x}{L}}$$

***11–36.** Determine the variation of the radius r of the cantilevered beam that supports the uniform distributed load so that it has a constant maximum bending stress σ_{max} throughout its length.

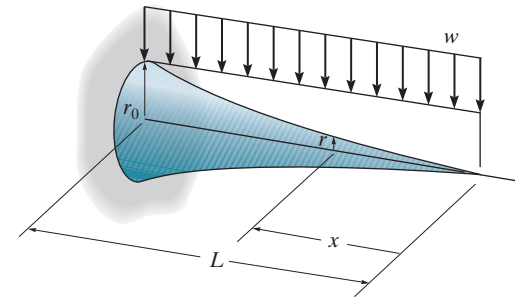

Moment Function: As shown on FBD.

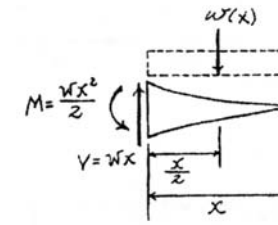

Section Properties:

$$I = \frac{\pi}{4} r^4 \qquad S = \frac{I}{c} = \frac{\frac{\pi}{4} r^4}{r} = \frac{\pi}{4} r^3$$

Bending Stress: Applying the flexure formula.

$$\sigma_{max} = \frac{M}{S} = \frac{\frac{wx^2}{2}}{\frac{\pi}{4} r^3}$$

$$\sigma_{max} = \frac{2wx^2}{\pi r^3} \qquad \textbf{[1]}$$

At $x = L, r = r_0$. From Eq. [1],

$$\sigma_{max} = \frac{2wL^2}{\pi r_0^3} \qquad \textbf{[2]}$$

Equating Eq. [1] and [2] yields

$$r^3 = \frac{r_0^3}{L^2} x^2 \qquad \textbf{Ans.}$$

11–37. Determine the height h of the rectangular cantilever beam of constant width b in terms of h_0, L, and x so that the maximum normal stress in the beam is constant throughout its length.

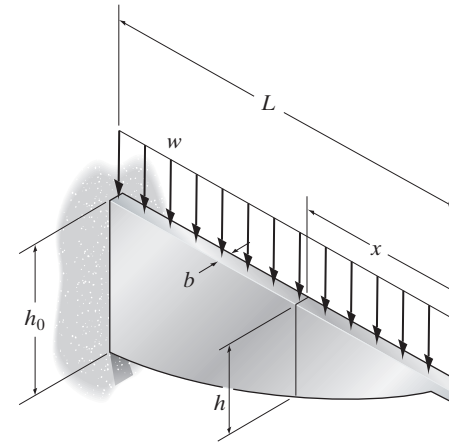

Moment Functions: Considering the moment equilibrium of the free-body diagram of the beam's right cut segment, Fig. *a*,

$$\circlearrowleft + \Sigma M_O = 0; \qquad M - wx\left(\frac{x}{2}\right) = 0 \qquad M = \frac{1}{2}wx^2$$

Section Properties: At position x, the height of the beam's cross section is h. Thus

$$I = \frac{1}{12}bh^3$$

Then

$$S = \frac{I}{c} = \frac{\frac{1}{12}bh^3}{h/2} = \frac{1}{6}bh^2$$

Bending Stress: The maximum bending stress $\sigma_{\max}$ as a function of x can be obtained by applying the flexure formula.

$$\sigma_{\max} = \frac{M}{S} = \frac{\frac{1}{2}wx^2}{\frac{1}{6}bh^2} = \frac{3w}{bh^2}x^2 \qquad (1)$$

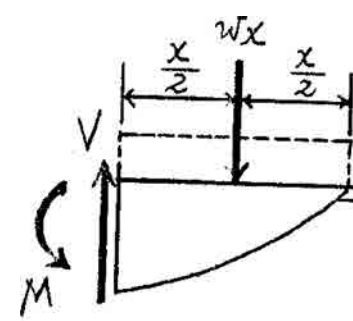

(a)

At $x = L$, $h = h_0$. From Eq. (1),

$$\sigma_{\max} = \frac{3wL^2}{bh_0^2} \qquad (2)$$

Equating Eqs. (1) and (2),

$$\frac{3w}{bh^2}x^2 = \frac{3wL^2}{bh_0^2}$$

$$h = \frac{h_0}{L}x \qquad \textbf{Ans.}$$

Ans:
$h = \frac{h_0}{L}x$

11–38. Determine the variation in the width b as a function of x for the cantilevered beam that supports a uniform distributed load along its centerline so that it has the same maximum bending stress σ_{allow} throughout its length. The beam has a constant depth t.

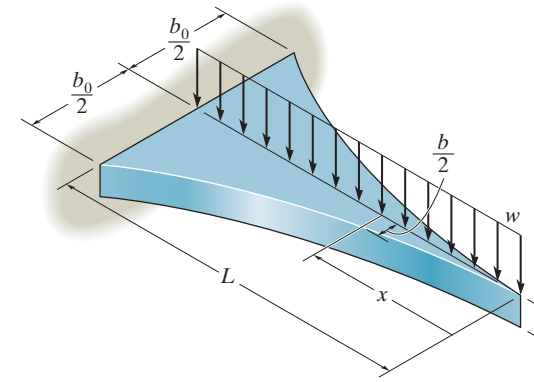

Section Properties:

$$I = \frac{1}{12} b\, t^3 \qquad S = \frac{I}{c} = \frac{\frac{1}{12} b\, t^3}{\frac{t}{2}} = \frac{t^2}{6} b$$

Bending Stress:

$$\sigma_{\text{allow}} = \frac{M}{S} = \frac{\frac{w\,x^2}{2}}{\frac{t^2}{6} b} = \frac{3wx^2}{t^2 b} \qquad \textbf{(1)}$$

At $x = L, b = b_0$

$$\sigma_{\text{allow}} = \frac{3wL^2}{t^2 b_0} \qquad \textbf{(2)}$$

Equating Eqs. (1) and (2) yields:

$$\frac{3wx^2}{t^2 b} = \frac{3wL^2}{t^2 b_0}$$

$$b = \frac{b_0}{L^2} x^2 \qquad \textbf{Ans.}$$

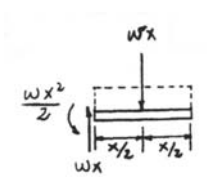

Ans:

$$b = \frac{b_0}{L^2} x^2$$

11–39. The tubular shaft has an inner diameter of 15 mm. Determine to the nearest millimeter its minimum outer diameter if it is subjected to the gear loading. The bearings at A and B exert force components only in the y and z directions on the shaft. Use an allowable shear stress of $\tau_{\text{allow}} = 70$ MPa, and base the design on the maximum-shear-stress theory of failure.

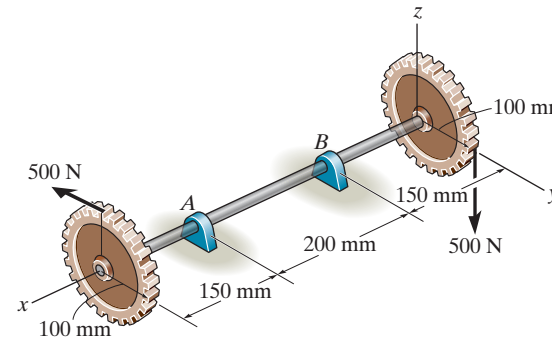

$$I = \frac{\pi}{4}(c^4 - 0.0075^4) \text{ and } J = \frac{\pi}{2}(c^4 - 0.0075^4)$$

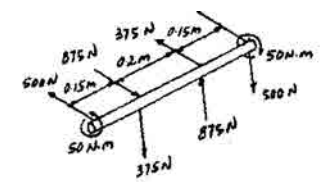

$$\tau_{\text{allow}} = \sqrt{\left(\frac{\sigma_x - \sigma_y}{2}\right)^2 + \tau_{xy}^2}$$

$$\tau_{\text{allow}} = \sqrt{\left(\frac{Mc}{2I}\right)^2 + \left(\frac{Tc}{J}\right)^2}$$

$$\tau_{\text{allow}}^2 = \frac{M^2c^2}{4I^2} + \frac{T^2c^2}{J^2}$$

$$\tau_{\text{allow}}^2\left(\frac{c^4 - 0.0075^4}{c}\right)^2 = \frac{4M^2}{\pi^2} + \frac{4T^2}{\pi^2}$$

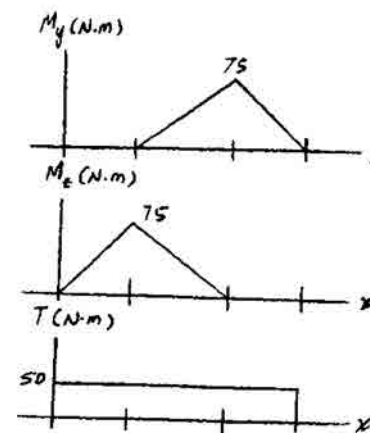

$$\frac{c^4 - 0.0075^4}{c} = \frac{2}{\pi\,\tau_{\text{allow}}}\sqrt{M^2 + T^2}$$

$$\frac{c^4 - 0.0075^4}{c} = \frac{2}{\pi(70)(10^6)}\sqrt{75^2 + 50^2}$$

$$c^4 - 0.0075^4 = 0.8198(10^{-6})c$$

Solving, $c = 0.0103976$ m

$d = 2c = 0.0207952$ m $= 20.8$ mm

Use $d = 21$ mm **Ans.**

Ans:
Use $d = 21$ mm

***11–40.** Determine to the nearest millimeter the minimum diameter of the solid shaft if it is subjected to the gear loading. The bearings at A and B exert force components only in the y and z directions on the shaft. Base the design on the maximum-distortion-energy theory of failure with $\sigma_{\text{allow}} = 150$ MPa.

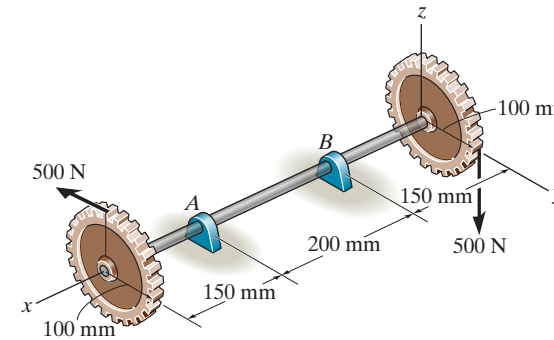

$$\sigma_{1,2} = \frac{\sigma_x}{2} \pm \sqrt{\frac{\sigma_x^2}{4} + \tau_{xy}^2}$$

Let $a = \dfrac{\sigma_x}{2}$, $b = \sqrt{\dfrac{\sigma_x^2}{4} + \tau_{xy}^2}$

$$\sigma_1 = a + b, \quad \sigma_2 = a - b$$

Require,

$$\sigma_1^2 - \sigma_1\sigma_2 + \sigma_2^2 = \sigma_{\text{allow}}^2$$

$$a^2 + 2ab + b^2 - [a^2 - b^2] + a^2 - 2ab + b^2 = \sigma_{\text{allow}}$$

$$a^2 + 3b^2 = \sigma_{\text{allow}}^2$$

$$\frac{\sigma_x^2}{4} + 3\left(\frac{\sigma_x^2}{4} + \tau_{xy}^2\right) = \sigma_{\text{allow}}^2$$

$$\sigma_x^2 + 3\tau_{xy}^2 = \sigma_{\text{allow}}^2$$

$$\left(\frac{Mc}{\frac{\pi}{4}c^4}\right)^2 + 3\left(\frac{Tc}{\frac{\pi}{2}c^4}\right)^2 = \sigma_{\text{allow}}^2$$

$$\frac{1}{c^6}\left[\left(\frac{4M}{\pi}\right)^2 + 3\left(\frac{2T}{\pi}\right)^2\right] = \sigma_{\text{allow}}^2$$

$$c^6 = \frac{16}{\sigma_{\text{allow}}^2\pi^2}M^2 + \frac{12T^2}{\sigma_{\text{allow}}^2\pi^2}$$

$$c = \left(\frac{4}{\sigma_{\text{allow}}^2\pi^2}(4M^2 + 3T^2)\right)^{\frac{1}{6}}$$

$$= \left[\frac{4}{(150(10^6))^2(\pi)^2}(4(75)^2 + 3(50)^2)\right]^{\frac{1}{6}} \infty\ 0.009025 \text{ m}$$

$$d = 2c = 0.0181 \text{ m}$$

Use $d = 19$ mm **Ans.**

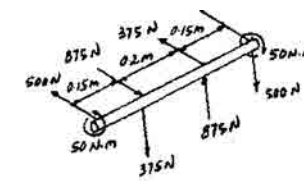

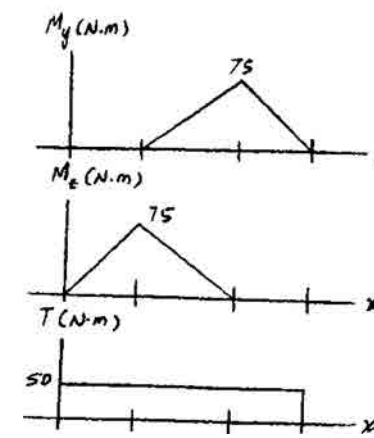

11–41. The 50-mm diameter shaft is supported by a smooth thrust bearing at A and a smooth journal bearing at B. If the pulleys C and D are subjected to the vertical and horizontal loadings shown, determine the absolute maximum bending stress in the shaft.

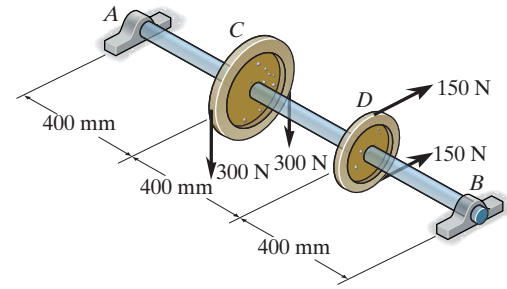

Internal Moment Components: The shaft is subjected to two bending moment components $\mathbf{M}_z$ and $\mathbf{M}_y$.

Bending Stress: Since all the axes through the centroid of the circular cross section of the shaft are principal axes, then the resultant moment $M = \sqrt{M_y{}^2 + M_z{}^2}$ can be used to determine the maximum bending stress. The maximum bending moment occurs at C ($x = 0.4$ m). Then, $M_{\max} = \sqrt{40^2 + 160^2} = 164.92\ \text{N}\cdot\text{m}$.

$$\sigma_{\max} = \frac{M_{\max}\, c}{I}$$

$$= \frac{164.92(0.025)}{\frac{\pi}{4}(0.025^4)}$$

$$= 13.439\ \text{MPa} = 13.4\ \text{MPa} \qquad \textbf{Ans.}$$

Ans:
$\sigma_{\max} = 13.4$ MPa

11–42. The shaft is supported by a smooth thrust bearing at A and a smooth journal bearing at B. If shaft is made from material having an allowable bending stress of $\sigma_{\text{allow}} = 150$ MPa, determine the minimum diameter of the shaft to the nearest millimeter.

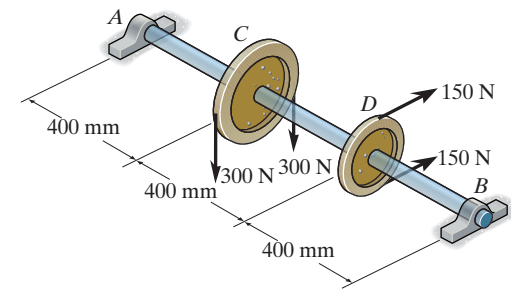

Internal Moment Components: The shaft is subjected to two bending moment components $\mathbf{M}_z$ and $\mathbf{M}_y$.

Bending Stress: Since all the axes through the centroid of the circular cross section of the shaft are principal axes, then the resultant moment $M = \sqrt{M_y^2 + M_z^2}$ can be used for design. The maximum bending moment occurs at C ($x = 0.4$ m). Then, $M_{\max} = \sqrt{40^2 + 160^2} = 164.92\ \text{N}\cdot\text{m}$.

$$\sigma_{\text{allow}} = \frac{M_{\max} c}{I}; \qquad 150(10^6) = \frac{164.92\left(\frac{d}{2}\right)}{\frac{\pi}{4}\left(\frac{d}{2}\right)^4}$$

$$d = 0.02237\ \text{m}$$

Use $\quad d = 23$ mm **Ans.**

Ans:
Use $d = 23$ mm

11–43. The two pulleys attached to the shaft are loaded as shown. If the bearings at A and B exert only vertical forces on the shaft, determine the required diameter of the shaft to the nearest $\frac{1}{8}$ in. using the maximum-shear-stress theory. $\tau_{\text{allow}} = 12$ ksi.

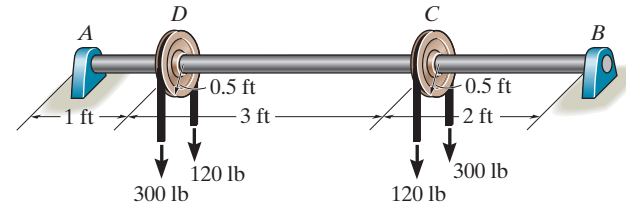

Section just to the left of point C is the most critical.

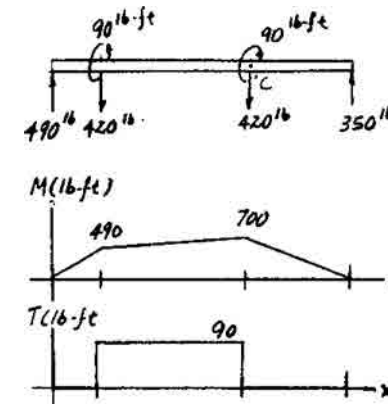

$$c = \left(\frac{2}{\pi\,\tau_{\text{allow}}}\sqrt{M^2 + T^2}\right)^{1/3} = \left(\frac{2}{\pi(12)(10^3)}\sqrt{[700(12)]^2 + [90(12)]^2}\right)^{1/3}$$

$c = 0.766$ in.

$d = 2c = 1.53$ in.

Use $d = 1\frac{5}{8}$ in. **Ans.**

Ans:

Use $d = 1\frac{5}{8}$ in.

***11–44.** The two pulleys attached to the shaft are loaded as shown. If the bearings at A and B exert only vertical forces on the shaft, determine the required diameter of the shaft to the nearest $\frac{1}{8}$ in. using the maximum-distortion energy theory. $\sigma_{\text{allow}} = 67$ ksi.

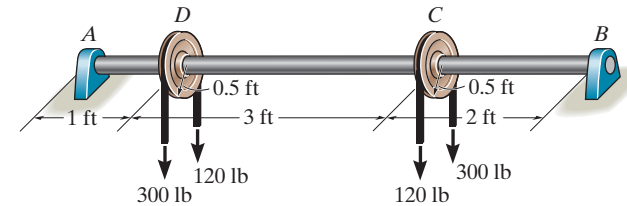

Section just to the left of point C is the most critical. Both states of stress will yield the same result.

$$\sigma_{a,b} = \frac{\sigma}{2} \pm \sqrt{\left(\frac{\sigma}{2}\right)^2 + \tau^2}$$

Let $\frac{\sigma}{2} = A$ and $\sqrt{\left(\frac{\sigma}{2}\right)^2 + \tau^2} = B$

$$\sigma_a^2 = (A + B)^2 \qquad \sigma_b^2 = (A - B)^2$$

$$\sigma_a \sigma_b = (A + B)(A - B)$$

$$\sigma_a^2 - \sigma_a \sigma_b + \sigma_b^2 = A^2 + B^2 + 2AB - A^2 + B^2 + A^2 + B^2 - 2AB$$

$$= A^2 + 3B^2$$

$$= \frac{\sigma^2}{4} + 3\left(\frac{\sigma^2}{4} + \tau^2\right)$$

$$= \sigma^2 + 3\tau^2$$

$$\sigma_a^2 - \sigma_a \sigma_b + \sigma_b^2 = \sigma_{\text{allow}}^2$$

$$\sigma^2 + 3\tau^2 = \sigma_{\text{allow}}^2 \qquad (1)$$

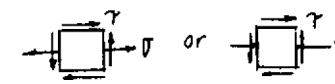

$$\sigma = \frac{Mc}{I} = \frac{Mc}{\frac{\pi}{4}c^4} = \frac{4M}{\pi c^3}$$

$$\tau = \frac{Tc}{J} = \frac{Tc}{\frac{\pi}{2}c^4} = \frac{2T}{\pi c^3}$$

From Eq (1)

$$\frac{16M^2}{\pi^2 c^6} + \frac{12T^2}{\pi^2 c^6} = \sigma_{\text{allow}}^2$$

$$c = \left(\frac{16M^2 + 12T^2}{\pi^2 \sigma_{\text{allow}}^2}\right)^{1/6} = \left(\frac{16((700)(12))^2 + 12((90)(12))^2}{\pi^2((67)(10^3))^2}\right)^{1/6}$$

$$c = 0.544 \text{ in.}$$

$$d = 2c = 1.087 \text{ in.}$$

Use $d = 1\frac{1}{8}$ in. **Ans.**

11–45. The bearings at A and D exert only y and z components of force on the shaft. If $\tau_{\text{allow}} = 60$ MPa, determine to the nearest millimeter the smallest-diameter shaft that will support the loading. Use the maximum-shear-stress theory of failure.

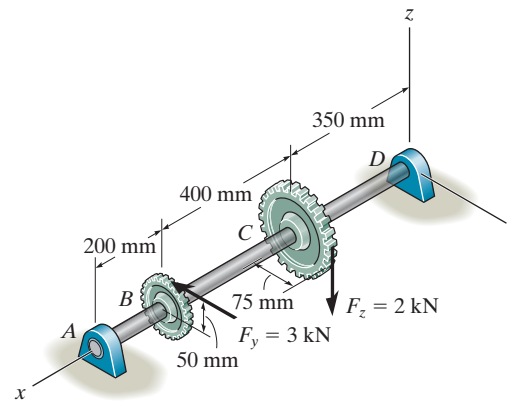

Critical moment is at point B:

$$M = \sqrt{(473.7)^2 + (147.4)^2} = 496.1 \text{ N}\cdot\text{m}$$

$$T = 150 \text{ N}\cdot\text{m}$$

$$c = \left(\frac{2}{\pi\,\tau_{\text{allow}}}\sqrt{M^2 + T^2}\right)^{1/3} = \left(\frac{2}{\pi(60)(10^6)}\sqrt{496.1^2 + 150^2}\right)^{1/3} = 0.0176 \text{ m}$$

$$c = 0.0176 \text{ m} = 17.6 \text{ mm}$$

$$d = 2c = 35.3 \text{ mm}$$

Use $d = 36$ mm **Ans.**

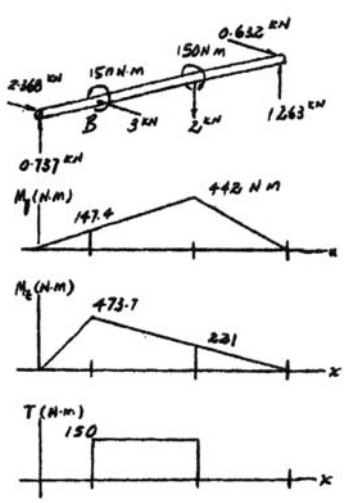

Ans:
Use $d = 36$ mm

11–46. The bearings at A and D exert only y and z components of force on the shaft. If $\sigma_{\text{allow}} = 130$ MPa, determine to the nearest millimeter the smallest-diameter shaft that will support the loading. Use the maximum-distortion-energy theory of failure.

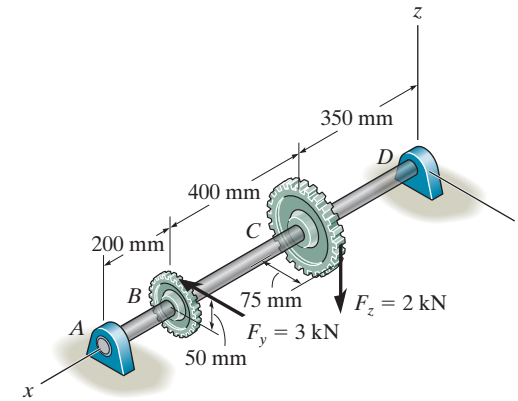

The critical moment is at B.

$$M = \sqrt{(473.7)^2 + (147.4)^2} = 496.1 \text{ N}\cdot\text{m}$$

$$T = 150 \text{ N}\cdot\text{m}$$

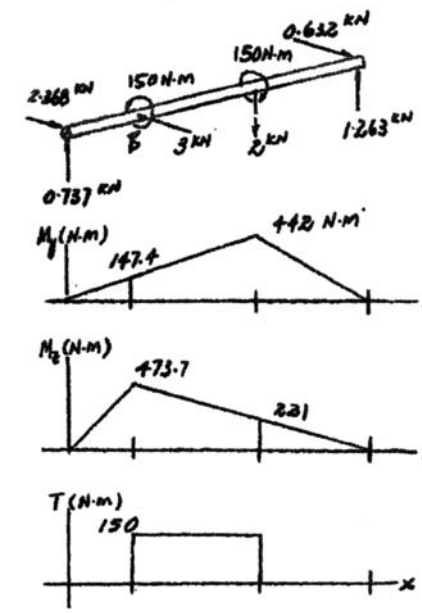

Since,

$$\sigma_{a,b} = \frac{\sigma}{2} \pm \sqrt{\left(\frac{\sigma}{2}\right)^2 + \tau^2}$$

Let $\dfrac{\sigma}{2} = A$ and $\sqrt{\left(\dfrac{\sigma}{2}\right)^2 + \tau^2} = B$

$$\sigma_a^2 = (A + B)^2 \qquad \sigma_b^2 = (A - B)^2$$

$$\sigma_a \sigma_b = (A + B)(A - B)$$

$$\sigma_a^2 - \sigma_a \sigma_b + \sigma_b^2 = A^2 + B^2 + 2AB - A^2 + B^2 + A^2 + B^2 - 2AB$$

$$= A^2 + 3B^2$$

$$= \frac{\sigma^2}{4} + 3\left(\frac{\sigma^2}{4} + \tau^2\right)$$

$$= \sigma^2 + 3\tau^2$$

$$\sigma_a^2 - \sigma_a\sigma_b + \sigma_b^2 = \sigma_{\text{allow}}^2$$

$$\sigma^2 + 3\tau^2 = \sigma_{\text{allow}}^2 \qquad \textbf{(1)}$$

$$\sigma = \frac{Mc}{I} = \frac{Mc}{\frac{\pi}{4}c^4} = \frac{4M}{\pi c^3}$$

$$\tau = \frac{Tc}{J} = \frac{Tc}{\frac{\pi}{2}c^4} = \frac{2T}{\pi c^3}$$

From Eq (1)

$$\frac{16M^2}{\pi^2 c^6} + \frac{12T^2}{\pi^2 c^6} = \sigma_{\text{allow}}^2$$

$$c = \left(\frac{16M^2 + 12T^2}{\pi^2 \sigma_{\text{allow}}^2}\right)^{1/6}$$

$$= \left(\frac{16(496.1)^2 + 12(150)^2}{\pi^2((130)(10^4))^2}\right)^{1/6} = 0.01712 \text{ m}$$

$$d = 2c = 34.3 \text{ mm}$$

Use $d = 35$ mm **Ans.**

Ans:
Use $d = 35$ mm

11–47. The cantilevered beam has a circular cross section. If it supports a force **P** at its end, determine its radius y as a function of x so that it is subjected to a constant maximum bending stress σ_{allow} throughout its length.

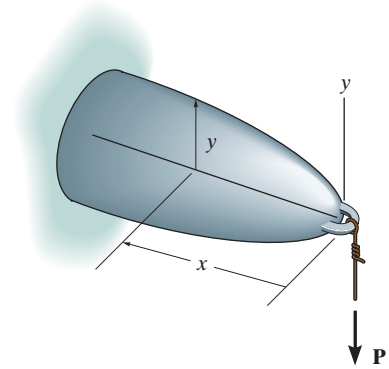

Section Properties:

$$I = \frac{\pi}{4} y^4$$

$$S = \frac{I}{c} = \frac{\frac{\pi}{4} y^4}{y} = \frac{\pi}{4} y^3$$

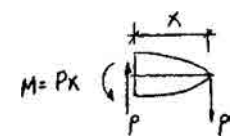

$$\sigma_{\text{allow}} = \frac{M}{S} = \frac{Px}{\frac{\pi}{4} y^3}$$

$$y = \left[\frac{4P}{\pi\, \sigma_{\text{allow}}} x\right]^{\frac{1}{3}}$$ **Ans.**

Ans:

$$y = \left[\frac{4P}{\pi \sigma_{\text{allow}}} x\right]^{\frac{1}{2}}$$

***11–48.** Select the lightest-weight steel wide-flange overhanging beam from Appendix B that will safely support the loading. Assume the support at A is a pin and the support at B is a roller. The allowable bending stress is $\sigma_{allow} = 24$ ksi and the allowable shear stress is $\tau_{allow} = 14$ ksi.

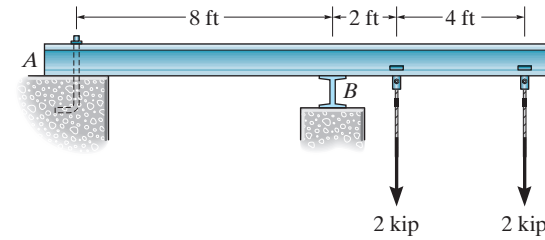

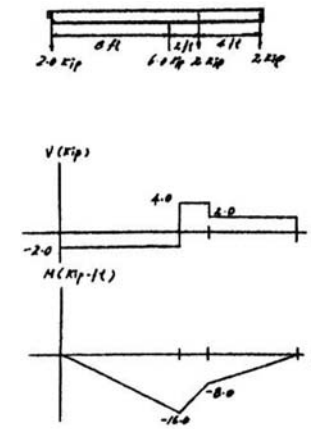

Assume bending controls.

$$S_{req'd} = \frac{M_{max}}{\sigma_{allow}} = \frac{16.0(12)}{24} = 8.0 \text{ in}^3$$

Select a W 10 × 12

$S_x = 10.9 \text{ in}^3$, $d = 9.87 \text{ in}^3$., $l_w = 0.190$ in.

Check shear:

$$\tau_{avg} = \frac{V_{max}}{A_{web}} = \frac{4}{9.87(0.190)} = 2.13 \text{ ksi} < 14 \text{ ksi} \qquad \textbf{OK}$$

Use W 10 × 12 **Ans.**

11–49. The bearings at A and B exert only x and z components of force on the steel shaft. Determine the shaft's diameter to the nearest millimeter so that it can resist the loadings of the gears without exceeding an allowable shear stress of $\tau_{\text{allow}} = 80$ MPa. Use the maximum-shear-stress theory of failure.

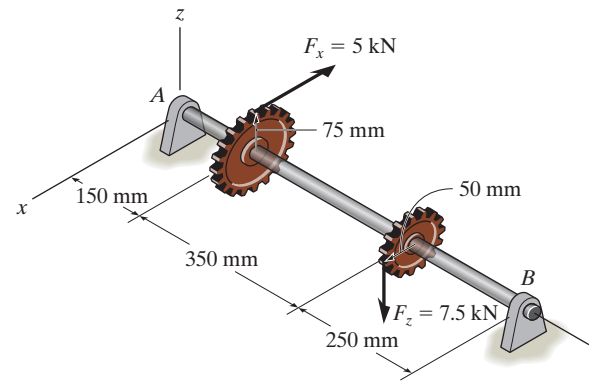

Maximum resultant moment $M = \sqrt{1250^2 + 250^2} = 1274.75\ \text{N}\cdot\text{m}$

$$c = \left[\frac{2}{\pi\,\tau_{\text{allow}}}\sqrt{M^2 + T^2}\right]^{\frac{1}{3}} = \left[\frac{2}{\pi(80)(10^6)}\sqrt{1274.75^2 + 375^2}\right]^{\frac{1}{3}} = 0.0219\ \text{m}$$

$d = 2c = 0.0439\ \text{m} = 43.9\ \text{mm}$

Use $d = 44$ mm **Ans.**

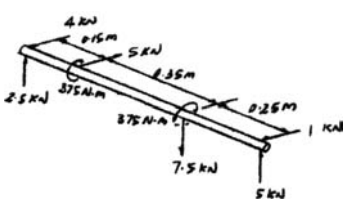

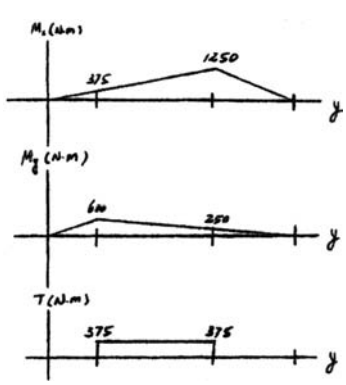

Ans:
Use $d = 44$ mm

11–50. The bearings at A and B exert only x and z components of force on the steel shaft. Determine the shaft's diameter to the nearest millimeter so that it can resist the loadings of the gears. Use the maximum-distortion-energy theory of failure with $\sigma_{\text{allow}} = 200$ MPa.

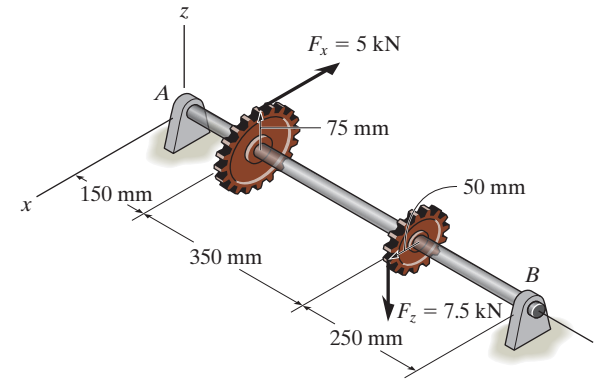

Maximum resultant moment $M = \sqrt{1250^2 + 250^2} = 1274.75\ \text{N}\cdot\text{m}$

$$\sigma_{1,2} = \frac{\sigma_x}{2} \pm \sqrt{\frac{\sigma_x^2}{4} + \tau_{xy}^2}$$

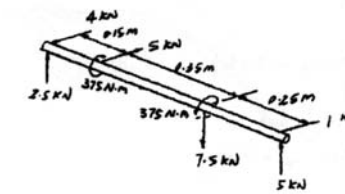

Let $a = \dfrac{\sigma_x}{2}, b = \sqrt{\dfrac{\sigma_x^2}{4} + \tau_{xy}^2}$

$$\sigma_1 = a + b, \qquad \sigma_2 = a - b$$

Require,

$$\sigma_1^2 - \sigma_1\,\sigma_2 + \sigma_2^2 = \sigma_{\text{allow}}^2$$

$$a^2 + 2ab + b^2 - [a^2 - b^2] + a^2 - 2ab + b^2 = \sigma_{\text{allow}}^2$$

$$a^2 + 3b^2 = \sigma_{\text{allow}}^2$$

$$\frac{\sigma_x^2}{4} + 3\left(\frac{\sigma_x^2}{4} + \tau_{xy}^2\right) = \sigma_{\text{allow}}^2$$

$$\sigma_x^2 + 3\tau_{xy}^2 = \sigma_{\text{allow}}^2$$

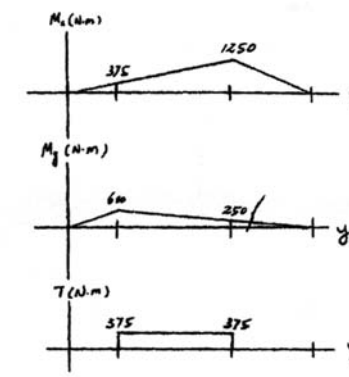

$$\left(\frac{Mc}{\frac{\pi}{4}c^4}\right)^2 + 3\left(\frac{Tc}{\frac{\pi}{2}c^4}\right)^2 = \sigma_{\text{allow}}^2$$

$$\frac{1}{c^6}\left[\left(\frac{4M}{\pi}\right)^2 + 3\left(\frac{2T}{\pi}\right)^2\right] = \sigma_{\text{allow}}^2$$

$$c^6 = \frac{16}{\sigma_{\text{allow}}^2\,\pi^2}M^2 + \frac{12T^2}{\sigma_{\text{allow}}^2\,\pi^2}$$

$$c = \left[\frac{4}{\sigma_{\text{allow}}^2\,\pi^2}(4M^2 + 3\,T^2)\right]^{\frac{1}{6}}$$

$$= \left[\frac{4}{(200(10^6))^2(\pi)^2}(4(1274.75)^2 + 3(375)^2)\right]^{\frac{1}{6}}$$

$$= 0.0203\ \text{m} = 20.3\ \text{mm}$$

$$d = 40.6\ \text{mm}$$

Use

$d = 41$ mm **Ans.**

Ans:
Use $d = 41$ mm

11–51. Select the lightest-weight steel wide-flange beam from Appendix B that will safely support the loading shown. The allowable bending stress is $\sigma_{\text{allow}} = 22$ ksi and the allowable shear stress is $\tau_{\text{allow}} = 22$ ksi.

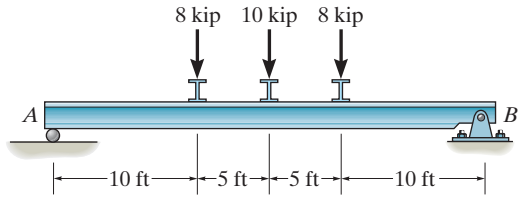

Bending Stress: From the moment diagram, $M_{\max} = 155$ kip · ft. Assume bending controls the design. Applying the flexure formula,

$$S_{\text{req'd}} = \frac{M_{\max}}{\sigma_{\text{allow}}}$$

$$= \frac{155(12)}{22} = 84.55 \text{ in}^3$$

Select W18 × 50 ($S_x = 88.9$ in^3, $d = 17.99$ in., $t_w = 0.355$ in.)

Shear Stress: Provide a shear stress check using $\tau = \dfrac{V}{t_w d}$ for a W18 × 50 wide-flange section. From the shear diagram, $V_{\max} = 13.0$ kip.

$$\tau_{\max} = \frac{V_{\max}}{t_w d}$$

$$= \frac{13.0}{0.355(17.99)}$$

$$= 2.04 \text{ ksi} < \tau_{\text{allow}} = 12 \text{ ksi } (O.K!)$$

Hence, Use W18 × 50 **Ans.**

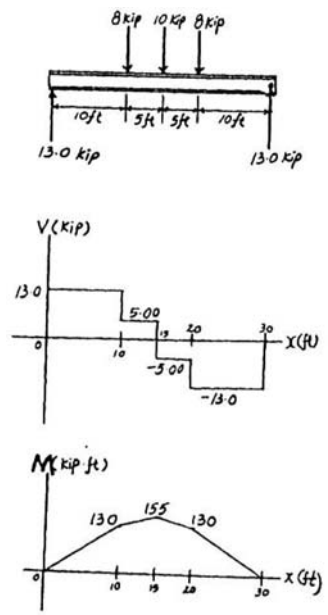

Ans:
Use W18 × 50

***11–52.** The simply supported joist is used in the construction of a floor for a building. In order to keep the floor low with respect to the sill beams C and D, the ends of the joists are notched as shown. If the allowable shear stress for the wood is $\tau_{allow} = 350$ psi and the allowable bending stress is $\sigma_{allow} = 1500$ psi, determine the height h that will cause the beam to reach both allowable stresses at the same time. Also, what load P causes this to happen? Neglect the stress concentration at the notch.

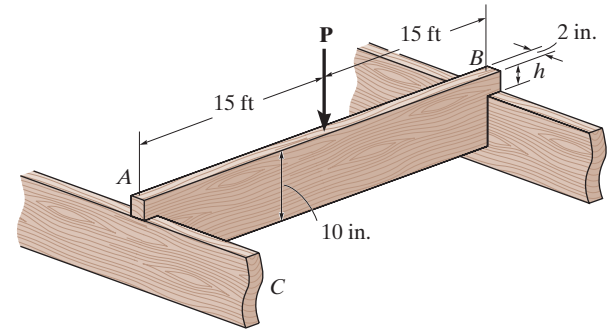

Bending Stress: From the moment diagram, $M_{max} = 7.50P$. Applying the flexure formula.

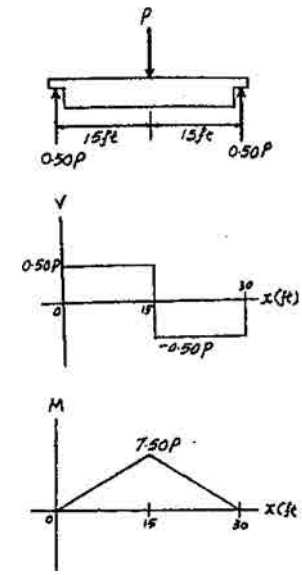

$$\sigma_{allow} = \frac{M_{max}c}{I}$$

$$1500 = \frac{7.50P(12)(5)}{\frac{1}{12}(2)(10^3)}$$

$$P = 555.56 \text{ lb} = 556 \text{ lb}$$ **Ans.**

Shear Stress: From the shear diagram, $V_{max} = 0.500P = 277.78$ lb. The notch is the critical section. Using the shear formula for a rectangular section,

$$\tau_{allow} = \frac{3V_{max}}{2A}$$

$$350 = \frac{3(277.78)}{2(2)h}$$

$$h = 0.595 \text{ in.}$$ **Ans.**

11–53. The simply supported joist is used in the construction of a floor for a building. In order to keep the floor low with respect to the sill beams C and D, the ends of the joists are notched as shown. If the allowable shear stress for the wood is $\tau_{\text{allow}} = 350$ psi and the allowable bending stress is $\sigma_{\text{allow}} = 1700$ psi, determine the smallest height h so that the beam will support a load of $P = 600$ lb. Also, will the entire joist safely support the load? Neglect the stress concentration at the notch.

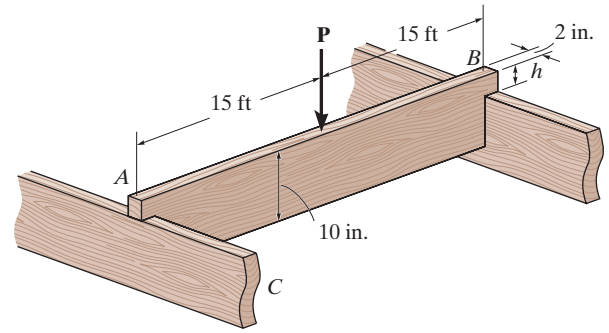

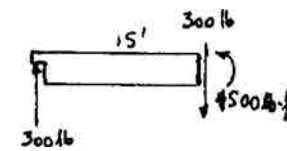

The reaction at the support is $\dfrac{600}{2} = 300$ lb

$$\tau_{\text{allow}} = \frac{1.5V}{A}; \qquad 350 = \frac{1.5(300)}{(2)(h)}$$

$h = 0.643$ in. **Ans.**

$$\sigma_{\max} = \frac{M_{\max}c}{I} = \frac{4500(12)(5)}{\frac{1}{12}(2)(10)^3} = 1620 \text{ psi} < 1700 \text{ psi} \quad \text{OK}$$

Yes, the joist will safely support the load. **Ans.**

Ans:
$h = 0.643$ in. Yes, the joist will support the load.

11–54. The overhang beam is constructed using two 2-in. by 4-in. pieces of wood braced as shown. If the allowable bending stress is $\sigma_{\text{allow}} = 600$ psi, determine the largest load P that can be applied. Also, determine the associated maximum spacing of nails, s, along the beam section AC if each nail can resist a shear force of 800 lb. Assume the beam is pin connected at A, B, and D. Neglect the axial force developed in the beam along DA.

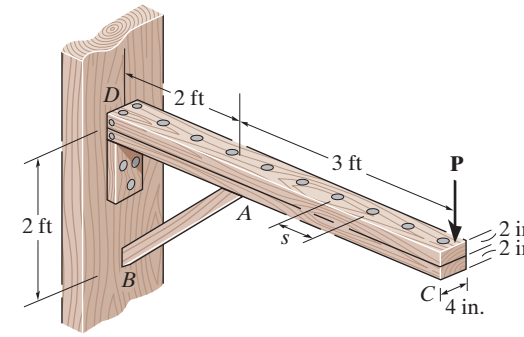

$M_A = M_{\max} = 3P$

Section Properties:

$$I = \frac{1}{12}(4)(4)^3 = 21.33 \text{ in}^4$$

$$S = \frac{I}{c} = \frac{21.33}{2} = 10.67 \text{ in}^3$$

$$M_{\max} = \sigma_{\text{allow}} S$$

$$3P(12) = 600(10.67)$$

$$P = 177.78 = 178 \text{ lb}$$ **Ans.**

Nail Spacing:

$$V = P = 177.78 \text{ lb}$$

$$Q = (4)(2)(1) = 8 \text{ in}^3$$

$$q = \frac{VQ}{I} = \frac{177.78(8)}{21.33} = 66.67 \text{ lb/in.}$$

$$s = \frac{800 \text{ lb}}{66.67 \text{ lb/in.}} = 12.0 \text{ in.}$$ **Ans.**

Ans:
$P = 178$ lb, $s = 12.0$ in.

12–1. An L2 steel strap having a thickness of 0.125 in. and a width of 2 in. is bent into a circular arc of radius 600 in. Determine the maximum bending stress in the strap.

$$\frac{1}{\rho} = \frac{M}{EI}, \qquad M = \frac{EI}{\rho}$$

However,

$$\sigma = \frac{Mc}{I} = \frac{(EI/\rho)c}{I} = \left(\frac{c}{\rho}\right)E$$

$$\sigma = \frac{0.0625}{600}(29)(10^3) = 3.02 \text{ ksi}$$ **Ans.**

Ans:
$\sigma = 3.02$ ksi

12–2. The L2 steel blade of the band saw wraps around the pulley having a radius of 12 in. Determine the maximum normal stress in the blade. The blade has a width of 0.75 in. and a thickness of 0.0625 in.

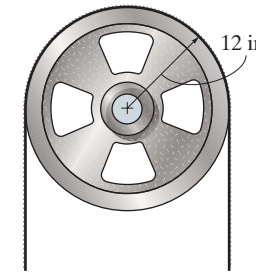

$$\frac{1}{\rho} = \frac{M}{EI}; \qquad M = \frac{EI}{\rho}$$

However,

$$\sigma = \frac{Mc}{I} = \frac{(EI/\rho)c}{I} = \left(\frac{c}{\rho}\right)E$$

$$\sigma = \left(\frac{0.03125}{12}\right)(29)(10^3) = 75.5 \text{ ksi}$$ **Ans.**

Ans:
$\sigma = 75.5$ ksi

12–3. A picture is taken of a man performing a pole vault, and the minimum radius of curvature of the pole is estimated by measurement to be 4.5 m. If the pole is 40 mm in diameter and it is made of a glass-reinforced plastic for which $E_g = 131$ GPa, determine the maximum bending stress in the pole.

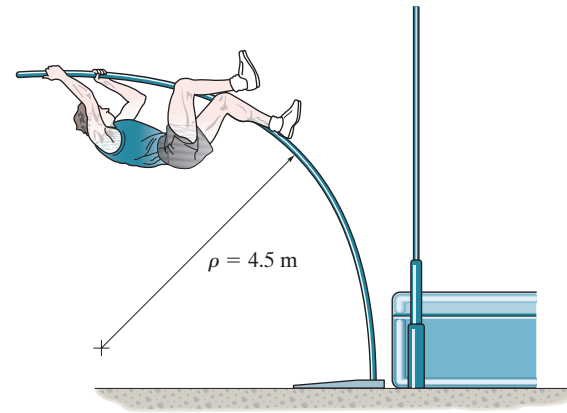

Moment-Curvature Relationship:

$$\frac{1}{\rho} = \frac{M}{EI} \qquad \text{however,} \qquad M = \frac{I}{c}\sigma$$

$$\frac{1}{\rho} = \frac{\frac{I}{c}\sigma}{EI}$$

$$\sigma = \frac{c}{\rho}E = \left(\frac{0.02}{4.5}\right)\left[131\left(10^9\right)\right] = 582 \text{ MPa} \qquad \textbf{Ans.}$$

Ans:
$\sigma = 582$ MPa

***12–4.** Determine the equations of the elastic curve using the x_1 and x_2 coordinates. EI is constant.

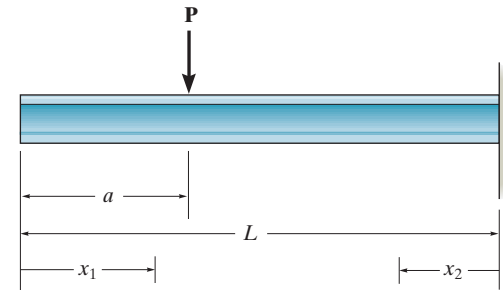

$$EI\frac{d^1v_1}{dx_1^2} = M_1(x)$$

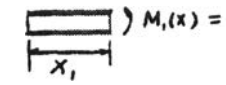

$$M_1(x) = 0; \qquad EI\frac{d^2v_1}{dx_1^2} = 0$$

$$EI\frac{dv_1}{dx_1} = C_1 \tag{1}$$

$$EI\,v_1 = C_1x_1 + C_2 \tag{2}$$

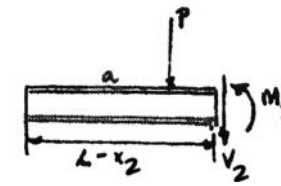

$$M_2(x) = Px_2 - P(L - a)$$

$$EI\frac{d^2v_2}{dx_2^2} = Px_2 - P(L - a)$$

$$EI\frac{dv_2}{dx_2} = \frac{P}{2}x_2^2 - P(L - a)x_2 + C_3 \tag{3}$$

$$EI\,v_2 = \frac{P}{6}x_2^3 - \frac{P(L - a)x_2^2}{2} + C_3x_2 + C_4 \tag{4}$$

Boundary Conditions:

At $x_2 = 0$, $\qquad \dfrac{dv_2}{dx_2} = 0$

From Eq. (3), $\qquad 0 = C_3$

At $x_2 = 0, v_2 = 0$

$0 = C_4$

Continuity Condition:

At $x_1 = a, x_2 = L - a$; $\qquad \dfrac{dv_1}{dx_1} = -\dfrac{dv_2}{dx_2}$

From Eqs. (1) and (3),

$$C_1 = -\left[\frac{P(L - a)^2}{2} - P(L - a)^2\right]; \qquad C_1 = \frac{P(L - a)^2}{2}$$

At $x_1 = a, x_2 = L - a, v_1 = v_2$

12–4. Continued

From Eqs. (2) and (4),

$$\left(\frac{P(L-a)^2}{2}\right)a + C_2 = \frac{P(L-a)^3}{6} - \frac{P(L-a)^3}{2}$$

$$C_2 = -\frac{Pa(L-a)^2}{2} - \frac{P(L-a)^3}{3}$$

From Eq. (2),

$$v_1 = \frac{P}{6EI}[3(L-a)^2x_1 - 3a(L-a)^2 - 2(L-a)^3] \qquad \textbf{Ans.}$$

From Eq. (4),

$$v_2 = \frac{P}{6EI}[x_2^3 - 3(L-a)x_2^2] \qquad \textbf{Ans.}$$

12–5. Determine the deflection of end C of the 100-mm-diameter solid circular shaft. The shaft is made of steel having a modulus elasticity of $E = 200$ GPa.

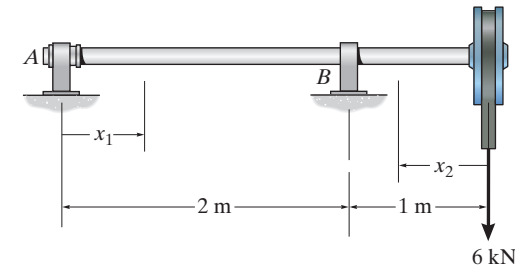

Support Reactions and Elastic Curve. As shown in Fig. *a*.

Moment Functions. Referring to the free-body diagrams of the shaft's cut segments, Fig. *b*, $M(x_1)$ is

$$\circlearrowleft + \Sigma M_O = 0; \qquad M(x_1) + 3x_1 = 0 \qquad M(x_1) = -3x_1 \text{ kN}\cdot\text{m}$$

and $M(x_2)$ is

$$\circlearrowleft + \Sigma M_O = 0; \qquad -M(x_2) - 6x_2 = 0 \qquad M(x_2) = -6x_2 \text{ kN}\cdot\text{m}$$

Equations of Slope and Elastic Curve.

$$EI\frac{d^2v}{dx^2} = M(x)$$

For coordinate x_1,

$$EI\frac{d^2v_1}{dx_1^2} = -3x_1$$

$$EI\frac{dv_1}{dx_1} = -\frac{3}{2}x_1^2 + C_1 \qquad (1)$$

$$EIv_1 = -\frac{1}{2}x_1^3 + C_1x_1 + C_2 \qquad (2)$$

For coordinate x_2,

$$EI\frac{d^2v_2}{dx_2^2} = -6x_2$$

$$EI\frac{dv_2}{dx_2} = -3x_2^2 + C_3 \qquad (3)$$

$$EIv_2 = -x_2^3 + C_3x_2 + C_4 \qquad (4)$$

Boundary Conditions. At $x_1 = 0$, $v_1 = 0$. Then, Eq. (2) gives

$$EI(0) = -\frac{1}{2}(0^3) + C_1(0) + C_2 \qquad C_2 = 0$$

At $x_1 = 2$ m, $v_1 = 0$. Then, Eq. (2) gives

$$EI(0) = -\frac{1}{2}(2^3) + C_1(2) + 0 \qquad C_1 = 2 \text{ kN}\cdot\text{m}^2$$

12–5. Continued

At $x_2 = 1$ m, $v_2 = 0$. Then, Eq. (4) gives

$$EI(0) = -(1^3) + C_3(1) + C_4$$

$$C_3 + C_4 = 1 \qquad (5)$$

Continuity Conditions. At $x_1 = 2$ m and $x_2 = 1$, $\frac{dv_1}{dx_1} = -\frac{dv_2}{dx_2}$. Thus, Eqs. (1) and (3) give

$$-\frac{3}{2}(2^2) + 2 = -[-3(1^2) + C_3] \qquad C_3 = 7\ \text{kN}\cdot\text{m}^2$$

Substituting the values of C_3 into Eq. (5),

$$C_4 = -6\ \text{kN}\cdot\text{m}^3$$

Substituting the values of C_3 and C_4 into Eq. (4),

$$v_2 = \frac{1}{EI}(-x_2^3 + 7x_2 - 6)$$

$$v_C = v_2|_{x_2=0} = -\frac{6\ \text{kN}\cdot\text{m}^3}{EI}$$

$$= -\frac{6(10^3)}{200(10^9)\left[\frac{\pi}{4}(0.05^4)\right]} = -0.006112\ \text{m} = 6.11\ \text{mm}\downarrow \qquad \textbf{Ans.}$$

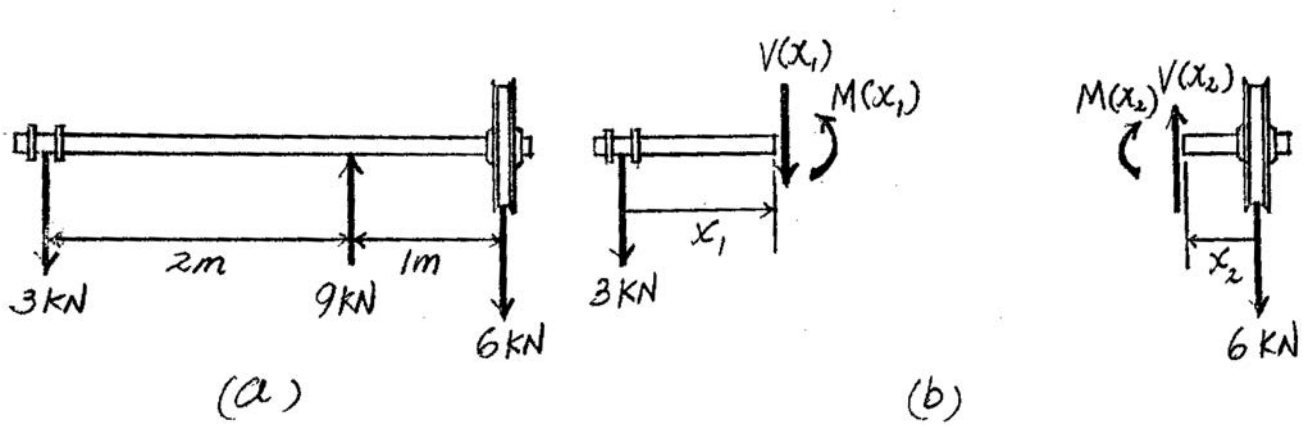

Ans:
$v_C = 6.11$ mm$\downarrow$

12–6. Determine the equations of the elastic curve for the beam using the x_1 and x_3 coordinates. Specify the beam's maximum deflection. EI is constant.

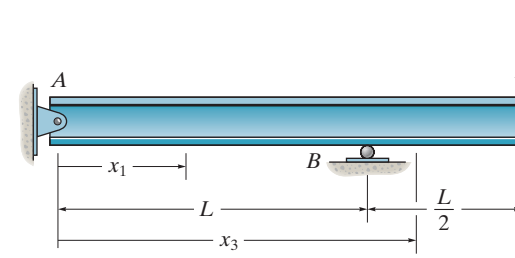

Support Reactions and Elastic Curve: As shown on FBD(a).

Moment Function: As shown on FBD(b) and (c).

Slope and Elastic Curve:

$$EI\frac{d^2v}{dx^2} = M(x)$$

For $M(x_1) = -\frac{P}{2}x_1$.

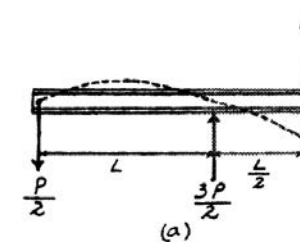

$$EI\frac{d^2v_1}{dx_1^2} = -\frac{P}{2}x_1$$

$$EI\frac{dv_1}{dx_1} = -\frac{P}{4}x_1^2 + C_1 \qquad (1)$$

$$EI\,v_1 = -\frac{P}{12}x_1^3 + C_1x_1 + C_2 \qquad (2)$$

For $M(x_3) = Px_3 - \frac{3PL}{2}$,

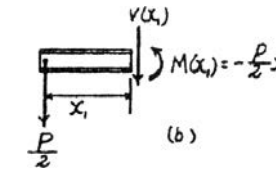

$$EI\frac{d^2v_3}{dx_3^2} = Px_3 - \frac{3PL}{2}$$

$$EI\frac{dv_3}{dx_3} = \frac{P}{2}x_3^2 - \frac{3PL}{2}x_3 + C_3 \qquad (3)$$

$$EI\,v_3 = \frac{P}{6}x_3^3 - \frac{3PL}{4}x_3^3 + C_3x_3 + C_4 \qquad (4)$$

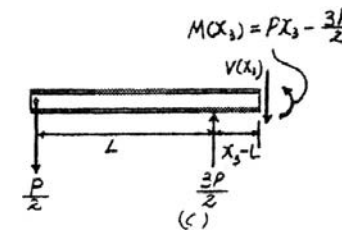

Boundary Conditions:

$v_1 = 0$ at $x_1 = 0$. From Eq. (2), $C_2 = 0$

$v_1 = 0$ at $x_1 = L$. From Eq. (2).

$$0 = -\frac{PL^3}{12} + C_1L \qquad C_1 = \frac{PL^2}{12}$$

$v_3 = 0$ at $x_3 = L$. From Eq. (4).

$$0 = \frac{PL^3}{6} - \frac{3PL^3}{4} + C_3L + C_4$$

$$0 = -\frac{7PL^3}{12} + C_3L + C_4 \qquad (5)$$

Continuity Condition:

At $x_1 = x_3 = L$, $\frac{dv_1}{dx_1} = \frac{dv_3}{dx_3}$. From Eqs. (1) and (3),

$$-\frac{PL^2}{4} + \frac{PL^2}{12} = \frac{PL^2}{2} - \frac{3PL^2}{2} + C_3 \qquad C_3 = \frac{5PL^2}{6}$$

From Eq. (5), $C_4 = -\frac{PL^3}{4}$

12–6. Continued

The Slope: Substitute the value of C_1 into Eq. (1),

$$\frac{dv_1}{dx_1} = \frac{P}{12EI}\left(L^2 - 3x_1^2\right)$$

$$\frac{dv_1}{dx_1} = 0 = \frac{P}{12EI}\left(L^2 - 3x_1^2\right) \qquad x_1 = \frac{L}{\sqrt{3}}$$

The Elastic Curve: Substitute the values of C_1, C_2, C_3, and C_4 into Eqs. (2) and (4), respectively,

$$v_1 = \frac{Px_1}{12EI}\left(-x_1^2 + L^2\right) \qquad \textbf{Ans.}$$

$$v_D = v_1\big|_{x_1=\frac{L}{\sqrt{3}}} = \frac{P\left(\frac{L}{\sqrt{3}}\right)}{12EI}\left(-\frac{L^3}{3} + L^2\right) = \frac{0.0321PL^3}{EI}$$

$$v_3 = \frac{P}{12EI}\left(2x_3^3 - 9Lx_3^2 + 10L^2x_3 - 3L^3\right) \qquad \textbf{Ans.}$$

$$v_C = v_3\big|_{x_3=\frac{3}{2}L}$$

$$= \frac{P}{12EI}\left[2\left(\frac{3}{2}L\right)^3 - 9L\left(\frac{3}{2}L\right)^2 + 10L^2\left(\frac{3}{2}L\right) - 3L^3\right]$$

$$= -\frac{PL^3}{8EI}$$

Hence, $v_{\max} = v_C = \dfrac{PL^3}{8EI}\downarrow$ **Ans.**

Ans:

$v_1 = \dfrac{Px_1}{12EI}(-x_1^2 + L^2)$,

$v_3 = \dfrac{P}{12EI}(2x_3^3 - 9Lx_3^2 + 10L^2x_3 - 3L^3)$,

$v_{\max} = \dfrac{PL^3}{8EI}\downarrow$

12–7. The beam is made of two rods and is subjected to the concentrated load **P**. Determine the maximum deflection of the beam if the moments of inertia of the rods are I_{AB} and I_{BC}, and the modulus of elasticity is E.

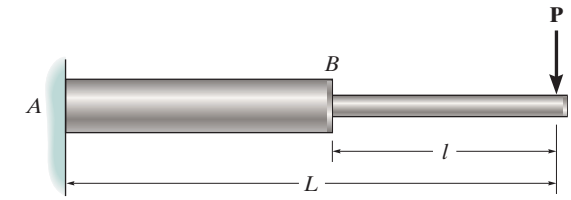

$$EI\frac{d^2v}{dx^2} = M(x)$$

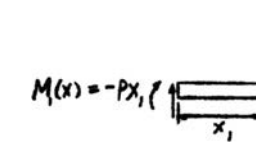

$$M_1(x) = -Px_1$$

$$EI_{BC}\frac{d^2v_1}{dx_1{}^2} = -Px_1$$

$$EI_{BC}\frac{dv_1}{dx_1} = -\frac{Px_1^2}{2} + C_1 \qquad (1)$$

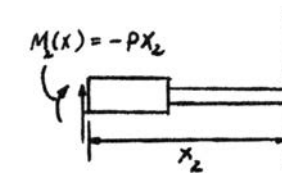

$$EI_{BC}\,v_1 = -\frac{Px_1^3}{6} + C_1x_1 + C_2 \qquad (2)$$

$$M_2(x) = -Px_2$$

$$EI_{AB}\frac{d^2v_2}{dx_2{}^2} = -Px_2$$

$$EI_{AB}\frac{dv_2}{dx_2} = -\frac{P}{2}x_2{}^2 + C_3 \qquad (3)$$

$$EI_{AB}\,v_2 = -\frac{P}{6}x_2{}^3 + C_3x_2 + C_4 \qquad (4)$$

Boundary Conditions:

At $x_2 = L, \dfrac{dv_2}{dx_2} = 0$

$$0 = -\frac{PL^2}{2} + C_3; \qquad C_3 = \frac{PL^2}{2}$$

At $x_2 = L, v = 0$

$$0 = -\frac{PL^3}{6} + \frac{PL^3}{2} + C_4; \qquad C_4 = -\frac{PL^3}{3}$$

Continuity Conditions:

At $x_1 = x_2 = l, \dfrac{dv_1}{dx_1} = \dfrac{dv_2}{dx_2}$

12–7. Continued

From Eqs. (1) and (3),

$$\frac{1}{EI_{BC}}\left[-\frac{PI^2}{2}+C_1\right]=\frac{1}{EI_{AB}}\left[-\frac{PI^2}{2}+\frac{PL^2}{2}\right]$$

$$C_1=\frac{I_{BC}}{I_{AB}}\left[-\frac{Pl^2}{2}+\frac{PL^2}{2}\right]+\frac{Pl^2}{2}$$

At $x_1 = x_2 = l, v_1 = v_2$

From Eqs. (2) and (4),

$$\frac{1}{EI_{BC}}\left\{-\frac{Pl^3}{6}+\left[\frac{I_{BC}}{I_{AB}}\left(-\frac{Pl^2}{2}+\frac{PL^2}{2}\right)+\frac{Pl^2}{2}\right]l+C_2\right\}$$

$$=\frac{1}{EI_{AB}}\left[-\frac{Pl^3}{6}+\frac{PL^2l}{2}-\frac{PL^3}{3}\right]$$

$$C_2=\frac{I_{BC}}{I_{AB}}\frac{Pl^3}{3}-\frac{I_{BC}}{I_{AB}}\frac{PL^3}{3}-\frac{Pl^3}{3}$$

Therefore,

$$v_1=\frac{1}{EI_{BC}}\left\{-\frac{Px_1{}^3}{6}+\left[\frac{I_{BC}}{I_{AB}}\left(-\frac{Pl^2}{2}+\frac{PL^2}{2}\right)+\frac{Pl^2}{2}\right]x_1\right.$$

$$\left.+\frac{I_{BC}}{I_{AB}}\frac{Pl^3}{3}-\frac{I_{BC}}{I_{AB}}\frac{PL^3}{3}-\frac{Pl^3}{3}\right\}$$

At $x_1 = 0, v_1|_{x=0} = v_{\max}$

$$v_{\max}=\frac{I}{EI_{BC}}\left\{\frac{I_{BC}}{I_{AB}}\frac{Pl^3}{3}-\frac{I_{BC}}{I_{AB}}\frac{PL^3}{3}-\frac{Pl^3}{3}\right\}=\frac{P}{3EI_{AB}}\left\{l^3-L^3-\left(\frac{I_{AB}}{I_{BC}}\right)l^3\right\}$$

$$=\frac{P}{3EI_{AB}}\left\{\left(1-\frac{I_{AB}}{I_{BC}}\right)l^3-L^3\right\}$$ **Ans.**

Ans:

$$v_{\max}=\frac{P}{3EI_{AB}}\left\{\left(1-\frac{I_{AB}}{I_{BC}}\right)l^3-L^3\right\}$$

***12–8.** The shaft is supported at A by a journal bearing that exerts only vertical reactions on the shaft, and at C by a thrust bearing that exerts horizontal and vertical reactions on the shaft. Determine the equations of the elastic curve using the coordinates x_1 and x_2. EI is constant.

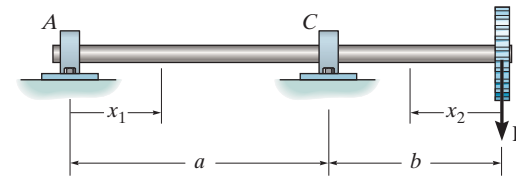

Elastic Curve and Slope:

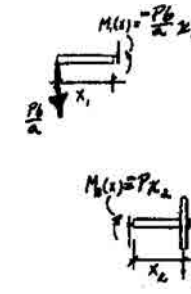

$$EI\frac{d^2v}{dx^2} = M(x)$$

For $M_1(x) = -\dfrac{Pb}{a}x_1$

$$EI\frac{d^2v_1}{dx_1^2} = -\frac{Pb}{a}x_1$$

$$EI\frac{dv_1}{dx_1} = -\frac{Pb}{2a}x_1^2 + C_1 \qquad (1)$$

$$EIv_1 = -\frac{Pb}{6a}x_1^3 + C_1x_1 + C_2 \qquad (2)$$

For $M_2(x) = -Px_2$

$$EI\frac{d^2v_2}{dx_2^2} = -Px_2$$

$$EI\frac{dv_2}{dx_2} = \frac{-Px_2^2}{2} + C_3 \qquad (3)$$

$$EIv_2 = \frac{-Px_2^3}{6} + C_3x_2 + C_4 \qquad (4)$$

Boundary Conditions:

$v_1 = 0$ at $x = 0$

From Eq. (2), $C_2 = 0$

$v_1 = 0$ at $x_1 = a$

From Eq. (2),

$$0 = -\frac{Pb}{6a}a^3 + C_1a$$

$$C_1 = \frac{Pab}{6}$$

$v_2 = 0$ at $x_2 = b$

12–8. Continued

From Eq. (4),

$$0 = \frac{Pb^3}{6} + C_3 b + C_4$$

$$C_3 b + C_4 = \frac{Pb^3}{6} \qquad (5)$$

Continuity Conditions:

$$\frac{dv_1}{dx_1} = \frac{-dv_2}{dx_2} \quad \text{at} \quad x_1 = a \qquad x_2 = b$$

From Eqs. (1) and (3)

$$-\frac{Pb}{2a}(a^2) + \frac{Pab}{6} = \frac{Pb^2}{2} - C_3$$

$$C_3 = \frac{Pab}{3} + \frac{Pb^2}{2}$$

Substitute C_3 into Eq. (5)

$$C_4 = \frac{Pb^3}{3} - \frac{Pab^2}{3}$$

$$v_1 = \frac{-Pb}{6aEI}[x_1^3 - a^2 x_1] \qquad \textbf{Ans.}$$

$$v_2 = \frac{P}{6EI}(-x_2^3 + b(2a + 3b)x_2 - 2b^2(a + b)) \qquad \textbf{Ans.}$$

12–9. Determine the equations of the elastic curve for the beam using the x_1 and x_2 coordinates. EI is constant.

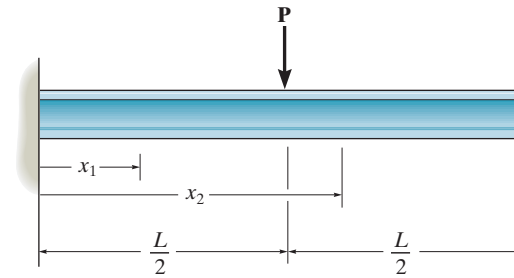

Referring to the FBDs of the beam's cut segments shown in Fig. *b* and *c*,

$$\circlearrowleft + \Sigma M_O = 0; \qquad M(x_1) + \frac{PL}{2} - Px_1 = 0 \qquad M(x_1) = Px_1 - \frac{PL}{2}$$

And

$$\circlearrowleft + \Sigma M_O = 0; \qquad M(x_2) = 0$$

$$EI\frac{d^2v}{dx^2} = M(x)$$

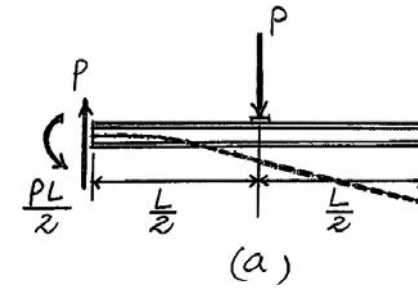

For coordinate x_1,

$$EI\frac{d^2v_1}{dx_1^2} = Px_1 - \frac{PL}{2}$$

$$EI\frac{dv_1}{dx_1} = \frac{P}{2}x_1{}^2 - \frac{PL}{2}x_1 + C_1 \qquad (1)$$

$$EI\,v_1 = \frac{P}{6}x_1{}^3 - \frac{PL}{4}x_1{}^2 + C_1x_1 + C_2 \qquad (2)$$

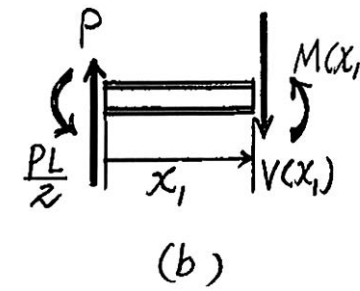

For coordinate x_2,

$$EI\frac{d^2v_2}{dx_2^2} = 0$$

$$EI\frac{dv_2}{dx_2} = C_3 \qquad (3)$$

$$EI\,v_2 = C_3x_2 = C_4 \qquad (4)$$

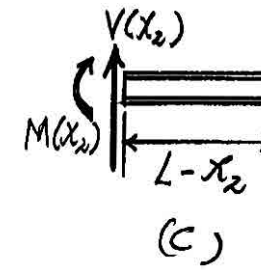

At $x_1 = 0, \frac{dv_1}{dx_1} = 0$. Then, Eq. (1) gives

$$EI(0) = \frac{P}{2}(0^2) - \frac{PL}{2}(0) + C_1 \qquad C_1 = 0$$

At $x_1 = 0, v_1 = 0$. Then, Eq(2) gives

$$EI(0) = \frac{P}{6}(0^3) - \frac{PL}{4}(0^2) + 0 + C_2 \qquad C_2 = 0$$

At $x_1 = x_2 = \frac{L}{2}, \frac{dv_1}{dx_1} = \frac{dv_2}{dx_2}$. Thus, Eqs.(1) and (3) gives

$$\frac{P}{2}\left(\frac{L}{2}\right)^2 - \frac{PL}{2}\left(\frac{L}{2}\right) = C_3 \qquad C_3 = -\frac{PL^2}{8}$$

Also, at $x_1 = x_2 = \frac{L}{2}, v_1 = v_2$. Thus, Eqs, (2) and (4) gives

$$\frac{P}{6}\left(\frac{L}{2}\right)^3 - \frac{PL}{4}\left(\frac{L}{2}\right)^2 = \left(-\frac{PL^2}{8}\right)\left(\frac{L}{2}\right) + C_4 \qquad C_4 = \frac{PL^3}{48}$$

Substitute the values of C_1 and C_2 into Eq. (2) and C_3 and C_4 into Eq (4),

$$v_1 = \frac{P}{12EI}\left(2x_1^3 - 3Lx_1^2\right) \qquad \textbf{Ans.}$$

$$v_2 = \frac{PL^2}{48EI}(-6x_2 + L) \qquad \textbf{Ans.}$$

Ans:

$$v_1 = \frac{P}{12EI}(2x_1^3 - 3x_1^2),$$

$$v_2 = \frac{PL^2}{48EI}(-6x_2 + L)$$

12–10. Determine the equations of the elastic curve for the beam using the x coordinate. Specify the slope at A and maximum deflection. EI is constant.

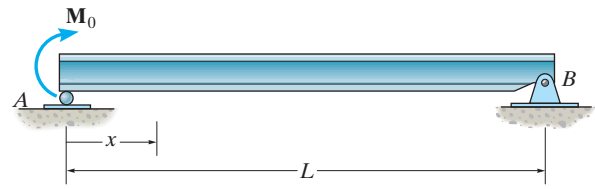

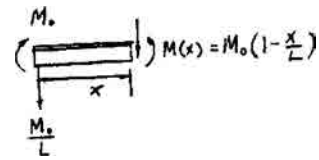

$$EI\frac{d^2v}{dx^2} = M(x)$$

$$EI\frac{d^2v}{dx^2} = M_0\left(1 - \frac{x}{L}\right)$$

$$EI\frac{dv}{dx} = M_0\left(x - \frac{x^2}{2L}\right) + C_1 \qquad (1)$$

$$EIv = M_0\left(\frac{x^2}{2} - \frac{x^3}{6L}\right) + C_1x + C_2 \qquad (2)$$

Boundary Conditions:

$v = 0 \quad \text{at} \quad x = 0$

From Eq. (2), $\quad C_2 = 0$

$v = 0 \quad \text{at} \quad x = L$

From Eq. (2),

$$0 = M_0\left(\frac{L^2}{2} - \frac{L^2}{6}\right) + C_1L; \quad C_1 = -\frac{M_0L}{3}$$

$$\frac{dv}{dx} = \frac{M_0}{EI}\left(x - \frac{x^2}{2L} - \frac{L}{3}\right) \qquad (3)$$

$$\theta_A = \left.\frac{dv}{dx}\right|_{x=0} = -\frac{M_0L}{3EI} \qquad \textbf{Ans.}$$

$$\frac{dv}{dx} = 0 = \frac{M_0}{EI}\left(x - \frac{x^2}{2L} - \frac{L}{3}\right)$$

$$3x^2 - 6Lx + 2L^2 = 0; \qquad x = 0.42265\,L$$

$$v = \frac{M_0}{6EIL}(3Lx^2 - x^3 - 2L^2x) \qquad (4) \qquad \textbf{Ans.}$$

Substitute x into v,

$$v_{\max} = \frac{-0.0642M_0L^2}{EI} \qquad \textbf{Ans.}$$

Ans:

$$\theta_A = -\frac{M_0L}{3\,EI},\ v = \frac{M_0}{6\,EIL}(3Lx^2 - x^3 - 2L^2x),$$

$$v_{\max} = \frac{-0.0642M_0L^2}{EI}$$

12–11. Determine the deflection at the center of the beam and the slope at B. EI is constant.

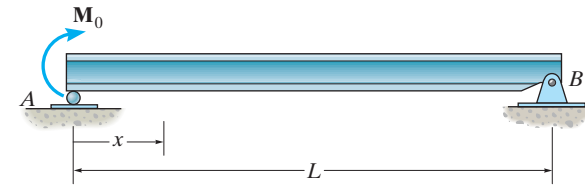

$$EI\frac{d^2v}{dx^1} = M(x)$$

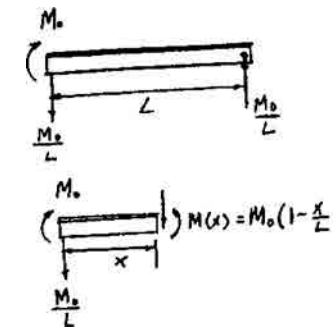

$$EI\frac{d^2v}{dx^2} = M_0\left(1 - \frac{x}{L}\right)$$

$$EI\frac{dv}{dx} = M_0\left(x - \frac{x^2}{2L}\right) + C_1 \qquad (1)$$

$$EI\,v = M_0\left(\frac{x^2}{2} - \frac{x^3}{6L}\right) + C_1x + C_2 \qquad (2)$$

Boundary Conditions:

$v = 0 \quad \text{at} \quad x = 0$

From Eq. (2), $\quad C_2 = 0$

$v = 0 \quad \text{at} \quad x = L$

From Eq. (2),

$$0 = M_0\left(\frac{L^2}{2} - \frac{L^2}{6}\right) + C_1L; \quad C_1 = -\frac{M_0L}{3}$$

$$\frac{dv}{dx} = \frac{M_0}{EI}\left(x - \frac{x^2}{2L} - \frac{L}{3}\right) \qquad (3)$$

$$\frac{dv}{dx} = 0 = \frac{M_0}{EI}\left(x - \frac{x^2}{2L} - \frac{L}{3}\right)$$

$$v = \frac{M_0}{6EIL}(3Lx^2 - x^3 - 2L^2x) \qquad (4)$$

At $x = L$,

$$\boldsymbol{\theta}_B = \left.\frac{dv}{dx}\right|_{x=L} = \frac{M_0L}{6EI} \qquad \textbf{Ans.}$$

From Eq. (4),

$$v\Big|_{x=\frac{L}{2}} = \frac{-M_0L^2}{16EI} \qquad \textbf{Ans.}$$

Ans:

$$\boldsymbol{\theta}_B = \frac{M_0L}{6EI},\ v|_{x=L/2} = \frac{-M_0L^2}{16EI}$$

***12–12.** Determine the equations of the elastic curve for the beam using the x_1 and x_2 coordinates. Specify the slope at A and the maximum displacement of the beam. EI is constant.

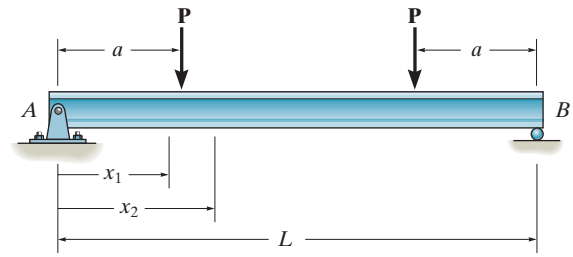

Referring to the FBDs of the beam's cut segments shown in Fig. *b* and *c*,

$$\circlearrowleft + \Sigma M_0 = 0; \qquad M(x_1) - Px_1 = 0 \qquad M(x_1) = Px_1$$

And

$$\circlearrowleft + \Sigma M_0 = 0; \qquad M(x_2) - Pa = 0 \qquad M(x_2) = Pa$$

$$EI\frac{d^2v}{dx^2} = M(x)$$

For coordinate x_1,

$$EI\frac{d^2v_1}{dx_1^2} = Px_1$$

$$EI\frac{dv_1}{dx_1} = \frac{P}{2}x_1{}^2 + C_1 \qquad (1)$$

$$EI\,v_1 = \frac{P}{6}x_1{}^3 + C_1x_1 + C_2 \qquad (2)$$

For coordinate x_2,

$$EI\frac{d^2v_2}{dx_2{}^2} = Pa$$

$$EI\frac{dv_2}{dx_2} = Pax_2 + C_3 \qquad (3)$$

$$EI\,v_2 = \frac{Pa}{2}x_2{}^2 + C_3x_2 + C_4 \qquad (4)$$

At $x_1 = 0, v_1 = 0$. Then, Eq. (2) gives

$$EI\,(0) = \frac{P}{6}(0^3) + C_1(0) + C_2 \qquad C_2 = 0$$

Due to symmetry, at $x_2 = \frac{L}{2}, \frac{dv_2}{dx_2} = 0$. Then, Eq. (3) gives

$$EI\,(0) = Pa\left(\frac{L}{2}\right) + C_3 \qquad C_3 = -\frac{PaL}{2}$$

At $x_1 = x_2 = a, \frac{dv_1}{dx_1} = \frac{dv_2}{dx_2}$. Thus, Eqs. (1) and (3) give

$$\frac{P}{2}a^2 + C_1 = Pa\,(a) + \left(-\frac{PaL}{2}\right)$$

$$C_1 = \frac{Pa^2}{2} - \frac{PaL}{2}$$

***12–12. Continued**

Also, at $x_1 = x_2 = a, v_1 = v_2$. Thus, Eq. (2) and (4) give

$$\frac{P}{6}a^3 + \left(\frac{Pa^2}{2} - \frac{PaL}{2}\right)a = \frac{Pa}{2}(a^2) + \left(-\frac{PaL}{2}\right)a + C_4$$

$$C_4 = \frac{Pa^3}{6}$$

Substituting the value of C_1 and C_2 into Eq. (2) and C_3 and C_4 into Eq.(4),

$$v_1 = \frac{P}{6EI}\left[x_1{}^3 + a(3a - 3L)x_1\right] \qquad \textbf{Ans.}$$

$$v_2 = \frac{Pa}{6EI}\left(3x_2{}^2 - 3Lx_2 + a^2\right) \qquad \textbf{Ans.}$$

Due to symmetry, $v_{\max}$ occurs at $x_2 = \frac{L}{2}$. Thus

$$v_{\max} = \frac{Pa}{24EI}\left(4a^2 - 3L^2\right) = \frac{Pa}{24EI}\left(3L^2 - 4a^2\right) \downarrow \qquad \textbf{Ans.}$$

Substitute the value C_1 into Eq (1),

$$\frac{dv_1}{dx_1} = \frac{P}{2EI}\left(x_1{}^2 + a^2 - aL\right)$$

At point A, $x_1 = 0$. Then

$$\theta_A = \left.\frac{dv_1}{dx_1}\right|_{x_1=0} = \frac{Pa}{2EI}(a - L) = \frac{Pa}{2EI}(L - a) \downarrow \qquad \textbf{Ans.}$$

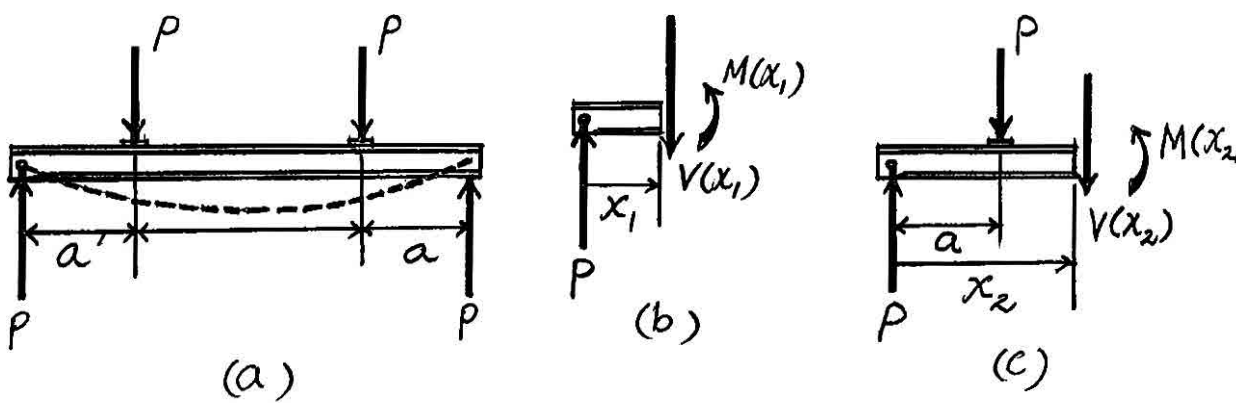

12–13. Determine the maximum deflection of the beam and the slope at A. EI is constant.

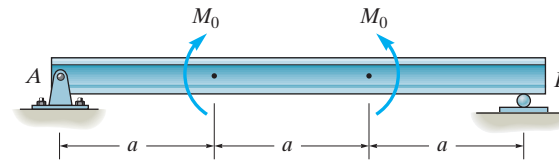

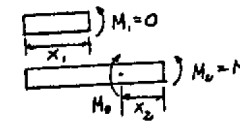

$M_1 = 0$

$$EI\frac{d^2v_1}{dx_1^2} = 0; \qquad EI\frac{dv_1}{dx_1} = C_1$$

$$EIv_1 = C_1x_1 + C_2$$

At $x_1 = 0, \quad v_1 = 0; \quad C_2 = 0$

$$M_2 = M_0; \qquad EI\frac{d^2v_1}{dx_2^2} = M_0$$

$$EI\frac{dv_2}{dx_2} = M_0x_2 + C_2$$

$$EI\,v_2 = \frac{1}{2}M_0x_2^2 + C_3x_2 + C_4$$

At $x_2 = \dfrac{a}{2}, \quad \dfrac{dv_2}{dx_2} = 0; \qquad C_1 = \dfrac{-M_0a}{2}$

At $x_1 = a, \quad x_2 = 0, \quad v_1 = v_2, \quad \dfrac{dv_1}{dx_1} = \dfrac{dv_2}{dx_2}$

$$C_1a = C_a$$

$$C_1 = \frac{-M_0a}{2}, \qquad C_a = \frac{-M_0a^2}{2}$$

At $x_1 = 0$,

$$EI\frac{dv_1}{dx_1} = -\frac{M_0a}{2}$$

$$\boldsymbol{\theta}_A = -\frac{M_0a}{2EI}$$ **Ans.**

At $x_2 = \dfrac{a}{2}$,

$$EI\,v_{\max} = \frac{1}{2}M_0\left(\frac{a^2}{4}\right) - \frac{M_0a}{2}\left(\frac{a}{2}\right) - \frac{M_0a^2}{2}$$

$$v_{\max} = -\frac{5M_0a^2}{8EI}$$ **Ans.**

Ans:
$\theta_A = -\dfrac{M_0a}{2EI}$, $v_{\max} = -\dfrac{5M_0a^2}{8EI}$

12–14. The simply supported shaft has a moment of inertia of $2I$ for region BC and a moment of inertia I for regions AB and CD. Determine the maximum deflection of the shaft due to the load **P**.

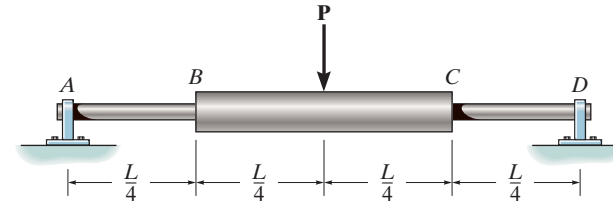

$$M_1(x) = \frac{P}{2}x_1$$

$$M_2(x) = \frac{P}{2}x_2$$

Elastic Curve and Slope:

$$EI\frac{d^2v}{dx^2} = M(x)$$

$$EI\frac{d^2v_1}{dx_1{}^2} = \frac{P}{2}x_1$$

$$EI\frac{dv_1}{dx_1} = \frac{Px_1^2}{4} + C_1 \qquad (1)$$

$$EIv_1 = \frac{Px_1^3}{12} + C_1x_1 + C_2 \qquad (2)$$

$$2EI\frac{d^2v_2}{dx_2{}^2} = \frac{P}{2}x_2$$

$$2EI\frac{dv_2}{dx_1} = \frac{Px_2^2}{4} + C_3 \qquad (3)$$

$$2EIv_2 = \frac{Px_2^3}{12} + C_3x_2 + C_4 \qquad (4)$$

Boundary Conditions:

$$v_1 = 0 \text{ at } x_1 = 0$$

From Eq. (2), $C_2 = 0$

$$\frac{dv_2}{dx_2} = 0 \text{ at } x_2 = \frac{L}{2}$$

From Eq. (3),

$$0 = \frac{PL^2}{16} + C_3$$

$$C_3 = -\frac{PL^2}{16}$$

Continuity Conditions:

$$\frac{dv_1}{dx_1} = \frac{dv_2}{dx_2} \text{ at } x_1 = x_2 = \frac{L}{4}$$

12–14. Continued

From Eqs. (1) and (3),

$$\frac{PL^2}{64} + C_1 = \frac{PL^2}{128} - \frac{1}{2}\left(\frac{PL^2}{16}\right)$$

$$C_1 = \frac{-5PL^2}{128}$$

$$v_1 = v_2 \text{ at } x_1 = x_2 = \frac{L}{4}$$

From Eqs. (2) and (4)

$$\frac{PL^3}{768} - \frac{5PL^2}{128}\left(\frac{L}{4}\right) = \frac{PL^3}{1536} - \frac{1}{2}\left(\frac{PL^2}{16}\right)\left(\frac{L}{4}\right) + \frac{1}{2}C_4$$

$$C_4 = \frac{-PL^3}{384}$$

$$v_2 = \frac{P}{768EI}\left(32x_2^3 - 24L^2 x_2 - L^3\right)$$

$$v_{\max} = v_2\Big|_{x_2=\frac{L}{2}} = \frac{-3PL^3}{256EI} = \frac{3PL^3}{256EI}\downarrow \qquad \textbf{Ans.}$$

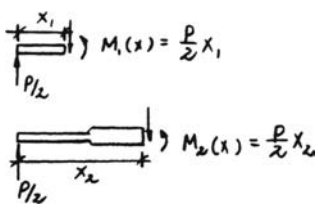

Ans:

$$v_{\max} = \frac{3PL^3}{256EI}\downarrow$$

12–15. The two wooden meter sticks are separated at their centers by a smooth rigid cylinder having a diameter of 50 mm. Determine the force F that must be applied at each end in order to just make their ends touch. Each stick has a width of 20 mm and a thickness of 5 mm. $E_w = 11$ GPa.

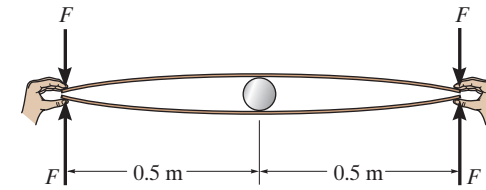

Slope at mid-span is zero, therefore we can model the problem as follows:

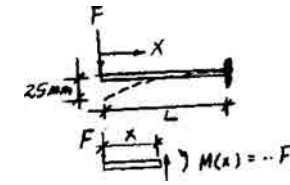

$$EI\frac{d^2v}{dx^2} = M(x)$$

$$EI\frac{d^2v}{dx^2} = -Fx$$

$$EI\frac{dv}{dx} = \frac{-Fx^2}{2} + C_1 \qquad (1)$$

$$EIv = \frac{-Fx^3}{6} + C_1x + C_2 \qquad (2)$$

Boundary Conditions:

$$\frac{dv}{dx} = 0 \quad \text{at} \quad x = L$$

From Eq. (1),

$$0 = \frac{-FL^2}{2} + C_1$$

$$C_1 = \frac{FL^2}{2}$$

$$v = 0 \quad \text{at} \quad x = L$$

From Eq. (2),

$$0 = \frac{-FL^3}{6} + \frac{FL^3}{2} + C_2$$

$$C_2 = -\frac{FL^3}{3}$$

$$v = \frac{F}{6EI}(-x^3 + 3L^2x - 2L^3)$$

Require:

$$v = -0.025 \text{ m} \quad \text{at} \quad x = 0$$

$$-0.025 = \frac{F}{6EI}(0 + 0 - 2L^3)$$

$$F = \frac{0.075EI}{L^3}$$

where,

$$I = \frac{1}{12}(0.02)(0.005^3) = 0.20833(10^{-9}) \text{ m}^4$$

$$F = \frac{0.075(11)(10^9)(0.20833)(10^{-9})}{(0.5^3)} = 1.375 \text{ N} \qquad \textbf{Ans.}$$

Ans:
$F = 1.375$ N

***12–16.** The pipe can be assumed roller supported at its ends and by a rigid saddle C at its center. The saddle rests on a cable that is connected to the supports. Determine the force that should be developed in the cable if the saddle keeps the pipe from sagging or deflecting at its center. The pipe and fluid within it have a combined weight of 125 lb/ft. EI is constant.

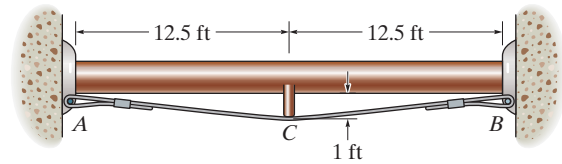

$$2P + F - 125(25) = 0$$

$$2P + F = 3125$$

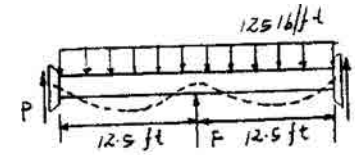

$$M = Px - \frac{125}{2}x^2$$

$$EI\frac{d^2v}{dx^2} = Px - \frac{125}{2}x^2$$

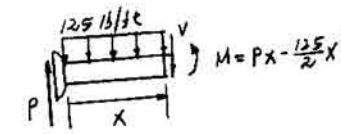

$$EI\frac{dv}{dx} = \frac{Px^2}{2} - 20.833x^3 + C_1$$

$$EIv = \frac{Px^3}{6} - 5.2083x^4 + C_1x + C_2$$

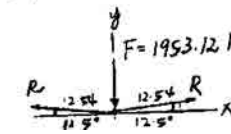

At $x = 0$, $v = 0$. Therefore $C_2 = 0$

At $x = 12.5$ ft, $v = 0$.

$$0 = \frac{P(12.5)^3}{6} - 5.2083(12.5)^4 + C_1(12.5) \qquad (1)$$

At $x = 12.5$ ft, $\frac{dv}{dx} = 0$.

$$0 = \frac{P(12.5)^2}{2} - 20.833(12.5)^3 + C_1 \qquad (2)$$

Solving Eqs. (1) and (2) for P,

$P = 585.94 \qquad F = 3125 - 2(585.94) = 1953.12$ lb

$+\uparrow \Sigma F_y = 0; \qquad 2R\left(\frac{1}{12.54}\right) - 1953.12 = 0$

$R = 12\,246$ lb $= 12.2$ kip **Ans.**

12–17. Determine the elastic curve in terms of the x_1 and x_2 coordinates. What is the deflection of end C of the shaft? EI is constant.

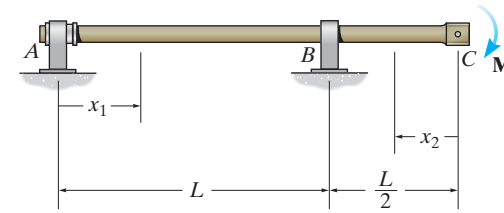

Support Reactions and Elastic Curve. As shown in Fig. *a*.

Moment Function. Referring to the free-body diagrams of the beam's cut segments, Fig. *b*, $M(x_1)$ is

$$\circlearrowleft + \Sigma M_O = 0; \qquad M(x_1) + \frac{M_O}{L}x_1 = 0 \qquad M(x_1) = -\frac{M_O}{L}x_1$$

and $M(x_2)$ is

$$\circlearrowleft + \Sigma M_O = 0; \qquad -M(x_2) - M_O = 0 \qquad M(x_2) = -M_O$$

Equations of Slope and Elastic Curve.

$$EI\frac{d^2v}{dx^2} = M(x)$$

For coordinate x_1,

$$EI\frac{d^2v_1}{dx_1^2} = -\frac{M_O}{L}x_1$$

$$EI\frac{dv_1}{dx_1} = -\frac{M_O}{2L}x_1^2 + C_1 \qquad (1)$$

$$EIv_1 = -\frac{M_O}{6L}x_1^3 + C_1x_1 + C_2 \qquad (2)$$

For coordinate x_2,

$$EI\frac{d^2v_2}{dx_2^2} = -M_O$$

$$EI\frac{dv_2}{dx_2} = -M_Ox_2 + C_3 \qquad (3)$$

$$EIv_2 = -\frac{M_O}{2}x_2^2 + C_3x_2 + C_4 \qquad (4)$$

Boundary Conditions. At $x_1 = 0$, $v_1 = 0$. Then, Eq. (2) gives

$$EI(0) = -\frac{M_O}{6L}(0^3) + C_1(0) + C_2 \qquad C_2 = 0$$

At $x_1 = L$, $v_1 = 0$. Then, Eq. (2) gives

$$EI(0) = -\frac{M_O}{6L}(L^3) + C_1(L) \qquad C_1 = \frac{M_OL}{6}$$

12–17. Continued

At $x_2 = \frac{L}{2}$, $v_2 = 0$. Then, Eq. (4) gives

$$EI(0) = -\frac{M_O}{2}\left(\frac{L}{2}\right)^2 + C_3\left(\frac{L}{2}\right) + C_4$$

$$0 = -\frac{M_O L^2}{8} + \frac{L}{2}C_3 + C_4 \qquad (5)$$

Continuity Conditions. At $x_1 = L$ and $x_2 = \frac{L}{2}$, $\frac{dv_1}{dx_1} = -\frac{dv_2}{dx_2}$. Thus, Eqs. (1) and (3) gives

$$-\frac{M_O}{2L}(L^2) + \frac{M_O L}{6} = -\left[-M_O\left(\frac{L}{2}\right) + C_3\right]$$

$$C_3 = \frac{5M_O L}{6}$$

Substituting the value of C_3 into Eq. (5),

$$0 = -\frac{M_O L^2}{8} + \frac{L}{2}\left(\frac{5M_O L}{6}\right) + C_4 \qquad C_4 = -\frac{7M_O L^2}{24}$$

Substituting the values of C_1 and C_2 into Eq. (2),

$$v_1 = \frac{M_O}{6EIL}(-x_1^3 + L^2 x_1) \qquad \textbf{Ans.}$$

Substituting the values of C_3 and C_4 into Eq. (4),

$$v_2 = \frac{M_O}{24EI}(-12x_2^2 + 20Lx_2 - 7L^2) \qquad \textbf{Ans.}$$

At point C, $x_2 = 0$. Then

$$v_C = v_2|_{x_2=0} = -\frac{7M_O L^2}{24EI} = \frac{7M_O L^2}{24EI}\downarrow \qquad \textbf{Ans.}$$

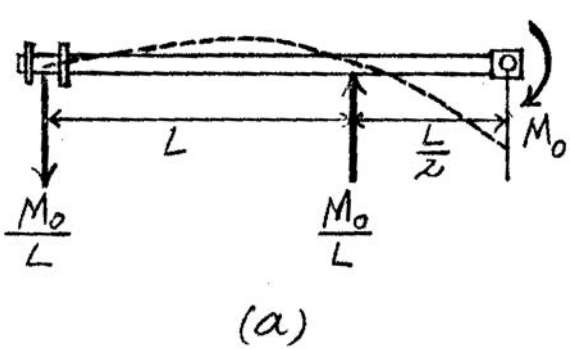

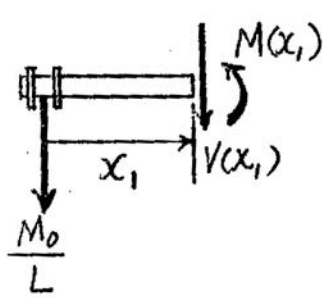

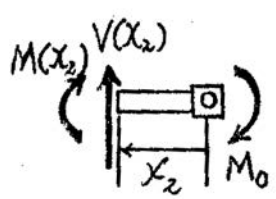

(b)

Ans:

$v_1 = \frac{M_0}{6EIL}(-x_1^3 + L^2 x_1)$,

$v_2 = \frac{M_0}{24EI}(-12x_2^2 + 20Lx_2 - 7L^2)$,

$v_C = \frac{7M_0 L^2}{24EI}\downarrow$

12–18. The bar is supported by a roller constraint at B, which allows vertical displacement but resists axial load and moment. If the bar is subjected to the loading shown, determine the slope at A and the deflection at C. EI is constant.

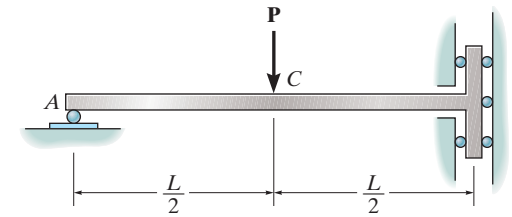

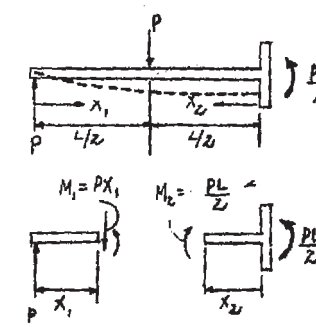

$$EI\frac{d^2v_1}{dx_1^2} = M_1 = Px_1$$

$$EI\,v_1 = \frac{Px_1^2}{6} + C_1$$

$$EI\,v_1 = \frac{Px_1^2}{6} + C_1x_1 + C_2$$

$$EI\frac{d^2v_2}{dx_2} = M_2 = \frac{PL}{2}$$

$$EI\frac{dv_2}{dx_2} = \frac{PL}{2}x_2 + C_3$$

$$EI\,v_2 = \frac{PL}{4}x_2^2 + C_3x_2 + C_4$$

Boundary Conditions:

At $x_1 = 0, v_1 = 0$

$0 = 0 + 0 + C_2; \quad C_2 = 0$

At $x_2 = 0, \quad \dfrac{dv_2}{dx_2} = 0$

$0 + C_3 = 0; \quad C_3 = 0$

At $x_1 = \dfrac{L}{2}, \quad x_2 = \dfrac{L}{2}, v_1 = v_2, \dfrac{dv_1}{dx_1} = -\dfrac{dv_2}{dx_2}$

$$\frac{P\left(\frac{1}{2}\right)^2}{6} + C_1\left(\frac{L}{2}\right) = \frac{PL\left(\frac{1}{2}\right)^2}{4} + C_4$$

$$\frac{P\left(\frac{1}{2}\right)^2}{2} + C_1 = -\frac{PL\left(\frac{1}{2}\right)}{2}; \quad C_1 = -\frac{3}{8}PL^2$$

$$C_4 = -\frac{11}{48}PL^3$$

At $x_1 = 0$

$$\frac{dv_1}{dx_1} = \theta_A = -\frac{3}{8}\frac{PL^2}{EI}$$ **Ans.**

At $x_1 = \dfrac{L}{2}$

$$v_C = \frac{P\left(\frac{1}{2}\right)^3}{6EI} - \left(\frac{3}{8EI}PL^3\right)\left(\frac{L}{2}\right) + 0$$

$$v_C = \frac{-PL^3}{6EI}$$ **Ans.**

Ans:

$$\theta_A = -\frac{3PL^2}{8EI}, v_C = \frac{-PL^3}{6EI}$$

12–19. Determine the deflection at B of the bar in Prob. 12–18.

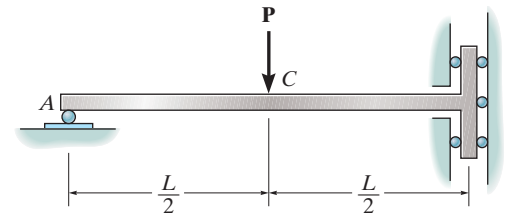

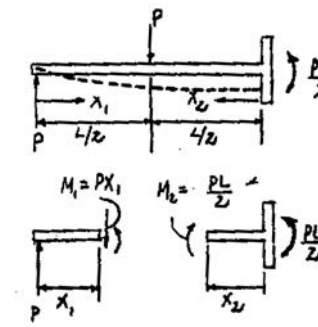

$$EI\frac{d^2v_1}{dx_1^2} = M_1 = Px_1$$

$$EI\frac{dv_1}{dx_1} = \frac{Px_1^2}{2} + C_1$$

$$EI\,v_1 = \frac{Px_1^2}{6} + C_1x_1 + C_2$$

$$EI\frac{d^2v_2}{dx_2} = M_2 = \frac{PL}{2}$$

$$EI\frac{dv_2}{dx_2} = \frac{PL}{2}x_2 + C_2$$

$$EI\,v_2 = \frac{PL}{4}x_2^2 + C_3x_2 + C_4$$

Boundary Conditions:

At $x_1 = 0, v_1 = 0$

$0 = 0 + 0 + C_2; \quad C_2 = 0$

At $x_2 = 0, \quad \dfrac{dv_2}{dx_2} = 0$

$0 + C_3 = 0; \quad C_3 = 0$

At $x_1 = \dfrac{L}{2}, \quad x_2 = \dfrac{L}{2}, v_1 = v_2, \dfrac{dv_1}{dx_1} = -\dfrac{dv_2}{dx_2}$

$$\frac{P\left(\frac{1}{2}\right)^2}{6} + C_1\left(\frac{L}{2}\right) = \frac{PL\left(\frac{1}{2}\right)^2}{4} + C_4$$

$$\frac{P\left(\frac{1}{2}\right)^2}{2} + C_1 = -\frac{PL\left(\frac{1}{2}\right)}{2}; \quad C_1 = -\frac{3}{8}PL^2$$

$$C_4 = -\frac{11}{48}PL^3$$

At $x_2 = 0$.

$$v_2 = -\frac{11PL^3}{48EI} \qquad \textbf{Ans.}$$

Ans:

$$v_0 = -\frac{11PL^3}{48EI}$$

***12–20.** Determine the equations of the elastic curve using the x_1 and x_2 coordinates, and specify the slope at A and the deflection at C. EI is constant.

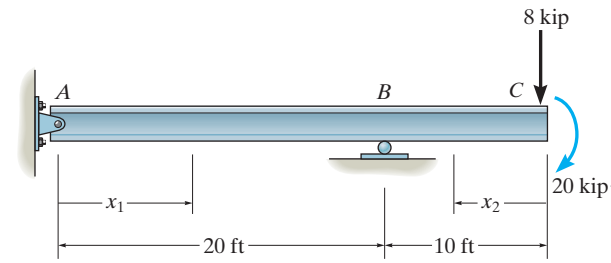

Referring to the FBDs of the beam's cut segments shown in Fig. *b*, and *c*,

$$\circlearrowleft + \Sigma M_o = 0; \qquad M(x_1) + 5x_1 = 0 \qquad M(x_1) = (-5x_1)\ \text{kip}\cdot\text{ft}$$

And

$$\circlearrowleft + \Sigma M_o = 0; \qquad -M(x_2) - 8x_2 - 20 = 0 \quad M(x_2) = (-8x_2 - 20)\ \text{kip}\cdot\text{ft}$$

$$EI\frac{d^2v}{dx^2} = M(x)$$

For coordinate x_1,

$$EI\frac{d^2v_1}{dx_1^2} = (-5x_1)\ \text{kip}\cdot\text{ft}$$

$$EI\frac{dv_1}{dx_1} = \left(-\frac{5}{2}x_1^2 + C_1\right)\text{kip}\cdot\text{ft}^2 \qquad (1)$$

$$EI\,v_1 = \left(-\frac{5}{6}x_1{}^3 + C_1x_1 + C_2\right)\text{kip}\cdot\text{ft}^3 \qquad (2)$$

For coordinate x_2,

$$EI\frac{d^2v_2}{dx_2{}^2} = (-8x_2 - 20)\ \text{kip}\cdot\text{ft}$$

$$EI\frac{dv_2}{dx_2} = \left(-4x_2{}^2 - 20x_2 + C_3\right)\text{kip}\cdot\text{ft}^2 \qquad (3)$$

$$EI\,v_2 = \left(-\frac{4}{3}x_2{}^3 - 10x_2{}^2 + C_3x_2 + C_4\right)\text{kip}\cdot\text{ft}^3 \qquad (4)$$

At $x_1 = 0, v_1 = 0$. Then, Eq (2) gives

$$EI(0) = -\frac{5}{6}\left(0^3\right) + C_1(0) + C_2 \qquad C_2 = 0$$

Also, at $x_1 = 20$ ft, $v_1 = 0$. Then, Eq (2) gives

$$EI(0) = -\frac{5}{6}\left(20^3\right) + C_1(20) + 0 \qquad C_1 = 333.33\ \text{kip}\cdot\text{ft}^2$$

Also, at $x_2 = 10$ ft, $v_2 = 0$. Then, Eq. (4) gives

$$EI(0) = -\frac{4}{3}\left(10^3\right) - 10\left(10^2\right) + C_3(10) + C_4$$

$$10C_3 + C_4 = 2333.33 \qquad (5)$$

***12–20. Continued**

At $x_1 = 20$ ft and $x_2 = 10$ ft, $\frac{dv_1}{dx_1} = -\frac{dv_2}{dx_2}$. Then Eq. (1) and (3) gives

$$-\frac{5}{2}\left(20^2\right) + 333.33 = -\left[-4\left(10^2\right) - 20(10) + C_3\right]$$

$$C_3 = 1266.67 \text{ kip} \cdot \text{ft}^2$$

Substitute the value of C_3 into Eq (5),

$$C_4 = -10333.33 \text{ kip} \cdot \text{ft}^3$$

Substitute the value of C_1 into Eq. (1),

$$\frac{dv_1}{dx_1} = \frac{1}{EI}\left(-\frac{5}{2}x_1{}^2 + 333.33\right) \text{kip} \cdot \text{ft}^2$$

At A, $x_1 = 0$. Thus,

$$\theta_A = \left.\frac{dv_1}{dx_1}\right|_{x_1=0} = \frac{333 \text{ kip} \cdot \text{ft}^2}{EI} \qquad \textbf{Ans.}$$

Substitute the values of C_1 and C_2 into Eq. (2) and C_3 and C_4 into Eq (4),

$$v_1 = \frac{1}{EI}\left(-\frac{5}{6}x_1{}^3 + 333\,x_1\right) \text{kip} \cdot \text{ft}^3 \qquad \textbf{Ans.}$$

$$v_2 = \frac{1}{EI}\left(-\frac{4}{3}x_2{}^3 - 10x_2{}^2 + 1267x_2 - 10333\right) \text{kip} \cdot \text{ft}^3 \qquad \textbf{Ans.}$$

At C, $x_2 = 0$. Thus

$$v_C = v_2\big|_{x_2=0} = -\frac{10\,333 \text{ kip} \cdot \text{ft}^3}{EI} = \frac{10\,333 \text{ kip} \cdot \text{ft}^3}{EI} \downarrow \qquad \textbf{Ans.}$$

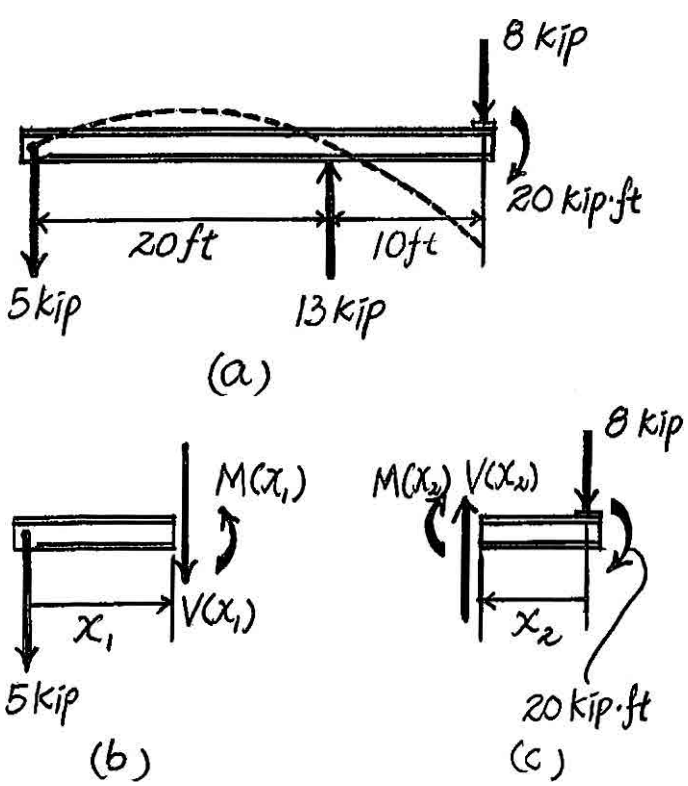

12–21. Determine the maximum deflection of the solid circular shaft. The shaft is made of steel having $E = 200$ GPa. It has a diameter of 100 mm.

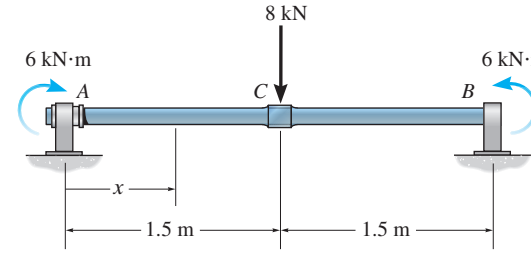

Support Reactions and Elastic Curve. As shown in Fig. *a*.

Moment Function. Referring to the free-body diagram of the beam's cut segment, Fig. *b*,

$$\circlearrowleft + \Sigma M_O = 0; \qquad M(x) - 4x - 6 = 0 \qquad M(x) = (4x + 6)\ \text{kN}\cdot\text{m}$$

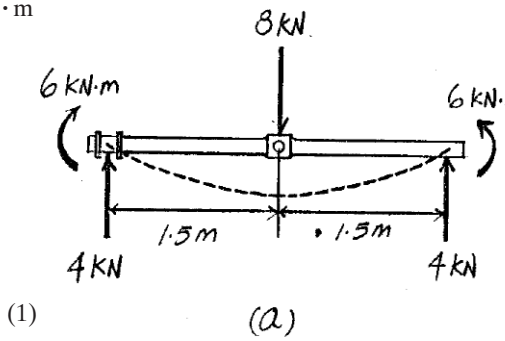

Equations of Slope and Elastic Curve.

$$EI\frac{d^2v}{dx^2} = M(x)$$

$$EI\frac{d^2v}{dx^2} = 4x + 6$$

$$EI\frac{dv}{dx} = 2x^2 + 6x + C_1 \qquad (1)$$

$$EIv = \frac{2}{3}x^3 + 3x^2 + C_1x + C_2 \qquad (2)$$

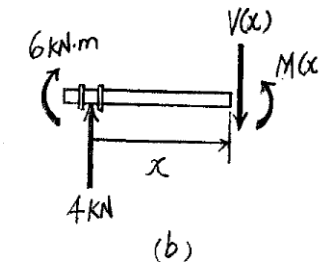

Boundary Conditions. Due to symmetry, $\frac{dv}{dx} = 0$ at $x = 1.5$ m. Then Eq. (1) gives

$$EI(0) = 2(1.5^2) + 6(1.5) + C_1 \qquad C_1 = -13.5\ \text{kN}\cdot\text{m}^2$$

Also, at $x = 0$, $v = 0$. Then Eq. (2) gives

$$EI(0) = \frac{2}{3}(0^3) + 3(0^2) + C_1(0) + C_2 \qquad C_2 = 0$$

Substituting the values of C_1 and C_2 into Eq. (2),

$$v = \frac{1}{EI}\left(\frac{2}{3}x^3 + 3x^2 - 13.5x\right)$$

v_{max} occurs at $x = 1.5$ m, where $\frac{dv}{dx} = 0$. Thus,

$$v_{max} = v|_{x=1.5\text{ m}} = \frac{1}{EI}\left[\frac{2}{3}(1.5^3) + 3(1.5^2) - 13.5(1.5)\right]$$

$$= -\frac{11.25\ \text{kN}\cdot\text{m}^3}{EI}$$

$$= -\frac{11.25(10^3)}{200(10^9)\left[\frac{\pi}{4}(0.05^4)\right]}$$

$$= -0.01146\ \text{m} = 11.5\ \text{mm}\downarrow \qquad \textbf{Ans.}$$

Ans:
$v_{max} = 11.5$ mm↓

12–22. Determine the elastic curve for the cantilevered W14 × 30 beam using the x coordinate. Specify the maximum slope and maximum deflection. $E = 29(10^3)$ ksi.

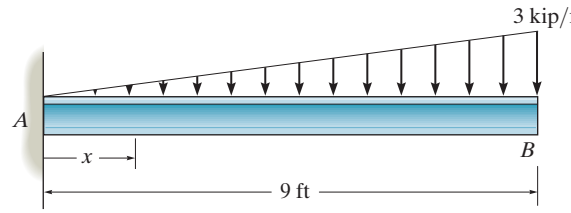

Referring to the FBD of the beam's cut segment shown in Fig. *b*,

$$\circlearrowleft + \Sigma M_o = 0; \quad M(x) + 81 + \tfrac{1}{2}\left(\tfrac{1}{3}x\right)(x)\left(\tfrac{x}{3}\right) - 13.5x = 0$$

$$M(x) = \left(13.5x - 0.05556x^3 - 81\right) \text{ kip}\cdot\text{ft}.$$

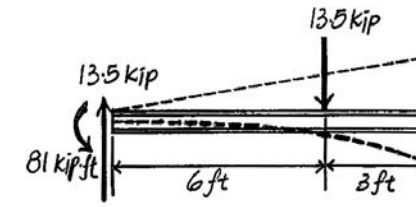

(a)

$$EI\frac{d^2v}{dx^2} = M(x)$$

$$EI\frac{d^2v}{dx^2} = \left(13.5x - 0.05556x^3 - 81\right) \text{ kip}\cdot\text{ft}$$

$$EI\frac{dv}{dx} = \left(6.75x^2 - 0.01389x^4 - 81x + C_1\right) \text{ kip}\cdot\text{ft}^2 \qquad (1)$$

$$EI\,v = \left(2.25x^3 - 0.002778x^5 - 40.5x^2 + C_1x + C_2\right) \text{ kip}\cdot\text{ft}^3 \quad (2)$$

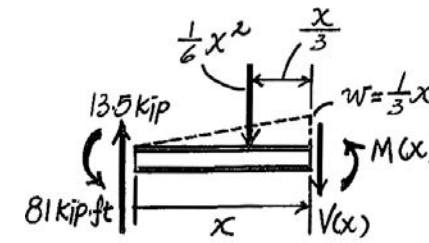

(b)

At $x = 0, \dfrac{dv}{dx} = 0$. Then, Eq (1) gives

$$EI(0) = 6.75\left(0^2\right) - 0.01389\left(0^4\right) - 81(0) + C_1 \qquad C_1 = 0$$

Also, at $x = 0, v = 0$. Then Eq. (2) gives

$$EI(0) = 2.25\left(0^3\right) - 0.002778\left(0^5\right) - 40.5\left(0^2\right) + 0 + C_2 \qquad C_2 = 0$$

Substitute the value of C_1 into Eq (1) gives.

$$\frac{dv}{dx} = \frac{1}{EI}\left(6.75x^2 - 0.01389x^4 - 81x\right) \text{ kip}\cdot\text{ft}^2$$

The Maximum Slope occurs at $x = 9$ ft. Thus,

$$\theta_{\max} = \left.\frac{dv}{dx}\right|_{x=9\text{ft}} = -\frac{273.375 \text{ kip}\cdot\text{ft}^2}{EI}$$

For $W14 \times 30$, $I = 291$ in^4. Thus

$$\theta_{\max} = -\frac{273.375(12^2)}{(29 \times 10^3)(291)} = 0.00466 \text{ rad} \circlearrowright \qquad \textbf{Ans.}$$

Substitute the values of C_1 and C_2 into Eq (2),

$$v = \frac{1}{EI}\left(2.25x^3 - 0.002778x^5 - 40.5x^2\right) \text{ kip}\cdot\text{ft}^3 \qquad \textbf{Ans.}$$

The maximum deflection occurs at $x = 9$ ft, Thus,

$$v_{\max} = v\big|_{x=9\text{ ft}} = -\frac{1804.275 \text{ kip}\cdot\text{ft}^3}{EI}$$

$$= \frac{1804.275 \text{ kip}\cdot\text{ft}^3}{EI} \downarrow$$

$$= \frac{1804.275\left(12^3\right)}{29.0\left(10^3\right)(291)}$$

$$= 0.369 \text{ in} \downarrow \qquad \textbf{Ans.}$$

Ans:
$v = \dfrac{1}{EI}(2.25\,x^3 - 0.002778\,x^5 - 40.5\,x^2)$ kip·ft^3,
$\theta = 0.00466$ rad (clockwise), $v_{\max} = 0.369$ in.

12–23. Determine the equations of the elastic curve using the coordinates x_1 and x_2, and specify the deflection and slope at C. EI is constant.

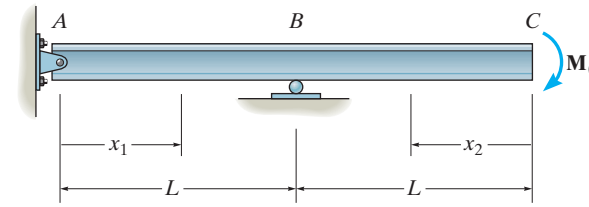

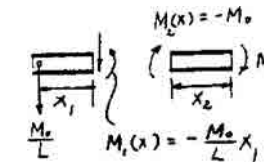

$$EI\frac{d^2v}{dx^2} = M(x)$$

For $M_1(x_1) = -\dfrac{M_0}{L}x_1$

$$EI\frac{d^2v_1}{dx_1^2} = -\frac{M_0}{L}x_1$$

$$EI\frac{dv_1}{dx_1} = -\frac{M_0}{2L}x_1^2 + C_1 \qquad (1)$$

$$EIv_1 = -\frac{M_0}{6L}x_1^3 + C_1x_1 + C_2 \qquad (2)$$

For $M_2(x) = -M_0$; $\qquad EI\dfrac{d^2v_2}{dx_2^2} = -M_0$

$$EI\frac{dv_2}{dx_2} = -M_0x_2 + C_3 \qquad (3)$$

$$EIv_2 = -\frac{M_0}{2}x_2^2 + C_3x_2 + C_4 \qquad (4)$$

Boundary Conditions:

At $x_1 = 0, v_1 = 0$

From Eq. (2),

$0 = 0 + 0 + C_2;\ C_2 = 0$

At $x_1 = x_2 = L, v_1 = v_2 = 0$

From Eq. (2),

$$0 = -\frac{M_0L^2}{6} + C_1L; \qquad C_1 = \frac{M_0L}{6}$$

From Eq. (4),

$$0 = -\frac{M_0L^2}{2} + C_3L + C_4 \qquad (5)$$

12–23. Continued

Continuity Condition:

At $x_1 = x_2 = L, \dfrac{dv_1}{dx_1} = -\dfrac{dv_2}{dx_2}$

From Eqs. (1) and (3),

$$-\frac{M_0L}{2} + \frac{M_0L}{6} = -(-M_0L + C_3); \qquad C_3 = \frac{4M_0L}{3}$$

Substituting C_3 into Eq. (5) yields,

$$C_4 = -\frac{5M_0L^2}{6}$$

The slope:

$$\frac{dv_2}{dx_2} = \frac{1}{EI}\left[-M_0x_2 + \frac{4M_0L}{3}\right]$$

$$\theta_C = \left.\frac{dv_2}{dx_2}\right|_{x_2=0} = \frac{4M_0L}{3EI} \circlearrowright \qquad \textbf{Ans.}$$

The elastic Curve:

$$v_1 = \frac{M_0}{6EIL}[-x_1^3 + L^2x_1] \qquad \textbf{Ans.}$$

$$v_2 = \frac{M_0}{6EIL}[-3Lx_2^2 + 8L^2x_2 - 5L^3] \qquad \textbf{Ans.}$$

$$v_C = v_2\big|_{x_2=0} = -\frac{5M_0L^2}{6EI} \qquad \textbf{Ans.}$$

The negative sign indicates downward deflection.

Ans:

$\theta_C = -\dfrac{4M_0L}{3EI}$, $v_1 = \dfrac{M_0}{6EIL}[-x_1^3 + L^2x_1]$,

$v_2 = \dfrac{M_0}{6EIL}[-3Lx_2^2 + 8L^2x_2 - 5L^3]$,

$v_C = -\dfrac{5M_0L^2}{6EI}$

***12–24.** Determine the equations of the elastic curve using the coordinates x_1 and x_2, and specify the slope at A. EI is constant.

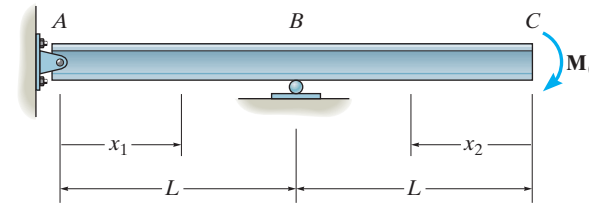

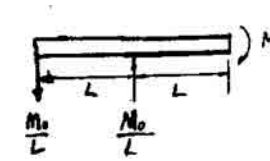

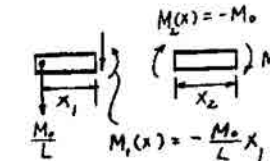

$$EI\frac{d^2v}{dx^2} = M(x)$$

For $M_1(x_1) = -\dfrac{M_0}{L}x_1$

$$EI\frac{d^2v_1}{dx_1^2} = -\frac{M_0}{L}x_1$$

$$EI\frac{dv_1}{dx_1} = -\frac{M_0}{2L}x_1^2 + C_1 \qquad (1)$$

$$EIv_1 = -\frac{M_0}{6L}x_1^3 + C_1x_1 + C_2 \qquad (2)$$

For $M_2(x) = -M_0$; $\qquad EI\dfrac{d^2v_2}{dx_2^2} = -M_0$

$$EI\frac{dv_2}{dx_2} = -M_0x_2 + C_3 \qquad (3)$$

$$EIv_2 = -\frac{M_0}{2}x_2^2 + C_3x_2 + C_4 \qquad (4)$$

Boundary Conditions:

At $x_1 = 0, v_1 = 0$

From Eq. (2),

$0 = 0 + 0 + C_2; \quad C_2 = 0$

At $x_1 = x_2 = L, v_1 = v_2 = 0$

From Eq. (2),

$$0 = -\frac{M_0L^2}{6} + C_1L; \quad C_1 = \frac{M_0L}{6}$$

From Eq. (4),

$$0 = -\frac{M_0L^2}{2} + C_3L + C_4 \qquad (5)$$

Continuity Condition:

At $x_1 = x_2 = L$, $\qquad \dfrac{dv_1}{dx_1} = -\dfrac{dv_2}{dx_2}$

12–24. Continued

From Eqs. (1) and (3),

$$-\frac{M_0L}{2} + \frac{M_0L}{6} = -(-M_0L + C_3); \qquad C_3 = \frac{4M_0L}{3}$$

Substiuting C_3 into Eq. (5) yields,

$$C_4 = -\frac{5M_0L^2}{6}$$

The Elastic Curve:

$$v_1 = \frac{M_0}{6EIL}[-x_1^3 + L^2x_1]$$ **Ans.**

$$v_2 = \frac{M_0}{6EIL}[-3Lx_2^2 + 8L^2x_2 - 5L^3]$$ **Ans.**

From Eq. (1),

$$EI\frac{dv_1}{dx_1} = 0 + C_1 = \frac{M_0L}{6}$$

$$\theta_A = \left.\frac{dv_1}{dx_1}\right|_{x_1=0} = \frac{M_0L}{6EI}$$ **Ans.**

12–25. The floor beam of the airplane is subjected to the loading shown. Assuming that the fuselage exerts only vertical reactions on the ends of the beam, determine the maximum deflection of the beam. *EI* is constant.

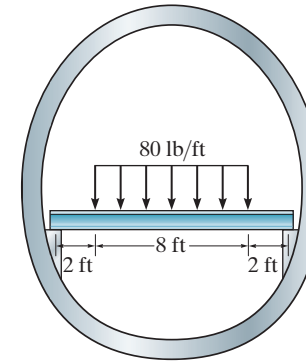

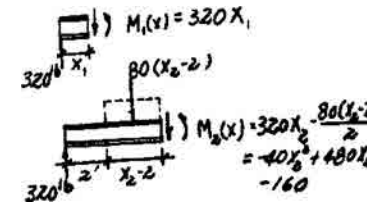

Elastic Curve and Slope:

$$EI\frac{d^2v}{dx^2} = M(x)$$

For $M_1(x) = 320x_1$

$$EI\frac{d^2v_1}{dx_1^2} = 320x_1$$

$$EI\frac{dv_1}{dx_1} = 160x_1^2 + C_1 \qquad (1)$$

$$EIv_1 = 53.33x_1^3 + C_1x_1 + C_2 \qquad (2)$$

For $M_2(x) = -40x_2^2 + 480x_2 - 160$

$$EI\frac{d^2v_2}{dx_2^3} = -40x_2^2 + 480x_2 - 160$$

$$EI\frac{dv_2}{dx_2} = -13.33x_2^3 + 240x_2^2 - 160x_2 + C_1 \qquad (3)$$

$$EIv_2 = -3.33x_2^4 + 80x_2^3 - 80x_2^2 + C_3x_2 + C_4 \qquad (4)$$

Boundary Conditions:

$v_1 = 0$ at $x_1 = 0$

From Eq. (2), $C_2 = 0$

Due to symmetry,

$$\frac{dv_2}{dx_2} = 0 \quad \text{at} \quad x_2 = 6\text{ ft}$$

From Eq. (3),

$$-2880 + 8640 - 960 + C_3 = 0$$

$$C_3 = -4800$$

12–25. Continued

Continuity Conditions:

$$\frac{dv_1}{dx_1} = \frac{dv_2}{dx_2} \quad \text{at} \quad x_1 = x_2 = 2\text{ ft}$$

From Eqs. (1) and (3),

$$640 + C_1 = -106.67 + 960 - 320 - 4800$$

$$C_1 = -4906.67$$

$$v_1 = v_2 \quad \text{at} \quad x_1 = x_2 = 2\text{ ft}$$

From Eqs. (2) and (4),

$$426.67 - 9813.33 = -53.33 + 640 - 320 - 9600 + C_4$$

$$C_4 = -53.33$$

$$v_2 = \frac{1}{EI}(-3.33x_2^4 + 80x_2^3 - 80x_2^2 - 4800x_2 - 53.33)$$

$v_{\max}$ occurs at $x_2 = 6$ft.

$$v_{\max} = v_2|_{x_2=6} = \frac{-18.8\text{ kip}\cdot\text{ft}^3}{EI} \qquad \textbf{Ans.}$$

The negative sign indicates downward displacement.

Ans:

$$v_{\max} = \frac{-18.8\text{ kip}\cdot\text{ft}^3}{EI}$$

12–26. Determine the maximum deflection of the rectangular simply supported beam. The beam is made of wood having a modulus of elasticity of $E = 1.5(10^3)$ ksi.

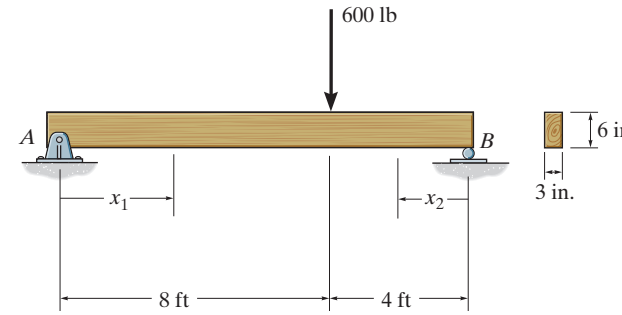

Support Reactions and Elastic Curve. As shown in Fig. *a*.

Moment Function. Referring to the free-body diagrams of the beam's cut segments, Fig. *b*, $M(x_1)$ is

$$\circlearrowleft + \Sigma M_O = 0; \qquad M(x_1) - 200(x_1) = 0 \qquad M(x_1) = 200x_1 \text{ lb} \cdot \text{ft}$$

and $M(x_2)$ is

$$\circlearrowleft + \Sigma M_O = 0; \qquad 400(x_2) - M(x_2) = 0 \qquad M(x_2) = 400x_2 \text{ lb} \cdot \text{ft}$$

Equations of Slope and Elastic Curve.

$$EI\frac{d^2v}{dx^2} = M(x)$$

For coordinate x_1,

$$EI\frac{d^2v_1}{dx_1^2} = 200x_1$$

$$EI\frac{dv_1}{dx_1} = 100x_1^2 + C_1 \qquad (1)$$

$$EIv_1 = \frac{100}{3}x_1^3 + C_1x_1 + C_2 \qquad (2)$$

For coordinate x_2,

$$EI\frac{d^2v_2}{dx_2^2} = 400x_2$$

$$EI\frac{dv_2}{dx_2} = 200x_2^2 + C_3 \qquad (3)$$

$$EIv_2 = \frac{200}{3}x_2^3 + C_3x_2 + C_4 \qquad (4)$$

Boundary Conditions. At $x_1 = 0$, $v_1 = 0$. Then, Eq. (2) gives

$$EI(0) = \frac{100}{3}(0^3) + C_1(0) + C_2 \qquad C_2 = 0$$

Also, at $x_2 = 0$, $v_2 = 0$. Then, Eq. (4) gives

$$EI(0) = \frac{200}{3}(0^3) + C_3(0) + C_4 \qquad C_4 = 0$$

12–26. Continued

Continuity Conditions. At $x_1 = 8$ ft and $x_2 = 4$ ft, $\frac{dv_1}{dx_1} = -\frac{dv_2}{dx_2}$. Thus, Eqs. (1) and (3) give

$$100(8^2) + C_1 = -\left[200(4^2) + C_3\right]$$

$$C_1 + C_3 = -9600 \qquad (5)$$

At $x_1 = 8$ ft and $x_2 = 4$ ft, $v_1 = v_2$. Then Eqs. (2) and (4) gives

$$\frac{100}{3}(8^3) + C_1(8) = \frac{200}{3}(4^3) + C_3(4)$$

$$4C_3 - 8C_1 = 12800 \qquad (6)$$

Solving Eqs. (5) and (6),

$$C_1 = -4266.67 \text{ lb}\cdot\text{ft}^2 \qquad C_3 = -5333.33 \text{ lb}\cdot\text{ft}^2$$

Substituting the result of C_1 into Eq. (1),

$$\frac{dv_1}{dx_1} = \frac{1}{EI}(100x_1^2 - 4266.67)$$

$$\frac{dv_1}{dx_1} = 0 = \frac{1}{EI}(100x_1^2 - 4266.67) \qquad x_1 = 6.5320 \text{ ft}$$

Substituting the result of C_1 and C_2 into Eq. (2),

$$v_1 = \frac{1}{EI}\left(\frac{100}{3}x_1^3 - 4266.67x_1\right)$$

v_{max} occurs at $x_1 = 6.5320$ ft, where $\frac{dv_1}{dx_1} = 0$. Thus,

$$v_{max} = v_1\big|_{x_1=6.5320\text{ ft}} = -\frac{18579.83 \text{ lb}\cdot\text{ft}^3}{EI}$$

$$= -\frac{18579.83(1728)}{1.5(10^6)\left[\frac{1}{12}(3)(6^3)\right]}$$

$$= -0.396 \text{ in} = 0.396 \text{ in} \downarrow \qquad \textbf{Ans.}$$

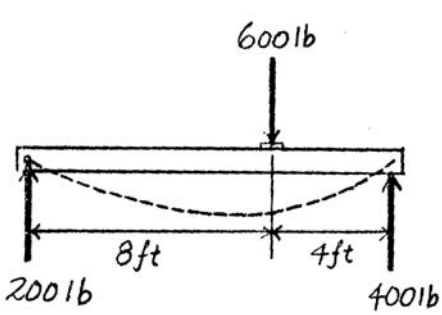

(a)

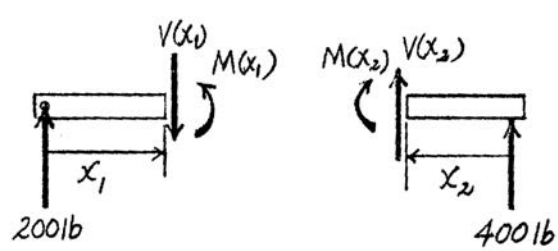

(b)

Ans:
$v_{max} = 0.396$ in.$\downarrow$

12–27. Determine the elastic curve and the maximum deflection of the cantilever beam.

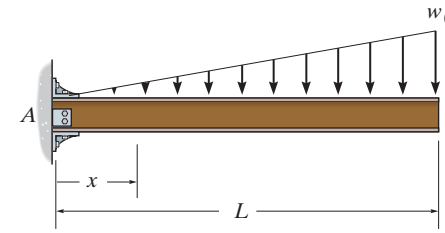

Support Reactions and Elastic Curve. As shown in Fig. *a*.

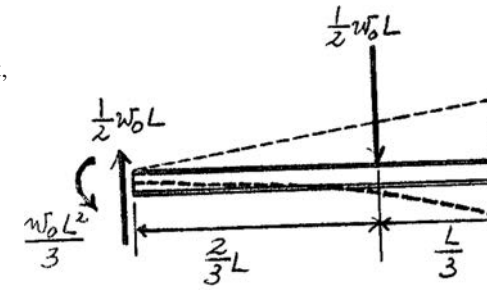

(a)

Moment Function. Referring to the free-body diagram of the beam's cut segment, Fig. *b*,

$$\circlearrowleft + \Sigma M_O = 0; \qquad M(x) + \left[\frac{1}{2}\left(\frac{w_0}{L}x\right)(x)\right]\left(\frac{x}{3}\right) + \frac{w_0L^2}{3} - \frac{1}{2}w_0L(x) = 0$$

$$M(x) = \frac{w_0}{6L}(3L^2x - x^3 - 2L^3)$$

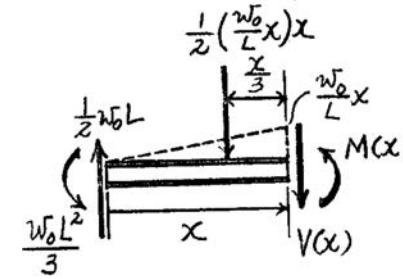

(b)

Equations of Slope and Elastic Curve.

$$EI\frac{d^2v}{dx^2} = M(x)$$

$$EI\frac{d^2v}{dx^2} = \frac{w_0}{6L}(3L^2x - x^3 - 2L^3)$$

$$EI = \frac{dv}{dx} = \frac{w_0}{6L}\left(\frac{3}{2}L^2x^2 - \frac{x^4}{4} - 2L^3x + C_1\right) \qquad (1)$$

$$EIv = \frac{w_0}{6L}\left(\frac{1}{2}L^2x^3 - \frac{x^5}{20} - L^3x^2 + C_1x + C_2\right) \qquad (2)$$

Boundary Conditions. At $x = 0$, $\frac{dv}{dx} = 0$. Then Eq. (1) gives

$$EI(0) = \frac{w_0}{6L}\left(\frac{3}{2}L^2(0^2) - \frac{0^4}{4} - 2L^3(0) + C_1\right) \qquad C_1 = 0$$

At $x = 0$, $v = 0$. Then Eq. (2) gives

$$EI(0) = \frac{w_0}{6L}\left(\frac{1}{2}L^2(0^3) - \frac{0^5}{20} - L^3(0^2) + 0 + C_2\right) \qquad C_2 = 0$$

Substituting the values of C_1 and C_2 into Eq. (2),

$$v = \frac{w_0x^2}{120EIL}(10L^2x - x^3 - 20L^3) \qquad \textbf{Ans.}$$

v_{max} occurs at $x = L$. Thus,

$$v_{max} = v|_{x=L} = \frac{w_0x^2}{120EIL}\left[10L^2(L) - L^3 - 20L^3\right]$$

$$= -\frac{11w_0L^4}{120EI} = \frac{11w_0L^4}{120EI}\downarrow \qquad \textbf{Ans.}$$

Ans:
$v = \frac{w_0x^2}{120EIL}(10L^2x - x^3 - 20L^3)$,
$v_{max} = \frac{11w_0L^4}{120EI}\downarrow$

***12–28.** Determine the slope at end B and the maximum deflection of the cantilever triangular plate of constant thickness t. The plate is made of material having a modulus of elasticity of E.

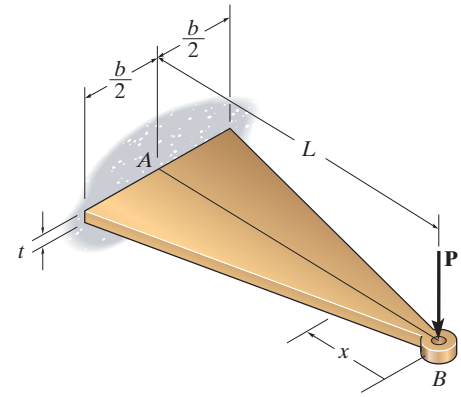

Section Properties: Referring to the geometry shown in Fig. a,

$$\frac{b(x)}{x} = \frac{b}{L}; \qquad b(x) = \frac{b}{L}x$$

Thus, the moment of the plate as a function of x is

$$I(x) = \frac{1}{12}[b(x)]t^3 = \frac{bt^3}{12L}x$$

Moment Functions. Referring to the free–body diagram of the plate's cut segment, Fig. b,

$$\circlearrowleft + \Sigma M_O = 0; \qquad -M(x) - Px = 0 \qquad M(x) = -Px$$

Equations of Slope and Elastic Curve.

$$E\frac{d^2v}{dx^2} = \frac{M(x)}{I(x)}$$

$$E\frac{d^2v}{dx^2} = \frac{-Px}{\frac{bt^3}{12L}x} = -\frac{12PL}{bt^3}$$

$$E\frac{dv}{dx} = -\frac{12PL}{bt^3}x + C_1 \qquad (1)$$

$$Ev = -\frac{6PL}{bt^3}x^2 + C_1x + C_2 \qquad (2)$$

Boundary Conditions. At $x = L$, $\frac{dv}{dx} = 0$. Then Eq. (1) gives

$$E(0) = -\frac{12PL}{bt^3}(L) + C_1 \qquad C_1 = \frac{12PL^2}{bt^3}$$

At $x = L$, $v = 0$. Then Eq. (2) gives

$$E(0) = -\frac{6PL}{bt^3}(L^2) + C_1(L) + C_2 \qquad C_2 = -\frac{6PL^3}{bt^3}$$

Substituting the value of C_1 into Eq. (1),

$$\frac{dv}{dx} = \frac{12PL}{bt^3E}(-x + L)$$

At B, $x = 0$. Thus,

$$\theta_B = \left.\frac{dv}{dx}\right|_{x=0} = \frac{12PL^2}{bt^3E} \qquad \textbf{Ans.}$$

12–28. Continued

Substituting the values of C_1 and C_2 into Eq. (2),

$$v = \frac{6PL}{Ebt^3}(-x^2 + 12Lx - L^2)$$

v_{max} occurs at $x = 0$. Thus,

$$v_{max} = v|_{x=0} = -\frac{6PL^3}{Ebt^3} = \frac{6PL^3}{Ebt^3} \downarrow$$ **Ans.**

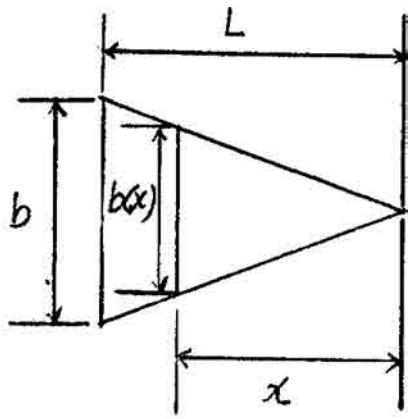

(a)

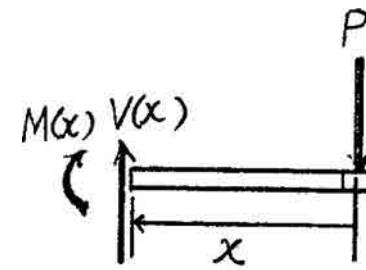

(b)

12–29. Determine the equation of the elastic curve using the coordinates x_1 and x_2, and specify the slope and deflection at B. EI is constant.

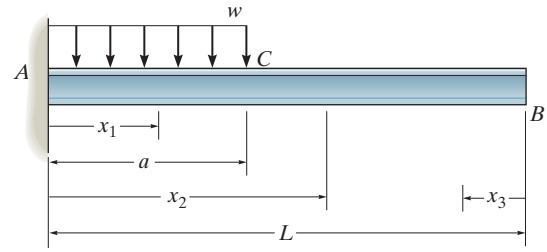

$$EI\frac{d^2v}{dx^2} = M(x)$$

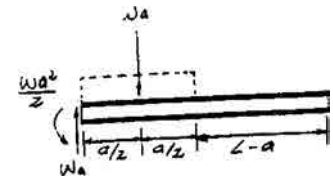

For $M_1(x) = -\frac{w}{2}x_1^2 + wax_1 - \frac{wa^2}{2}$

$$EI\frac{d^2v_1}{dx_1^2} = -\frac{w}{2}x_1^2 + wax_1 - \frac{wa^2}{2}$$

$$EI\frac{dv_1}{dx_1} = -\frac{w}{6}x_1^3 + \frac{wa}{2}x_1^2 - \frac{wa^2}{2}x_1 + C_1 \qquad (1)$$

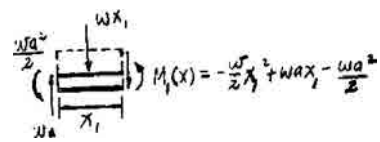

$$EI\,v_1 = -\frac{w}{24}x_1^4 + \frac{wa}{6}x_1^3 - \frac{wa^2}{4}x_1^2 + C_1x_1 + C_2 \qquad (2)$$

For $M_2(x) = 0$; $\quad EI\frac{d^2v_2}{dx_2^2} = 0$

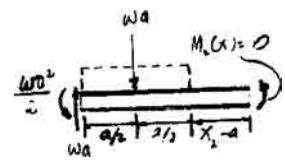

$$EI\frac{dv_2}{dx_2} = C_3 \qquad (3)$$

$$EI\,v_2 = C_3x_2 + C_4 \qquad (4)$$

Boundary Conditions:

At $x_1 = 0$, $\quad \frac{dv_1}{dx_1} = 0$

From Eq. (1), $\quad C_1 = 0$

At $x_1 = 0$, $v_1 = 0$

From Eq. (2); $\quad C_2 = 0$

Continuity Conditions:

At $x_1 = a$, $\quad x_2 = a$; $\quad \frac{dv_1}{dx_1} = \frac{dv_2}{dx_2}$

From Eqs. (1) and (3),

$$-\frac{wa^3}{6} + \frac{wa^3}{2} - \frac{wa^3}{2} = C_3; \qquad C_3 = -\frac{wa^3}{6}$$

From Eqs. (2) and (4),

At $x_1 = a$, $\quad x_2 = a \quad v_1 = v_2$

$$-\frac{wa^4}{24} + \frac{wa^4}{6} - \frac{wa^4}{4} = -\frac{wa^4}{6} + C_4; \qquad C_4 = \frac{wa^4}{24}$$

12–29. Continued

The slope, from Eq. (3),

$$\theta_B = \frac{dv_1}{dx_2} = -\frac{wa^3}{6EI}$$ **Ans.**

The Elastic Curve:

$$v_1 = \frac{w}{24EI}[-x_1^4 + 4ax_1^3 - 6a^2x_1^2]$$ **Ans.**

$$v_1 = \frac{wa^3}{24EI}[-4x_2 + a]$$ **Ans.**

$$v_B = v_2\Big|_{x_2=L} = \frac{wa^3}{24EI}(-4L + a)$$ **Ans.**

Ans:

$\theta_B = -\frac{wa^3}{6EI}$, $v_1 = \frac{w}{24EI}[-x_1^4 + 4ax_1^3 - 6a^2x_1^2]$,

$v_2 = \frac{wa^3}{24EI}[-4x_2 + a]$,

$v_B = \frac{wa^3}{24EI}(-4L + a)$

12–30. Determine the equations of the elastic curve using the coordinates x_1 and x_3, and specify the slope and deflection at point B. EI is constant.

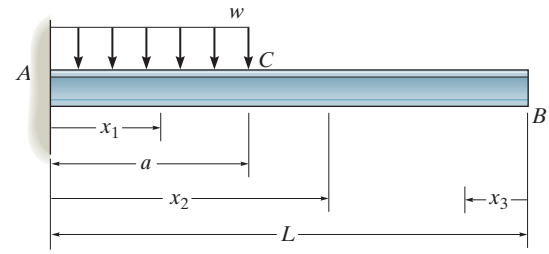

$$EI\frac{d^2v}{dx^2} = M(x)$$

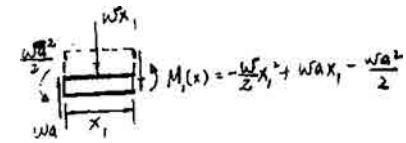

For $M_1(x) = -\frac{w}{2}x_1^2 + wax_1 - \frac{wa^2}{2}$

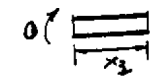

$$EI\frac{d^2v_1}{dx_1^2} = -\frac{w}{2}x_1^2 + wax_1 - \frac{wa^2}{2}$$

$$EI\frac{dv_1}{dx_1} = -\frac{w}{6}x_1^3 + \frac{wa}{2}x_1^2 - \frac{wa^2}{2}x_1 + C_1 \qquad (1)$$

$$EI\,v_1 = -\frac{w}{24}x_1^4 + \frac{wa}{6}x_1^3 - \frac{wa^2}{4}x_1^2 + C_1x_1 + C_2 \qquad (2)$$

For $M_3(x) = 0$; $\qquad EI\frac{d^2v_3}{dx_3^2} = 0 \qquad (3)$

$$EI\frac{dv_3}{dx_3} = C_3 \qquad (4)$$

$$EI\,v_3 = C_3x_3 + C_4$$

Boundary Conditions:

At $x_1 = 0, \frac{dv_1}{dx_1} = 0$

From Eq. (1),

$0 = -0 + 0 - 0 + C_1; \quad C_1 = 0$

At $x_1 = 0, \quad v_1 = 0$

From Eq. (2),

$0 = -0 - 0 - 0 + 0 + C_2; \qquad C_2 = 0$

Continuity Conditions:

At $x_1 = a, \qquad x_3 = L - a; \qquad \frac{dv_1}{dx_1} = -\frac{dv_3}{dx_3}$

$$-\frac{wa^3}{6} + \frac{wa^3}{2} - \frac{wa^3}{2} = -C_3; \quad C_3 = +\frac{wa^3}{6}$$

At $x_1 = a, x_3 = L - a \qquad v_1 = v_3$

$$-\frac{wa^4}{24} + \frac{wa^4}{6} - \frac{wa^4}{4} = \frac{wa^3}{6}(L - a) + C_4; \quad C_4 = \frac{wa^4}{24} - \frac{wa^3L}{6}$$

12–30. Continued

The Slope:

$$\frac{dv_1}{dx_3} = \frac{wa^3}{6EI}$$

$$\theta_B = \left.\frac{dv_1}{dx_3}\right|_{x_1=0} = \frac{wa^3}{6EI} \circlearrowleft$$ **Ans.**

The Elastic Curve:

$$v_1 = \frac{wx_1^2}{24EI}[-x_1^2 + 4ax_1 - 6a^2]$$ **Ans.**

$$v_2 = \frac{wa^3}{24EI}[4x_3 + a - 4L]$$ **Ans.**

$$v_3 = \left.v_3\right|_{x_3=a} = \frac{wa^3}{24EI}(a - 4L)$$ **Ans.**

Ans:
$\theta_B = -\frac{wa^3}{6EI}$, $v_1 = \frac{wx_1^2}{24EI}[-x_1^2 + 4ax_1 - 6a^2]$,
$v_2 = \frac{wa^3}{24EI}[4x_3 + a - 4L]$, $v_B = \frac{wa^3}{24EI}(a - 4L)$

12–31. The shaft is supported at A by a journal bearing that exerts only vertical reactions on the shaft, and at C by a thrust bearing that exerts horizontal and vertical reactions on the shaft. Determine the equation of the elastic curve. EI is constant.

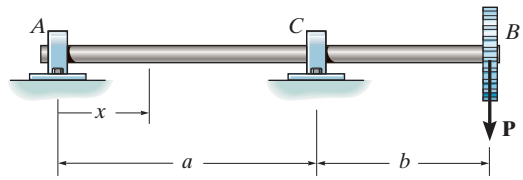

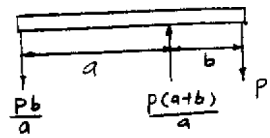

$$M = -\frac{Pb}{a}\langle x - 0\rangle - \left(-\frac{P(a+b)}{a}\langle x - a\rangle\right) = -\frac{Pb}{a}x + \frac{P(a+b)}{a}\langle x - a\rangle$$

$$EI\frac{d^2v}{dx^2} = M$$

$$EI\frac{d^2v}{dx^2} = -\frac{Pb}{a}x + \frac{P(a+b)}{a}\langle x - a\rangle$$

$$EI\frac{dv}{dx} = -\frac{Pb}{2a}x^2 + \frac{P(a+b)}{2a}\langle x - a\rangle^2 + C_1 \qquad (1)$$

$$EIv = -\frac{Pb}{6a}x^3 + \frac{P(a+b)}{6a}\langle x - a\rangle^3 + C_1x + C_2 \qquad (2)$$

Boundary Conditions:

At $x = 0, v = 0$

From Eq. (2)

$0 = -0 + 0 + 0 + C_2; \qquad C_2 = 0$

At $x = a, v = 0$

From Eq. (2)

$$0 = -\frac{Pb}{6a}(a^3) + 0 + C_1a + 0; \qquad C_1 = \frac{Pab}{6}$$

From Eq. (2),

$$v = \frac{1}{EI}\left[-\frac{Pb}{6a}x^3 + \frac{P(a+b)}{6a}\langle x - a\rangle^3 + \frac{Pab}{6}x\right] \qquad \textbf{Ans.}$$

Ans:

$$v = \frac{1}{EI}\left[-\frac{Pb}{6a}x^3 + \frac{P(a+b)}{6a}\langle x - a\rangle^3 + \frac{Pab}{6}x\right]$$

***12–32.** The shaft supports the two pulley loads shown. Determine the equation of the elastic curve. The bearings at A and B exert only vertical reactions on the shaft. EI is constant.

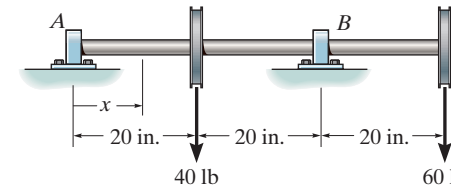

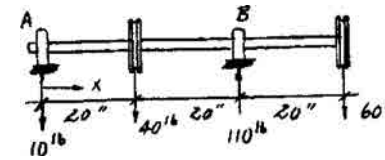

$$M = -10\langle x - 0\rangle - 40\langle x - 20\rangle - (-110)\langle x - 40\rangle$$

$$M = -10x - 40\langle x - 20\rangle + 110\langle x - 40\rangle$$

Elastic Curve and Slope:

$$EI\frac{d^2v}{dx^2} = M$$

$$EI\frac{d^2v}{dx^2} = -10x - 40\langle x - 20\rangle + 110\langle x - 40\rangle$$

$$EI\frac{dv}{dx} = -5x^2 - 20\langle x - 20\rangle^2 + 55\langle x - 40\rangle^2 + C_1$$

$$EIv = -1.667x^3 - 6.667\langle x - 20\rangle^3 + 18.33\langle x - 40\rangle^3 + C_1x + C_2 \qquad (1)$$

Boundary Conditions:

$v = 0$ at $x = 0$

From Eq. (1):

$C_2 = 0$

$v = 0$ at $x = 40$ in.

$0 = -106{,}666.67 - 53{,}333.33 + 0 + 40C_1$

$C_1 = 4000$

$$v = \frac{1}{EI}[-1.67x^3 - 6.67\langle x - 20\rangle^3 + 18.3\langle x - 40\rangle^3 + 4000x]\ \text{lb}\cdot\text{in}^3 \qquad \textbf{Ans.}$$

12–33. Determine the equation of the elastic curve, the maximum deflection in region BC, and the deflection of end A of the shaft. EI is constant.

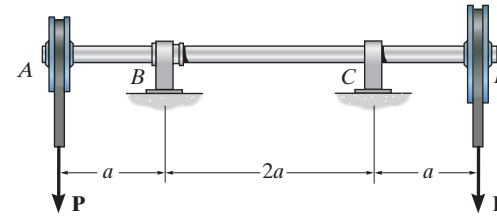

Support Reactions and Elastic Curve. As shown in Fig. a.

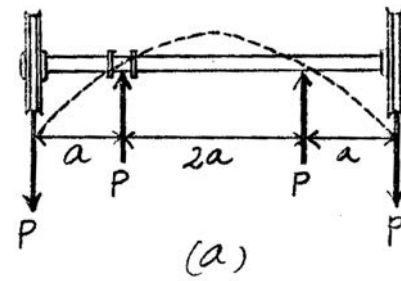

Moment Function.

$$M = -P\langle x - 0\rangle - (-P)\langle x - a\rangle - (-P)\langle x - 3a\rangle$$

$$= -Px + P\langle x - a\rangle + P\langle x - 3a\rangle$$

Equations of Slope and Elastic Curve.

$$EI\frac{d^2v}{dx^2} = M$$

$$EI\frac{d^2v}{dx^2} = -Px + P\langle x - a\rangle + P\langle x - 3a\rangle$$

$$EI\frac{dv}{dx} = -\frac{P}{2}x^2 + \frac{P}{2}\langle x - a\rangle^2 + \frac{P}{2}\langle x - 3a\rangle^2 + C_1 \qquad (1)$$

$$EIv = -\frac{P}{6}x^3 + \frac{P}{6}\langle x - a\rangle^3 + \frac{P}{6}\langle x - 3a\rangle^3 + C_1x + C_2 \qquad (2)$$

Boundary Conditions. Due to symmetry, $\frac{dv}{dx} = 0$ at $x = 2a$. Then Eq. (1) gives

$$EI(0) = -\frac{P}{2}(2a)^2 + \frac{P}{2}\langle 2a - a\rangle^2 + 0 + C_1 \qquad C_1 = \frac{3Pa^2}{2}$$

At $x = a, v = 0$. Then Eq. (2) gives

$$EI(0) = -\frac{P}{6}a^3 + 0 + 0 + \frac{3Pa^2}{2}(a) + C_2 \qquad C_2 = \frac{4Pa^3}{3}$$

Substituting the values of C_1 and C_2 into Eq. (2),

$$v = \frac{P}{6EI}[-x^3 + \langle x - a\rangle^3 + \langle x - 3a\rangle^3 + 9a^2x - 8a^3] \qquad \textbf{Ans.}$$

$(v_{\max})_{BC}$ occurs at $x = 2a$, where $\frac{dv}{dx} = 0$. Thus,

$$(v_{\max})_{BC} = v|_{x=2a} = \frac{P}{6\,EI}[-(2a)^3 + \langle 2a - a\rangle^3 + 0 + 9a^2(2a) - 8a^3]$$

$$= \frac{Pa^3}{2EI}\uparrow \qquad \textbf{Ans.}$$

At $A, x = 0$. Then,

$$v_A = v|_{x=0} = \frac{P}{6EI}[-0 + 0 + 0 + 0 - 8a^3]$$

$$= -\frac{4Pa^3}{3EI} = \frac{4Pa^3}{3EI}\downarrow \qquad \textbf{Ans.}$$

Ans:
$v = \frac{P}{6EI}[-x^3 + \langle x - a\rangle^3 + \langle x - 3a\rangle^3 + 9a^2x - 8a^3]$,
$(v_{\max})_{BC} = \frac{Pa^3}{2EI}\uparrow$, $v_A = \frac{4Pa^3}{3EI}\downarrow$

12–34. Determine the equation of the elastic curve, the maximum deflection in region AB, and the deflection of end C of the shaft. EI is constant.

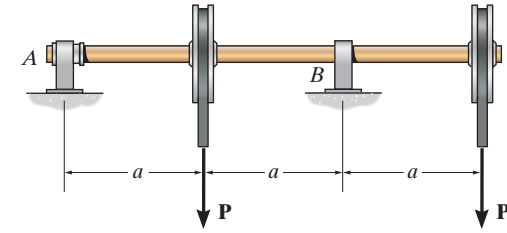

Support Reactions and Elastic Curve. As shown in Fig. *a*.

Moment Function.

$$M = -P\langle x - a\rangle - (-2P)\langle x - 2a\rangle$$
$$= -P\langle x - a\rangle + 2P\langle x - 2a\rangle$$

Equations of Slope and Elastic Curve.

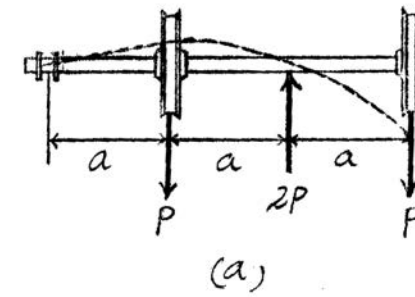

$$EI\frac{d^2v}{dx^2} = M$$

$$EI\frac{d^2v}{dx^2} = -P\langle x - a\rangle + 2P\langle x - 2a\rangle$$

$$EI\frac{dv}{dx} = \frac{-P}{2}\langle x - a\rangle^2 + P\langle x - 2a\rangle^2 + C_1 \qquad (1)$$

$$EIv = \frac{-P}{6}\langle x - a\rangle^3 + \frac{P}{3}\langle x - 2a\rangle^3 + C_1x + C_2 \qquad (2)$$

Boundary Conditions. At $x = 0, v = 0$. Then Eq. (2) gives

$$EI(0) = -0 + 0 + C_1(0) + C_2 \qquad C_2 = 0$$

At $x = 2a, v = 0$. Then Eq. (2) gives

$$EI(0) = -\frac{P}{6}(2a - a)^3 + \frac{P}{3}(2a - 2a)^3 + C_1(2a) + 0 \qquad C_1 = \frac{Pa^2}{12}$$

Substituting the value of C_1 into Eq. (1),

$$\frac{dv}{dx} = \frac{P}{12EI}[-6\langle x - a\rangle^2 + 12\langle x - 2a\rangle^2 + a^2]$$

Assuming that $\frac{dv}{dx} = 0$ occurs in the region $a < x < 2a$,

$$-6(x - a)^2 + 0 + a^2 = 0 \qquad x = 1.4082a \text{ (O.K.)}$$

Substituting the values of C_1 and C_2 into Eq. (2),

$$v = \frac{P}{12EI}[-2\langle x - a\rangle^3 + 4\langle x - 2a\rangle^3 + a^2x] \qquad \textbf{Ans.}$$

$(v_{\max})_{AB}$ occurs at $x = 1.4082a$, where $\frac{dv}{dx} = 0$. Thus,

$$(v_{\max})_{AB} = v|_{x=1.4082a} = \frac{P}{12EI}[-2\langle 1.4082a - a\rangle^3 + 0 + a^2(1.4082a)]$$

$$= \frac{0.106Pa^3}{EI}\uparrow \qquad \textbf{Ans.}$$

At $C, x = 3a$. Thus,

$$v_C = v|_{x=3a} = \frac{P}{12EI}[-2\langle 3a - a\rangle^3 + 4(3a - 2a)^3 + a^2(3a)]$$

$$= -\frac{3Pa^3}{4EI} = \frac{3Pa^3}{4EI}\downarrow \qquad \textbf{Ans.}$$

Ans:

$$v = \frac{P}{12EI}[-2\langle x - a\rangle^3 + 4\langle x - 2a\rangle^3 + a^2x],$$

$$(v_{\max})_{AB} = \frac{0.106Pa^3}{EI}\uparrow,\ v_C = \frac{3Pa^3}{4EI}\downarrow$$

12–35. The beam is subjected to the load shown. Determine the equation of the elastic curve. EI is constant.

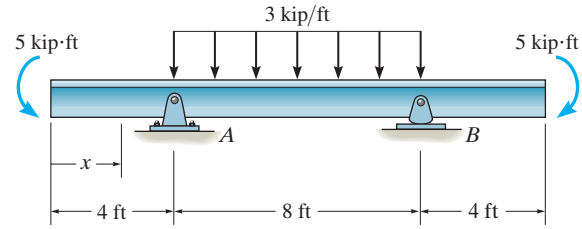

$$M = -5\langle x-0\rangle^0 - (-12)\langle x-4\rangle - \frac{3}{2}\langle x-4\rangle^2 - (-12)\langle x-12\rangle - \left(\frac{-3}{2}\right)\langle x-12\rangle^2$$

$$M = -5 + 12\langle x-4\rangle - \frac{3}{2}\langle x-4\rangle^2 + 12\langle x-12\rangle + \frac{3}{2}\langle x-12\rangle^2$$

Elastic curve and slope:

$$EI\frac{d^2v}{dx^2} = M$$

$$EI\frac{d^2v}{dx^2} = -5 + 12\langle x-4\rangle - \frac{3}{2}\langle x-4\rangle^2 + 12\langle x-12\rangle + \frac{3}{2}\langle x-12\rangle^2$$

$$EI\frac{dv}{dx} = -5x + 6\langle x-4\rangle^2 - \frac{1}{2}\langle x-4\rangle^3 + 6\langle x-12\rangle^2 + \frac{1}{2}\langle x-12\rangle^3 + C_1 \qquad (1)$$

$$EIv = \frac{-5}{2}x^2 + 2\langle x-4\rangle^3 - \frac{1}{8}\langle x-4\rangle^4 + 2\langle x-12\rangle^3 + \frac{1}{8}\langle x-12\rangle^4 + C_1x + C_2 \qquad (2)$$

Boundary Conditions:

$v = 0 \qquad \text{at} \qquad x = 4\text{ ft}$

From Eq. (2)

$$0 = -40 + 0 - 0 + 0 + 0 + 4C_1 + C_2$$

$$4C_1 + C_2 = 40 \qquad (3)$$

$v = 0 \qquad \text{at} \qquad x = 12\text{ ft.}$

$$0 = -360 + 1024 - 512 + 0 + 0 + 12C_1 + C_2$$

$$12C_1 + C_2 = -152 \qquad (4)$$

Solving Eqs. (3) and (4) yields:

$C_1 = -24 \qquad C_2 = 136$

$$v = \frac{1}{EI}\left[-2.5x^2 + 2\langle x-4\rangle^3 - \frac{1}{8}\langle x-4\rangle^4 + 2\langle x-12\rangle^3 + \frac{1}{8}\langle x-12\rangle^4 - 24x + 136\right]\text{kip}\cdot\text{ft}^3 \quad \textbf{Ans.}$$

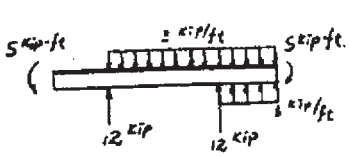

Ans:

$$v = \frac{1}{EI}\left[-2.5x^2 + 2\langle x-4\rangle^3 - \frac{1}{8}\langle x-4\rangle^4 + 2\langle x-12\rangle^3 + \frac{1}{8}\langle x-12\rangle^4 - 24x + 136\right]\text{kip}\cdot\text{ft}^3$$

***12–36.** Determine the equation of the elastic curve, the slope at A, and the deflection at B of the simply supported beam. EI is constant.

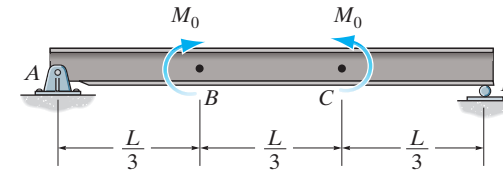

Support Reactions and Elastic Curve. As shown in Fig. *a*.

Moment Function.

$$M = -(-M_0)\left\langle x - \frac{L}{3}\right\rangle^0 - M_0\left\langle x - \frac{2}{3}L\right\rangle^0$$

$$= M_0\left\langle x - \frac{L}{3}\right\rangle^0 - M_0\left\langle x - \frac{2}{3}L\right\rangle^0$$

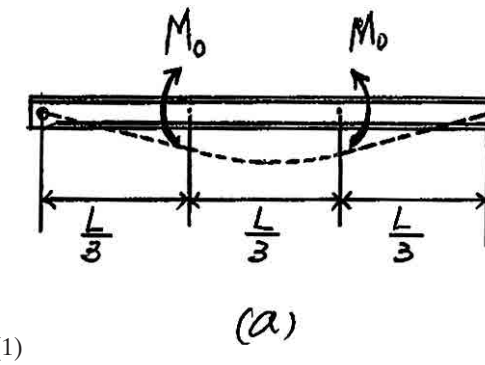

Equations of Slope and Elastic Curve.

$$EI\frac{d^2v}{dx^2} = M$$

$$EI\frac{d^2v}{dx^2} = M_0\left\langle x - \frac{L}{3}\right\rangle^0 - M_0\left\langle x - \frac{2}{3}L\right\rangle^0$$

$$EI\frac{dv}{dx} = M_0\left\langle x - \frac{L}{3}\right\rangle - M_0\left\langle x - \frac{2}{3}L\right\rangle + C_1 \qquad (1)$$

$$EIv\frac{M_0}{2}\left\langle x - \frac{L}{3}\right\rangle^2 - \frac{M_0}{2}\left\langle x - \frac{2}{3}L\right\rangle^2 + C_1x + C_2 \qquad (2)$$

Boundary Conditions. Due to symmetry, $\frac{dv}{dx} = 0$ at $x = \frac{L}{2}$. Then Eq. (1) gives

$$EI(0) = M_0\left(\frac{L}{2} - \frac{L}{3}\right) - 0 + C_1 \qquad C_1 = -\frac{M_0L}{6}$$

At $x = 0, v = 0$. Then, Eq. (2) gives

$$EI(0) = 0 - 0 + C_1(0) + C_2 \qquad C_2 = 0$$

Substituting the value of C_1 into Eq. (1),

$$\frac{dv}{dx} = \frac{M_0}{6EI}\left[6\left\langle x - \frac{L}{3}\right\rangle - 6\left\langle x - \frac{2}{3}L\right\rangle - L\right]$$

At $A, x = 0$. Thus,

$$\theta_A = \left.\frac{dv}{dx}\right|_{x=0} = \frac{M_0}{6EI}[6(0) - 6(0) - L] = -\frac{M_0L}{6EI} \qquad \textbf{Ans.}$$

Substituting the values of C_1 and C_2 into Eq. (2),

$$v = \frac{M_0}{6EI}\left[3\left\langle x - \frac{L}{3}\right\rangle^2 - 3\left\langle x - \frac{2}{3}L\right\rangle^2 - Lx\right] \qquad \textbf{Ans.}$$

At $B, x = \frac{L}{3}$. Thus,

$$v_B = v|_{x=\frac{L}{3}} = \frac{M_0}{6EI}\left[3(0) - 3(0) - L\left(\frac{L}{3}\right)\right]$$

$$= -\frac{M_0L^2}{18EI} = \frac{M_0L^2}{18EI} \quad \downarrow \qquad \textbf{Ans.}$$

12–37. Determine the equation of the elastic curve and the maximum deflection of the simply supported beam. EI is constant.

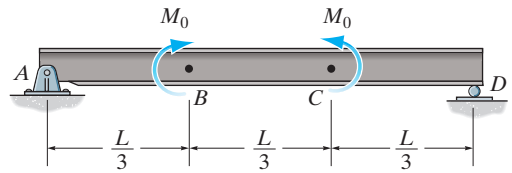

Support Reactions and Elastic Curve. As shown in Fig. *a*.

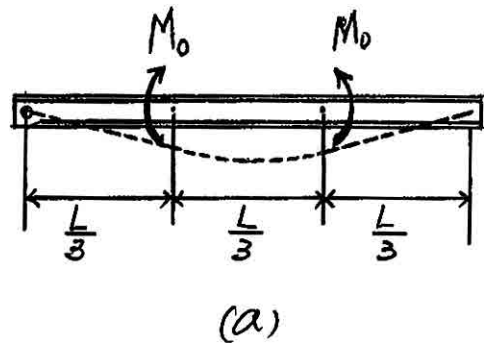

Moment Function.

$$M = -(-M_0)\left\langle x - \frac{L}{3}\right\rangle^0 - M_0\left\langle x - \frac{2}{3}L\right\rangle^0$$

$$= M_0\left\langle x - \frac{L}{3}\right\rangle^0 - M_0\left\langle x - \frac{2}{3}L\right\rangle^0$$

Equations of Slope and Elastic Curve.

$$EI\frac{d^2v}{dx^2} = M$$

$$EI\frac{d^2v}{dx^2} = M_0\left\langle x - \frac{L}{3}\right\rangle^0 - M_0\left\langle x - \frac{2}{3}L\right\rangle^0$$

$$EI\frac{dv}{dx} = M_0\left\langle x - \frac{L}{3}\right\rangle - M_0\left\langle x - \frac{2}{3}L\right\rangle + C_1 \qquad (1)$$

$$EIv\frac{M_0}{2}\left\langle x - \frac{L}{3}\right\rangle^2 - \frac{M_0}{2}\left\langle x - \frac{2}{3}L\right\rangle^2 + C_1x + C_2 \qquad (2)$$

Boundary Conditions. Due to symmetry, $\frac{dv}{dx} = 0$ at $x = \frac{L}{2}$. Then Eq. (1) gives

$$EI(0) = M_0\left(\frac{L}{2} - \frac{L}{3}\right) - 0 + C_1 \qquad C_1 = -\frac{M_0L}{6}$$

At $x = 0, v = 0$. Then, Eq. (2) gives

$$EI(0) = 0 - 0 + C_1(0) + C_2 \qquad C_2 = 0$$

Substituting the values of C_1 and C_2 into Eq. (2),

$$v = \frac{M_0}{6EI}\left[3\left\langle x - \frac{L}{3}\right\rangle^2 - 3\left\langle x - \frac{2}{3}L\right\rangle^2 - Lx\right] \qquad \textbf{Ans.}$$

v_{max} occurs at $x = \frac{L}{2}$, where $\frac{dv}{dx} = 0$. Then,

$$v_{max} = v|_{x=\frac{L}{2}} = \frac{M_0}{6EI}\left[3\left(\frac{L}{2} - \frac{L}{3}\right)^2 - 0 - L\left(\frac{L}{2}\right)\right]$$

$$= -\frac{5M_0L^2}{72EI} = \frac{5M_0L^2}{72EI}\downarrow \qquad \textbf{Ans.}$$

Ans:
$$v = \frac{M_0}{6EI}\left[3\left\langle x - \frac{L}{3}\right\rangle^2 - 3\left\langle x - \frac{2}{3}L\right\rangle^2 - Lx\right],$$
$$v_{max} = \frac{5M_0L^2}{72EI}\downarrow$$

12–38. The beam is subjected to the loads shown. Determine the equation of the elastic curve. *EI* constant.

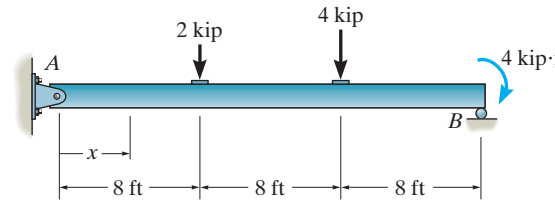

$$M = -(-2.5)\langle x - 0\rangle - 2\langle x - 8\rangle - 4\langle x - 16\rangle$$

$$M = 2.5x - 2\langle x - 8\rangle - 4\langle x - 16\rangle$$

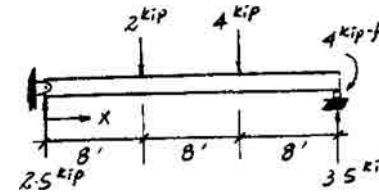

Elastic Curve and Slope:

$$EI\frac{d^2v}{dx^2} = M = 2.5x - 2\langle x - 8\rangle - 4\langle x - 16\rangle$$

$$EI\frac{dv}{dx} = 1.25x^2 - \langle x - 8\rangle^2 - 2\langle x - 16\rangle^2 + C_1$$

$$EIv = 0.417x^3 - 0.333\langle x - 8\rangle^3 - 0.667\langle x - 16\rangle^3 + C_1x + C_2 \qquad (1)$$

Boundary Conditions:

$$v = 0 \quad \text{at} \quad x = 0$$

From Eq. (1), $C_2 = 0$

$$v = 0 \quad \text{at} \quad x = 24 \text{ ft.}$$

$$0 = 5760 - 1365.33 - 341.33 + 24C_1$$

$$C_1 = -169$$

$$v = \frac{1}{EI}[0.417\,x^3 - 0.333\langle x - 8\rangle^3 - 0.667\langle x - 16\rangle^3 - 169x]\ \text{kip}\cdot\text{ft}^3 \qquad \textbf{Ans.}$$

Ans:

$$v = \frac{1}{EI}[0.417x^3 - 0.333\langle x - 8\rangle^3 - 0.667\langle x - 16\rangle^3 - 169x]\ \text{kip}\cdot\text{ft}^3$$

12–39. Determine the maximum deflection of the cantilevered beam. The beam is made of material having an $E = 200$ GPa and $I = 65.0(10^6)$ mm^4.

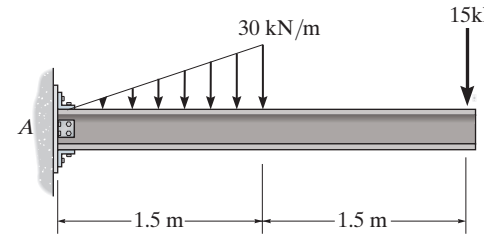

Support Reactions and Elastic Curve. As shown in Fig. *a*.

Moment Function. From Fig. *b*, we obtain

$$M = -(-37.5)\langle x - 0\rangle - 67.5\langle x - 0\rangle^0 - \frac{20}{6}\langle x - 0\rangle^3$$

$$- \left(-\frac{20}{6}\right)\langle x - 1.5\rangle^3 - \left(-\frac{30}{2}\right)\langle x - 1.5\rangle^2$$

$$= 37.5x - 67.5 - \frac{10}{3}x^3 + \frac{10}{3}\langle x - 1.5\rangle^3 + 15\langle x - 1.5\rangle^2$$

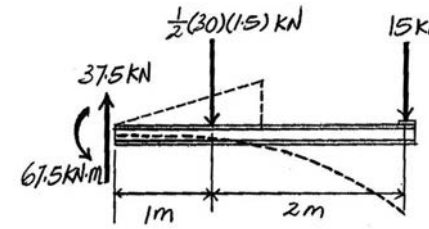

(a)

Equations of Slope and Elastic Curve.

$$EI\frac{d^2v}{dx^2} = M$$

$$EI\frac{d^2v}{dx^2} = 37.5x - 67.5 - \frac{10}{3}x^3 + \frac{10}{3}\langle x - 1.5\rangle^3 + 15\langle x - 1.5\rangle^2$$

$$EI\frac{dv}{dx} = 18.75x^2 - 67.5x - \frac{5}{6}x^4 + \frac{5}{6}\langle x - 1.5\rangle^4 + 5\langle x - 1.5\rangle^3 + C_1 \qquad (1)$$

$$EIv = 6.25x^3 - 33.75x^2 - \frac{1}{6}x^5 + \frac{1}{6}\langle x - 1.5\rangle^5 + \frac{5}{4}\langle x - 1.5\rangle^4 + C_1x + C_2 \qquad (2)$$

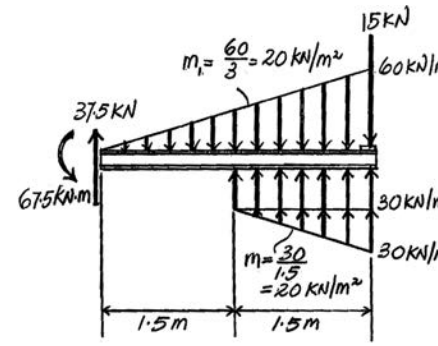

(b)

Boundary Conditions. At $x = 0, \dfrac{dv}{dx} = 0$. Then Eq. (1) gives

$$0 = 0 - 0 - 0 + 0 + 0 + C_1 \qquad C_1 = 0$$

At $x = 0, v = 0$. Then Eq. (2) gives

$$0 = 0 - 0 - 0 + 0 + 0 + 0 + C_2 \qquad C_2 = 0$$

Substituting the values of C_1 and C_2 into Eq. (2),

$$v = \frac{1}{EI}\left[6.25x^3 - 33.75x^2 - \frac{1}{6}x^5 + \frac{1}{6}\langle x - 1.5\rangle^5 + \frac{5}{4}\langle x - 1.5\rangle^4\right]$$

v_{max} occurs at $x = 3$ m. Thus

$$v_{max} = v|_{x=3\text{ m}}$$

$$= \frac{1}{EI}\left[6.25\left(3^3\right) - 33.75\left(3^2\right) - \frac{1}{6}\left(3^5\right) + \frac{1}{6}(3 - 1.5)^5 + \frac{5}{4}(3 - 1.5)^4\right]$$

$$= -\frac{167.91\text{ kN}\cdot\text{m}^3}{EI} = -\frac{167.91\left(10^3\right)}{200\left(10^9\right)\left[65.0\left(10^{-6}\right)\right]}$$

$$= -0.01292\text{ m} = 12.9\text{ mm}\downarrow \qquad \textbf{Ans.}$$

Ans:
$v_{max} = 12.9$ mm$\downarrow$

***12–40.** Determine the slope at A and the deflection of end C of the overhang beam. $E = 29(10^3)$ ksi and $I = 204\ \text{in}^4$.

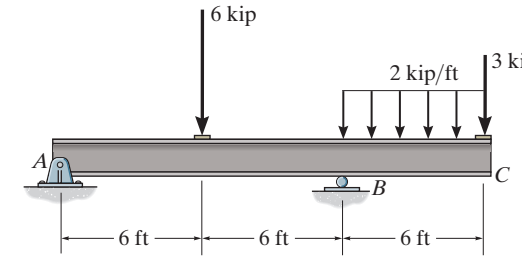

Support Reactions and Elastic Curve. As shown in Fig. *a*.

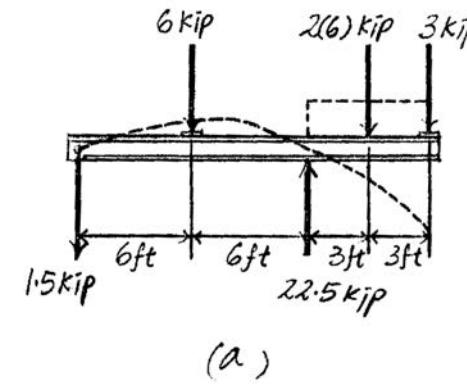

Moment Function. From Fig. *a*, we obtain

$$M = -1.5\langle x - 0\rangle - 6\langle x - 6\rangle - (-22.5)\langle x - 12\rangle - \frac{2}{2}\langle x - 12\rangle^2$$
$$= -1.5x - 6\langle x - 6\rangle + 22.5\langle x - 12\rangle - \langle x - 12\rangle^2$$

Equations of Slope and Elastic Curve.

$$EI\frac{d^2v}{dx^2} = M$$

$$EI\frac{d^2v}{dx^2} = -1.5x - 6\langle x - 6\rangle + 22.5\langle x - 12\rangle - \langle x - 12\rangle^2$$

$$EI\frac{dv}{dx} = -0.75x^2 - 3\langle x - 6\rangle^2 + 11.25\langle x - 12\rangle^2 - \frac{1}{3}\langle x - 12\rangle^3 + C_1 \qquad (1)$$

$$EIv = -0.25x^3 - \langle x - 6\rangle^3 + 3.75\langle x - 12\rangle^3 - \frac{1}{12}\langle x - 12\rangle^4 + C_1x + C_2 \qquad (2)$$

Boundary Conditions. At $x = 0$, $v = 0$. Then Eq. (2) gives

$$0 = -0 - 0 + 0 - 0 + C_1(0) + C_2 \qquad C_2 = 0$$

At $x = 12\,\text{ft}$, $v = 0$. Then Eq. (2) gives

$$0 = -0.25(12^3) - (12 - 6)^3 + 0 - 0 + C_1(12) + 0 \qquad C_1 = 54\,\text{kip}\cdot\text{ft}^2$$

Substituting the value of C_1 into Eq. (1),

$$\frac{dv}{dx} = \frac{1}{EI}\left[-0.75x^2 - 3\langle x - 6\rangle^2 + 11.25\langle x - 12\rangle^2 - \frac{1}{3}\langle x - 12\rangle^3 + 54\right]$$

At A, $x = 0$. Thus,

$$\theta_A = \left.\frac{dv}{dx}\right|_{x=0} = \frac{1}{EI}[-0 - 0 + 0 - 0 + 54]$$
$$= \frac{54\ \text{kip}\cdot\text{ft}^2}{EI} = \frac{54(12^2)}{29(10^3)(204)} = 0.00131\ \text{rad} \qquad \textbf{Ans.}$$

Substituting the values of C_1 and C_2 into Eq. (2),

$$v = \frac{1}{EI}\left[-0.25x^3 - \langle x - 6\rangle^3 + 3.75\langle x - 12\rangle^3 - \frac{1}{12}\langle x - 12\rangle^4 + 54x\right] \qquad \textbf{Ans.}$$

12–40. Continued

At C, $x = 18\,\text{ft}$. Thus,

$$v_C = v|_{x=18\,\text{ft}} = \frac{1}{EI}\left[-0.25(18^3) - (18-6)^3 + 3.75(18-12)^3 - \frac{1}{12}(18-12)^4 + 54(18)\right]$$

$$= -\frac{1512\,\text{kip}\cdot\text{ft}^3}{EI} = -\frac{1512(12^3)}{29(10^3)(204)} = -0.442\text{ in} = 0.442\text{ in}\downarrow \qquad \textbf{Ans.}$$

12–41. Determine the maximum deflection in region AB of the overhang beam. $E = 29(10^3)$ ksi and $I = 204\ \text{in}^4$.

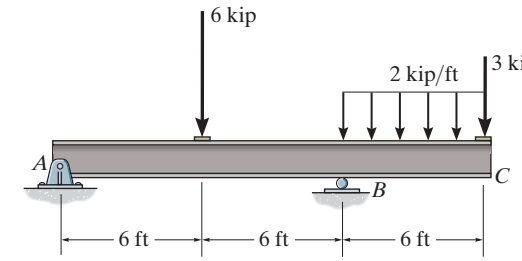

Support Reactions and Elastic Curve. As shown in Fig. *a*.

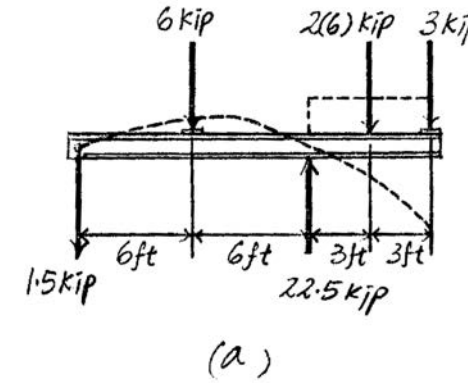

Moment Function. From Fig. *a*, we obtain

$$M = -1.5\langle x - 0\rangle - 6\langle x - 6\rangle - (-22.5)\langle x - 12\rangle - \frac{2}{2}\langle x - 12\rangle^2$$
$$= -1.5x - 6\langle x - 6\rangle + 22.5\langle x - 12\rangle - \langle x - 12\rangle^2$$

Equations of Slope and Elastic Curve.

$$EI\frac{d^2v}{dx^2} = M$$

$$EI\frac{d^2v}{dx^2} = -1.5x - 6\langle x - 6\rangle + 22.5\langle x - 12\rangle - \langle x - 12\rangle^2$$

$$EI\frac{dv}{dx} = -0.75x^2 - 3\langle x - 6\rangle^2 + 11.25\langle x - 12\rangle^2 - \frac{1}{3}\langle x - 12\rangle^3 + C_1 \qquad (1)$$

$$EIv = -0.25x^3 - \langle x - 6\rangle^3 + 3.75\langle x - 12\rangle^3 - \frac{1}{12}\langle x - 12\rangle^4 + C_1x + C_2 \qquad (2)$$

Boundary Conditions. At $x = 0$, $v = 0$. Then Eq. (2) gives

$$0 = -0 - 0 + 0 - 0 + C_1(0) + C_2 \qquad C_2 = 0$$

At $x = 12$ ft, $v = 0$. Then Eq. (2) gives

$$0 = -0.25(12^3) - (12 - 6)^3 + 0 - 0 + C_1(12) + 0 \qquad C_1 = 54\,\text{kip}\cdot\text{ft}^2$$

Substituting the value of C_1 into Eq. (1),

$$\frac{dv}{dx} = \frac{1}{EI}\left[-0.75x^2 - 3\langle x - 6\rangle^2 + 11.25\langle x - 12\rangle^2 - \frac{1}{3}\langle x - 12\rangle^3 + 54\right]$$

Assuming that $\frac{dv}{dx} = 0$ occurs in the region 6 ft $< x <$ 12 ft, then

$$\frac{dv}{dx} = 0 = \frac{1}{EI}\left[-0.75x^2 - 3(x - 6)^2 + 0 - 0 + 54\right]$$

$$-0.75x^2 - 3(x - 6)^2 + 54 = 0$$

$$3.75x^2 - 36x + 54 = 0$$

Solving for the root 6 ft $< x <$ 12 ft,

$$x = 7.7394\ \text{ft}$$

12–41. Continued

Substituting the values of C_1 and C_2 into Eq. (2),

$$v = \frac{1}{EI}\left[-0.25x^3 - \langle x - 6\rangle^3 + 3.75\langle x - 12\rangle^3 - \frac{1}{12}\langle x - 12\rangle^4 + 54x\right]$$

$$(v_{\max})_{AB} = v\big|_{x=7.7394\,\text{ft}} = \frac{1}{EI}\left[-0.25(7.7394^3) - (7.7394 - 6)^3 + 0 - 0 + 54(7.7394)\right]$$

$$= \frac{296.77\,\text{kip}\cdot\text{ft}^3}{EI} = \frac{296.77(12^3)}{29(10^3)(204)}$$

$$= 0.0867\text{ in}\uparrow$$ **Ans.**

Ans:
$(v_{\max})_{AB} = 0.0867\text{ in.}\uparrow$

12–42. The beam is subjected to the load shown. Determine the equation of the elastic curve. *EI* is constant.

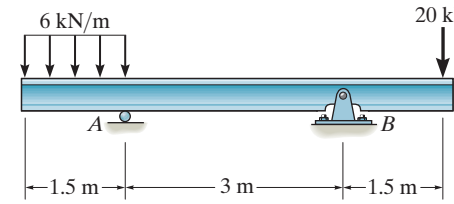

$$M = -\frac{6}{2}\langle x - 0\rangle^2 - (-1.25)\langle x - 1.5\rangle - \left(-\frac{6}{2}\right)\langle x - 1.5\rangle^2 - (-27.75)\langle x - 4.5\rangle$$

$$M = -3x^2 + 1.25\langle x - 1.5\rangle + 3\langle x - 1.5\rangle^2 + 27.75\langle x - 4.5\rangle$$

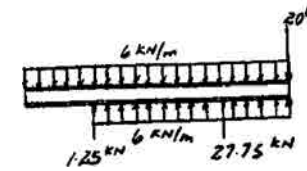

Elastic Curve and Slope:

$$EI\frac{d^2v}{dx^2} = M = -3x^2 + 1.25\langle x - 1.5\rangle + 3\langle x - 1.5\rangle^2 + 27.75\langle x - 4.5\rangle$$

$$EI\frac{dv}{dx} = -x^3 + 0.625\langle x - 1.5\rangle^2 + \langle x - 1.5\rangle^3 + 13.875\langle x - 4.5\rangle^2 + C_1$$

$$EIv = -0.25x^4 + 0.208\langle x - 1.5\rangle^3 + 0.25\langle x - 1.5\rangle^4 + 4.625\langle x - 4.5\rangle^3 + C_1x + C_2 \qquad (1)$$

Boundary Conditions:

$$v = 0 \qquad \text{at} \qquad x = 1.5\text{ m}$$

From Eq. (1),

$$0 = -1.266 + 1.5C_1 + C_2$$

$$1.5C_1 + C_2 = 1.266 \qquad (2)$$

$$v = 0 \qquad \text{at} \qquad x = 4.5\text{ m}$$

From Eq. (1),

$$0 = -102.516 + 5.625 + 20.25 + 4.5C_1 + C_2$$

$$4.5C_1 + C_2 = 76.641 \qquad (3)$$

Solving Eqs. (2) and (3) yields:

$$C_1 = 25.12$$

$$C_2 = -36.42 \qquad \textbf{Ans.}$$

$$v = \frac{1}{EI}[-0.25x^4 + 0.208\langle x - 1.5\rangle^3 + 0.25\langle x - 1.5\rangle^4 + 4.625\langle x - 4.5\rangle^3 + 25.1x - 36.4]\ \text{kN}\cdot\text{m}^3$$

Ans:

$$v = \frac{1}{EI}[-0.25x^4 + 0.208\langle x - 1.5\rangle^3 + 0.25\langle x - 1.5\rangle^4 + 4.625\langle x - 4.5\rangle^3 + 25.1x - 36.4]\ \text{kN}\cdot\text{m}^3$$

12–43. Determine the equation of the elastic curve. EI is constant.

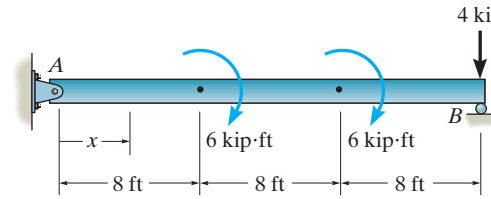

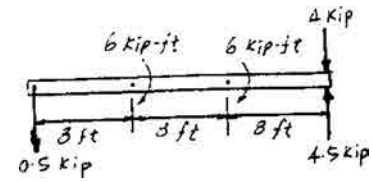

$$M = -0.5\langle x - 0\rangle - (-6)\langle x - 8\rangle^0 - (-6)\langle x - 16\rangle^0$$

$$= -0.5x + 6\langle x - 8\rangle^0 + 6\langle x - 16\rangle^0$$

$$EI\frac{d^2v}{dx^2} = M$$

$$EI\frac{d^2v}{dx^2} = -0.5x + 6\langle x - 8\rangle^0 + 6\langle x - 16\rangle^0$$

$$EI\frac{dv}{dx} = -0.25x^2 + 6\langle x - 8\rangle + 6\langle x - 16\rangle + C_1 \qquad (1)$$

$$EIv = -\frac{0.25}{3}x^3 + 3\langle x - 8\rangle^2 + 3\langle x - 16\rangle^2 + C_1x + C_2 \qquad (2)$$

Boundary Conditions:

At $x = 0$, $v = 0$

From Eq. (2),

$0 = -0 + 0 + 0 + 0 + C_2$; $\qquad C_2 = 0$

At $x = 24$ ft, $v = 0$

$$0 = -\frac{0.25}{3}(24)^3 + 3(24 - 8)^2 + 3(24 - 16)^2 + 24C_1; \qquad C_1 = 8.0$$

The Elastic Curve:

$$v = \frac{1}{EI}[-0.0833x^3 + 3\langle x - 8\rangle^2 + 3\langle x - 16\rangle^2 + 8.00x]\ \text{kip}\cdot\text{ft}^3 \qquad \textbf{Ans.}$$

Ans:

$$v = \frac{1}{EI}[-0.0833x^3 + 3\langle x - 8\rangle^2 + 3\langle x - 16\rangle^2 + 8.00x]$$

***12–44.** The beam is subjected to the load shown. Determine the equation of the elastic curve. *EI* is constant.

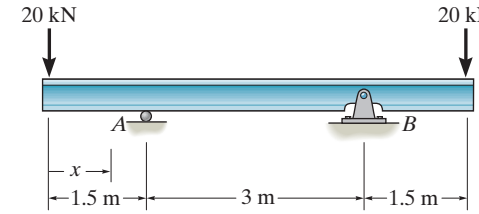

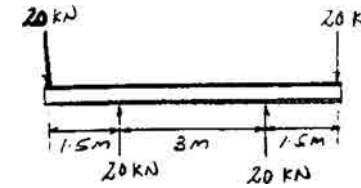

$$M = -20\langle x - 0\rangle - (-20)\langle x - 1.5\rangle - (-20)\langle x - 4.5\rangle$$
$$= -20x + 20\langle x - 1.5\rangle + 20\langle x - 4.5\rangle$$

$$EI\frac{d^2v}{dx^2} = M$$

$$EI\frac{d^2v}{dx^2} = -20x + 20\langle x - 1.5\rangle + 20\langle x - 4.5\rangle$$

$$EI\frac{dv}{dx} = -10x^2 + 10\langle x - 1.5\rangle^2 + 10\langle x - 4.5\rangle^2 + C_1 \qquad (1)$$

$$EIv = -\frac{10}{3}x^3 + \frac{10}{3}\langle x - 1.5\rangle^3 + \frac{10}{3}\langle x - 4.5\rangle^3 + C_1x + C_2 \qquad (2)$$

Boundary Conditions:

Due to symmetry, at $x = 3$ m, $\frac{dv}{dx} = 0$

From Eq. (1),

$0 = -10(3^2) + 10(1.5)^2 + 0 + C_1; \quad C_1 = 67.5$

At $x = 1.5$ m, $\quad v = 0$

From Eq. (2),

$0 = -\frac{10}{3}(1.5)^3 + 0 + 0 + 67.5(1.5) + C_2; \quad C_2 = -90.0$

Hence,

$$v = \frac{1}{EI}\left[-\frac{10}{3}x^3 + \frac{10}{3}\langle x - 1.5\rangle^3 + \frac{10}{3}\langle x - 4.5\rangle^3 + 67.5x - 90\right] \text{kN}\cdot\text{m}^3 \quad \textbf{Ans.}$$

12–45. Determine the deflection at each of the pulleys C, D, and E. The shaft is made of steel and has a diameter of 30 mm. The bearings at A and B exert only vertical reactions on the shaft. $E_{st} = 200$ GPa.

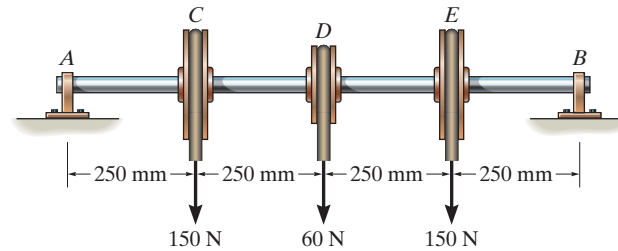

$$M = -(-180)\langle x - 0\rangle - 150\langle x - 0.25\rangle - 60\langle x - 0.5\rangle - 150\langle x - 0.75\rangle$$

$$M = 180x - 150\langle x - 0.25\rangle - 60\langle x - 0.5\rangle - 150\langle x - 0.75\rangle$$

Elastic Curve and Slope:

$$EI\frac{d^2v}{dx^2} = M = 180x - 150\langle x - 0.25\rangle - 60\langle x - 0.5\rangle - 150\langle x - 0.75\rangle$$

$$EI\frac{dv}{dx} = 90x^2 - 75\langle x - 0.25\rangle^2 - 30\langle x - 0.50\rangle^2 - 75\langle x - 0.75\rangle^2 + C_1 \qquad (1)$$

$$EIv = 30x^3 - 25\langle x - 0.25\rangle^3 - 10\langle x - 0.50\rangle^3 - 25\langle x - 0.75\rangle^3 + C_1x + C_2 \qquad (2)$$

Boundary Conditions:

$$v = 0 \quad \text{at} \quad x = 0$$

From Eq. (2),

$$C_2 = 0$$

$$v = 0 \quad \text{at} \quad x = 1.0\text{ m}$$

$$0 = 30 - 10.55 - 1.25 - 0.39 + C_1$$

$$C_1 = -17.8125$$

$$v = \frac{1}{EI}[30x^3 - 25\langle x - 0.25\rangle^3 - 10\langle x - 0.5\rangle^3 - 25\langle x - 0.75\rangle^3 - 17.8125x]$$

$$v_C = v\Big|_{x=0.25\text{ m}} = \frac{-3.984}{EI} = \frac{-3.984}{200(10^9)\frac{\pi}{4}(0.015)^4} = -0.000501\text{ m} = -0.501\text{ mm} \qquad \textbf{Ans.}$$

$$v_D = v\Big|_{x=0.5\text{ m}} = \frac{-5.547}{200(10^9)\frac{\pi}{4}(0.015)^4} = -0.000698\text{ m} = -0.698\text{ mm} \qquad \textbf{Ans.}$$

$$v_E = v\Big|_{x=0.75\text{ m}} = \frac{-3.984}{EI} = -0.501\text{ mm} \qquad \text{(symmetry check !)} \qquad \textbf{Ans.}$$

The negative signs indicate downward displacement.

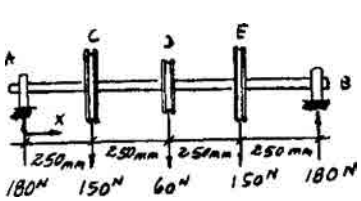

Ans:
$v_C = -0.501$ mm, $v_D = -0.698$ mm,
$v_E = -0.501$ mm

12–46. Determine the slope of the shaft at the bearings at A and B. The shaft is made of steel and has a diameter of 30 mm. The bearings at A and B exert only vertical reactions on the shaft. $E_{st} = 200$ GPa.

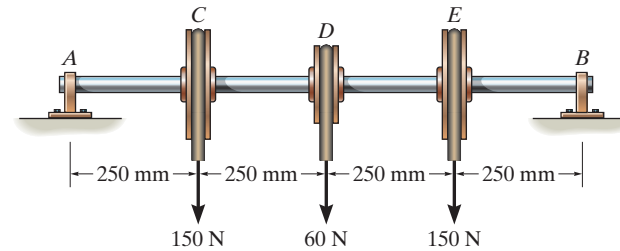

$$M = -(-180)\langle x - 0\rangle - 150\langle x - 0.25\rangle - 60\langle x - 0.5\rangle - 150\langle x - 0.75\rangle$$

$$M = 180x - 150\langle x - 0.25\rangle - 60\langle x - 0.5\rangle - 150\langle x - 0.75\rangle$$

Elastic Curve and Slope:

$$EI\frac{d^2v}{dx^2} = M = 180x - 150\langle x - 0.25\rangle - 60\langle x - 0.5\rangle - 150\langle x - 0.75\rangle$$

$$EI\frac{dv}{dx} = 90x^2 - 75\langle x - 0.25\rangle^2 - 30\langle x - 0.50\rangle^2 - 75\langle x - 0.75\rangle^2 + C_1 \qquad (1)$$

$$EIv = 30x^3 - 25\langle x - 0.25\rangle^3 - 10\langle x - 0.50\rangle^3 - 25\langle x - 0.75\rangle^3 + C_1x + x_2 \qquad (2)$$

Boundary Conditions:

$$v = 0 \qquad \text{at} \qquad x = 0$$

From Eq. (2)

$$C_2 = 0$$

$$v = 0 \qquad \text{at} \qquad x = 1.0\text{ m}$$

$$0 = 30 - 10.55 - 1.25 - 0.39 + C_1$$

$$C_1 = -17.8125$$

$$\frac{dv}{dx} = \frac{1}{EI}[90x^2 - 75\langle x - 0.25\rangle^2 - 30\langle x - 0.5\rangle^2 - 75\langle x - 0.75\rangle^2 - 17.8125] \qquad (3)$$

$$\theta_A = \left.\frac{dv}{dx}\right|_{x=0} = \frac{-17.8125}{EI} = \frac{-17.8125}{200(10^9)\frac{\pi}{4}(0.015)^4} = -0.00224\text{ rad} = -0.128^\circ \qquad \textbf{Ans.}$$

The negative sign indicates clockwise rotation.

$$\theta_B = \left.\frac{dv}{dx}\right|_{x=1\text{ m}} = \frac{17.8125}{EI} = 0.128^\circ \qquad \textbf{Ans.}$$

The positive result indicates counterclockwise rotation.

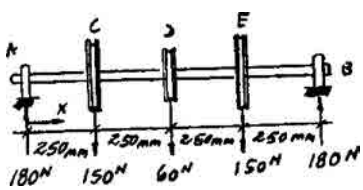

Ans:

$\theta_A = -0.128^\circ, \theta_B = 0.128^\circ$

12–47. The shaft is made of steel and has a diameter of 15 mm. Determine its maximum deflection. The bearings at A and B exert only vertical reactions on the shaft. $E_{st} = 200$ GPa.

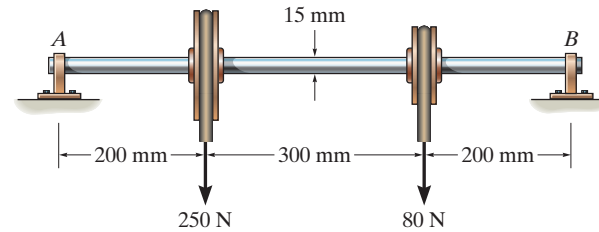

$$M = -(-201.43)\langle x - 0\rangle - 250\langle x - 0.2\rangle - 80\langle x - 0.5\rangle$$

$$M = 201.43x - 250\langle x - 0.2\rangle - 80\langle x - 0.5\rangle$$

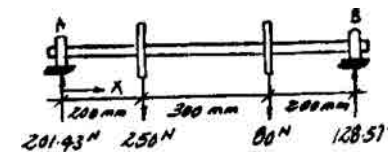

Elastic Curve and Slope:

$$EI\frac{d^2v}{dx^2} = M = 201.43x - 250\langle x - 0.2\rangle - 80\langle x - 0.5\rangle$$

$$EI\frac{dv}{dx} = 100.72x^2 - 125\langle x - 0.2\rangle^2 - 40\langle x - 0.5\rangle^2 + C_1$$

$$EIv = 33.72x^2 - 41.67\langle x - 0.2\rangle^3 - 13.33\langle x - 0.5\rangle^3 + C_1x + C_2 \qquad (1)$$

Boundary Conditions:

$$v = 0 \quad \text{at} \quad x = 0$$

From Eq. (1)

$$C_2 = 0$$

$$v = 0 \quad \text{at} \quad x = 0.7\text{ m}$$

$$0 = 11.515 - 5.2083 - 0.1067 + 0.7C_1$$

$$C_1 = -8.857$$

$$\frac{dv}{dx} = \frac{1}{EI}[100.72x^2 - 125\langle x - 0.2\rangle^1 - 40\langle x - 0.5\rangle^2 - 8.857]$$

Assume v_{max} occurs at $0.2\text{ m} < x < 0.5\text{ m}$

$$\frac{dv}{dx} = 0 = \frac{1}{EI}[100.72x^2 - 125(x - 0.2)^2 - 8.857]$$

$$24.28x^2 - 50x + 13.857 = 0$$

$$x = 0.3300\text{ m} \quad \text{OK}$$

$$v = \frac{1}{EI}[33.57x^3 - 41.67\langle x - 0.2\rangle^3 - 13.33\langle x - 0.5\rangle^3 - 8.857x]$$

Substitute $x = 0.3300$ m into the elastic curve:

$$v_{max} = -\frac{1.808\text{ N}\cdot\text{m}^3}{EI} = -\frac{1.808}{200(10^9)\frac{\pi}{4}(0.0075)^4} = -0.00364 = 3.64\text{ mm}\downarrow \qquad \textbf{Ans.}$$

Ans:
$v_{max} = -3.64$ mm

***12–48.** The wooden beam is subjected to the load shown. Determine the equation of the elastic curve. Specify the deflection at the end C. $E_w = 1.6(10^3)$ ksi.

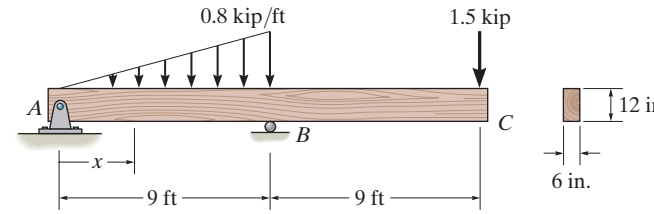

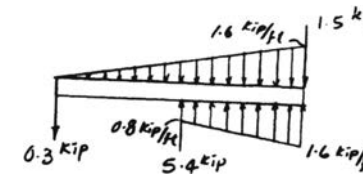

$$M = -0.3\langle x - 0\rangle - \frac{1}{6}\left(\frac{1.6}{18}\right)\langle x - 0\rangle^3 - (-5.4)\langle x - 9\rangle$$

$$-\left(-\frac{0.8}{2}\right)\langle x - 9\rangle^2 - \frac{1}{6}\left(-\frac{0.8}{9}\right)\langle x - 9\rangle^3$$

$$M = -0.3x - 0.0148x^3 + 5.4\langle x - 9\rangle + 0.4\langle x - 9\rangle^2$$

$$+ 0.0148\langle x - 9\rangle^3$$

Elastic Curve and Slope:

$$EI\frac{d^2v}{dx^2} = M = -0.3x - 0.0148x^3 + 5.4\langle x - 9\rangle + 0.4\langle x - 9\rangle^2$$

$$+ 0.0148\langle x - 9\rangle^3$$

$$EI\frac{dv}{dx} = -0.15x^2 - 0.003704x^4 + 2.7\langle x - 9\rangle^2 + 0.1333\langle x - 9\rangle^3$$

$$+ 0.003704\langle x - 9\rangle^4 + C_1$$

$$EIv = -0.05x^3 + 0.0007407x^5 + 0.9\langle x - 9\rangle^3 + 0.03333\langle x - 9\rangle^4$$

$$+ 0.0007407\langle x - 9\rangle^5 + C_1x + C_2 \qquad (1)$$

Boundary Conditions:

$v = 0$ at $x = 0$

From Eq.(1)

$C_2 = 0$

$v = 0$ at $x = 9$ ft

From Eq.(1)

$$0 = -36.45 - 43.74 + 0 + 0 + 0 + 9C_1$$

$$C_1 = 8.91$$

$$v = \frac{1}{EI}\left[-0.05x^3 - 0.000741x^5 + 0.9\langle x - 9\rangle^3 + 0.0333\langle x - 9\rangle^4\right.$$

$$\left. + 0.000741\langle x - 9\rangle^5 + 8.91x\right] \text{ kip}\cdot\text{ft}^3 \qquad \textbf{Ans.}$$

At point C, $x = 18$ ft

$$v_C = \frac{-612.36 \text{ kip}\cdot\text{ft}^3}{EI} = \frac{-612.36(12^3)}{1.6(10^3)(\frac{1}{12})(6)(12^3)} = -0.765 \text{ in.} \qquad \textbf{Ans.}$$

The negative sign indicates downward displacement.

12–49. Determine the displacement C and the slope at A of the beam. EI is constant.

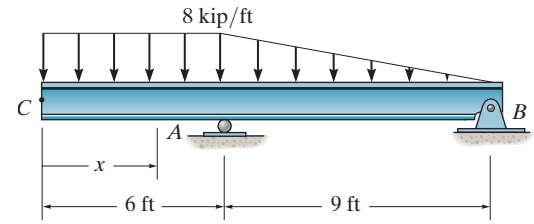

Support Reactions and Elastic Curve: As shown on FBD.

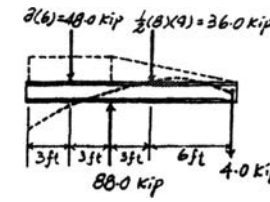

Moment Function: Using the discontinuity function,

$$M = -\frac{1}{2}(8)\langle x-0\rangle^2 - \frac{1}{6}\left(-\frac{8}{9}\right)\langle x-6\rangle^3 - (-88)\langle x-6\rangle$$

$$= -4x^2 + \frac{4}{27}\langle x-6\rangle^3 + 88\langle x-6\rangle$$

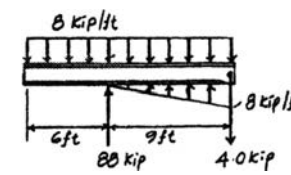

Slope and Elastic Curve:

$$EI\frac{d^2v}{dx^2} = M$$

$$EI\frac{d^2v}{dx^2} = -4x^2 + \frac{4}{27}\langle x-6\rangle^3 + 88\langle x-6\rangle$$

$$EI\frac{dv}{dx} = -\frac{4}{3}x^3 + \frac{1}{27}\langle x-6\rangle^4 + 44\langle x-6\rangle^2 + C_1 \qquad [1]$$

$$EI\,v = -\frac{1}{3}x^4 + \frac{1}{135}\langle x-6\rangle^5 + \frac{44}{3}\langle x-6\rangle^3 + C_1x + C_2 \qquad [2]$$

Boundary Conditions:

$v = 0$ at $x = 6$ ft. From Eq. [2],

$$0 = -\frac{1}{3}\left(6^4\right) + 0 + 0 + C_1(6) + C_2$$

$$432 = 6C_1 + C_2 \qquad [3]$$

$v = 0$ at $x = 15$ ft. From Eq. [2],

$$0 = -\frac{1}{3}\left(15^4\right) + \frac{1}{135}(15-6)^5 + \frac{44}{3}(15-6)^3 + C_1(15) + C_2$$

$$5745.6 = 15C_1 + C_2 \qquad [4]$$

Solving Eqs. [3] and [4] yields,

$$C_1 = 590.4 \qquad C_2 = -3110.4$$

The Slope: Substitute the value of C_1 into Eq.[1],

$$\frac{dv}{dx} = \frac{1}{EI}\left\{-\frac{4}{3}x^3 + \frac{1}{27}\langle x-6\rangle^4 + 44\langle x-6\rangle^2 + 590.4\right\}\ \text{kip}\cdot\text{ft}^2$$

$$\theta_A = \left.\frac{dv}{dx}\right|_{x=6\,\text{ft}} = \frac{1}{EI}\left\{-\frac{4}{3}\left(6^3\right) + 0 + 0 + 590.4\right\} = \frac{302\ \text{kip}\cdot\text{ft}^2}{EI} \qquad \textbf{Ans.}$$

The Elastic Curve: Substitute the values of C_1 and C_2 into Eq. [2],

$$v = \frac{1}{EI}\left\{-\frac{1}{3}x^4 + \frac{1}{135}\langle x-6\rangle^5 + \frac{44}{3}\langle x-6\rangle^3 + 590.4x - 3110.4\right\}\ \text{kip}\cdot\text{ft}^3$$

$$v_C = v|_{x=0} = \frac{1}{EI}\{-0+0+0+0-3110.4\}\,\text{kip}\cdot\text{ft}^3 = -\frac{3110\ \text{kip}\cdot\text{ft}^3}{EI} \qquad \textbf{Ans.}$$

Ans:

$$\theta_A = \frac{302}{EI}\ \text{kip}\cdot\text{ft}^2,\ v_C = -\frac{3110}{EI}\ \text{kip}\cdot\text{ft}^3$$

12–50. The beam is subjected to the load shown. Determine the equations of the slope and elastic curve. EI is constant.

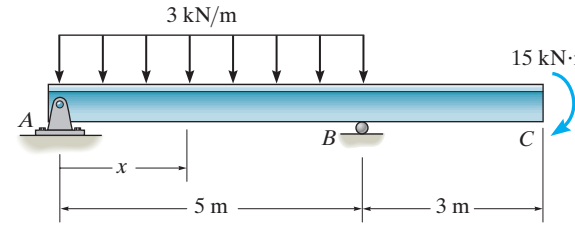

$$M = -(-4.5)\langle x - 0\rangle - \frac{3}{2}\langle x - 0\rangle^2 - (-10.5)\langle x - 5\rangle - \left(\frac{-3}{2}\right)\langle x - 5\rangle^2$$

$$M = 4.5x - 1.5x^2 + 10.5\langle x - 5\rangle + 1.5\langle x - 5\rangle^2$$

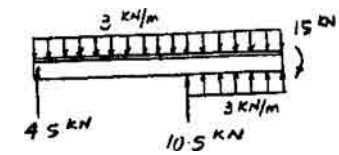

Elastic Curve and Slope:

$$EI\frac{d^2v}{dx^2} = M = 4.5x - 1.5x^2 + 10.5\langle x - 5\rangle + 1.5\langle x - 5\rangle^2$$

$$EI\frac{dv}{dx} = 2.25x^2 - 0.5x^3 + 5.25\langle x - 5\rangle^2 + 0.5\langle x - 5\rangle^3 + C_1 \qquad (1)$$

$$EIv = 0.75x^3 - 0.125x^4 + 1.75\langle x - 5\rangle^3 + 0.125\langle x - 5\rangle^4 + C_1x + C_2 \qquad (2)$$

Boundary Conditions:

$$v = 0 \quad \text{at} \quad x = 0$$

From Eq. (2), $C_2 = 0$

$$v = 0 \quad \text{at} \quad x = 5$$

$$0 = 93.75 - 78.125 + 5C_1$$

$$C_1 = -3.125$$

$$\frac{dv}{dx} = \frac{1}{EI}[2.25x^2 - 0.5x^3 + 5.25\langle x - 5\rangle^2 + 0.5\langle x - 5\rangle^3 - 3.125]\ \text{kN}\cdot\text{m}^2 \qquad \textbf{Ans.}$$

$$v = \frac{1}{EI}[0.75x^3 - 0.125x^4 + 1.75\langle x - 5\rangle^3 + 0.125\langle x - 5\rangle^4 - 3.125x]\ \text{kN}\cdot\text{m}^3 \qquad \textbf{Ans.}$$

Ans:

$$\frac{dv}{dx} = \frac{1}{EI}[2.25x^2 - 0.5x^3 + 5.25\langle x - 5\rangle^2 + 0.5\langle x - 5\rangle^3 - 3.125]\ \text{kN}\cdot\text{m}^2,$$

$$v = \frac{1}{EI}[0.75x^3 - 0.125x^4 + 1.75\langle x - 5\rangle^3 + 0.125\langle x - 5\rangle^4 - 3.125x]\ \text{kN}\cdot\text{m}^3$$

12–51. Determine the slope and deflection at C. EI is constant.

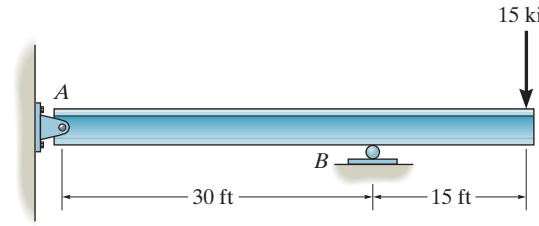

$$\theta_A = \frac{|t_{B/A}|}{30}$$

$$t_{B/A} = \frac{1}{2}\left(\frac{-225}{EI}\right)(30)(10) = \frac{-33\,750}{EI}$$

$$\theta_A = \frac{1125}{EI}$$

$$\theta_{C/A} = \frac{1}{2}\left(\frac{-225}{EI}\right)(30) + \frac{1}{2}\left(\frac{-225}{EI}\right)(15) = \frac{-5062.5}{EI}$$

$$\theta_C = \theta_{C/A} + \theta_A$$

$$\theta_C = -\frac{5062.5}{EI} + \frac{1125}{EI} = -\frac{3937.5}{EI}$$ **Ans.**

$$\Delta_C = |t_{C/A}| - \frac{45}{30}|t_{B/A}|$$

$$t_{C/A} = \frac{1}{2}\left(-\frac{-225}{EI}\right)(30)(25) + \frac{1}{2}\left(-\frac{225}{EI}\right)(15)(10) = -\frac{101\,250}{EI}$$

$$\Delta_C = \frac{101.250}{EI} - \frac{45}{30}\left(\frac{33\,750}{EI}\right) = \frac{50\,625}{EI}\downarrow$$ **Ans.**

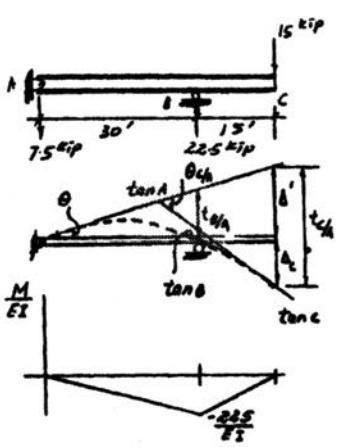

Ans:

$$\theta_C = -\frac{3937.5}{EI},\ \Delta_C = \frac{50\,625}{EI}\downarrow$$

***12–52.** Determine the slope and deflection at C. EI is constant.

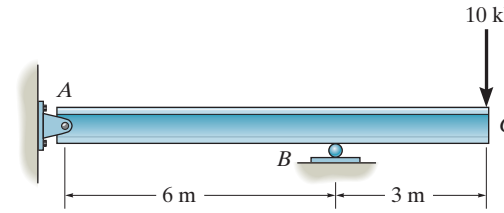

Referring to Fig. b,

$$|\theta_{C/A}| = \frac{1}{2}\left(\frac{30}{EI}\right)(9) = \frac{135\ \text{kN}\cdot\text{m}^2}{EI}$$

$$|t_{B/A}| = \frac{6}{3}\left[\frac{1}{2}\left(\frac{30}{EI}\right)(6)\right] = \frac{180\ \text{kN}\cdot\text{m}^3}{EI}$$

$$|t_{C/A}| = \left(\frac{6}{3}+3\right)\left[\frac{1}{2}\left(\frac{30}{EI}\right)(6)\right] + \left[\frac{2}{3}(3)\right]\left[\frac{1}{2}\left(\frac{30}{EI}\right)(3)\right]$$

$$= \frac{540\ \text{kN}\cdot\text{m}^3}{EI}$$

From the geometry shown in Fig. b,

$$\theta_A = \frac{|t_{B/A}|}{6} = \frac{180/EI}{6} = \frac{30\ \text{kN}\cdot\text{m}^2}{EI}$$

Here,

$$+\circlearrowleft \theta_C = \theta_A + \theta_{C/A}$$

$$\theta_C = -\frac{30}{EI} + \frac{135}{EI}$$

$$\theta_C = \frac{105\ \text{kN}\cdot\text{m}^2}{EI} \qquad \textbf{Ans.}$$

$$v_C = |t_{C/A}| - |t_{B/A}|\left(\frac{9}{6}\right)$$

$$= \frac{540}{EI} - \frac{180}{EI}\left(\frac{9}{6}\right)$$

$$= \frac{270\ \text{kN}\cdot\text{m}^3}{EI} \downarrow \qquad \textbf{Ans.}$$

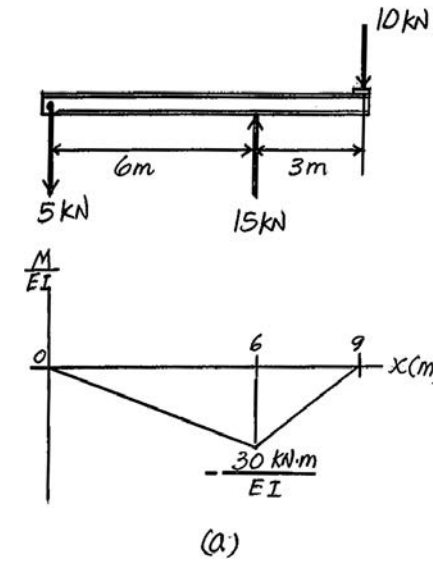

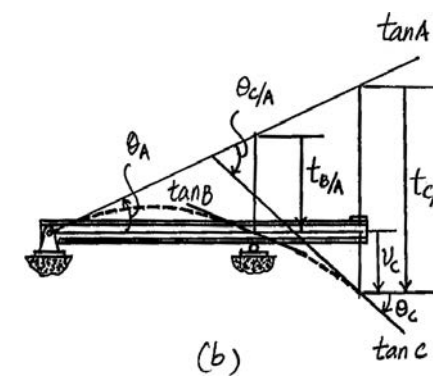

12–53. Determine the deflection of end B of the cantilever beam. EI is constant.

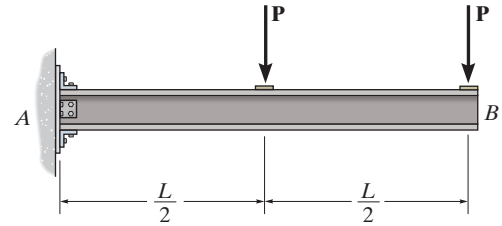

Support Reactions and $\frac{M}{EI}$ Diagram. As shown in Fig. *a*.

Moment Area Theorem. Since A is a fixed support, $\theta_A = 0$. Referring to the geometry of the elastic curve, Fig. *b*,

$$\theta_B = |\theta_{B/A}| = \frac{1}{2}\left[\frac{3PL}{2EI} + \frac{PL}{2EI}\right]\left(\frac{L}{2}\right) + \frac{1}{2}\left[\frac{PL}{2EI}\right]\left(\frac{L}{2}\right)$$

$$= \frac{5PL^2}{8\,EI} \circlearrowright \qquad \textbf{Ans.}$$

$$\Delta_B = |t_{B/A}| = \left(\frac{3L}{4}\right)\left(\frac{PL}{2EI}\right)\left(\frac{L}{2}\right) + \frac{5L}{6}\left[\frac{1}{2}\left(\frac{PL}{EI}\right)\left(\frac{L}{2}\right)\right] + \frac{L}{3}\left[\frac{1}{2}\left(\frac{PL}{2EI}\right)\left(\frac{L}{2}\right)\right]$$

$$= \frac{7PL^3}{16EI} \downarrow \qquad \textbf{Ans.}$$

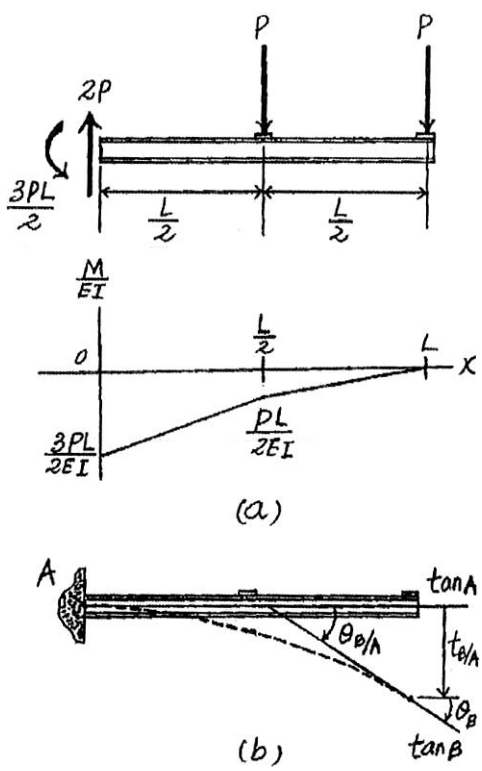

Ans:
$\theta_B = -\frac{5PL^2}{8\,EI}$, $\Delta_B = \frac{7PL^3}{16EI}\downarrow$

12–54. If the bearings at A and B exert only vertical reactions on the shaft, determine the slope at B and the deflection at C. EI is constant.

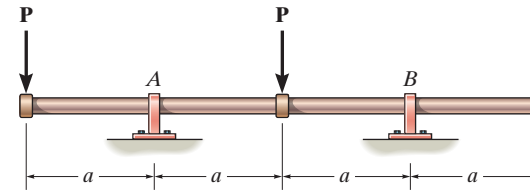

$$t_{A/B} = \frac{1}{2}\left(-\frac{Pa}{EI}\right)(a)\left(\frac{a}{3}\right) = \frac{Pa^3}{6EI}$$

$$\theta_B = -\frac{|t_{A/B}|}{2a} = -\frac{Pa^3/6EI}{2a} = -\frac{Pa^2}{12EI}$$ **Ans.**

$$\Delta_C = \theta_B a = \frac{Pa^2}{12EI}(a) = \frac{Pa^3}{12EI}$$ **Ans.**

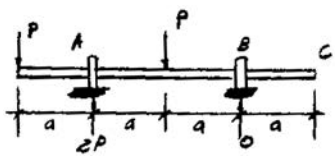

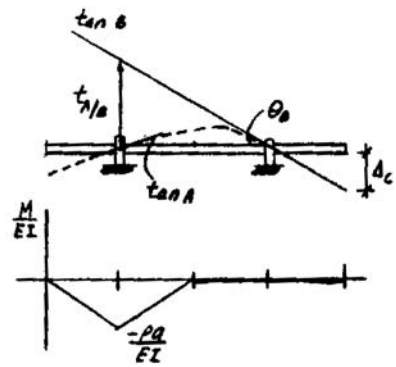

Ans:

$$\theta_B = -\frac{Pa^2}{12EI}, \Delta_C = \frac{Pa^3}{12EI}$$

12–55. The composite simply supported steel shaft is subjected to a force of 10 kN at its center. Determine its maximum deflection. $E_{st} = 200$ GPa.

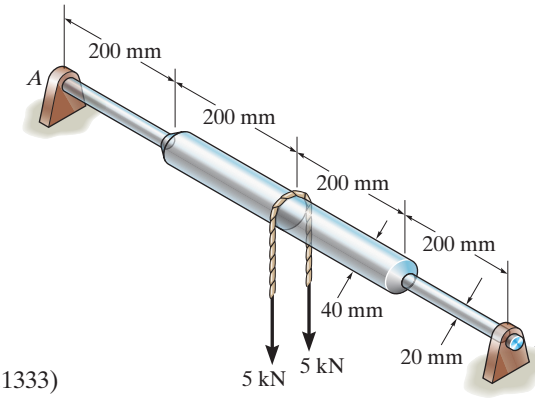

$$\Delta_{max} = |t_{B/C}| = \frac{62.5}{EI}(0.2)(0.3) + \frac{1}{2}\left(\frac{62.5}{EI}\right)(0.2)(0.3333) + \frac{1}{2}\left(\frac{1000}{EI}\right)(0.2)(0.1333)$$

$$= \frac{19.167}{EI} = \frac{19.167}{200(10^9)(7.8540)(10^{-9})} = 0.0122 \text{ m} = 12.2 \text{ mm} \qquad \textbf{Ans.}$$

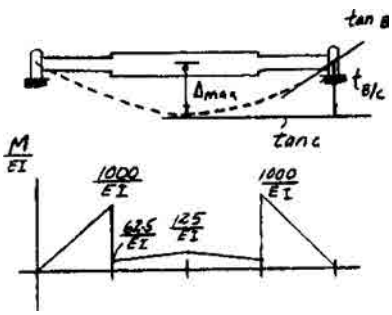

Ans:
$\Delta_{max} = 12.2$ mm

***12–56.** If the bearings at A and B exert only vertical reactions on the shaft, determine the slope at A and the maximum deflection of the shaft. EI is constant.

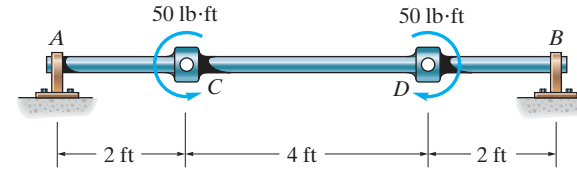

Point E is located at the mid span of the shaft. Due to symmetry, the slope at E is zero. Referring to Fig. b,

$$|\theta_{E/A}| = \frac{50}{EI}(2) = \frac{100\ \text{lb}\cdot\text{ft}^2}{EI}$$

$$|t_{E/A}| = (1)\left(\frac{50}{EI}\right)(2) = \frac{100\ \text{lb}\cdot\text{ft}^3}{EI}$$

Here,

$$\theta_A = |\theta_{E/A}| = -\frac{100\ \text{lb}\cdot\text{ft}^2}{EI} \qquad \textbf{Ans.}$$

$$v_{\max} = \theta_A(4) - |t_{E/A}|$$

$$= \frac{100}{EI}(4) - \frac{100}{EI}$$

$$= \frac{300\ \text{lb}\cdot\text{ft}^3}{EI} \uparrow \qquad \textbf{Ans.}$$

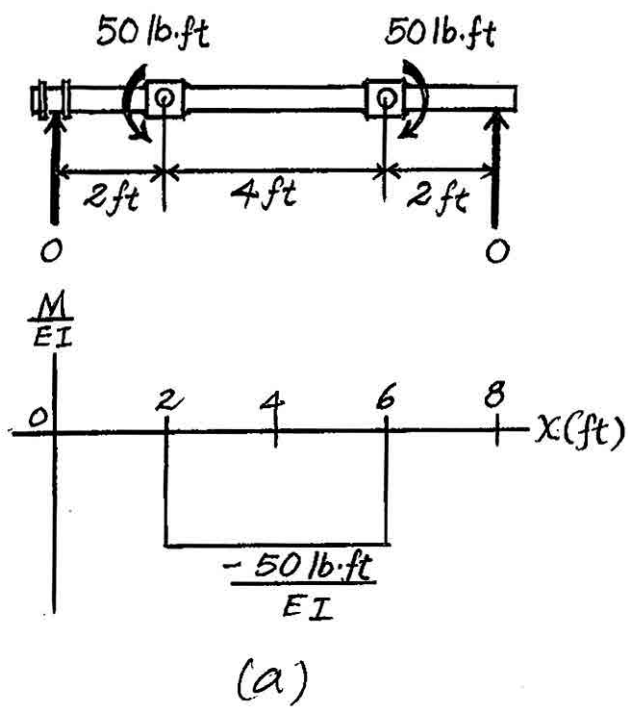

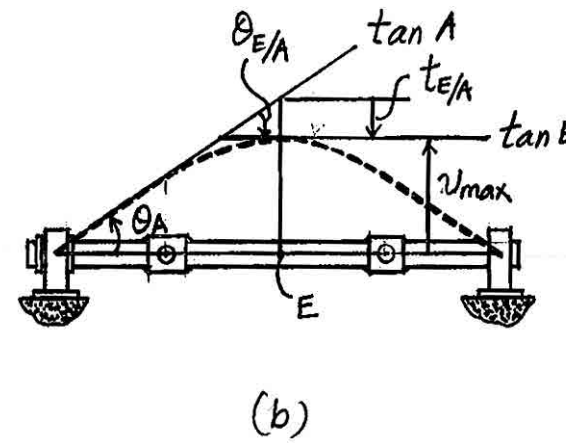

12–57. Determine the maximum deflection of the shaft. EI is constant. The bearings exert only vertical reactions on the shaft.

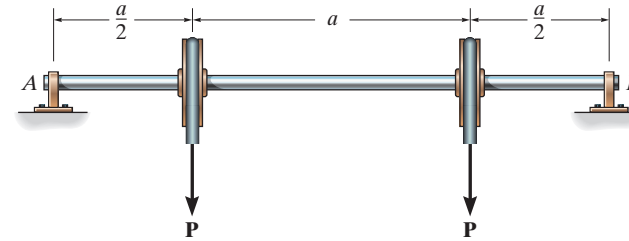

$$\Delta_{\max} = t_{A/C}$$

$$= \left(\frac{Pa}{2EI}\right)\left(\frac{a}{2}\right)\left(\frac{a}{2}+\frac{a}{4}\right) + \frac{1}{2}\left(\frac{Pa}{2EI}\right)\left(\frac{a}{2}\right)\left(\frac{a}{3}\right)$$

$$= \frac{11Pa^3}{48EI}$$ **Ans.**

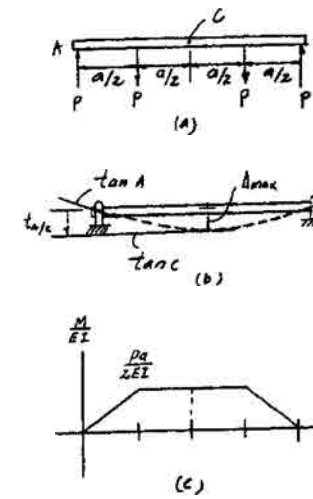

Ans:

$$\Delta_{\max} = \frac{11Pa^3}{48EI}$$

12–58. Determine the deflection at C and the slope of the beam at A, B, and C. EI is constant.

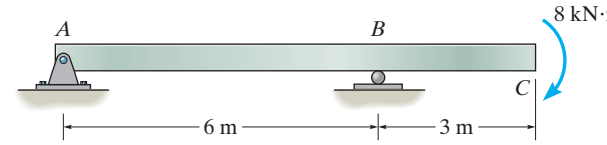

$$t_{B/A} = \frac{1}{2}\left(\frac{-8}{EI}\right)(6)(2) = \frac{-48}{EI}$$

$$t_{C/A} = \frac{1}{2}\left(\frac{-8}{EI}\right)(6)(3+2) + \left(\frac{-8}{EI}\right)(3)(1.5) = \frac{-156}{EI}$$

$$\Delta_C = |t_{C/A}| - \frac{9}{6}|t_{B/A}| = \frac{156}{EI} - \frac{9(48)}{6(EI)} = \frac{84}{EI}$$ **Ans.**

$$\theta_A = \frac{|t_{B/A}|}{6} = \frac{8}{EI}$$ **Ans.**

$$\theta_{B/A} = \frac{1}{2}\left(\frac{-8}{EI}\right)(6) = \frac{-24}{EI}$$

$$\theta_B = \theta_{B/A} + \theta_A$$

$$\theta_B = -\frac{24}{EI} + \frac{8}{EI} = -\frac{16}{EI}$$ **Ans.**

$$\theta_{C/A} = \frac{1}{2}\left(\frac{-8}{EI}\right)(6) + \left(\frac{-8}{EI}\right)(3) = \frac{-48}{EI}$$

$$\theta_C = \theta_{C/A} + \theta_A$$

$$\theta_C = -\frac{48}{EI} + \frac{8}{EI} = -\frac{40}{EI}$$ **Ans.**

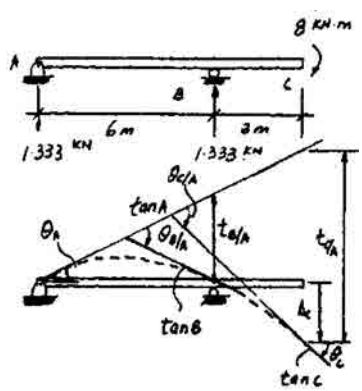

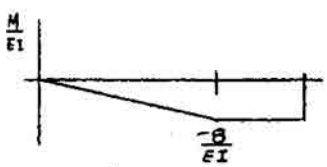

Ans:

$$\Delta_C = -\frac{84}{EI}, \theta_A = \frac{8}{EI}, \theta_B = -\frac{16}{EI}, \theta_C = -\frac{40}{EI}$$

12–59. Determine the slope at A of the solid circular shaft of diameter 100 mm. The shaft is made of steel having a modulus elasticity of $E = 200$ GPa.

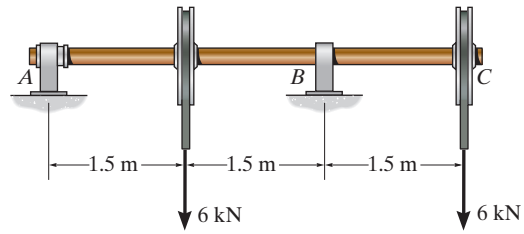

Support Reactions and $\frac{M}{EI}$ Diagram. As shown in Fig. *a*,

Moment Area Theorem. Referring to Fig. *b*,

$$|t_{B/A}| = \frac{15}{3}\left[\frac{1}{2}\left(\frac{9}{EI}\right)(1.5)\right] = \frac{3.375\ \text{kN}\cdot\text{m}^3}{EI}$$

From the geometry shown in Fig. *b*,

$$\theta_A = \frac{|t_{B/A}|}{L_{AB}} = \frac{\frac{3.375}{EI}}{3} = \frac{1.125\ \text{kN}\cdot\text{m}^2}{EI} = \frac{1.125(10^3)}{200(10^9)\left[\frac{\pi}{4}(0.05^4)\right]} = 0.00115\ \text{rad} \qquad \textbf{Ans.}$$

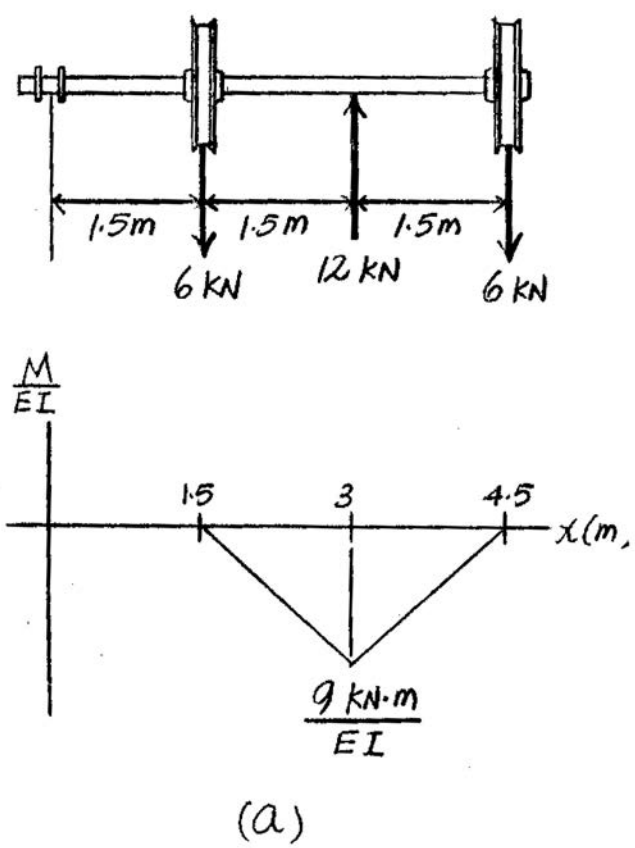

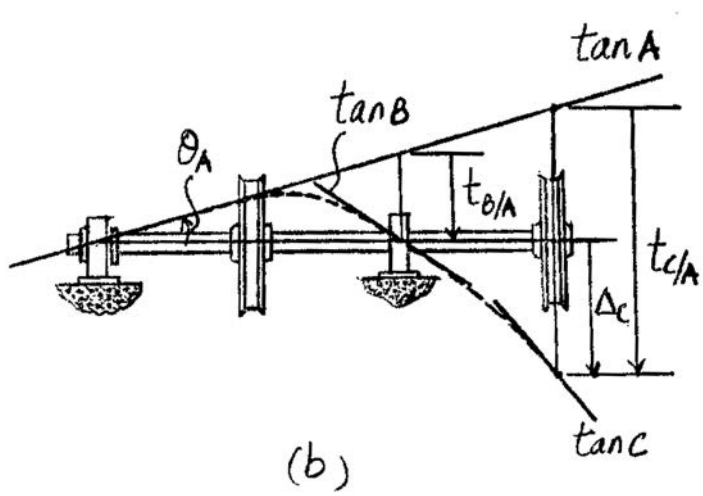

Ans:
$\theta_A = 0.00115$ rad

***12–60.** Determine the deflection at C of the solid circular shaft of diameter 100 mm. The shaft is made of steel having a modulus elasticity of $E = 200$ GPa.

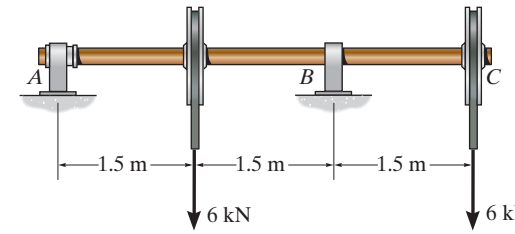

Support Reactions and $\frac{M}{EI}$ Diagram. As shown in Fig. *a*.

Moment Area Theorem. Referring to Fig. *b*,

$$|t_{B/A}| = \frac{15}{3}\left[\frac{1}{2}\left(\frac{9}{EI}\right)(1.5)\right] = \frac{3.375\ \text{kN}\cdot\text{m}^3}{EI}$$

$$|t_{C/A}| = \left(\frac{1.5}{3} + 1.5\right)\left[\frac{1}{2}\left(\frac{9}{EI}\right)(1.5)\right] + \left[\frac{2}{3}(1.5)\right]\left[\frac{1}{2}\left(\frac{9}{EI}\right)(1.5)\right] = \frac{20.25\ \text{kN}\cdot\text{m}^3}{EI}$$

Support Reactions and $\frac{M}{EI}$ Diagram. As shown in Fig. *b*.

$$\Delta_C = |t_{C/A}| - (t_{B/A})\left(\frac{4.5}{3}\right)$$

$$= \frac{20.25}{EI} - \frac{3.375}{EI}\left(\frac{4.5}{3}\right)$$

$$= \frac{15.1875\ \text{kN}\cdot\text{m}^3}{EI}$$

$$= \frac{15.1875(10^3)}{200(10^9)\left[\frac{\pi}{4}(0.05^4)\right]} = 0.01547\ \text{m} = 15.5\ \text{mm} \downarrow \qquad \textbf{Ans.}$$

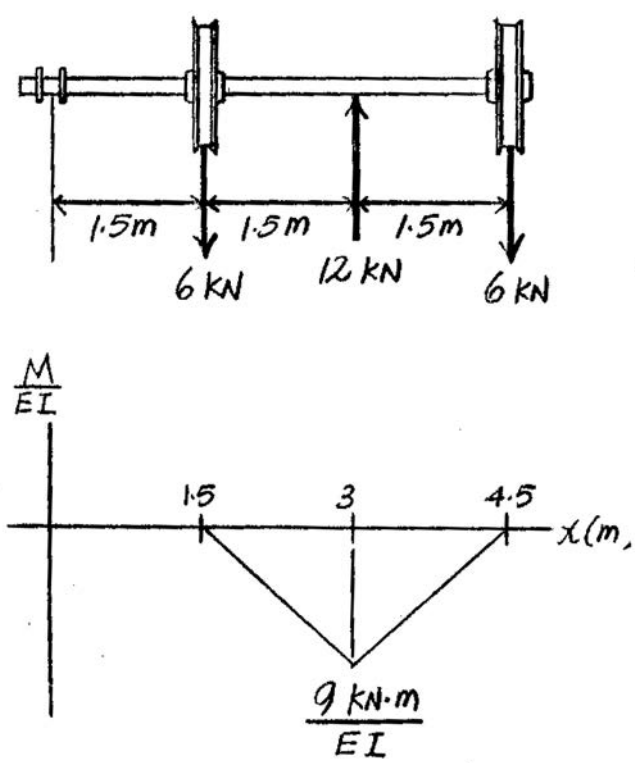

(a)

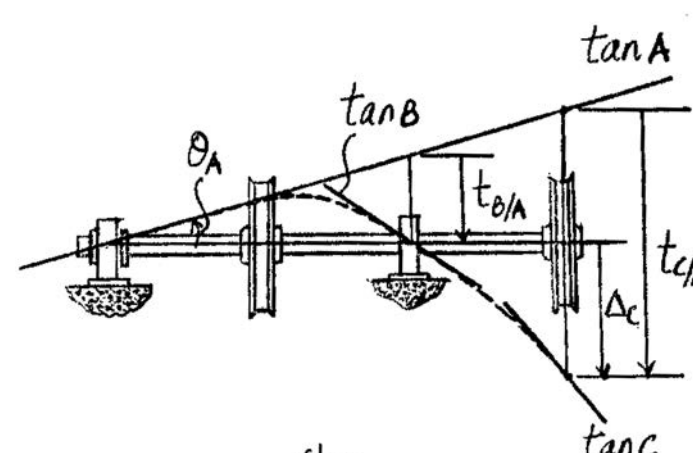

(b)

12–61. Determine the position a of roller support B in terms of L so that the deflection at end C is the same as the maximum deflection of region AB of the overhang beam. EI is constant.

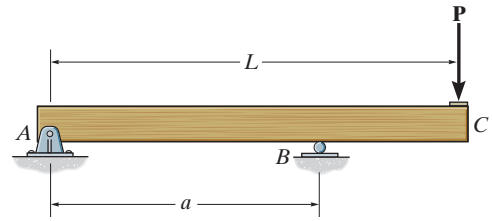

Support Reactions and $\frac{M}{EI}$ Diagram. As shown in Fig. *a*.

Moment Area Theorem. Referring to Fig. *b*,

$$|t_{B/A}| = \frac{a}{3}\left[\frac{1}{2}\left(\frac{P(L-a)}{EI}\right)(a)\right] = \frac{Pa^2(L-a)}{6EI}$$

$$|t_{C/A}| = \left(L - \frac{2}{3}a\right)\left[\frac{1}{2}\left(\frac{P(L-a)}{EI}\right)(a)\right] + \frac{2(L-a)}{3}\left[\frac{1}{2}\left(\frac{P(L-a)}{EI}\right)(L-a)\right]$$

$$= \frac{P(L-a)\left(2L^2 - aL\right)}{6EI}$$

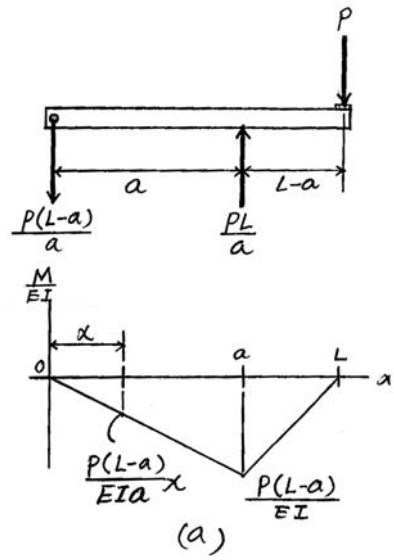

From the geometry shown in Fig. *b*,

$$\Delta_C = |t_{C/A}| - \frac{|t_{B/A}|}{a}L$$

$$= \frac{PL(L-a)\left(2L-a\right)}{6EI} - \frac{Pa^2(L-a)}{6EI}\left(\frac{L}{a}\right)$$

$$= \frac{PL(L-a)^2}{3EI}$$

$$\theta_A = \frac{|t_{B/A}|}{a} = \frac{\dfrac{Pa^2(L-a)}{6EI}}{a} = \frac{Pa(L-a)}{6EI}$$

The maximum deflection in region AB occurs at point D, where the slope of the elastic curve is zero ($\theta_D = 0$).

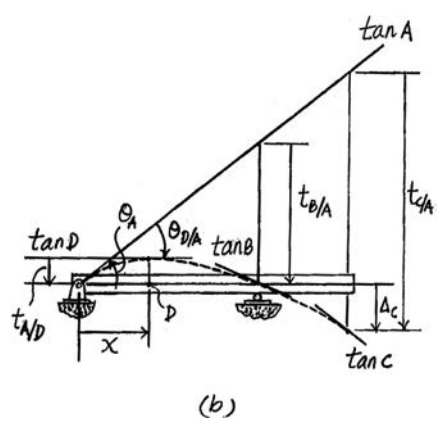

Thus,

$$|\theta_{D/A}| = \theta_A$$

$$\frac{1}{2}\left[\frac{P(L-a)}{EIa}x\right](x) = \frac{Pa(L-a)}{6EI}$$

$$x = \frac{\sqrt{3}}{3}a$$

Also,

$$\Delta_D = |t_{4/D}| = \left(\frac{2\sqrt{3}}{9}a\right)\left[\frac{1}{2}\left[\frac{P(L-a)}{EIa}\left(\frac{\sqrt{3}}{3}a\right)\right]\right]\left(\frac{\sqrt{3}}{3}a\right) = \frac{\sqrt{3}Pa^2(L-a)}{27EI}$$

It is required that

$$\Delta_C = \Delta_D$$

$$\frac{PL(L-a)^2}{3EI} = \frac{\sqrt{3}Pa^2(L-a)}{27EI}$$

$$\frac{\sqrt{3}}{9}a^2 + La - L^2 = 0$$

Solving for the positive root,

$$a = 0.858L \qquad \textbf{Ans.}$$

Ans:
$a = 0.858\,L$

12–62. The flat spring is made of A-36 steel and has a rectangular cross section as shown. Determine the maximum elastic load P that can be applied. What is the deflection at B when P reaches its maximum value? Assume that the spring is fixed supported at A.

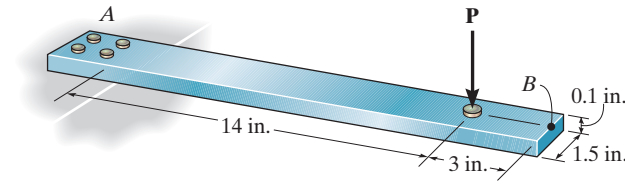

$$I = \frac{1}{12}(1.5)(0.1)^3 = 0.125(10^{-3})\ \text{in}^4$$

$$\sigma_y = \frac{Mc}{I}; \qquad 36(10^3) = \frac{14P(0.05)}{0.125(10^{-3})} \qquad P = 6.43\ \text{lb} \qquad \textbf{Ans.}$$

$$\Delta_B = t_{B/A} = \frac{1}{2}\left(\frac{-90}{EI}\right)(14)(9.333 + 3)$$

$$= \frac{-7770}{EI} = \frac{-7770}{29(10^6)(0.125)(10^{-3})} = 2.14\ \text{in.} \qquad \textbf{Ans.}$$

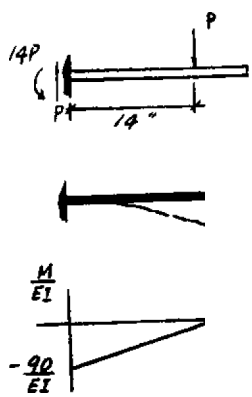

Ans:
$P = 6.43$ lb, $\Delta_B = 2.14$ in.$\downarrow$

12–63. Determine the slope and the deflection of end B of the cantilever beam. EI is constant.

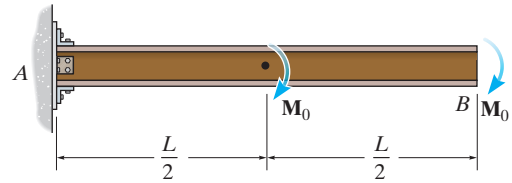

Support Reactions and $\frac{M}{EI}$ Diagram. As shown in Fig. *a*.

Moment Area Theorem. Since A is a fixed support, $\theta_A = 0$. Referring to the geometry of the elastic curve, Fig. *b*,

$$\theta_B = \theta_{B/A} = -\frac{2M_O}{EI}\left(\frac{L}{2}\right) + \left(-\frac{M_O}{EI}\right)\left(\frac{L}{2}\right)$$

$$= -\frac{3M_O L}{2EI} \qquad \textbf{Ans.}$$

$$\Delta_B = |t_{B/A}| = \frac{3L}{2}\left[\frac{2M_O}{EI}\left(\frac{L}{2}\right)\right] + \frac{L}{4}\left[\frac{M_O}{EI}\left(\frac{L}{2}\right)\right]$$

$$= \frac{7M_O L^2}{8EI}\downarrow \qquad \textbf{Ans.}$$

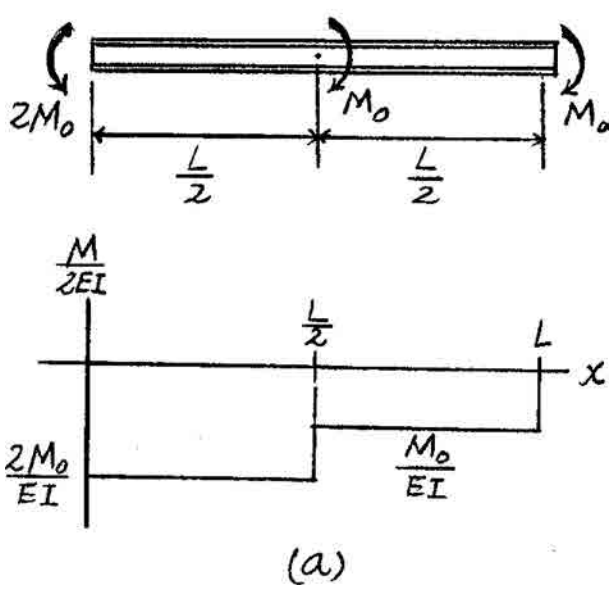

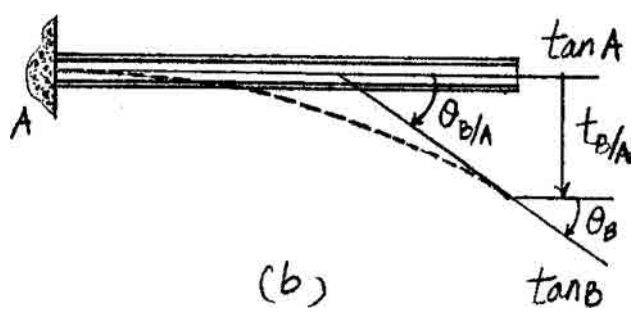

Ans:
$\theta_B = -\frac{3M_0 L}{2EI}$, $\Delta_B = \frac{7M_0 L^2}{8EI}\downarrow$

***12–64.** The beam is subjected to the loading shown. Determine the slope at B and deflection at C. EI is constant.

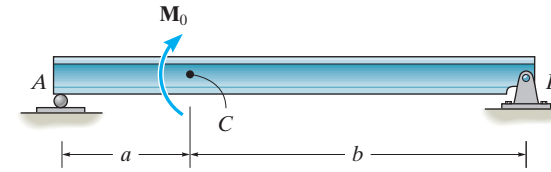

The slope:

$$t_{A/B} = \frac{1}{2}\left[\frac{-M_0 a}{EI(a+b)}\right](a)\left(\frac{2}{3}a\right) + \frac{1}{2}\left[\frac{M_0 b}{EI(a+b)}\right](b)\left(a + \frac{b}{3}\right)$$

$$= \frac{M_0(b^3 + 3ab^2 - 2a^3)}{6EI(a+b)}$$

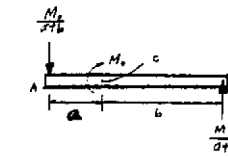

$$\theta_B = \frac{t_{A/B}}{a+b} = \frac{M_0(b^3 + 3ab^2 - 2a^3)}{6EI(a+b)^2}$$ **Ans.**

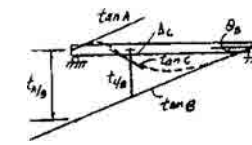

The deflection:

$$t_{C/B} = \frac{1}{2}\left[\frac{M_0 b}{EI(a+b)}\right](b)\left(\frac{b}{3}\right) = \frac{M_0 b^3}{6EI(a+b)}$$

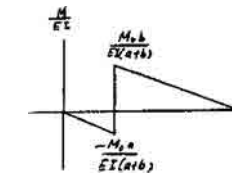

$$\Delta_C = \left(\frac{b}{a+b}\right)t_{A/B} - t_{C/B}$$

$$= \frac{M_0 b(b^3 + 3ab^2 - 2a^3)}{6EI(a+b)^2} - \frac{M_0 b^3}{6EI(a+b)}$$

$$= \frac{M_0 a\, b(b-a)}{3EI(a+b)}$$ **Ans.**

12–65. The beam is subjected to the loading shown. Determine the slope at A and the displacement at C. Assume the support at A is a pin and B is a roller. EI is constant.

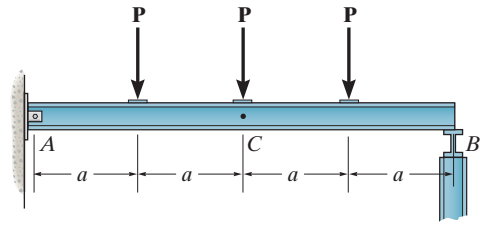

Support Reactions and Elastic Curve: As shown.

M/EI Diagram: As shown.

Moment - Area Theorems: Due to symmetry, the slope at midspan (point C) is zero. Hence the slope at A is

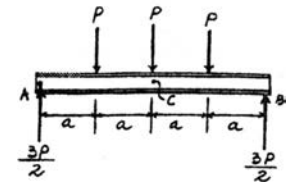

$$\theta_A = \theta_{A/C} = \frac{1}{2}\left(\frac{3Pa}{2EI}\right)(a) + \left(\frac{3Pa}{2EI}\right)(a) + \frac{1}{2}\left(\frac{Pa}{2EI}\right)(a)$$

$$= \frac{5Pa^2}{2EI} \qquad \textbf{Ans.}$$

The displacement at C is

$$\Delta_C = t_{A/C} = \frac{1}{2}\left(\frac{3Pa}{2EI}\right)(a)\left(\frac{2a}{3}\right) + \left(\frac{3Pa}{2EI}\right)\left(a + \frac{a}{2}\right) + \frac{1}{2}\left(\frac{Pa}{2EI}\right)(a)\left(a + \frac{2a}{3}\right)$$

$$= \frac{19Pa^3}{6EI} \downarrow \qquad \textbf{Ans.}$$

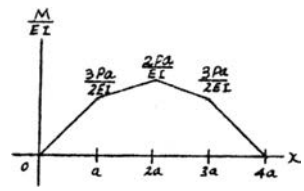

Ans:
$\theta_A = -\dfrac{5Pa^2}{2EI}, \Delta_C = \dfrac{19Pa^3}{6EI}\downarrow$

12–66. The shaft supports the gear at its end C. Determine the deflection at C and the slopes at the bearings A and B. EI is constant. The bearings exert only vertical reactions on the shaft.

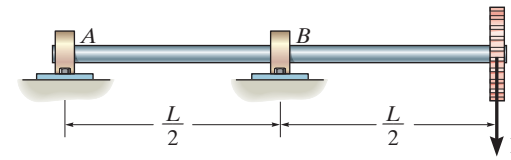

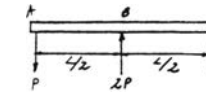

$$t_{B/A} = \frac{1}{2}\left(\frac{-PL}{2EI}\right)\left(\frac{L}{2}\right)\left(\frac{L}{6}\right) = \frac{-PL^3}{48EI}$$

$$t_{C/A} = \frac{1}{2}\left(\frac{-PL}{2EI}\right)(L)\left(\frac{L}{2}\right) = \frac{-PL^3}{8EI}$$

$$\Delta_C = |t_{C/A}| - \left(\frac{L}{\frac{L}{2}}\right)|t_{B/A}|$$

$$= \frac{PL^3}{8EI} - 2\left(\frac{PL^3}{48EI}\right) = \frac{PL^3}{12EI}$$ **Ans.**

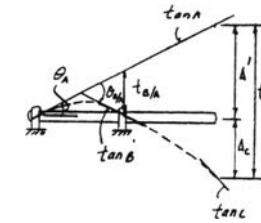

$$\theta_A = \frac{|t_{B/A}|}{\frac{L}{2}} = \frac{\frac{PL^3}{48\,EI}}{\frac{L}{2}} = \frac{PL^2}{24EI}$$ **Ans.**

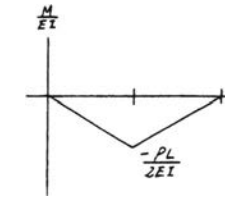

$$\theta_{B/A} = \frac{1}{2}\left(\frac{-PL}{2EI}\right)\left(\frac{L}{2}\right) = \frac{-PL^2}{8EI}$$

$$\theta_B = \theta_{B/A} + \theta_A$$

$$\theta_B = -\frac{PL^2}{8EI} + \frac{PL^2}{24EI} = -\frac{PL^2}{12EI}$$ **Ans.**

Ans:

$$\Delta_C = -\frac{PL^3}{12EI}, \theta_A = \frac{PL^2}{24EI}, \theta_B = -\frac{PL^2}{12EI}$$

12–67. The shaft supports the gear at its end C. Determine its maximum deflection within region AB. EI is constant. The bearings exert only vertical reactions on the shaft.

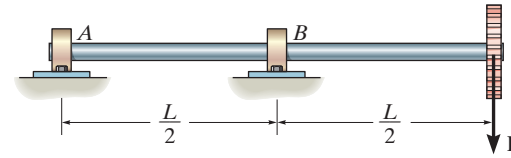

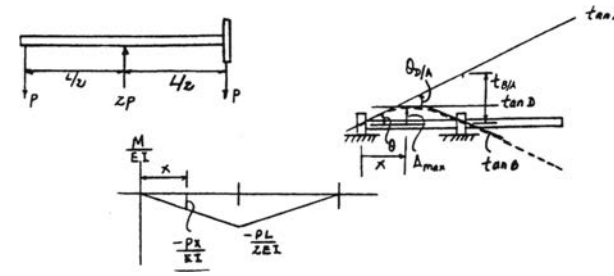

$$\theta_{D/A} = \frac{t_{B/A}}{\left(\frac{L}{2}\right)}$$

$$\frac{1}{2}\left(\frac{Px}{EI}\right)x = \frac{\frac{1}{2}\left(\frac{L}{2}\right)\left(\frac{PL}{2EI}\right)\left(\frac{1}{3}\right)\left(\frac{L}{2}\right)}{\left(\frac{L}{2}\right)}; \qquad x = 0.288675\,L$$

$$\Delta_{\max} = \frac{1}{2}\left(\frac{P(0.288675\,L)}{E\,I}\right)(0.288675\,L)\left(\frac{2}{3}\right)(0.288675\,L)$$

$$\Delta_{\max} = \frac{0.00802PL^3}{EI}$$ **Ans.**

Ans:

$$\Delta_{\max} = \frac{0.00802PL^3}{EI}$$

***12–68.** Determine the slope at A and the maximum deflection of the simply supported beam. EI is constant.

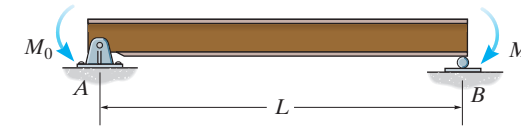

Support Reactions and $\frac{M}{EI}$ Diagram. As shown in Fig. *a*.

Moment Area Theorem. Due to symmetry, the slope at the midspan of the beam, i.e., point C is zero ($\theta_C = 0$). Thus, the maximum deflection of the beam occurs here. Referring to the geometry of the elastic curve, Fig. *b*,

$$\theta_A = |\theta_{A/C}| = \frac{M_O}{EI}\left(\frac{L}{2}\right) = \frac{M_O L}{2EI} \qquad \textbf{Ans.}$$

$$\Delta_{\max} = \Delta_C = |t_{A/C}| = \frac{L}{4}\left[\frac{M_O}{EI}\left(\frac{L}{2}\right)\right]$$

$$= \frac{M_O L^2}{8EI} \uparrow \qquad \textbf{Ans.}$$

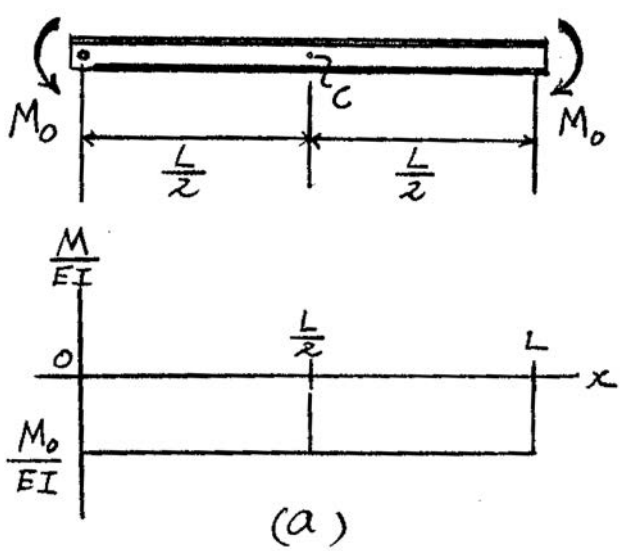

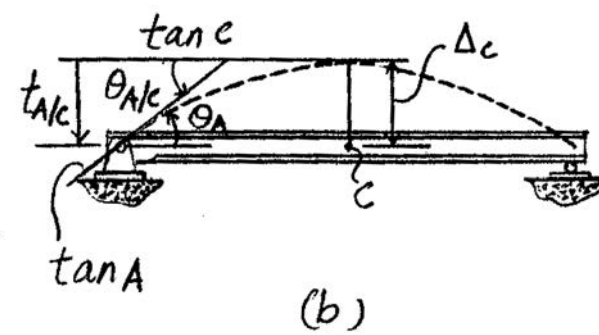

12–69. Determine the slope at C and the deflection at B. EI is constant.

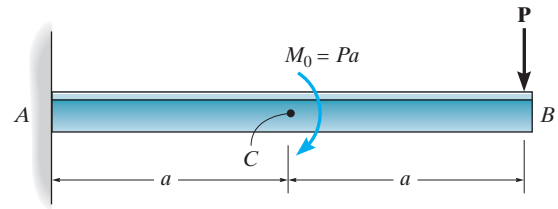

$$\theta_{C/A} = \left(-\frac{2Pa}{EI}\right)(a) + \frac{1}{2}\left(-\frac{Pa}{EI}\right)(a)$$

$$= -\frac{5Pa^2}{2EI} = \frac{5Pa^2}{2EI}\circlearrowleft$$

$$\theta_C = \theta_{C/A}$$

$$\circlearrowleft + \theta_C = +\frac{5Pa^2}{2EI} \qquad \circlearrowleft$$

$$\Delta_B = |t_{B/A}| = \frac{1}{2}\left(-\frac{Pa}{EI}\right)(a)\left(\frac{2a}{3}\right) + \frac{1}{2}\left(-\frac{Pa}{EI}\right)(a)\left(a + \frac{2a}{3}\right) + \left(-\frac{2Pa}{EI}\right)(a)\left(a + \frac{a}{2}\right)$$

$$= \frac{25Pa^3}{6EI}\downarrow$$ **Ans.**

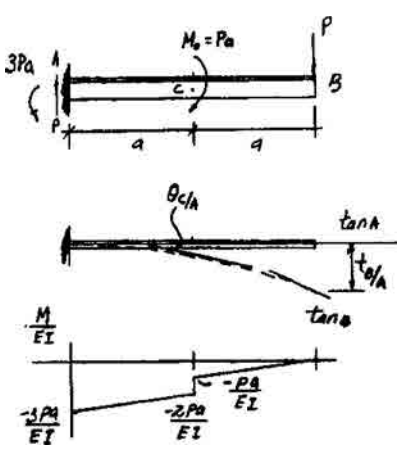

Ans:
$\theta_C = -\frac{5Pa^2}{2EI}$, $\Delta_B = \frac{25Pa^3}{6EI}\downarrow$

12–70. Determine the slope at A and the maximum deflection in the beam. EI is constant.

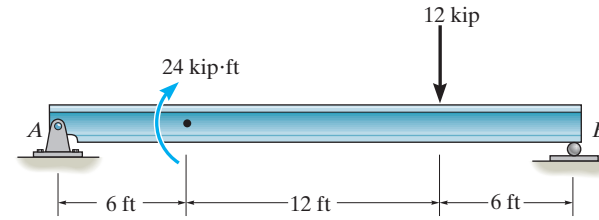

Here,

$$t_{B/A} = 20\left[\frac{1}{2}\left(\frac{12}{EI}\right)(6)\right] + 12\left[\frac{36}{EI}(12)\right] + 10\left[\frac{1}{2}\left(\frac{24}{EI}\right)(12)\right] + 4\left[\frac{1}{2}\left(\frac{60}{EI}\right)(6)\right]$$

$$= \frac{8064\ \text{kip}\cdot\text{ft}^3}{EI}$$

From the geometry of the elastic curve diagram, Fig. b,

$$\theta_A = -\frac{t_{B/A}}{L} = -\frac{8064/EI}{24} = -\frac{336\ \text{kip}\cdot\text{ft}^2}{EI} \qquad \textbf{Ans.}$$

Assuming that the zero slope of the elastic curve occurs in the region $6\ \text{ft} < x = 18\ \text{ft}$ such as point C where the maximum deflection occurs, then

$$\theta_{C/A} = -\theta_A$$

$$\frac{1}{2}\left(\frac{12}{EI}\right)(6) + \left(\frac{36}{EI}\right)x + \frac{1}{2}\left(\frac{2x}{EI}\right)(x) = \frac{336}{EI}$$

$$x^2 + 36x - 300 = 0$$

Solving for the root $0 < x < 12$ ft,

$$x = 6.980\ \text{ft O.K.}$$

Thus,

$$v_{\max} = t_{A/C} = 4\left[\frac{1}{2}\left(\frac{12}{EI}\right)(6)\right] + 9.490\left[\frac{36}{EI}(6.980)\right] + 10.653\left[\frac{1}{2}(13.960)(6.980)\right]$$

$$= \frac{3048\ \text{kip}\cdot\text{ft}^3}{EI}\downarrow \qquad \textbf{Ans.}$$

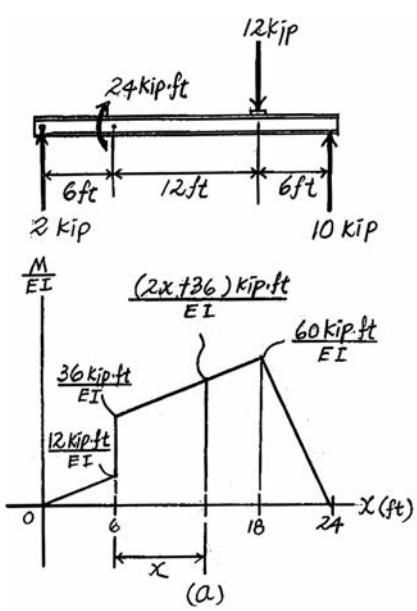

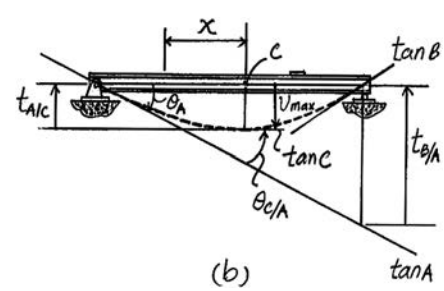

Ans:

$$\theta_A = -\frac{336\ \text{kip}\cdot\text{ft}^2}{EI},\ v_{\max} = \frac{3048\ \text{kip}\cdot\text{ft}^3}{EI}\downarrow$$

12–71. The beam is made of a ceramic material. In order to obtain its modulus of elasticity, it is subjected to the loading shown. If the moment of inertia is I and the beam has a measured maximum deflection Δ, determine E. The supports at A and D exert only vertical reactions on the beam.

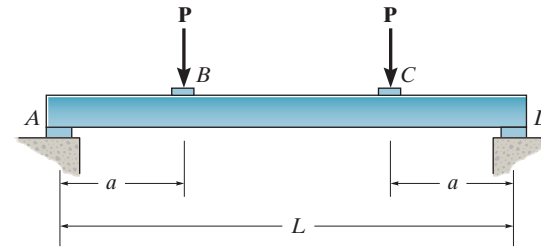

Moment-Area Theorems: Due to symmetry, the slope at midspan (point E) is zero. Hence the maximum displacement is,

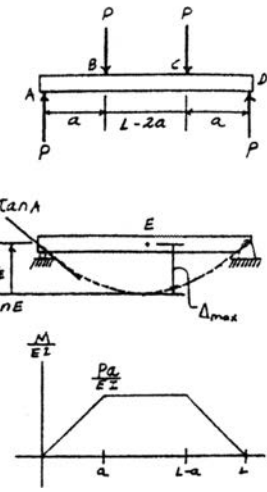

$$\Delta_{\max} = t_{A/E} = \left(\frac{Pa}{EI}\right)\left(\frac{L-2a}{2}\right)\left(a + \frac{L-2a}{4}\right) + \frac{1}{2}\left(\frac{Pa}{EI}\right)(a)\left(\frac{2}{3}a\right)$$

$$= \frac{Pa}{24EI}\left(3L^2 - 4a^2\right)$$

Require, $\Delta_{\max} = \Delta$, then,

$$\Delta = \frac{Pa}{24EI}\left(3L^2 - 4a^2\right)$$

$$E = \frac{Pa}{24I\Delta}\left(3L^2 - 4a^2\right) \qquad \textbf{Ans.}$$

Ans:

$$E = \frac{Pa}{24I\Delta}(3L^2 - 4a^2)$$

***12–72.** A beam having a constant EI is supported as shown. Attached to the beam at A is a pointer, free of load. Both the beam and pointer are originally horizontal when no load is applied to the beam. Determine the distance between the end of the beam and the pointer after each has been displaced by the loading shown.

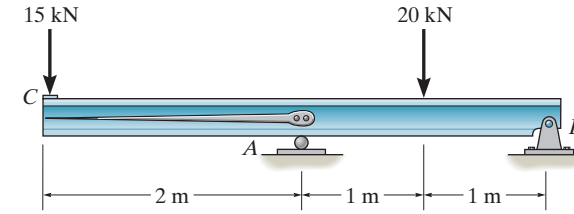

Determine $t_{C/A}$

$$t_{C/A} = \frac{1}{2}\left(\frac{30}{EI}\right)(2)\left(\frac{2}{3}\right)(2)$$

$$t_{C/A} = \frac{40}{EI}$$ **Ans.**

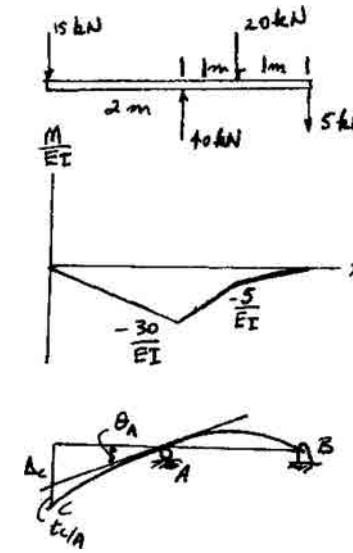

12–73. Determine the slope at A and the maximum deflection of the shaft. EI is constant.

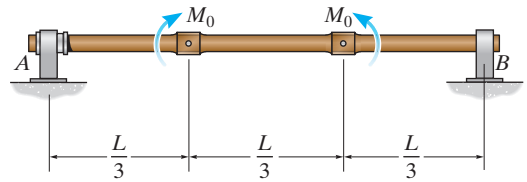

Support Reactions and $\frac{M}{EI}$ Diagram. As shown in Fig. *a*.

Moment Area Theorem. Due to symmetry, the slope at the midspan of the shaft, i.e., point C is zero ($\theta_C = 0$). Thus, the maximum deflection of the beam occurs here. Referring to the geometry of the elastic curve, Fig. *b*,

$$\theta_A = |\theta_{A/C}| = \frac{M_0}{EI}\left(\frac{L}{6}\right) = \frac{M_0 L}{6EI} \qquad \textbf{Ans.}$$

$$\Delta_{\max} = \Delta_C = |t_{A/C}| = \left(\frac{5}{12}L\right)\left[\frac{M_0}{EI}\left(\frac{L}{6}\right)\right]$$

$$= \frac{5M_0L^2}{72\,EI} \downarrow \qquad \textbf{Ans.}$$

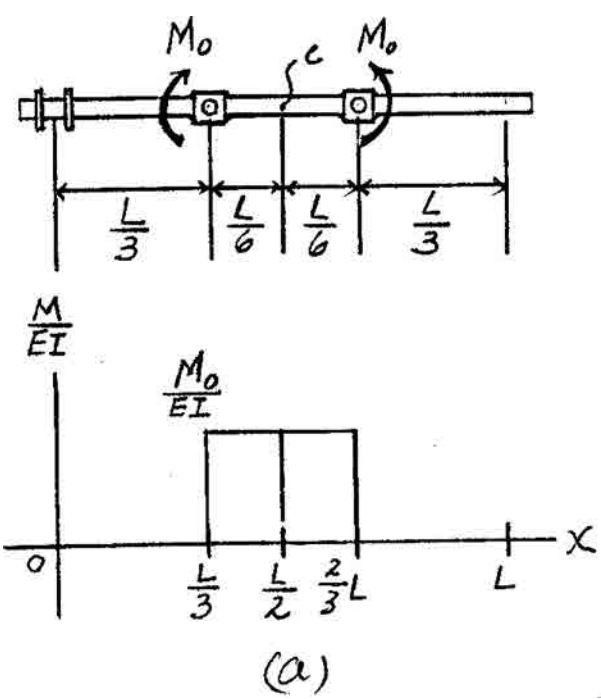

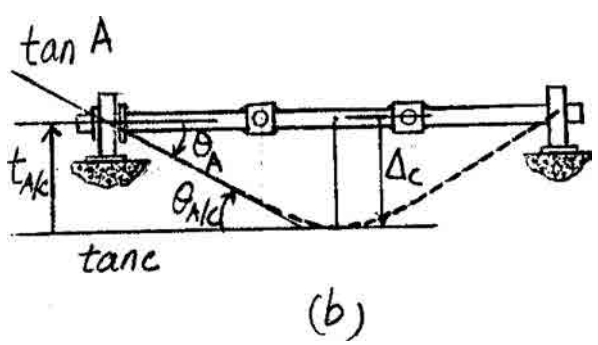

Ans:

$$\theta_A = -\frac{M_0L}{6EI},\ \Delta_{\max} = \frac{5M_0L^2}{72EI}\downarrow$$

12–74. The rod is constructed from two shafts for which the moment of inertia of AB is I and of BC is $2I$. Determine the maximum slope and deflection of the rod due to the loading. The modulus of elasticity is E.

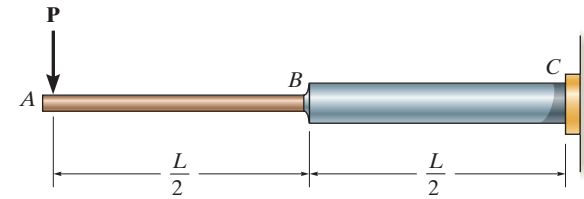

$$\theta_{A/C} = \frac{1}{2}\left(\frac{-PL}{2EI}\right)\left(\frac{L}{2}\right) + \frac{1}{2}\left(\frac{-PL}{4EI}\right)\left(\frac{L}{2}\right) + \left(\frac{-PL}{4EI}\right)\left(\frac{L}{2}\right) = \frac{-5PL^2}{16EI} = \frac{5PL^2}{16EI}$$

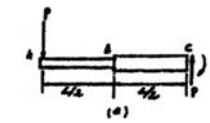

$$\theta_A = \theta_{A/C} + \theta_C$$

$$\theta_{\max} = \theta_A = \frac{5PL^2}{16EI} + 0 = \frac{5PL^2}{16EI}$$ **Ans.**

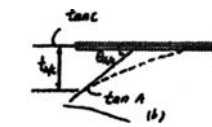

$$\Delta_{\max} = \Delta_A = |t_{A/C}|$$

$$= \left|\frac{1}{2}\left(\frac{-PL}{2\,EI}\right)\left(\frac{L}{2}\right)\left(\frac{L}{3}\right) + \frac{1}{2}\left(\frac{-PL}{4EI}\right)\left(\frac{L}{2}\right)\left(\frac{L}{2} + \frac{L}{3}\right) + \left(\frac{-PL}{4EI}\right)\left(\frac{L}{2}\right)\left(\frac{L}{2} + \frac{L}{4}\right)\right|$$

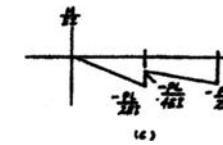

$$= \frac{3PL^3}{16EI}\downarrow$$ **Ans.**

Ans:
$\theta_{\max} = \dfrac{5PL^2}{16EI}$, $\Delta_{\max} = \dfrac{3PL^3}{16EI}\downarrow$

12–75. Determine the slope at B and the deflection at C of the beam. $E = 200$ GPa and $I = 65.0(10^6)\ \text{mm}^4$.

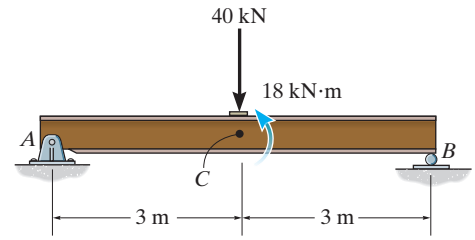

Support Reactions and $\frac{M}{EI}$ Diagram. As shown in Fig. *a*.

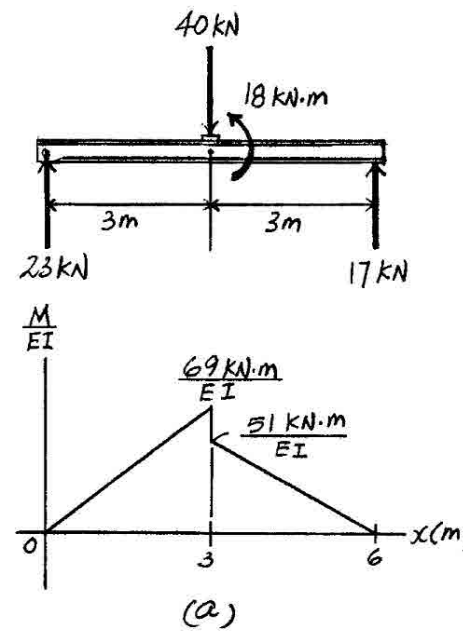

Moment Area Theorem. Referring to Fig. *b*,

$$|t_{C/B}| = \left[\frac{1}{3}(3)\right]\left[\frac{1}{2}\left(\frac{51}{EI}\right)(3)\right]$$

$$= \frac{76.5\ \text{kN}\cdot\text{m}^3}{EI}$$

$$|t_{A/B}| = \left[\frac{1}{3}(3) + 3\right]\left[\frac{1}{2}\left(\frac{51}{EI}\right)(3)\right] + \left[\frac{2}{3}(3)\right]\left[\frac{1}{2}\left(\frac{69}{EI}\right)(3)\right]$$

$$= \frac{513\ \text{kN}\cdot\text{m}^3}{EI}$$

From the geometry of the elastic curve, Fig. *b*,

$$\theta_B = \frac{|t_{A/B}|}{L} = \frac{513/EI}{6} = \frac{85.5\ \text{kN}\cdot\text{m}^2}{EI}$$

$$= \frac{85.5(10^3)}{200(10^9)[65.0(10^{-6})]} = 0.00658\ \text{rad}$$ **Ans.**

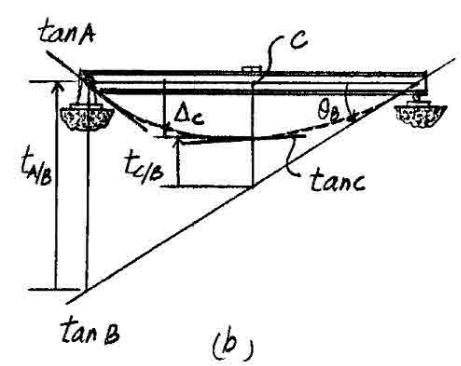

and

$$\Delta_C = |t_{A/B}|\left(\frac{L_{BC}}{L}\right) - |t_{C/B}|$$

$$= \frac{513}{EI}\left(\frac{3}{6}\right) - \frac{76.5}{EI}$$

$$= \frac{180\ \text{kN}\cdot\text{m}^3}{EI} = \frac{180(10^3)}{200(10^9)[65.0(10^{-6})]}$$

$$= 0.0138\ \text{m} = 13.8\ \text{mm} \downarrow$$ **Ans.**

Ans:
$\theta_B = 0.00658$ rad, $\Delta_C = 13.8$ mm$\downarrow$

***12–76.** Determine the slope at point A and the maximum deflection of the simply supported beam. The beam is made of material having a modulus of elasticity E. The moment of inertia of segments AB and CD of the beam is I, while the moment of inertia of segment BC is $2I$.

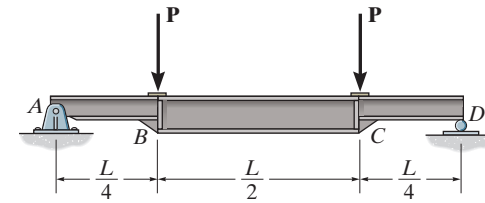

Support Reactions and $\frac{M}{EI}$ Diagram. As shown in Fig. *a*.

Moment Area Theorem. Due to symmetry, the slope at the midspan of the beam, i.e., point E, is zero ($\theta_E = 0$). Thus the maximum deflection occurs here. Referring to the geometry of the elastic curve, Fig. *b*,

$$\theta_A = |\theta_{A/E}| = \frac{1}{2}\left(\frac{PL}{4EI}\right)\left(\frac{L}{4}\right) + \frac{PL}{8EI}\left(\frac{L}{4}\right)$$

$$= \frac{PL^2}{16EI} \quad \searrow \qquad \textbf{Ans.}$$

$$\Delta_{\max} = \Delta_E = |t_{A/E}| = \frac{3}{8}L\left[\frac{PL}{8EI}\left(\frac{L}{4}\right)\right] + \frac{L}{6}\left[\frac{1}{2}\left(\frac{PL}{4EI}\right)\left(\frac{L}{4}\right)\right]$$

$$= \frac{13PL^3}{768EI} \downarrow \qquad \textbf{Ans.}$$

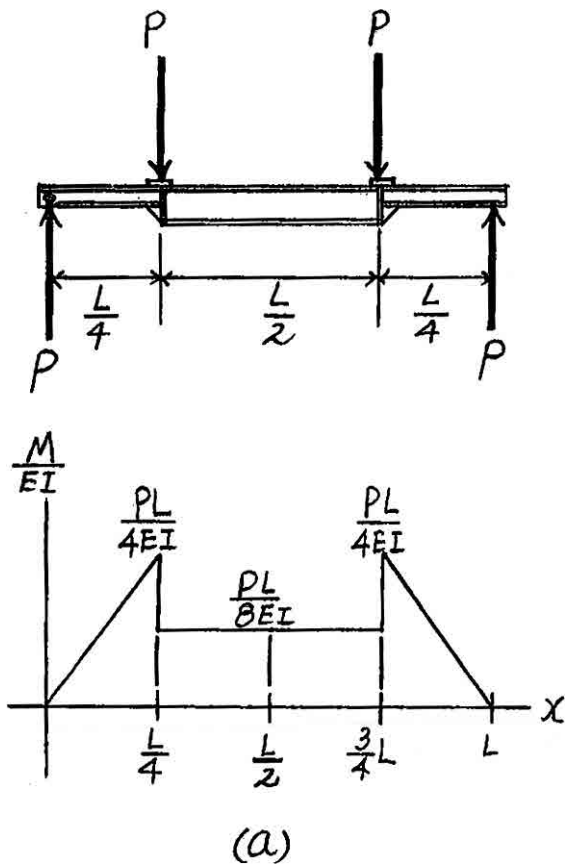

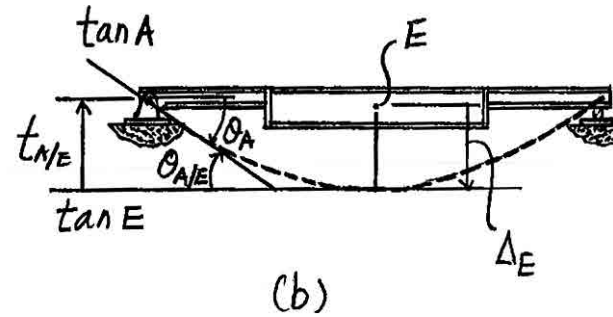

12–77. Determine the position a of roller support B in terms of L so that deflection at end C is the same as the maximum deflection of region AB of the overhang beam. EI is constant.

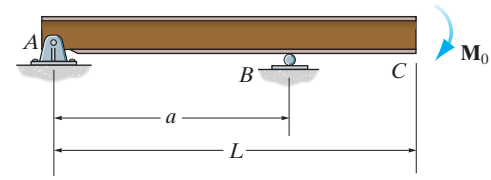

Support Reactions and $\frac{M}{EI}$ Diagram. As shown in Fig. *a*.

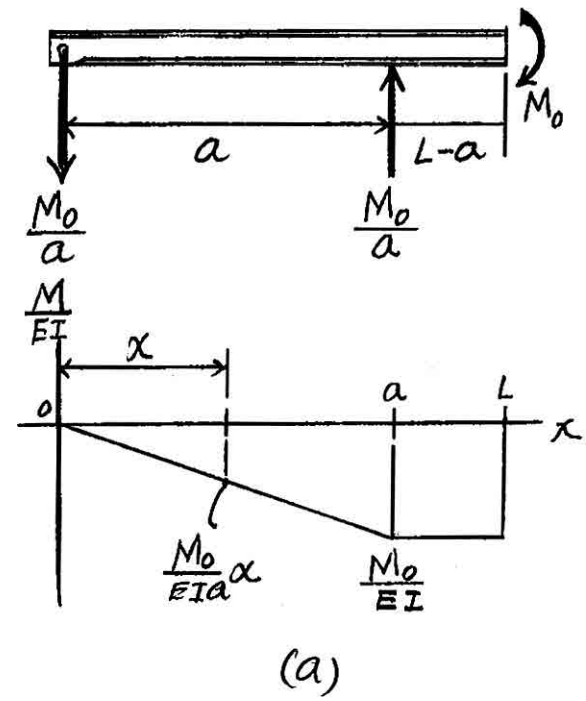

Moment Area Theorem. Referring to Fig. *b*,

$$|t_{B/A}| = \frac{a}{3}\left[\frac{1}{2}\left(\frac{M_O}{EI}\right)(a)\right] = \frac{M_O a^2}{6EI}$$

$$|t_{C/A}| = \left(L - \frac{2}{3}a\right)\left[\frac{1}{2}\left(\frac{M_O}{EI}\right)(a)\right] + \left(\frac{L-a}{2}\right)\left[\frac{M_O}{EI}(L-a)\right]$$

$$= \frac{M_O}{6EI}\left(a^2 + 3L^2 - 3La\right)$$

From the geometry shown in Fig. *b*,

$$\Delta_C = |t_{C/A}| - \frac{|t_{B/A}|}{a}L$$

$$= \frac{M_O}{6EI}\left(a^2 + 3L^2 - 3La\right) - \frac{M_O a^2}{6EI}\left(\frac{L}{a}\right)$$

$$= \frac{M_O}{6EI}\left(a^2 + 3L^2 - 4La\right)$$

$$\theta_A = \frac{|t_{B/A}|}{a} = \frac{\frac{M_O a^2}{6EI}}{a} = \frac{M_O a}{6EI}$$

The maximum deflection in region AB occurs at point D, where the slope of the elastic curve is zero ($\theta_D = 0$).

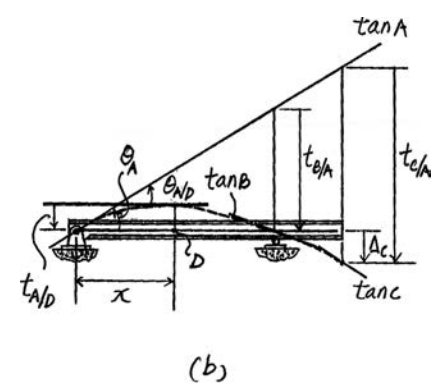

Thus,

$$|\theta_{D/A}| = \theta_A$$

$$\frac{1}{2}\left(\frac{M_O}{EIa}\right)(x)^2 = \frac{M_O a}{6EI}$$

$$x = \frac{\sqrt{3}}{3}a$$

Also,

$$\Delta_D = |t_{A/D}| = \frac{2}{3}\left(\frac{\sqrt{3}}{3}a\right)\left[\frac{1}{2}\left(\frac{M_O}{EIa}\right)\left(\frac{\sqrt{3}}{3}a\right)\right]\left(\frac{\sqrt{3}}{3}a\right) = \frac{\sqrt{3}M_O a^2}{27EI}$$

It is required that

$$\Delta_C = \Delta_D$$

$$\frac{M_O}{6EI}\left(a^2 + 3L^2 - 4La\right) = \frac{\sqrt{3}M_O a^2}{27EI}$$

$$0.6151a^2 - 4La + 3L^2 = 0$$

Solving for the root $< L$,

$$a = 0.865L$$ **Ans.**

Ans:
$a = 0.865\ L$

12–78. The beam is subjected to the loading shown. Determine the slope at B and deflection at C. EI is constant.

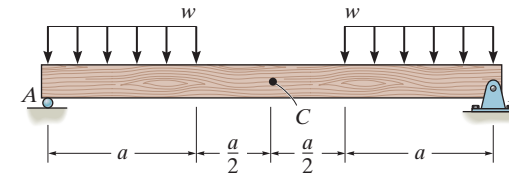

$$\theta_{B/C} = \frac{wa^2}{2EI}\left(\frac{a}{2}\right) + \frac{2}{3}\left(\frac{wa^2}{2EI}\right)(a) = \frac{7wa^3}{12EI}$$

$$\theta_B = \theta_{B/C} = \frac{7wa^3}{12EI}$$ **Ans.**

$$\Delta_C = t_{B/C} = \frac{wa^2}{2EI}\left(\frac{a}{2}\right)\left(a + \frac{a}{4}\right) + \frac{2}{3}\left(\frac{wa^2}{2EI}\right)(a)\left(\frac{5}{8}a\right)$$

$$= \frac{25wa^4}{48EI} \downarrow$$ **Ans.**

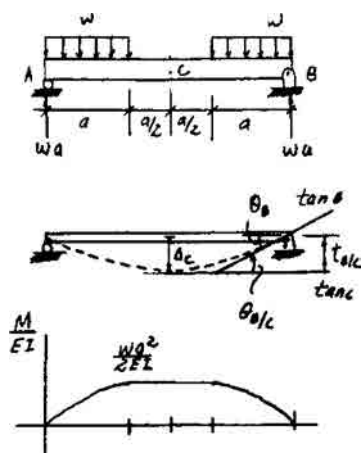

Ans:
$\theta_B = \dfrac{7wa^3}{12EI}$, $\Delta_C = \dfrac{25wa^4}{48EI}\downarrow$

12–79. The cantilevered beam is subjected to the loading shown. Determine the slope and displacement at C. EI is constant.

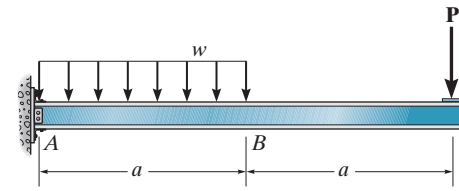

Support Reactions and Elastic Curve: As shown.

M/EI Diagrams: The M/EI diagrams for the uniform distributed load and concentrated load are drawn separately as shown.

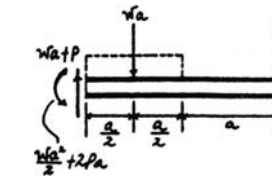

Moment-Area Theorems: The slope at support A is zero. The slope at C is

$$\theta_C = |\theta_{C/A}| = \frac{1}{2}\left(-\frac{2Pa}{EI}\right)(2a) + \frac{1}{3}\left(-\frac{wa^2}{2EI}\right)(a)$$

$$= \frac{a^2}{6EI}(12P + wa) \circlearrowright \qquad \textbf{Ans.}$$

The displacement at C is

$$\Delta_C = |t_{C/A}| = \frac{1}{2}\left(-\frac{2Pa}{EI}\right)(2a)\left(\frac{4}{3}a\right) + \frac{1}{3}\left(-\frac{wa^2}{2EI}\right)(a)\left(a + \frac{3}{4}a\right)$$

$$= \frac{a^3}{24EI}(64P + 7wa) \quad \downarrow \qquad \textbf{Ans.}$$

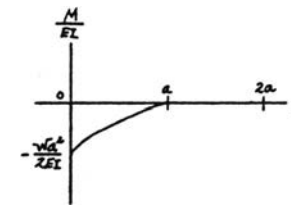

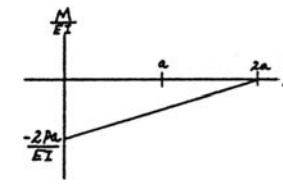

Ans:

$\theta_C = -\dfrac{a^2}{6EI}(12P + wa)$,

$\Delta_C = \dfrac{a^3}{24EI}(64P + 7wa)\downarrow$

***12–80.** Determine the slope at C and deflection at B. EI is constant.

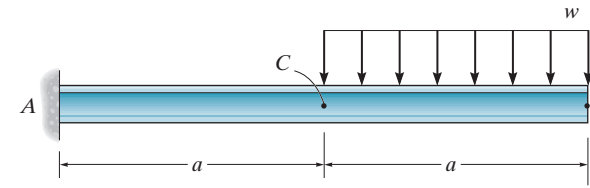

Support Reactions and Elastic Curve: As shown.

M/EI Diagram: As shown.

Moment-Area Theorems: The slope at support A is zero. The slope at C is

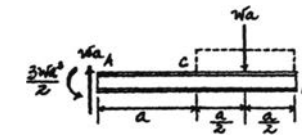

$$\theta_C = |\theta_{C/A}| = \frac{1}{2}\left(-\frac{wa^2}{EI}\right)(a) + \left(-\frac{wa^2}{2EI}\right)(a)$$

$$= \frac{wa^3}{EI} \qquad \textbf{Ans.}$$

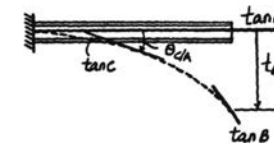

The displacement at B is

$$\Delta_B = |t_{B/A}|$$

$$= \frac{1}{2}\left(-\frac{wa^2}{EI}\right)(a)\left(a + \frac{2}{3}a\right) + \left(-\frac{wa^2}{2EI}\right)(a)\left(a + \frac{a}{2}\right) + \frac{1}{3}\left(-\frac{wa^2}{2EI}\right)(a)\left(\frac{3}{4}a\right)$$

$$= \frac{41wa^4}{24EI} \downarrow \qquad \textbf{Ans.}$$

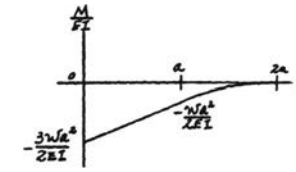

12–81. The two bars are pin connected at D. Determine the slope at A and the deflection at D. EI is constant.

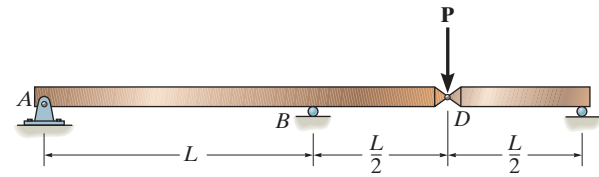

$$t_{B/A} = \frac{1}{2}\left(\frac{-PL}{2EI}\right)(L)\left(\frac{L}{3}\right) = \frac{-PL^3}{12EI}$$

$$\theta_A = \frac{|t_{B/A}|}{L} = \frac{PL^2}{12EI}$$ **Ans.**

The Deflection:

$$t_{D/A} = \frac{1}{2}\left(\frac{-PL}{2EI}\right)(L)\left(\frac{L}{2} + \frac{L}{3}\right) + \frac{1}{2}\left(\frac{-PL}{2EI}\right)\left(\frac{L}{2}\right)\left(\frac{L}{3}\right)$$

$$= -\frac{PL^3}{4EI}$$

$$\Delta_D = |t_{D/A}| - \left(\frac{\frac{3}{2}L}{L}\right)|t_{B/A}|$$

$$= \frac{PL^3}{4EI} - \frac{3}{2}\left(\frac{PL^3}{12EI}\right) = \frac{PL^3}{8EI}$$ **Ans.**

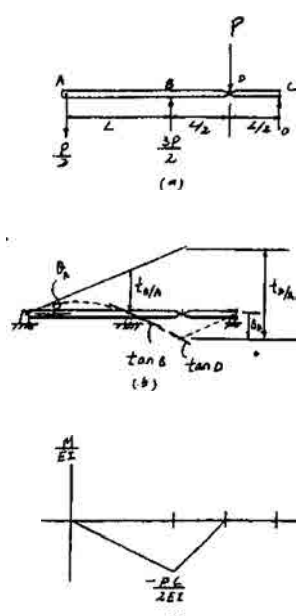

Ans:
$\theta_A = \dfrac{PL^2}{12EI}$, $\Delta_D = \dfrac{PL^3}{8EI}\downarrow$

12–82. Determine the maximum deflection of the beam. EI is constant.

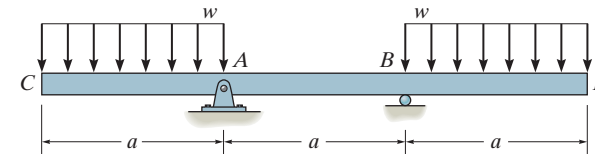

$$t_{B/E} = \left(\frac{-wa^2}{2EI}\right)\left(\frac{a}{2}\right)\left(\frac{a}{4}\right) = \frac{-wa^4}{16EI}$$

$$\Delta_E = |t_{B/E}| = \frac{wa^4}{16EI} \uparrow$$

$$t_{D/E} = \left(\frac{-wa^2}{2EI}\right)\left(\frac{a}{2}\right)\left(a + \frac{a}{4}\right) + \frac{1}{3}\left(\frac{-wa^2}{2EI}\right)(a)\left(\frac{3a}{4}\right) = -\frac{7wa^4}{16EI}$$

$$\Delta_D = |t_{D/E}| - |t_{B/E}| = \frac{7wa^4}{16EI} - \frac{wa^4}{16EI} = \frac{3wa^4}{8EI}$$

$$\Delta_{\max} = \Delta_D = \frac{3wa^4}{8EI}$$ **Ans.**

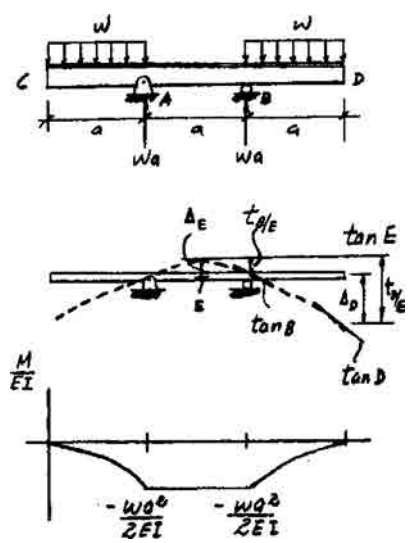

Ans:

$$\Delta_{\max} = \frac{3wa^4}{8EI}$$

12–83. The W10 × 15 cantilevered beam is made of A-36 steel and is subjected to the loading shown. Determine the slope and displacement at its end B.

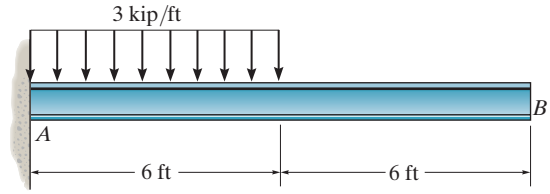

Here,

$$\theta_B = \left|\theta_{B/A}\right| = \frac{1}{3}\left(\frac{54}{EI}\right)(6)$$

$$= -\frac{108\ \text{kip}\cdot\text{ft}^2}{EI}$$

For $W\ 10 \times 15 \quad I = 68.9\ \text{in}^4$, and for A36 steel $E = 29.0\left(10^3\right)$ ksi. Thus

$$\theta_B = -\frac{108\left(12^2\right)}{29\left(10^3\right)(68.9)}$$

$$= -0.00778\ \text{rad}$$ **Ans.**

$$v_B = \left|t_{B/A}\right| = \left[\frac{3}{4}(6) + 6\right]\left[\frac{1}{3}\left(\frac{54}{EI}\right)(6)\right]$$

$$= \frac{1134\ \text{kip}\cdot\text{ft}^3}{EI}$$

$$= \frac{1134\left(12^3\right)}{29\left(10^3\right)(68.9)}$$

$$= 0.981\ \text{in.} \quad \downarrow$$ **Ans.**

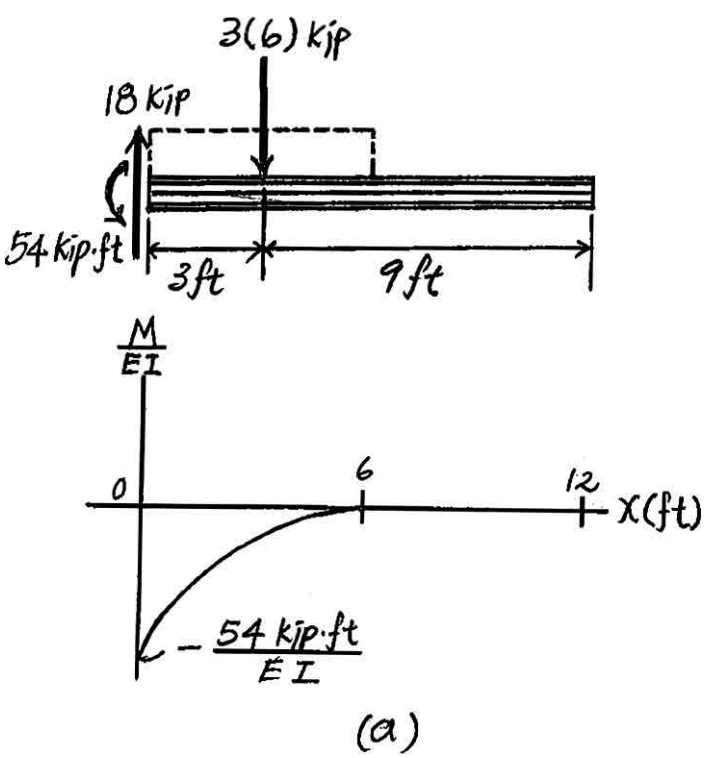

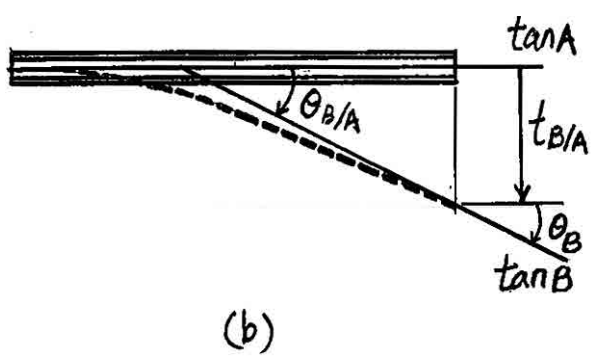

Ans:
$\theta_B = -0.00778$ rad, $v_B = 0.981$ in.$\downarrow$

***12–84.** The W10 × 15 cantilevered beam is made of A-36 steel and is subjected to the loading shown. Determine the displacement at B and the slope at B.

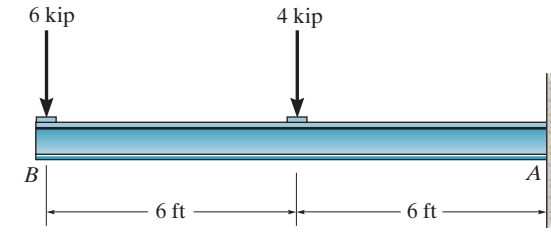

Using the table in the appendix, the required slopes and deflections for each load case are computed as follow:

$$(\Delta_B)_1 = \frac{5PL^3}{48EI} = \frac{5(4)(12^3)}{48EI} = \frac{720\ \text{kip}\cdot\text{ft}^3}{EI} \downarrow$$

$$(\theta_B)_1 = \frac{PL^2}{8EI} = \frac{4(12^2)}{8EI} = \frac{72\ \text{kip}\cdot\text{ft}^2}{EI}$$

$$(\Delta_B)_2 = \frac{PL^3}{3EI} = \frac{6(12^3)}{3EI} = \frac{3456\ \text{kip}\cdot\text{ft}^3}{EI} \downarrow$$

$$(\theta_B)_2 = \frac{PL^2}{2EI} = \frac{6(12^2)}{2EI} = \frac{432\ \text{kip}\cdot\text{ft}^2}{EI}$$

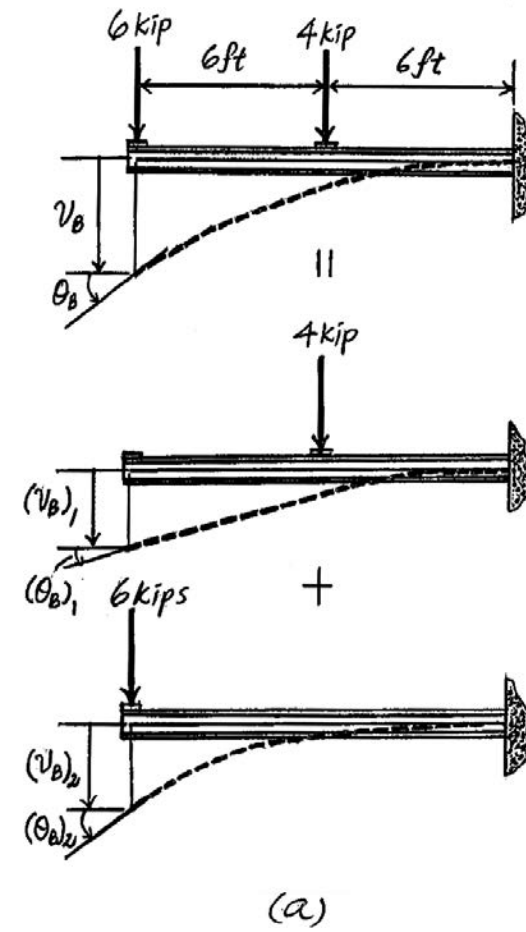

(a)

Then the slope and deflection at B are

$$\theta_B = (\theta_B)_1 + (\theta_B)_2$$

$$= \frac{72}{EI} + \frac{432}{EI}$$

$$= \frac{504\ \text{kip}\cdot\text{ft}^2}{EI}$$

$$\Delta_B = (\Delta_B)_1 + (\Delta_B)_2$$

$$= \frac{720}{EI} + \frac{3456}{EI}$$

$$= \frac{4176\ \text{kip}\cdot\text{ft}^3}{EI}$$

For A36 steel $W10 \times 15$, $I = 68.9\ \text{in}^4$ and $E = 29.0(10^3)$ ksi

$$\theta_B = \frac{504(144)}{29.0(10^3)(68.9)}$$

$$= 0.0363\ \text{rad}$$ **Ans.**

$$\Delta_B = \frac{4176(1728)}{29.0(10^3)(68.9)}$$

$$= 3.61\ \text{in.} \downarrow$$ **Ans.**

12–85. Determine the slope and deflection at end C of the overhang beam. EI is constant.

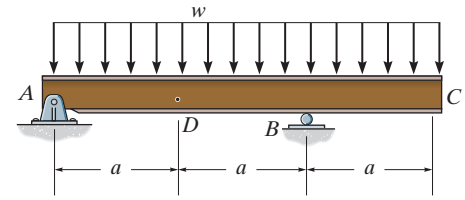

Elastic Curves. The uniform distributed load on the beam is equivalent to the sum of the separate loadings shown in Fig. *a*. The elastic curve for each separate loading is shown Fig. *a*.

Method of Superposition. Using the table in the appendix, the required slopes and deflections are

$$(\theta_C)_1 = (\theta_B)_1 = \frac{wL^3}{24EI} = \frac{w(2a)^3}{24EI} = \frac{wa^3}{3EI}$$

$$(\Delta_C)_1 = (\theta_B)_1(a) = \frac{wa^3}{3EI}(a) = \frac{wa^4}{3EI} \quad \uparrow$$

$$(\theta_C)_2 = \frac{wL^3}{6EI} = \frac{wa^3}{6EI}$$

$$(\Delta_C)_2 = \frac{wL^4}{8EI} = \frac{wa^4}{8EI} \quad \downarrow$$

$$(\theta_C)_3 = (\theta_B)_3 = \frac{M_O L}{3EI} = \frac{\left(\frac{wa^2}{2}\right)(2a)}{3EI} = \frac{wa^3}{3EI}$$

$$(\Delta_C)_3 = (\theta_B)_3\,(a) = \frac{wa^3}{3EI}(a) = \frac{wa^4}{3EI} \quad \downarrow$$

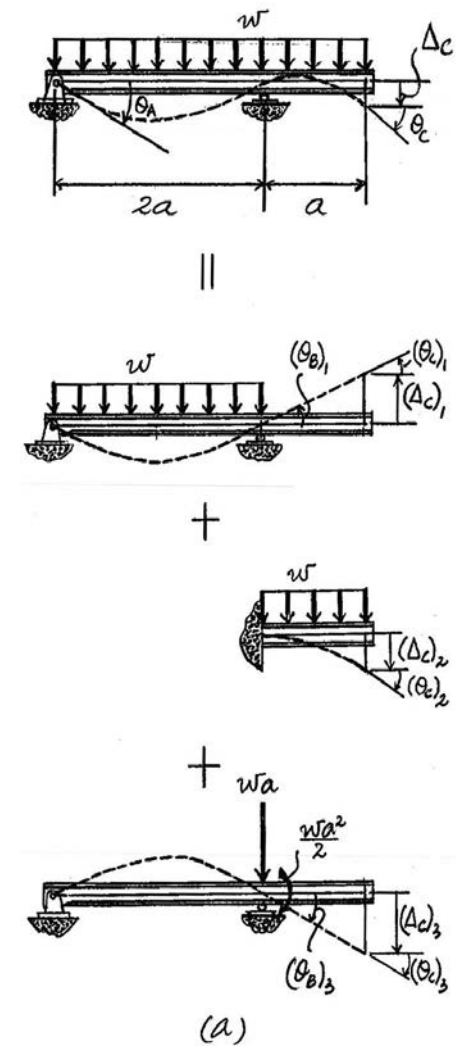

Then the slope and deflection of C are

$$\theta_C = (\theta_C)_1 + (\theta_C)_2 + (\theta_C)_3$$

$$= \frac{wa^3}{3EI} - \frac{wa^3}{6EI} - \frac{wa^3}{3EI}$$

$$= -\frac{wa^3}{6EI} \qquad \textbf{Ans.}$$

$$\Delta_C = (\Delta_C)_1 + (\Delta_C)_2 + (\Delta_C)_3$$

$$= \frac{wa^4}{3EI} - \frac{wa^4}{8EI} - \frac{wa^4}{3EI}$$

$$= \frac{wa^4}{8EI} \downarrow \qquad \textbf{Ans.}$$

Ans:

$$\theta_C = -\frac{wa^3}{6EI}, \Delta_C = \frac{wa^4}{8EI} \downarrow$$

12–86. Determine the slope at A and the deflection at point D of the overhang beam. EI is constant.

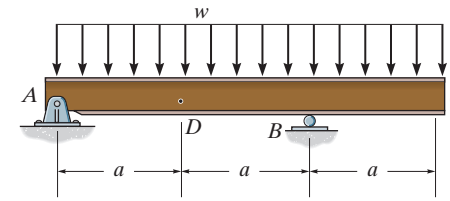

Elastic Curves. The uniform distributed load on the deformation of span AB is equivalent to the sum of the separate loadings shown in Fig. a. The elastic curve for each separate loading is shown in Fig. a.

Method of Superposition. Using the table in the appendix, the required slopes and deflections are

$$(\theta_A)_1 = \frac{wL^3}{24EI} = \frac{w(2a)^3}{24EI} = \frac{wa^3}{3EI}$$

$$(\Delta_D)_1 = \frac{5wL^4}{384EI} = \frac{5w(2a)^4}{384EI} = \frac{5wa^4}{24EI} \quad \downarrow$$

$$(\theta_A)_2 = \frac{M_O L}{6EI} = \frac{\frac{wa^2}{2}(2a)}{6EI} = \frac{wa^3}{6EI}$$

$$(\Delta_D)_2 = \frac{M_O x}{6EIL}\left(L^2 - x^2\right) = \frac{\left(\frac{wa^2}{2}\right)(a)}{6EI(2a)}\left[(2a)^2 - a^2\right]$$

$$= \frac{wa^4}{8EI} \quad \uparrow$$

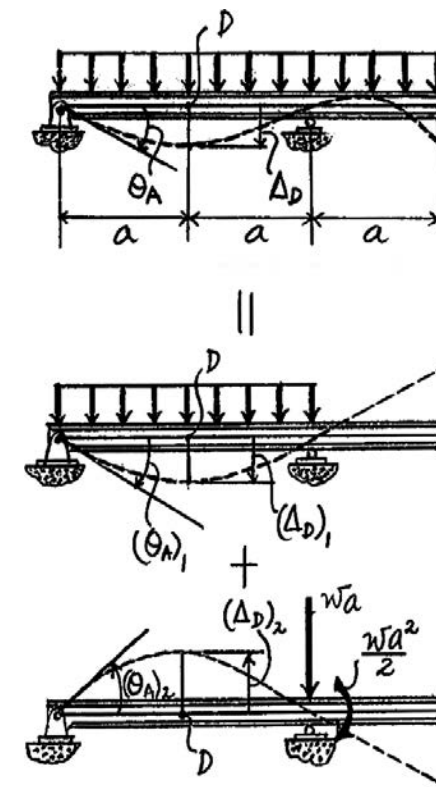

(a)

Then the slope at A and deflection of point D are

$$\theta_A = (\theta_A)_1 + (\theta_A)_2$$

$$= -\frac{wa^3}{3EI} + \frac{wa^3}{6EI} = -\frac{wa^3}{6EI} \qquad \textbf{Ans.}$$

$$\Delta_D = (\Delta_D)_1 + (\Delta_D)_2$$

$$= \frac{5wa^4}{24EI} - \frac{wa^4}{8EI} = \frac{wa^4}{12EI}\downarrow \qquad \textbf{Ans.}$$

Ans:

$$\theta_A = \frac{wa^3}{6EI}, \Delta_D = \frac{wa^4}{12EI}\downarrow$$

12–87. The W12 × 45 simply supported beam is made of A-36 steel and is subjected to the loading shown. Determine the deflection at its center C.

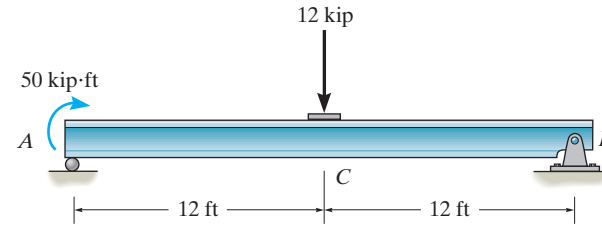

$$(\Delta_C)_1 = \frac{PL^3}{48EI} = \frac{12(24^3)}{48EI} = \frac{3456}{EI} \downarrow$$

$$\Delta_2(x) = \frac{Mx}{6LEI}(L^2 - x^2)$$

At point C, $x = \frac{L}{2}$

$$(\Delta_C)_2 = \frac{M\left(\frac{L}{2}\right)}{6LEI}\left(L^2 - \left(\frac{L}{2}\right)^2\right)$$

$$= \frac{ML^2}{16EI} = \frac{50(24^2)}{16EI} = \frac{1800}{EI} \downarrow$$

$$\Delta_C = (\Delta_C)_1 + (\Delta_C)_2 = \frac{3456}{EI} + \frac{1800}{EI} = \frac{5256}{EI}$$

$$= \frac{5256(1728)}{29(10^3)(350)} = 0.895 \text{ in.} \downarrow$$ **Ans.**

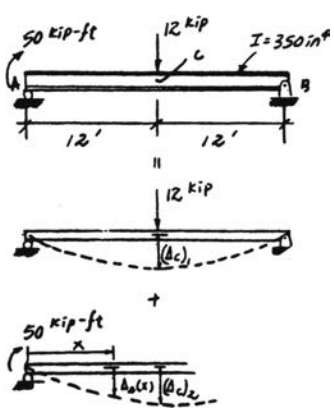

Ans:
$\Delta_C = 0.895$ in.$\downarrow$

***12–88.** Determine the slope at A and the deflection at point C of the simply supported beam. The modulus of elasticity of the wood is $E = 10$ GPa.

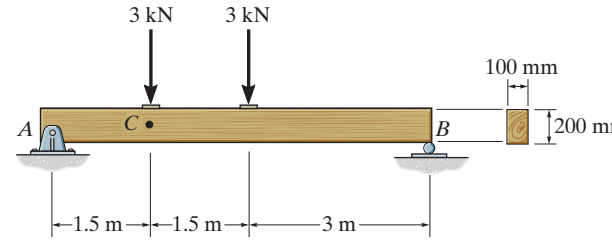

Elastic Curves. The two concentrated forces **P** are applied separately on the beam and the resulting elastic curves are shown in Fig. *a*.

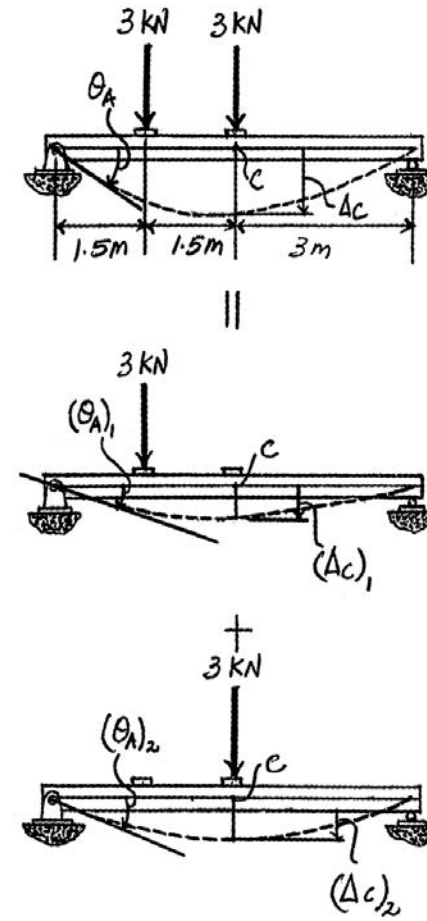

Method of Superposition. Using the table in the appendix, the required slopes and deflections are

$$(\theta_A)_1 = \frac{Pab(L+b)}{6EIL} = \frac{3(1.5)(4.5)(6+4.5)}{6EI(6)} = \frac{5.90625\ \text{kN}\cdot\text{m}^2}{EI}$$

$$(\Delta_C)_1 = \frac{Pbx}{6EIL}\left(L^2 - b^2 - x^2\right) = \frac{3(4.5)(1.5)}{6EI(6)}\left(6^2 - 4.5^2 - 1.5^2\right)$$

$$= \frac{7.594\ \text{kN}\cdot\text{m}^3}{EI} \quad \downarrow$$

$$(\theta_A)_2 = \frac{PL^2}{16EL} = \frac{3\left(6^2\right)}{16EI} = \frac{6.75\ \text{kN}\cdot\text{m}^2}{EI}$$

$$(\Delta_C)_2 = \frac{Px}{48EI}\left(3L^2 - 4x^2\right) = \frac{3(1.5)}{48EI}\left(3(6)^2 - 4(1.5)^2\right) = \frac{9.281}{EI}$$

Then the slope at A and deflection at C are

$$\theta_A = (\theta_A)_1 + (\theta_A)_2$$

$$= \frac{5.90625}{EI} + \frac{6.75}{EI}$$

$$= \frac{12.65625\ \text{kN}\cdot\text{m}^2}{EI} = \frac{12.6525\left(10^3\right)}{10\left(10^9\right)\left[\frac{1}{12}(0.1)\left(0.2^3\right)\right]} = 0.0190\ \text{rad} \quad \text{Ans.}$$

and

$$\Delta_C = (\Delta_C)_1 + (\Delta_C)_2$$

$$= \frac{7.594}{EI} + \frac{9.281}{EI} = \frac{16.88\left(10^3\right)}{10\left(10^9\right)\left[\frac{1}{12}(0.1)\left(0.2^3\right)\right]} = 0.0253\ \text{m} = 25.3\ \text{mm} \quad \text{Ans.}$$

12–89. The W8 × 24 simply supported beam is made of A-36 steel and is subjected to the loading shown. Determine the deflection at its center C.

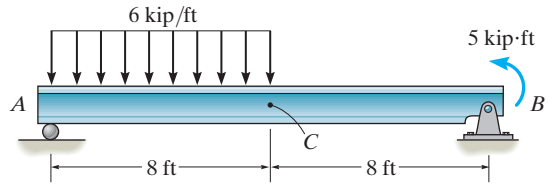

$I = 82.8 \text{ in}^4$

$$(\Delta_C)_1 = \frac{5wL^4}{768EI} = \frac{5(6)\left(16^4\right)}{768EI} = \frac{2560}{EI} \downarrow$$

$$\Delta_2(x) = \frac{Mx}{6LEI}\left(L^2 - x^2\right)$$

At point C, $x = \dfrac{L}{2}$

$$(\Delta_C)_2 = \frac{M\left(\frac{L}{2}\right)}{6LEI}\left(L^2 - \left(\tfrac{L}{2}\right)^2\right)$$

$$= \frac{ML^2}{16EI} = \frac{5\left(16^2\right)}{16EI} = \frac{80}{EI} \quad \downarrow$$

$$\Delta_C = (\Delta_C)_1 + (\Delta_C)_2 = \frac{2560}{EI} + \frac{80}{EI} = \frac{2640}{EI}$$

$$= \frac{2640(1728)}{29\left(10^3\right)(82.8)} = 1.90 \text{ in.} \downarrow$$ **Ans.**

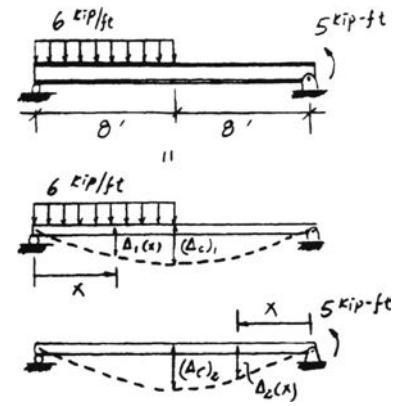

Ans:
$\Delta_C = 1.90 \text{ in.} \downarrow$

12–90. The simply supported beam carries a uniform load of 2 kip/ft. Code restrictions, due to a plaster ceiling, require the maximum deflection not to exceed 1/360 of the span length. Select the lightest-weight A992 steel wide-flange beam from Appendix B that will satisfy this requirement and safely support the load. The allowable bending stress is $\sigma_{\text{allow}} = 24$ ksi and the allowable shear stress is $\tau_{\text{allow}} = 14$ ksi. Assume A is a pin and B a roller support.

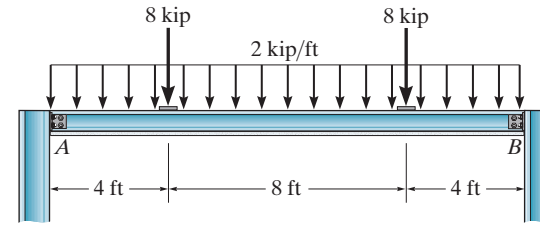

$M_{\max} = 96 \text{ kip} \cdot \text{ft}$

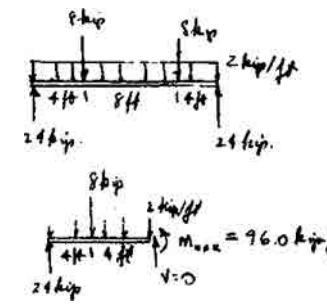

Strength criterion:

$$\sigma_{\text{allow}} = \frac{M}{S_{\text{req'd}}}$$

$$24 = \frac{96(12)}{S_{\text{req'd}}}$$

$$S_{\text{req'd}} = 48 \text{ in}^3$$

Choose $W\,14 \times 34$, $S = 48.6 \text{ in}^3$, $t_w = 0.285$ in., $d = 13.98$ in., $I = 340 \text{ in}^4$

$$\tau_{\text{allow}} = \frac{V}{A_{\text{web}}}$$

$$14 \geq \frac{24}{(13.98)(0.285)} = 6.02 \text{ ksi} \qquad \text{OK}$$

Deflection criterion:

Maximum is at center,

$$v_{\max} = \frac{5wL^4}{384EI} + (2)\frac{P(4)(8)}{6EI(16)}[(16)^2 - (4)^2 - (8)^2](12)^3$$

$$= \left[\frac{5(2)(16)^4}{384EI} + \frac{117.33(8)}{EI}\right](12)^3$$

$$= \frac{4.571(10^6)}{29(10^6)(340)} = 0.000464 \text{ in.} < \frac{1}{360}(16)(12) = 0.533 \text{ in.} \qquad \text{OK}$$

Use $W\,14 \times 34$ **Ans.**

Ans:
Use W14 × 34

12–91. The simply supported beam is made of A-36 steel and is subjected to the loading shown. Determine the deflection at its center C. $I = 0.1457(10^{-3})\ \text{m}^4$.

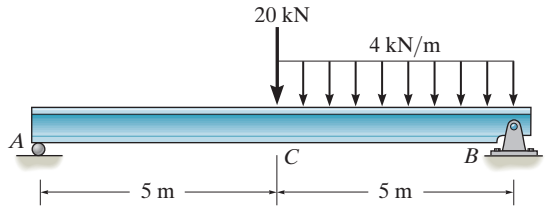

Using the table in Appendix C, the required deflections for each load case are computed as follow:

$$(v_C)_1 = \frac{5wL^4}{768EI} = \frac{5(4)\left(10^4\right)}{768\ EI}$$

$$= \frac{260.42\ \text{kN}\cdot\text{m}^3}{EI} \quad \downarrow$$

$$(v_C)_2 = \frac{PL^3}{48EI} = \frac{20\left(10^3\right)}{48EI} = \frac{416.67\ \text{kN}\cdot\text{m}^3}{EI} \quad \downarrow$$

Then the deflection of point C is

$$v_C = (v_C)_1 + (v_C)_2$$

$$= \frac{260.42}{EI} + \frac{416.67}{EI}$$

$$= \frac{677.08\ \text{kN}\cdot\text{m}^3}{EI} \quad \downarrow$$

$$I = 0.1457\left(10^{-3}\right)\ \text{m}^4$$

and $E = 200$ GPa

$$\Delta_C = \frac{677.08\left(10^3\right)}{200\left(10^9\right)\left[0.1457\left(10^{-3}\right)\right]} = 0.0232\ \text{m} = 23.2\ \text{mm} \downarrow \qquad \textbf{Ans.}$$

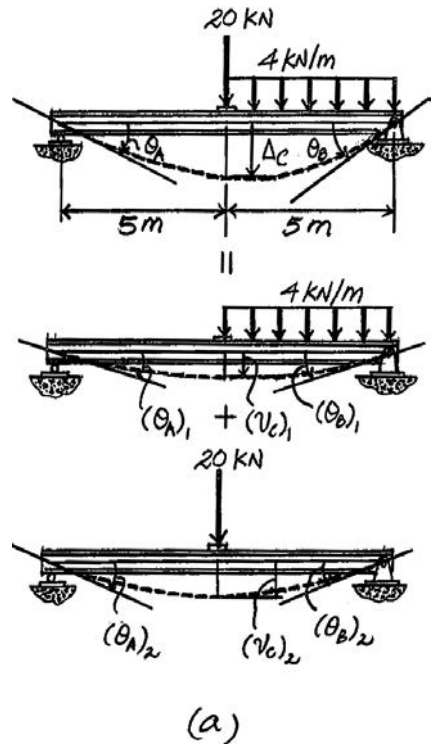

Ans:
$\Delta_C = 23.2\ \text{mm}\downarrow$

***12–92.** The W10 × 30 cantilevered beam is made of A-36 steel and is subjected to unsymmetrical bending caused by the applied moment. Determine the deflection of the centroid at its end A due to the loading. *Hint:* Resolve the moment into components and use superposition.

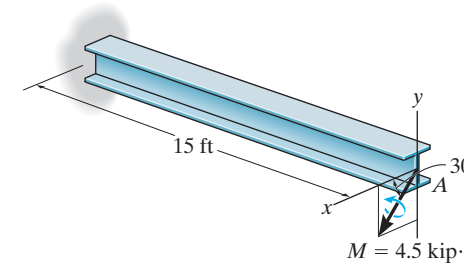

$I_x = 170 \text{ in}^4, \qquad I_y = 16.7 \text{ in}^4$

$$x_{\max} = \frac{(M \sin\theta)L^2}{2EI_y} = \frac{4.5(\sin 30°)(15^2)(12)^3}{2(29)(10^3)(16.7)} = 0.9032 \text{ in.}$$

$$y_{\max} = \frac{(M \cos\theta)L^2}{2EI_x} = \frac{4.5(\cos 30°)(15^2)(12)^3}{2(29)(10^3)(170)} = 0.1537 \text{ in.}$$

$$\Delta_A = \sqrt{0.9032^2 + 0.1537^2} = 0.916 \text{ in.}$$ **Ans.**

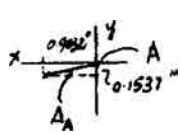

12–93. The rod is pinned at its end A and attached to a torsional spring having a stiffness k, which measures the torque per radian of rotation of the spring. If a force P is always applied perpendicular to the end of the rod, determine the displacement of the force. EI is constant.

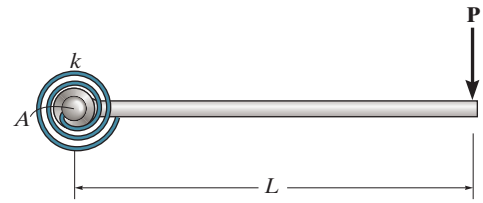

In order to maintain equilibrium, the rod has to rotate through an angle θ.

$$\circlearrowleft + \Sigma M_A = 0; \qquad k\theta - PL = 0; \qquad \theta = \frac{PL}{k}$$

Hence,

$$\Delta' = L\theta = L\left(\frac{PL}{k}\right) = \frac{PL^2}{k}$$

Elastic deformation:

$$\Delta'' = \frac{PL^3}{3EI}$$

Therefore,

$$\Delta = \Delta' + \Delta'' = \frac{PL^2}{k} + \frac{PL^3}{3EI} = PL^2\left(\frac{1}{k} + \frac{L}{3EI}\right)$$ **Ans.**

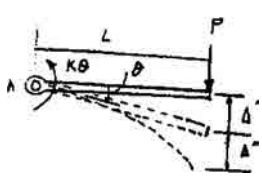

Ans:

$$\Delta = PL^2\left(\frac{1}{k} + \frac{L}{3EI}\right)$$

12–94. Determine the vertical deflection and slope at the end A of the bracket. Assume that the bracket is fixed supported at its base, and neglect the axial deformation of segment AB. EI is constant.

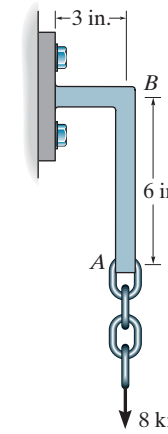

Assume that the deflection is small enough so that the 8-kip force remains in line with segment AB and then bending of segment of AB can be neglected.

$$\Delta_A = \frac{PL^3}{3EI} = \frac{8(3)^3}{3EI} = \frac{72}{EI} \qquad \textbf{Ans.}$$

$$\theta_A = \frac{PL^2}{2EI} = \frac{8(3^2)}{2EI} = \frac{36}{EI} \qquad \textbf{Ans.}$$

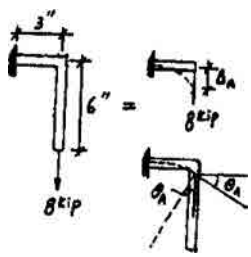

Ans:

$$\Delta_A = \frac{72}{EI}\downarrow,\ \theta_A = \frac{36}{EI}\circlearrowright$$

12–95. The pipe assembly consists of three equal-sized pipes with flexibility stiffness EI and torsional stiffness GJ. Determine the vertical deflection at point A.

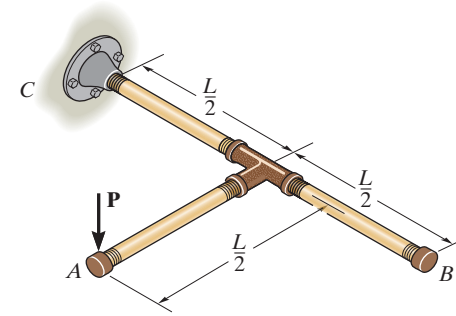

$$\Delta_D = \frac{P\left(\frac{L}{2}\right)^3}{3EI} = \frac{PL^3}{24EI}$$

$$(\Delta_A)_1 = \frac{P\left(\frac{L}{2}\right)^3}{3EI} = \frac{PL^3}{24EI}$$

$$\theta = \frac{TL}{GJ} = \frac{(PL/2)\left(\frac{L}{2}\right)}{GJ} = \frac{PL^2}{4GJ}$$

$$(\Delta_A)_2 = \theta\left(\frac{L}{2}\right) = \frac{PL^3}{8GJ}$$

$$\Delta_A = \Delta_D + (\Delta_A)_1 + (\Delta_A)_2$$

$$= \frac{PL^3}{24EI} + \frac{PL^3}{24EI} + \frac{PL^3}{8GJ}$$

$$= PL^3\left(\frac{1}{12EI} + \frac{1}{8GJ}\right) \qquad \textbf{Ans.}$$

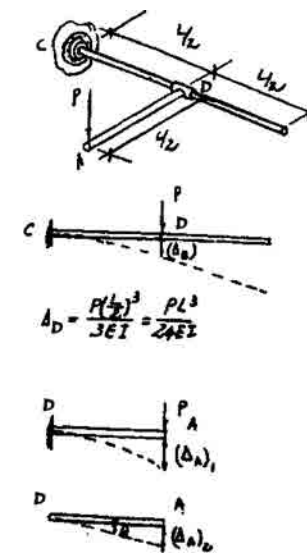

Ans:

$$\Delta_A = PL^3\left(\frac{1}{12EI} + \frac{1}{8GJ}\right)\downarrow$$

***12–96.** The framwork consists of two A992 steel cantilevered beams CD and BA and a simply supported beam CB. If each beam is made of steel and has a moment of inertia about its principal axis $I_x = 118\ \text{in}^4$, determine the deflection at the center of G of beam CB.

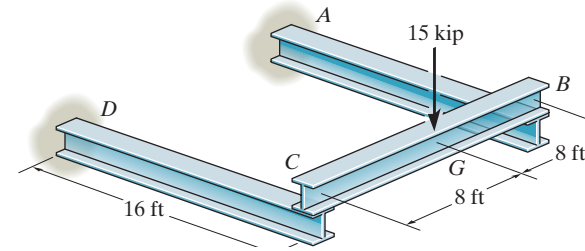

$$\Delta_C = \frac{PL^3}{3EI} = \frac{7.5(16^3)}{3EI} = \frac{10{,}240}{EI} \downarrow$$

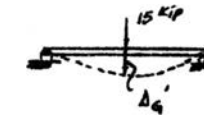

$$\Delta'_G = \frac{PL^3}{48EI} = \frac{15(16^3)}{48EI} = \frac{1{,}280}{EI} \downarrow$$

$$\Delta_G = \Delta_C + \Delta'_G$$

$$= \frac{10{,}240}{EI} + \frac{1{,}280}{EI} = \frac{11{,}520}{EI}$$

$$= \frac{11{,}520(1728)}{29(10^3)(118)} = 5.82\ \text{in.} \downarrow$$ **Ans.**

12–97. The wide-flange beam acts as a cantilever. Due to an error it is installed at an angle θ with the vertical. Determine the ratio of its deflection in the x direction to its deflection in the y direction at A when a load P is applied at this point. The moments of inertia are I_x and I_y. For the solution, resolve P into components and use the method of superposition. *Note*: The result indicates that large lateral deflections (x direction) can occur in narrow beams, $I_y << I_x$, when they are improperly installed in this manner. To show this numerically, compute the deflections in the x and y directions for an A992 steel W10 × 15, with $P = 1.5$ kip, $\theta = 10°$, and $L = 12$ ft.

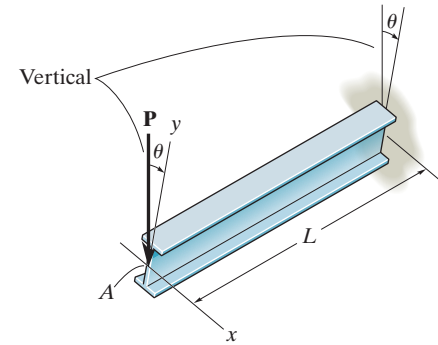

$$y_{max} = \frac{P\cos\theta\, L^3}{3EI_x}; \qquad x_{max} = \frac{P\sin\theta\, L^3}{3EI_y}$$

$$\frac{x_{max}}{y_{max}} = \frac{\frac{P\sin\theta\, L^3}{3\,EI_y}}{\frac{P\cos\theta\, L^3}{3\,EI_x}} = \frac{I_x}{I_y}\tan\theta \qquad \textbf{Ans.}$$

$W\,10 \times 15 \qquad I_x = 68.9\text{ in}^4 \qquad I_y = 2.89\text{ in}^4$

$$y_{max} = \frac{1.5(\cos 10°)(144)^3}{3(29)\left(10^3\right)(68.9)} = 0.736\text{ in.} \qquad \textbf{Ans.}$$

$$x_{max} = \frac{1.5(\sin 10°)(144)^3}{3(29)\left(10^3\right)(2.89)} = 3.09\text{ in.} \qquad \textbf{Ans.}$$

Ans:
$\frac{x_{max}}{y_{max}} = \frac{I_x}{I_y}\tan\theta,$
$y_{max} = 0.736$ in., $x_{max} = 3.09$ in.

12–98. Determine the vertical deflection at the end A of the bracket. Assume that the bracket is fixed supported at its base B and neglect axial deflection. EI is constant.

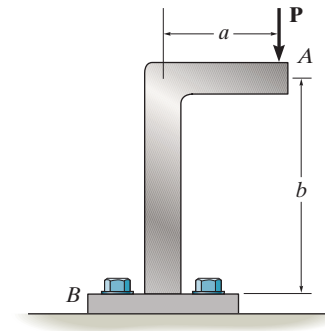

$$\theta = \frac{ML}{EI} = \frac{Pab}{EI}$$

$$(\Delta_A)_1 = \theta(a) = \frac{Pa^2b}{EI}$$

$$(\Delta_A)_2 = \frac{PL^3}{3EI} = \frac{Pa^3}{3EI}$$

$$\Delta_A = (\Delta_A)_1 + (\Delta_A)_2 = \frac{Pa^2b}{EI} + \frac{Pa^3}{3EI} = \frac{Pa^2(3b + a)}{3EI}$$ **Ans.**

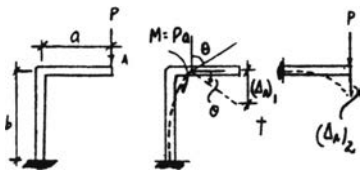

Ans:
$$\Delta_A = \frac{Pa^2(3b + a)}{3EI}\downarrow$$

12–99. Determine the reactions at the supports A and B, then draw the shear and moment diagram. EI is constant. Neglect the effect of axial load.

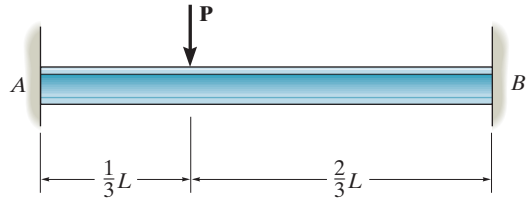

$$\circlearrowleft + \Sigma M_A = 0; \qquad M_A + B_y L - P\left(\frac{L}{3}\right) - M_B = 0 \tag{1}$$

$$+\uparrow \Sigma F_y = 0; \qquad A_y + B_y - P = 0 \tag{2}$$

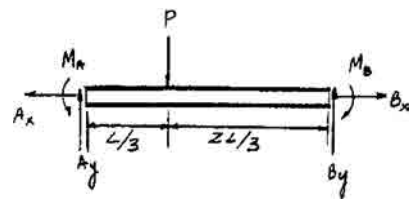

Moment Functions:

$M_1(x_1) = B_y x_1 - M_B$

$M_2(x_2) = A_y x_2 - M_A$

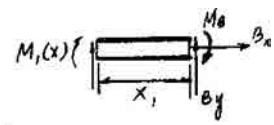

Slope and Elastic Curve:

$$EI\frac{d^2v}{dx^2} = M(x)$$

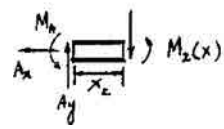

For $M_1(x) = B_y x_1 - M_B$; $\qquad EI\dfrac{d^2v_1}{dx_1^2} = B_y x_1 - M_B$

$$EI\frac{dv_2}{dx_2} = \frac{B_y x_1^2}{2} - M_B x_1 + C_1 \tag{3}$$

$$EIv_1 = \frac{B_y x_1^3}{6} - \frac{M_B x_1^2}{2} + C_1 x + C_2 \tag{4}$$

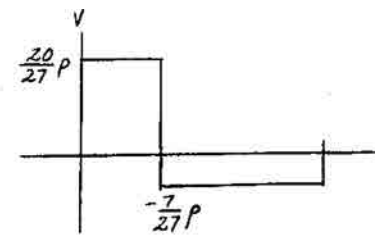

For $M_2(x) = A_y x_2 - M_A$

$$EI\frac{d^2v_2}{dx_2^2} = A_y x_2 - M_A$$

$$EI\frac{dv_2}{dx_2^2} = \frac{A_y x_2^2}{2} - M_A x_2 + C_3 \tag{5}$$

$$EIv_2 = \frac{A_y x_2^3}{6} - \frac{M_A x_2^3}{2} + C_3 x_2 + C_4 \tag{6}$$

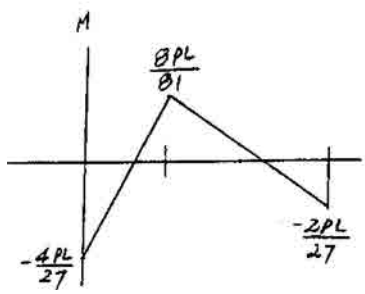

Boundary Conditions:

At $x_1 = 0$, $\dfrac{dv_1}{dx_1} = 0$

From Eq. (3),

$0 = 0 - 0 + C_1; \quad C_1 = 0$

At $x_1 = 0$, $v_1 = 0$

From Eq. (4),

$0 = 0 - 0 + 0 + C_2; \quad C_2 = 0$

Similarly, from Eqs. (5) and (6), $C_3 = C_4 = 0$.

12–99. Continued

At $x_1 = \frac{2}{3}L$, $x_2 = \frac{1}{3}L$, $v_1 = v_2$ and $\frac{dv_1}{dx_1} = -\frac{dv_2}{dx_2}$.

From Eqs. (4) and (6),

$$\frac{B_y}{6}\left(\frac{2}{3}L\right)^3 - \frac{M_B}{2}\left(\frac{2}{3}L\right)^2 = \frac{A_y}{6}\left(\frac{1}{3}L\right)^3 - \frac{M_A}{2}\left(\frac{1}{3}L\right)^2$$

$$8B_yL - 36M_B = A_yL - 9M_A \qquad (7)$$

From Eqs. (3) and (5),

$$\frac{B_y}{2}\left(\frac{2}{3}L\right)^2 - M_B\left(\frac{2}{3}L\right) = -\frac{A_y}{2}\left(\frac{1}{3}L\right)^2 + M_A\left(\frac{1}{3}L\right)$$

$$4B_yL - 12M_B = -A_yL + 6M_A \qquad (8)$$

Solving Eqs. (1), (2), (7) and (8) simultaneously,

$$A_y = \frac{20}{27}P \qquad \textbf{Ans.}$$

$$M_A = \frac{4}{27}PL \qquad \textbf{Ans.}$$

$$B_y = \frac{7}{27}P \qquad \textbf{Ans.}$$

$$M_B = \frac{2}{27}PL \qquad \textbf{Ans.}$$

Ans:
$A_y = \frac{20}{27}P$, $M_A = \frac{4}{27}PL$, $B_y = \frac{7}{27}P$, $M_B = \frac{2}{27}PL$

***12–100.** Determine the value of a for which the maximum positive moment has the same magnitude as the maximum negative moment. EI is constant.

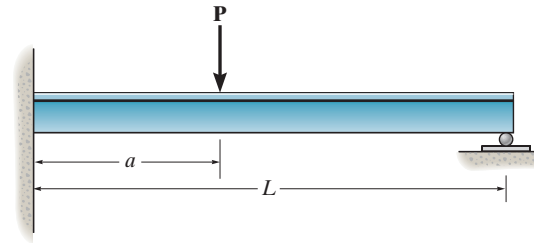

$$+\uparrow \Sigma F_y = 0; \qquad A_y + B_y - P = 0 \qquad [1]$$

$$\circlearrowleft + \Sigma M_A = 0; \qquad M_A + B_y L - Pa = 0 \qquad [2]$$

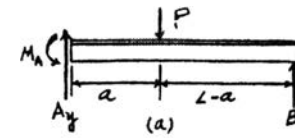

Moment Functions: FBD(b) and (c).

$$M(x_1) = B_y x_1$$

$$M(x_2) = B_y x_2 - P x_2 + PL - Pa$$

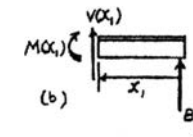

Slope and Elastic Curve:

$$EI\frac{d^2v}{dx^2} = M(x)$$

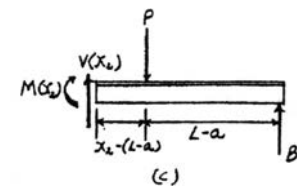

For $M(x_1) = B_y x_1$,

$$EI\frac{d^2v_1}{dx_1^2} = B_y x_1$$

$$EI\frac{dv_1}{dx_1} = \frac{B_y}{2}x_1^2 + C_1 \qquad [3]$$

$$EI\,v_1 = \frac{B_y}{6}x_1^3 + C_1 x_1 + C_2 \qquad [4]$$

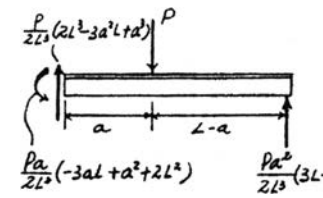

For $M(x_2) = B_y x_2 - P x_2 + PL - Pa$,

$$EI\frac{d^2v_2}{dx_2^2} = B_y x_2 - P x_2 + PL - Pa$$

$$EI\frac{dv_2}{dx_2} = \frac{B_y}{2}x_2^2 - \frac{P}{2}x_2^2 + PLx_2 - Pax_2 + C_3 \qquad [5]$$

$$EI\,v_2 = \frac{B_y}{6}x_2^3 - \frac{P}{6}x_2^3 + \frac{PL}{2}x_2^2 - \frac{Pa}{2}x_2^2 + C_3 x_2 + C_4 \qquad [6]$$

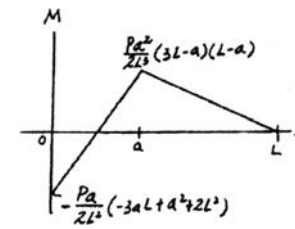

Boundary Conditions:

$v_1 = 0$ at $x_1 = 0$. From Eq. [4], $C_2 = 0$

$\frac{dv_2}{dx^2} = 0$ at $x_2 = L$. From Eq. [5]

$$0 = \frac{B_y L^2}{2} - \frac{PL^2}{2} + PL^2 - PaL + C_3$$

$$C_3 = -\frac{B_y L^2}{2} - \frac{PL^2}{2} + PaL$$

12–100. Continued

$v_2 = 0$ at $x_2 = L$. From Eq. [6],

$$0 = \frac{B_y L^3}{6} - \frac{PL^3}{6} + \frac{PL^3}{2} - \frac{PaL^2}{2} + \left(-\frac{B_y L^2}{2} - \frac{PL^2}{2} + PaL\right)L + C_4$$

$$C_4 = \frac{B_y L^3}{3} + \frac{PL^3}{6} - \frac{PaL^2}{2}$$

Continuity Conditions:

At $x_1 = x_2 = L - a, \frac{dv_1}{dx_1} = \frac{dv_2}{dx_2}$. From Eqs. [3] and [5],

$$\frac{B_y}{2}(L-a)^2 + C_1 = \frac{B_y}{2}(L-a)^2 - \frac{P}{2}(L-a)^2 + PL(L-a)$$

$$- Pa(L-a) + \left(-\frac{B_y L^2}{2} - \frac{PL^2}{2} + PaL\right)$$

$$C_1 = \frac{Pa^2}{2} - \frac{B_y L^2}{2}$$

At $x_1 = x_2 = L - a, v_1 = v_2$. From Eqs. [4] and [6],

$$\frac{B_y}{6}(L-a)^3 + \left(\frac{Pa^2}{2} - \frac{B_y L^2}{2}\right)(L-a)$$

$$= \frac{B_y}{6}(L-a)^3 - \frac{P}{6}(L-a)^3 + \frac{PL}{2}(L-a)^2 - \frac{Pa}{2}(L-a)^2$$

$$+ \left(-\frac{B_y L^2}{2} - \frac{PL^2}{2} + PaL\right)(L-a) + \frac{B_y L^3}{3} + \frac{PL^3}{6} - \frac{PaL^2}{2}$$

$$\frac{Pa^3}{6} - \frac{Pa^2 L}{2} + \frac{B_y L^3}{3} = 0$$

$$B_y = \frac{3Pa^2}{2L^2} - \frac{Pa^3}{2L^3} = \frac{Pa^2}{2L^3}(3L - a)$$

Substituting B_y into Eqs. [1] and [2], we have

$$A_y = \frac{P}{2L^3}\left(2L^3 - 3a^2 L + a^3\right)$$

$$M_A = \frac{Pa}{2L^2}\left(-3aL + a^2 + 2L^2\right) = \frac{Pa}{2L^2}(2L - a)(L - a)$$

Require $|M_{\max(+)}| = |M_{\max(-)}|$. From the moment diagram,

$$\frac{Pa^2}{2L^3}(3L - a)(L - a) = \frac{Pa}{2L^2}(2L - a)(L - a)$$

$$a^2 - 4aL + 2L^2 = 0$$

$$a = \left(2 - \sqrt{2}\right)L \qquad \textbf{Ans.}$$

12–101. Determine the reactions at the supports A, B, and C; then draw the shear and moment diagrams. EI is constant.

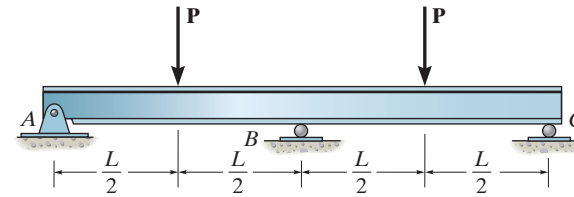

Support Reactions: FBD(a).

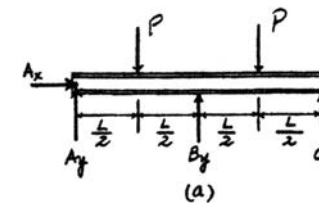

$\xrightarrow{+} \Sigma F_x = 0; \qquad A_x = 0$ **Ans.**

$+\uparrow \Sigma F_y = 0; \qquad A_y + B_y + C_y - 2P = 0$ [1]

$\circlearrowleft + \Sigma M_A = 0; \qquad B_y L + C_y(2L) - P\left(\frac{L}{2}\right) - P\left(\frac{3L}{2}\right) = 0$ [2]

Moment Function: FBD (b) and (c).

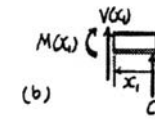

$M(x_1) = C_y x_1$

$M(x_2) = C_y x_2 - Px_2 + \frac{PL}{2}$

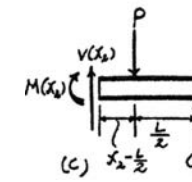

Slope and Elastic Curve:

$$EI\frac{d^2v}{dx^2} = M(x)$$

For $M(x_1) = C_y x_1$,

$$EI\frac{d^2v_1}{dx_1^2} = C_y x_1$$

$$EI\frac{dv_1}{dx_1} = \frac{C_y}{2}x_1^2 + C_1 \qquad [3]$$

$$EI\,v_1 = \frac{C_y}{6}x_1^3 + C_1x_1 + C_2 \qquad [4]$$

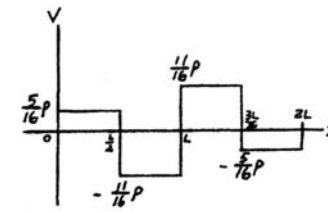

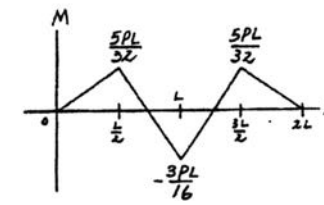

For $M(x_2) = C_y x_2 - Px_2 + \frac{PL}{2}$,

$$EI\frac{d^2v_2}{dx_2^2} = C_y x_2 - Px_2 + \frac{PL}{2}$$

$$EI\frac{dv_2}{dx_2} = \frac{C_y}{2}x_2^2 - \frac{P}{2}x_2^2 + \frac{PL}{2}x_2 + C_3 \qquad [5]$$

$$EI\,v_2 = \frac{C_y}{6}x_2^3 - \frac{P}{6}x_2^3 + \frac{PL}{4}x_2^2 + C_3x_2 + C_4 \qquad [6]$$

Boundary Conditions:

$v_1 = 0$ at $x_1 = 0$. From Eq. [4], $C_2 = 0$

Due to symmetry, $\frac{dv_2}{dx_2} = 0$ at $x_2 = L$. From Eq. [5],

$$0 = \frac{C_y L^2}{2} - \frac{PL^2}{2} + \frac{PL^2}{2} + C_3 \qquad C_3 = -\frac{C_y L^2}{2}$$

12–101. Continued

$v_2 = 0$ at $x_2 = L$. From Eq. [6],

$$0 = \frac{C_y L^3}{6} - \frac{PL^3}{6} + \frac{PL^3}{4} + \left(-\frac{C_y L^2}{2}\right)L + C_4$$

$$C_4 = \frac{C_y L^3}{3} - \frac{PL^3}{12}$$

Continuity Conditions:

At $x_1 = x_2 = \frac{L}{2}, \frac{dv_1}{dx_1} = \frac{dv_2}{dx_2}$. From Eqs. [3] and [5],

$$\frac{C_y}{2}\left(\frac{L}{2}\right)^2 + C_1 = \frac{C_y}{2}\left(\frac{L}{2}\right)^2 - \frac{P}{2}\left(\frac{L}{2}\right)^2 + \frac{PL}{2}\left(\frac{L}{2}\right) - \frac{C_y L^2}{2}$$

$$C_1 = \frac{PL^2}{8} - \frac{C_y L^2}{2}$$

At $x_1 = x_2 = \frac{L}{2}, v_1 = v_2$. From Eqs. [4] and [6],

$$\frac{C_y}{6}\left(\frac{L}{2}\right)^3 + \left(\frac{PL^2}{8} - \frac{C_y L^2}{2}\right)\left(\frac{L}{2}\right)$$

$$= \frac{C_y}{6}\left(\frac{L}{2}\right)^3 - \frac{P}{6}\left(\frac{L}{2}\right)^3 + \frac{PL}{4}\left(\frac{L}{2}\right)^2 + \left(-\frac{C_y L^2}{2}\right)\left(\frac{L}{2}\right) + \frac{C_y L^3}{3} - \frac{PL^3}{12}$$

$$C_y = \frac{5}{16}P \qquad \textbf{Ans.}$$

Substituting C_y into Eqs. [1] and [2],

$$B_y = \frac{11}{8}P \qquad A_y = \frac{5}{16}P \qquad \textbf{Ans.}$$

Ans:

$A_x = 0, C_y = \frac{5}{16}P, B_y = \frac{11}{8}P, A_y = \frac{5}{16}P$

12–102. Determine the reactions at the supports A and B, then draw the shear and moment diagrams. Use discontinuity functions. EI is constant.

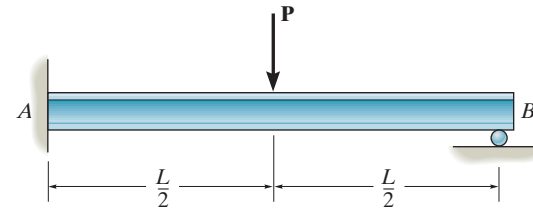

$\xrightarrow{+} \Sigma F_x = 0 \qquad A_B = 0$ **Ans.**

$+\uparrow \Sigma F_y = 0 \qquad A_y + B_y - P = 0$

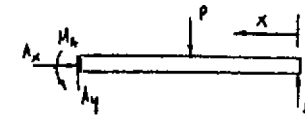

$$A_y = P - B_y \tag{1}$$

$\circlearrowleft + \Sigma M_A = 0 \qquad M_A + B_y(L) - P(L/2) = 0$

$$M_A = \frac{PL}{2} - B_y L \tag{2}$$

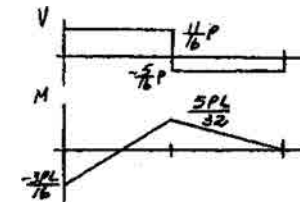

Bending Moment $M(x)$:

$$M(x) = -(-B_y)\langle x - 0\rangle - P\left\langle x - \frac{L}{2}\right\rangle = B_y x - P\left\langle x - \frac{L}{2}\right\rangle$$

Elastic Curve and Slope:

$$EI\frac{d^2v}{dx^2} = M(x)$$

$$EI\frac{d^2v}{dx^2} = B_y x - P\left\langle x - \frac{L}{2}\right\rangle$$

$$EI\frac{dv}{dx} = \frac{B_y x^2}{2} - \frac{P}{2}\left\langle x - \frac{L}{2}\right\rangle^2 + C_1 \tag{3}$$

$$EIv = \frac{B_y x^3}{6} - \frac{P}{6}\left\langle x - \frac{L}{2}\right\rangle^3 + C_1 x + C_3 \tag{4}$$

Boundary Conditions:

$v = 0 \quad \text{at} \quad x = 0$

From Eq. (4)

$C_1 = 0$

$v = 0 \quad \text{at} \quad x = L$

From Eq. (4)

$$0 = \frac{B_y L^3}{6} - \frac{PL^3}{48} + C_1 L \tag{5}$$

$\frac{dv}{dx} = 0 \quad \text{at} \quad x = L$

From Eq. (3),

$$0 = \frac{B_y L^2}{2} - \frac{PL^2}{8} + C_1 \tag{6}$$

Solving Eqs. (5) and (6) yields;

$B_y = \frac{5}{16}P$ **Ans.** $\qquad C_1 = \frac{-PL^3}{32}$

Substitute: $B_y = \frac{5}{16}P$ into Eqs. (1) and (2),

$A_y = \frac{11}{16}P$ **Ans.** $\qquad M_A = \frac{3PL}{16}$ **Ans.**

Ans:

$B_y = \frac{5}{16}P,\ A_y = \frac{11}{16}P,\ M_A = \frac{3PL}{16}$

12–103. Determine the reactions at the supports A and B, then draw the shear and moment diagrams. EI is constant.

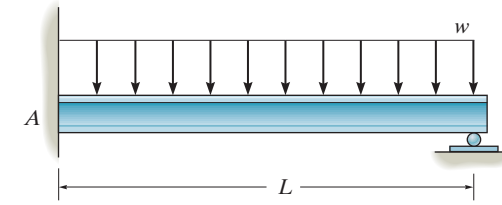

$\leftarrow \Sigma F_a = 0; \qquad A_y = 0$ **Ans.**

$+\uparrow \Sigma F_y = 0; \quad A_y + B_y - wL = 0$ (1)

$\circlearrowleft + \Sigma M_A = 0; \quad M_A + B_y L - wL\left(\frac{L}{2}\right) = 0$ (2)

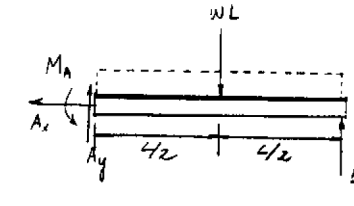

$\circlearrowleft + \Sigma M_{NA} = 0; \quad B_y(x) - wx\left(\frac{x}{2}\right) - M(x) = 0$

$$M(x) + B_y x - \frac{wx^2}{2}$$

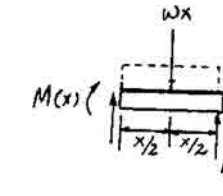

$$EI\frac{d^2v}{dx^2} = M(x)$$

$$EI\frac{d^2v}{dx^2} = B_y x - \frac{wx^2}{2}$$

$$EI\frac{dv}{dx} = \frac{B_y x^2}{2} - \frac{wx^3}{6} + C_1 \qquad (3)$$

$$EIv = \frac{B_y x^3}{6} - \frac{wx^4}{24} + C_1 x + C_2 \qquad (4)$$

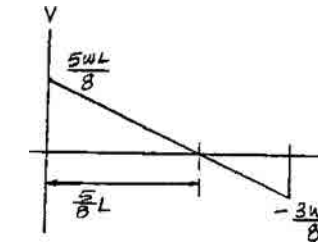

Boundary Conditions:

At $x = 0, \qquad v = 0$

From Eq. (4),

$0 = 0 - 0 + 0 + C_2; \qquad C_2 = 0$

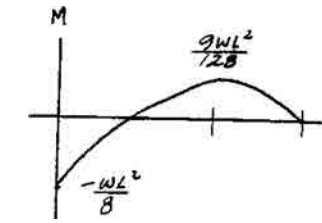

At $x = L, \quad \frac{dv}{dx} = 0$

From Eq. (3),

$$0 = \frac{B_y L^2}{2} - \frac{wL^3}{6} + C_1 \qquad (5)$$

At $x = L, \quad v = 0$

From Eq. (4),

$$0 = \frac{B_y L^3}{6} - \frac{wL^4}{24} + C_1 L \qquad (6)$$

Solving Eqs. (5) and (6) yields:

$$B_y = \frac{3wL}{8} \qquad \textbf{Ans.}$$

$$C_1 = -\frac{wL^3}{48}$$

Substituting B_y into Eqs. (1) and (2) yields:

$$A_y = \frac{5wL}{8} \qquad \textbf{Ans.}$$

$$M_A = \frac{wL^2}{8} \qquad \textbf{Ans.}$$

Ans:

$A_x = 0, B_y = \frac{3wL}{8},$

$A_y = \frac{5wL}{8}, M_A = \frac{wL^2}{8}$

***12–104.** The loading on a floor beam used in the airplane is shown. Use discontinuity functions and determine the reactions at the supports A and B, and then draw the moment diagram for the beam.

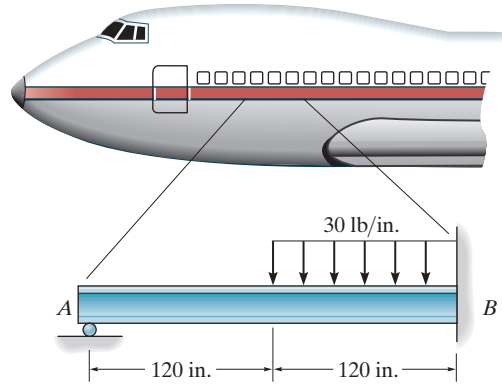

$\xrightarrow{+} \Sigma F_x = 0 \qquad B_x = 0$ **Ans.**

$+\uparrow \Sigma F_y = 0 \qquad A_y + B_y - \dfrac{wL}{2} = 0; \qquad B_y = \dfrac{wL}{2} - A_y$ (1)

$\circlearrowleft + \Delta\Sigma M_A = 0 \qquad M_B + A_y L - \dfrac{wL^2}{8} = 0 \qquad M_B = \dfrac{wL^2}{8} - A_y L$ (2)

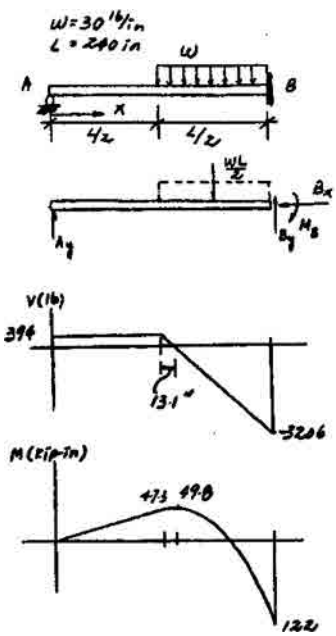

Bending Moment $M(x)$:

$$M(x) = -(-A_y)\langle x - 0\rangle - \frac{w}{2}\left\langle x - \frac{L}{2}\right\rangle^2 = A_y x - \frac{w}{2}\left\langle x - \frac{L}{2}\right\rangle^2$$

Elastic Curve and Slope:

$$EI\frac{d^2v}{dx^2} = M(x)$$

$$EI\frac{d^2v}{dx^2} = A_y x - \frac{w}{2}\left\langle x - \frac{L}{2}\right\rangle^2$$

$$EI\frac{dv}{dx} = \frac{A_y x^2}{2} - \frac{w}{6}\left\langle x - \frac{L}{2}\right\rangle^3 + C_1 \qquad (3)$$

$$EIv = \frac{A_y x^3}{6} - \frac{w}{24}\left\langle x - \frac{L}{2}\right\rangle^4 + C_1 x + C_3 \qquad (4)$$

Boundary Conditions:

$v = 0 \quad \text{at} \quad x = 0$

From Eq. (4)

$C_2 = 0$

$v = 0 \quad \text{at} \quad x = L$

From Eq. (4)

$$0 = \frac{A_y L^3}{6} - \frac{wL^4}{384} + C_1 L \qquad (5)$$

$\dfrac{dv}{dx} = 0 \quad \text{at} \quad x = L$

From Eq. (3)

$$0 = \frac{A_y L^2}{2} - \frac{wL^3}{48} + C_1 \qquad (6)$$

Solving Eqs. (5) and (6) yield:

$$A_y = \frac{7}{128}wL \qquad C_1 = \frac{-5}{768}wL^3$$

12–104. Continued

Substitute A_y into Eqs. (1) and (2):

$$B_y = \frac{57}{128}wL \qquad M_B = \frac{9}{128}wL^2$$

Substitute numerical values:

$$A_y = \frac{7}{128}(30)(240) = 394 \text{ lb}$$ **Ans.**

$$B_y = \frac{57}{128}(30)(240) = 3206 \text{ lb} = 3.21 \text{ kip}$$ **Ans.**

$$M_B = \frac{9}{128}(30)(240)^2 = 121500 \text{ lb}\cdot\text{in} = 122 \text{ kip}\cdot\text{ in.}$$ **Ans.**

12–105. Use discontinuity functions and determine the reactions at the supports, then draw the shear and moment diagrams. *EI* is constant.

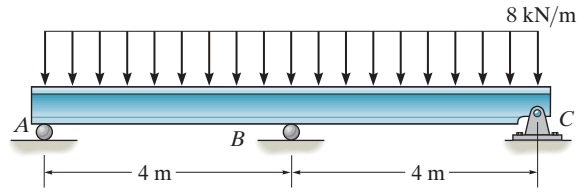

$\xrightarrow{+} \Sigma F_x = 0; \qquad C_A = 0$ **Ans.**

$+\uparrow \Sigma F_y = 0; \qquad A_y + B_y + C_y - 2wL = 0$ (1)

$\circlearrowleft + \Sigma M_C = 0; \qquad A_y(2L) + B_y(L) - 2wL(L) = 0; \quad B_y = 2wL - 2A_y$ (2)

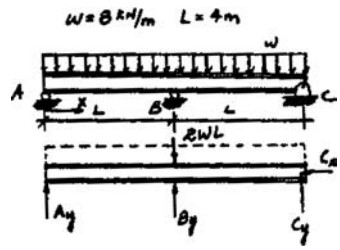

Bending Moment $M(x)$:

$$M(x) = -(-A_y)\langle x - 0\rangle - \frac{w}{2}\langle x - 0\rangle^2 - (-B_y)\langle x - L\rangle$$

$$= A_y x - \frac{w}{2}x^2 + B_y\langle x - L\rangle$$

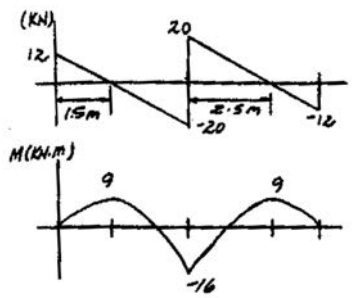

Elastic Curve and Slope:

$$EI\frac{d^2v}{dx^2} = M(x)$$

$$EI\frac{d^2v}{dx^2} = A_y x - \frac{w}{2}x^2 + B_y\langle x - L\rangle$$

$$EI\frac{dv}{dx} = \frac{A_y x^2}{2} - \frac{wx^3}{6} + \frac{B_y}{2}\langle x - L\rangle^2 + C_1 \qquad (3)$$

$$EIv = \frac{A_y x^3}{6} - \frac{wx^4}{24} + \frac{B_y}{6}\langle x - L\rangle^3 + C_1 x + C_2 \qquad (4)$$

Boundary Conditions:

$v = 0 \quad \text{at} \quad x = 0$

From Eq. (4)

$C_2 = 0$

$v = 0 \quad \text{at} \quad x = L$

From Eq. (4)

$$0 = \frac{A_y L^3}{6} - \frac{wL^4}{24} + C_1 L \qquad (5)$$

$\dfrac{dv}{dx} = 0 \quad \text{at} \quad x = L$

From Eq. (3)

$$0 = \frac{A_y L^2}{2} - \frac{wL^3}{6} + C_1 \qquad (6)$$

12–105. Continued

Solving for Eqs. (5) and (6) yield:

$$C_1 = \frac{wL^3}{48}$$

$$A_y = \frac{3}{8}wL = \frac{3}{8}(8)(4) = 12.0\text{ kN}$$ **Ans.**

Substitute A_y into Eqs. (1) and (2)

$$B_y = \frac{5}{4}wL = \frac{5}{4}(8)(4) = 40.0\text{ kN}$$ **Ans.**

$$C_y = \frac{3}{8}wL = \frac{3}{8}(8)(4) = 12.0\text{ kN}$$ **Ans.**

Ans:
$C_x = 0$, $A_y = 12.0$ kN, $B_y = 40.0$ kN,
$C_y = 12.0$ kN

12–106. Determine the reactions at the support A and B. EI is constant.

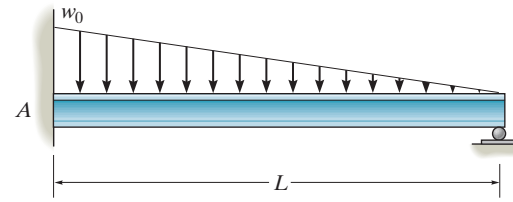

Support Reactions: FBD (a).

$\xrightarrow{+} \Sigma F_x = 0; \qquad A_x = 0$ **Ans.**

$+\uparrow \Sigma F_y = 0; \qquad A_y + B_y - \frac{w_0 L}{2} = 0 \qquad (1)$

$\circlearrowleft + \Sigma M_A = 0; \qquad B_y L + M_A - \frac{w_0 L}{2}\left(\frac{L}{3}\right) = 0 \qquad (2)$

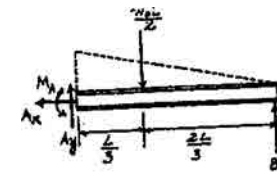

Moment Function: FBD (b).

$\circlearrowleft + \Sigma M_{NA} = 0; \quad -M(x) - \frac{1}{2}\left(\frac{w_0}{L}x\right)x\left(\frac{x}{3}\right) + B_y x = 0$

$$M(x) = B_y x - \frac{w_0}{6L}x^3$$

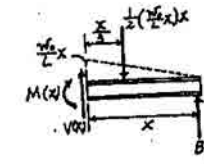

Slope and Elastic Curve:

$$EI\frac{d^2v}{dx^2} = M(x)$$

$$EI\frac{d^2v}{dx^2} = B_y x - \frac{w_0}{6L}x^3$$

$$EI\frac{dv}{dx} = \frac{B_y}{2}x^2 - \frac{w_0}{24L}x^4 + C_1 \qquad (3)$$

$$EIv = \frac{B_y}{6}x^3 - \frac{w_0}{120L}x^5 + C_1 x + C_2 \qquad (4)$$

Boundary Conditions:

At $x = 0, \quad v = 0.$ From Eq. (4), $C_2 = 0$

At $x = L, \frac{dv}{dx} = 0.$ From Eq. (3),

$$0 = \frac{B_y L^2}{2} - \frac{w_0 L^3}{24} + C_1$$

$$C_1 = \frac{B_y L^2}{2} + \frac{w_0 L^3}{24}$$

At $x = L, \ v = 0.$ From Eq. (4),

$$0 = \frac{B_y L^3}{6} - \frac{w_0 L^4}{120} + \left(-\frac{B_y L^2}{2} + \frac{w_0 L^3}{24}\right)L$$

$$B_y = \frac{w_0 L}{10}$$ **Ans.**

Substituting B_y into Eqs. (1) and (2) yields,

$$A_y = \frac{2w_0 L}{5} \qquad M_A = \frac{w_0 L^2}{15}$$ **Ans.**

Ans:

$A_x = 0, B_y = \frac{w_0 L}{10}, A_y = \frac{2w_0 L}{5}, M_A = \frac{w_0 L^2}{15}$

12–107. Determine the reactions at pin support A and roller supports B and C. EI is constant.

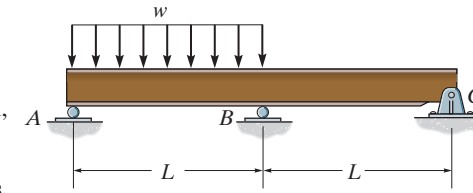

Equations of Equilibrium. Referring to the free-body diagram of the entire beam, Fig. *a*,

$\overset{+}{\rightarrow} \Sigma F_x = 0; \qquad A_x = 0$ **Ans.**

$+\uparrow \Sigma F_y = 0; \qquad A_y + B_y + C_y - wL = 0 \qquad (1)$

$\circlearrowleft + \Sigma M_B = 0; \qquad C_y(L) + wL\left(\frac{L}{2}\right) - A_y(L) = 0$

$$A_y - C_y = \frac{wL}{2} \qquad (2)$$

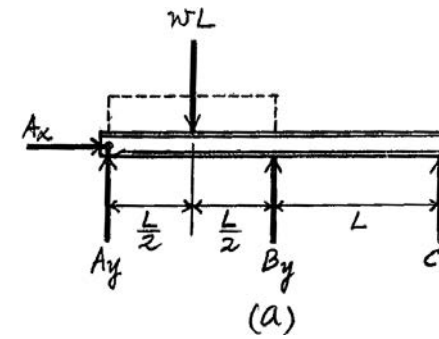

Moment Functions. Referring to the free-body diagram of the beam's segment, Fig. *b*, $M(x_1)$ is

$\circlearrowleft + \Sigma M_O = 0; \qquad M(x_1) + wx_1\left(\frac{x_1}{2}\right) - A_y x_1 = 0$

$$M(x_1) = A_y x_1 - \frac{w}{2}x_1^2$$

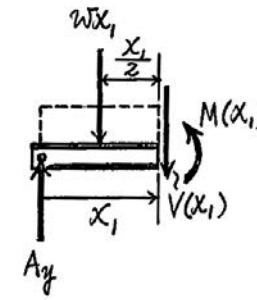

and $M(x_2)$ is given by

$\circlearrowleft + \Sigma M_O = 0; \qquad C_y x_2 - M(x_2) = 0$

$$M(x_2) = C_y x_2$$

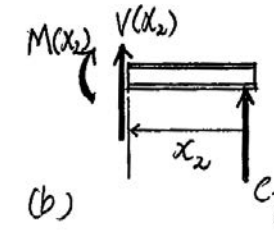

Equations of Slope and Elastic Curves.

$$EI\frac{d^2v}{dx^2} = M(x)$$

For coordinate x_1,

$$EI\frac{d^2v_1}{dx_1^2} = A_y x_1 - \frac{w}{2}x_1^2$$

$$EI\frac{dv_1}{dx_1} = \frac{A_y}{2}x_1^2 - \frac{w}{6}x_1^3 + C_1 \qquad (3)$$

$$EIv_1 = \frac{A_y}{6}x_1^3 - \frac{w}{24}x_1^4 + C_1x_1 + C_2 \qquad (4)$$

For coordinate x_2,

$$EI\frac{d^2v_2}{dx_2^2} = C_y x_2$$

$$EI\frac{dv_2}{dx_2} = \frac{C_y}{2}x_2^2 + C_3 \qquad (5)$$

$$EIv_2 = \frac{C_y}{6}x_2^3 + C_3x_2 + C_4 \qquad (6)$$

12–107. Continued

Boundary Conditions. At $x_1 = 0, v_1 = 0$. Then Eq. (4) gives

$$0 = 0 - 0 + 0 + C_2 \qquad C_2 = 0$$

At $x_1 = L, v_1 = 0$. Then Eq. (4) gives

$$0 = \frac{A_y}{6}\left(L^3\right) - \frac{w}{24}\left(L^4\right) + C_1 L \qquad C_1 = \frac{wL^3}{24} - \frac{A_y L^2}{6}$$

At $x_2 = 0, v_2 = 0$. Then Eq. (6) gives

$$0 = 0 + 0 + C_4 \qquad C_4 = 0$$

At $x_2 = L, v_2 = 0$. Then Eq. (6) gives

$$0 = \frac{C_y}{6}\left(L^3\right) + C_3 L \qquad C_3 = -\frac{C_y L^2}{6}$$

Continuity Conditions. At $x_1 = x_2 = L, \frac{dv_1}{dx_1} = -\frac{dv_2}{dx_2}$. Then Eqs. (3) and (5) give

$$\frac{A_y}{2}\left(L^2\right) - \frac{w}{6}\left(L^3\right) + \left(\frac{wL^3}{24} - \frac{A_y L^2}{6}\right) = -\left[\frac{C_y}{2}\left(L^2\right) - \frac{C_y L^2}{6}\right]$$

$$A_y + C_y = \frac{3wL}{8} \tag{7}$$

Solving Eqs. (2) and (7),

$$A_y = \frac{7wL}{16} \qquad C_y = -\frac{wL}{16} \qquad \textbf{Ans.}$$

The negative sign indicates that C_y acts in the opposite sense to that shown on free-body diagram. Substituting these results into Eq. (1),

$$B_y = \frac{5wL}{8} \qquad \textbf{Ans.}$$

The shear and moment diagrams are shown in Figs. *c* and *d*, respectively.

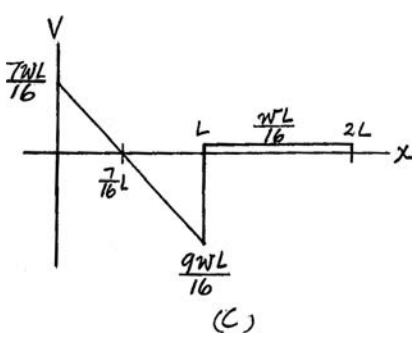

(c)

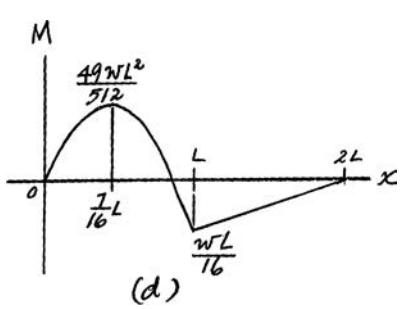

(d)

Ans:

$A_x = 0, A_y = \frac{7wL}{16}, C_y = -\frac{wL}{16}, B_y = \frac{5wL}{8}$

12–108. Determine the moment reactions at the supports A and B, then draw the shear and moment diagrams. Solve by expressing the internal moment in the beam in terms of A_y and M_A. EI is constant.

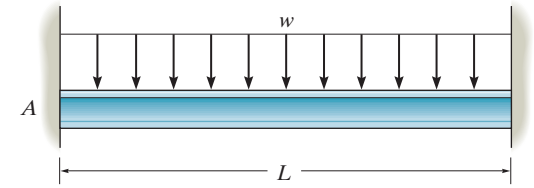

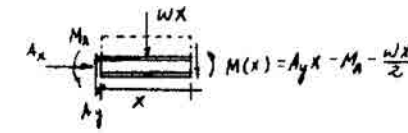

$$M(x) = A_y x - M_A - \frac{wx^2}{2}$$

Elastic Curve and Slope:

$$EI\frac{d^2v}{dx^2} = M(x) = A_y x - M_A - \frac{wx^2}{2}$$

$$EI\frac{dv}{dx} = \frac{A_y x^2}{2} - M_A x - \frac{wx^3}{6} + C_1 \qquad (1)$$

$$EIv = \frac{A_y x^3}{6} - \frac{M_A x^2}{2} - \frac{wx^4}{24} + C_1 x + C_2 \qquad (2)$$

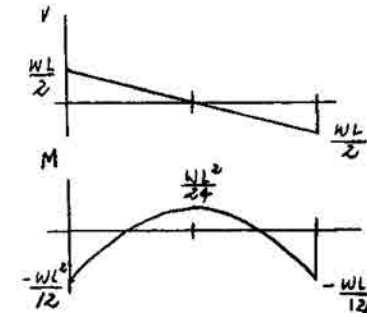

Boundary Conditions:

$$\frac{dv}{dx} = 0 \quad \text{at} \quad x = 0$$

From Eq. (1)

$$C_1 = 0$$

$$v = 0 \quad \text{at} \quad x = 0$$

From Eq. (2)

$$C_2 = 0$$

$$\frac{dv}{dx} = 0 \quad \text{at} \quad x = L$$

From Eq. (1)

$$0 = \frac{A_y L^2}{2} - M_A L - \frac{wL^3}{6} \qquad (3)$$

$$v = 0 \quad \text{at} \quad x = L$$

From Eq. (2)

$$0 = \frac{A_y L^3}{6} - \frac{M_A L^2}{2} - \frac{wL^4}{24} \qquad (4)$$

Solving Eqs. (3) and (4) yields:

$$A_y = \frac{wL}{2}$$

$$M_A = \frac{wL^2}{12} \qquad \textbf{Ans.}$$

Due to symmetry:

$$M_B = \frac{wL^2}{12} \qquad \textbf{Ans.}$$

12–109. The beam has a constant E_1I_1 and is supported by the fixed wall at B and the rod AC. If the rod has a cross-sectional area A_2 and the material has a modulus of elasticity E_2, determine the force in the rod.

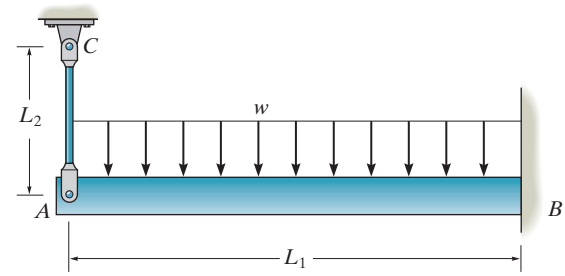

$$+\uparrow \Sigma F_y = 0 \qquad T_{AC} + B_y - wL_1 = 0$$

$$\circlearrowleft + \ \Sigma M_B = 0 \qquad T_{AC}(L_1) + M_B - \frac{wL_1{}^2}{2} = 0 \tag{1}$$

$$M_B = \frac{wL_1{}^2}{2} - T_{AC}L_1 \tag{2}$$

Bending Moment $M(x)$:

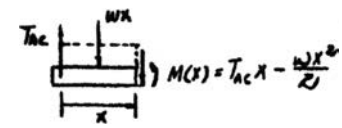

$$M(x) = T_{AC}x - \frac{wx^2}{2}$$

Elastic Curve and Slope:

$$EI\frac{d^2v}{dx^2} = M(x) = T_{AC}x - \frac{wx^2}{2}$$

$$EI\frac{dv}{dx} = \frac{T_{AC}x^2}{2} - \frac{wx^3}{6} + C_1 \tag{3}$$

$$EIv = \frac{T_{AC}x^3}{6} - \frac{wx^4}{24} + C_1x + C_2 \tag{4}$$

Boundary Conditions:

$$v = \frac{T_{AC}L_2}{A_2E_2} \qquad x = 0$$

From Eq. (4)

$$-E_1I_1\left(\frac{T_{AC}L_2}{A_2E_2}\right) = 0 - 0 + 0 + C_2$$

$$C_2 = \left(\frac{-E_1I_1L_2}{A_2E_2}\right)T_{AC}$$

$$v = 0 \qquad \text{at} \qquad x = L_1$$

From Eq. (4)

$$0 = \frac{T_{AC}L_1{}^3}{6} - \frac{wL_1{}^4}{24} + C_1L_1 - \frac{E_1I_1L_2}{A_2E_2}T_{AC} \tag{5}$$

$$\frac{dv}{dx} = 0 \qquad \text{at} \qquad x = L_1$$

From Eq. (3)

$$0 = \frac{T_{AC}L_1{}^2}{2} - \frac{wL_1{}^3}{6} + C_1 \tag{6}$$

Solving Eqs. (5) and (6) yields:

$$T_{AC} = \frac{3A_2E_2wL_1{}^4}{8\left(A_2E_2L_1{}^3 + 3E_1I_1L_2\right)} \qquad \textbf{Ans.}$$

Ans:

$$T_{AC} = \frac{3A_2E_2wL_1^4}{8(A_2E_2L_1^3 + 3E_1I_1L_2)}$$

12–110. The beam is supported by a pin at A, a roller at B, and a post having a diameter of 50 mm at C. Determine the support reactions at A, B, and C. The post and the beam are made of the same material having a modulus of elasticity $E = 200$ GPa, and the beam has a constant moment of inertia $I = 255(10^6)\ \text{mm}^4$.

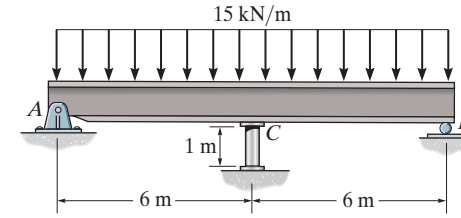

Equations of Equilibrium. Referring to the free-body diagram of the entire beam, Fig. *a*,

$\xrightarrow{+} \Sigma F_x = 0;\qquad A_x = 0$ **Ans.**

$+\uparrow \Sigma F_y = 0;\qquad A_y + B_y + F_C - 15(12) = 0 \qquad (1)$

$\circlearrowleft + \Sigma M_B = 0;\qquad 15(12)(6) - F_C(6) - A_y(12) = 0$

$2A_y + F_C = 180 \qquad (2)$

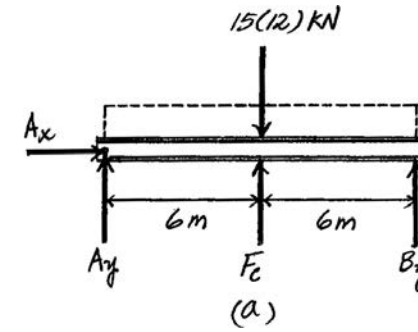

Moment Functions. Referring to the free-body diagram of the beam's segment, Fig. *b*,

$\circlearrowleft + \Sigma M_O = 0;\qquad M(x) + 15x\left(\frac{x}{2}\right) - A_y x = 0$

$M(x) = A_y x - 7.5x^2$

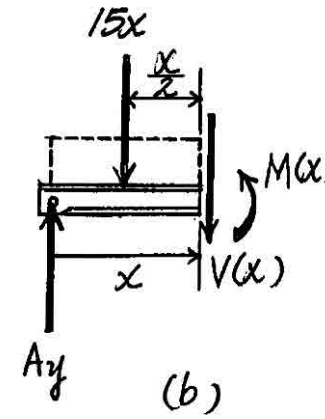

Equations of Slope and Elastic Curves.

$$EI\frac{d^2v}{dx^2} = M(x)$$

$$EI\frac{d^2v}{dx^2} = A_y x - 7.5x^2$$

$$EI\frac{dv}{dx} = \frac{A_y}{2}x^2 - 2.5x^3 + C_1 \qquad (3)$$

$$EIv = \frac{A_y}{6}x^3 - 0.625x^4 + C_1 x + C_2 \qquad (4)$$

Boundary Conditions. At $x = 0$, $v = 0$. Then Eq. (4) gives

$0 = 0 - 0 + 0 + C_2 \qquad C_2 = 0$

At $x = 6$ m, $v = -\Delta_C = -\frac{F_C L_C}{A_C E} = -\frac{F_C(1)}{\frac{\pi}{4}(0.05^2)E} = -\frac{1600F_C}{\pi E}$. Then Eq. (4) gives

$$E\left[255\left(10^{-6}\right)\right]\left(-\frac{1600F_C}{\pi E}\right) = \frac{A_y}{6}\left(6^3\right) - 0.625\left(6^4\right) + C_1(6)$$

$$C_1 = 135 - 6A_y - 0.02165F_C$$

Due to symmetry, $\frac{dv}{dx} = 0$ at $x = 6$ m. Then Eq. (3) gives

$$0 = \frac{A_y}{2}\left(6^2\right) - 2.5\left(6^3\right) + 135 - 6A_y - 0.02165F_C$$

$$12A_y - 0.02165F_C = 405 \qquad (5)$$

Solving Eqs. (2) and (5),

$F_C = 112.096\ \text{kN} = 112\ \text{kN} \qquad A_y = 33.95\ \text{kN} = 34.0\ \text{kN}$ **Ans.**

Substituting these results into Eq. (1),

$B_y = 33.95\ \text{kN} = 34.0\ \text{kN}$ **Ans.**

Ans:
$A_x = 0$, $F_C = 112$ kN, $A_y = 34.0$ kN, $B_y = 34.0$ kN

12–111. Determine the moment reactions at the supports A and B. EI is constant.

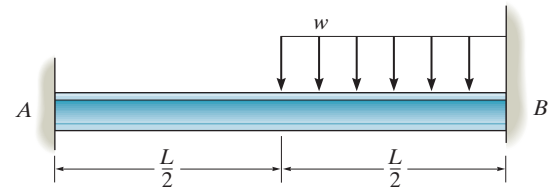

$$\theta_{B/A} = 0 = \frac{1}{2}\left(\frac{A_y L}{EI}\right)(L) + \left(\frac{-M_A}{EI}\right)(L) + \frac{1}{3}\left(\frac{-wL^2}{8EI}\right)\left(\frac{L}{2}\right)$$

$$0 = \frac{A_y L}{2} - M_A - \frac{wL^2}{48} \qquad (2)$$

$$t_{B/A} = 0 = \frac{1}{2}\left(\frac{A_y L}{EI}\right)(L)\left(\frac{L}{3}\right) + \left(\frac{-M_A}{EI}\right)(L)\left(\frac{L}{2}\right) + \frac{1}{3}\left(\frac{-wL^2}{8EI}\right)\left(\frac{L}{2}\right)\left(\frac{L}{8}\right)$$

$$0 = \frac{A_y L}{6} - \frac{M_A}{2} - \frac{wL^2}{384} \qquad (3)$$

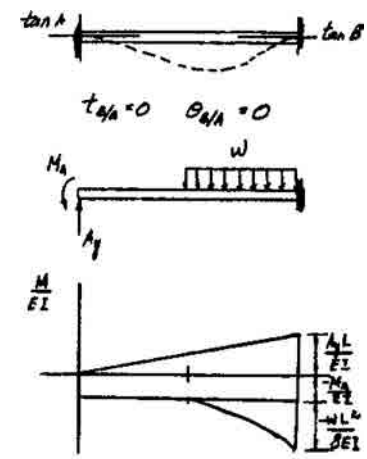

Solving Eqs. (2) and (3) yields:

$$A_y = \frac{3wL}{32}$$

$$M_A = \frac{5wL^2}{192} \qquad \textbf{Ans.}$$

$$\circlearrowleft + \Sigma M_B = 0; \quad M_B + \frac{3wL}{32}(L) - \frac{5wL^2}{192} - \frac{wL}{2}\left(\frac{L}{4}\right) = 0$$

$$M_B = \frac{11wL^2}{192} \qquad \textbf{Ans.}$$

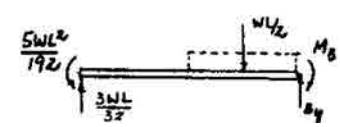

Ans:

$$M_A = \frac{5wL^2}{192}, M_B = \frac{11wL^2}{192}$$

***12–112.** Determine the moment reactions at the supports, and then draw the shear and moment diagrams. EI is constant.

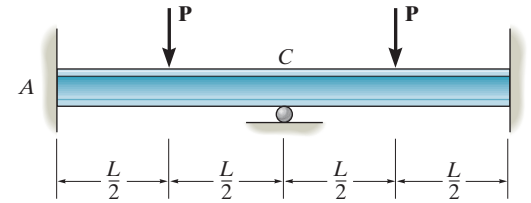

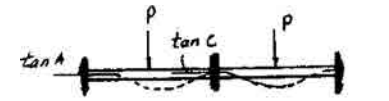

$$\theta_{C/A} = 0 = \frac{1}{2}\left(\frac{A_y L}{EI}\right)(L) + \left(\frac{-M_A}{EI}\right)(L) + \frac{1}{2}\left(\frac{-PL}{2EI}\right)\left(\frac{L}{2}\right)$$

$$0 = \frac{1}{2}A_y L - M_A - \frac{PL}{8} \qquad (1)$$

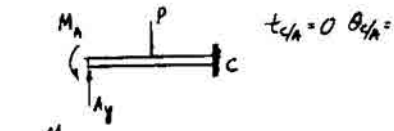

$$t_{C/A} = 0 = \frac{1}{2}\left(\frac{A_y L}{EI}\right)(L)\left(\frac{L}{3}\right) + \left(\frac{-M_A}{EI}\right)(L)\left(\frac{L}{2}\right) + \frac{1}{2}\left(\frac{-PL}{2EI}\right)\left(\frac{L}{2}\right)\left(\frac{L}{6}\right)$$

$$0 = \frac{A_y L}{6} - \frac{M_A}{2} - \frac{PL}{48} \qquad (2)$$

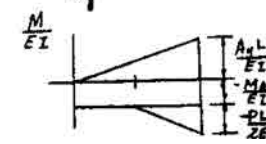

Solving Eqs. (1) and (2) yields:

$$A_y = \frac{P}{2} \qquad \textbf{Ans.}$$

$$M_A = \frac{PL}{8} \qquad \textbf{Ans.}$$

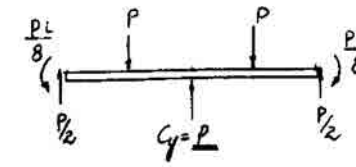

Due to symmetry:

$$B_y = \frac{P}{2} \qquad \textbf{Ans.}$$

$$M_B = \frac{PL}{8} \qquad \textbf{Ans.}$$

$$C_y = P \qquad \textbf{Ans.}$$

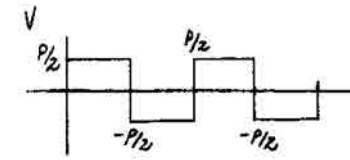

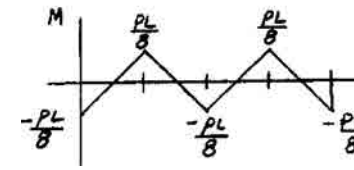

12–113. Determine the reactions at the bearing support A and fixed support B, then draw the shear and moment diagrams for the beam. EI is constant.

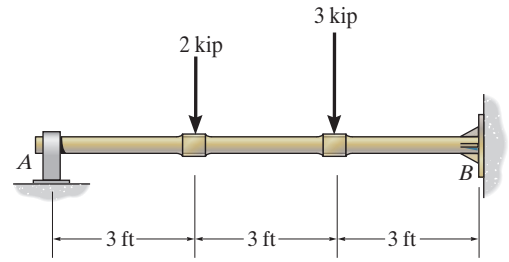

Equations of Equilibrium. Referring to the free-body diagram of the shaft, Fig. a,

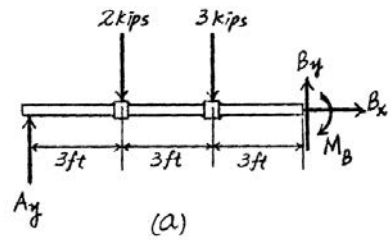

$\overset{+}{\rightarrow} \Sigma F_x = 0;$ $\quad B_x = 0$ **Ans.**

$+\uparrow \Sigma F_y = 0;$ $\quad A_y + B_y - 2 - 3 = 0$ (1)

$\circlearrowleft + \Sigma M_B = 0;$ $\quad 3(3) + 2(6) - A_y(9) - M_B = 0$

$M_B = 21 - 9A_y$ (2)

Elastic Curve and $\frac{M}{EI}$ Diagram

As shown in Fig. b, the $\frac{M}{EI}$ diagrams for 2 kip and 3 kip and A_y on the catilever beam are drawn separately.

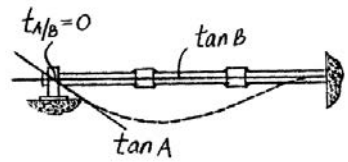

Moment Area Theorems. From the elastic curve, notice that $t_{A/B} = 0$. Thus,

$$t_{A/B} = 0 = \left[3 + \frac{2}{3}(3)\right]\left[\frac{1}{2}\left(-\frac{6}{EI}\right)(3)\right] + \left[6 + \frac{2}{3}(3)\right]\left[\frac{1}{2}\left(-\frac{15}{EI}\right)(3)\right] + \left[6 + \frac{1}{2}(3)\right]\left[-\frac{6}{EI}(3)\right] + \left[\frac{2}{3}(9)\right]\left[\frac{1}{2}\left(\frac{9A_y}{EI}\right)(9)\right]$$

$A_y = 1.4815 \text{ kip} = 1.48 \text{ kip}$ **Ans.**

Substituting this result into Eqs. (1) and (2),

$B_y = 3.5185 \text{ kip} = 3.52 \text{ kip}$ **Ans.**

$M_B = 7.6667 \text{ kip} \cdot \text{ft} = 7.67 \text{ kip} \cdot \text{ft}$ **Ans.**

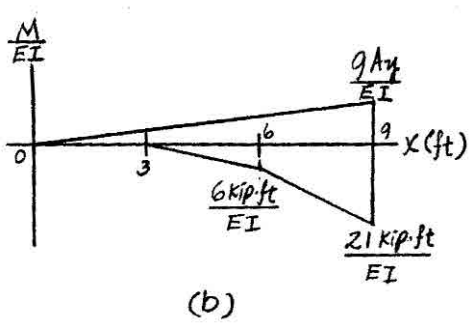

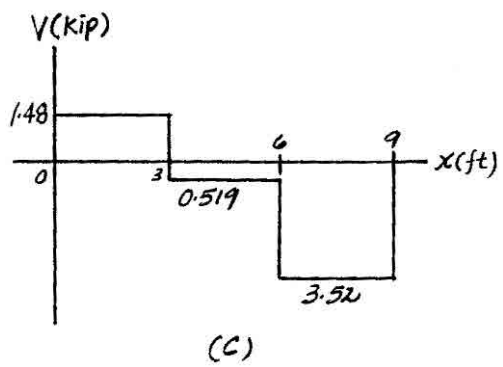

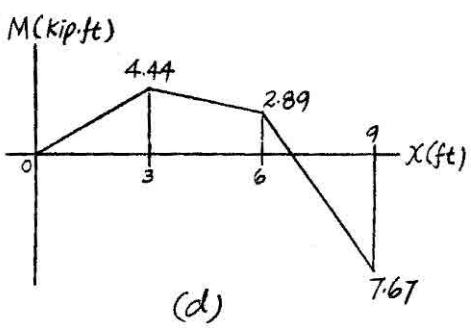

Ans:
$A_y = 1.48$ kip, $B_x = 0$, $B_y = 3.52$ kip,
$M_B = 7.67$ kip · ft

12–114. Determine the reactions at the supports A and B, then draw the shear and moment diagrams. EI is constant.

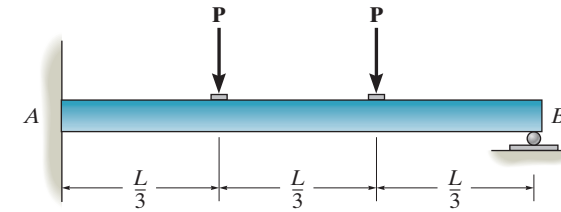

$$(t_{B/A})_1 = \frac{1}{2}\left(\frac{-PL}{3EI}\right)\left(\frac{L}{3}\right)\left(\frac{2L}{3} + \frac{2L}{9}\right) + \frac{1}{2}\left(\frac{-2PL}{3EI}\right)\left(\frac{2L}{3}\right)\left(\frac{L}{3} + \frac{4L}{9}\right) = -\frac{2PL^3}{9EI}$$

$$(t_{B/A})_2 = \frac{1}{2}\left(\frac{B_yL}{EI}\right)(L)\left(\frac{2L}{3}\right) = \frac{B_yL^3}{3EI}$$

$$t_{B/A} = 0 = (t_{B/A})_1 + (t_{B/A})_2$$

$$0 = -\frac{2PL^3}{9EI} + \frac{B_yL^3}{3EI}$$

$$B_y = \frac{2}{3}P \qquad \textbf{Ans.}$$

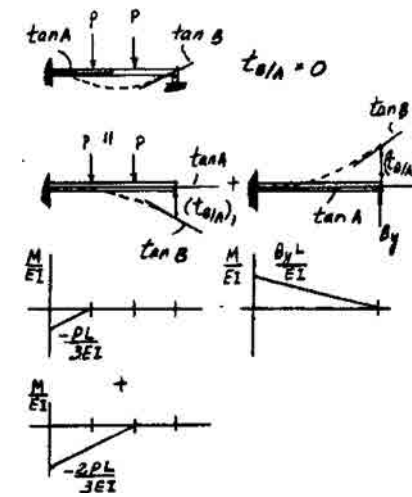

From the free-body diagram,

$$M_A = \frac{PL}{3} \qquad \textbf{Ans.}$$

$$A_y = \frac{4}{3}P \qquad \textbf{Ans.}$$

$$A_x = 0 \qquad \textbf{Ans.}$$

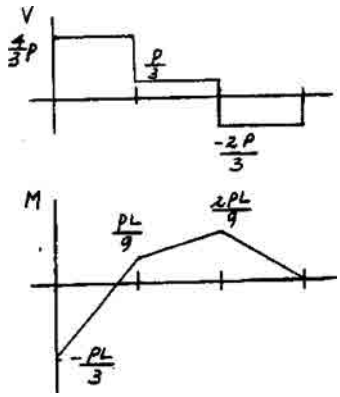

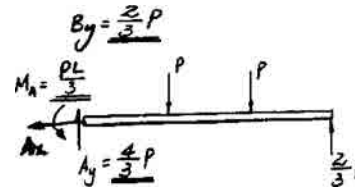

Ans:

$B_y = \frac{2}{3}P$, $M_A = \frac{PL}{3}$, $A_y = \frac{4}{3}P$, $A_x = 0$

12–115. Determine the vertical reactions at the bearings supports, then draw the shear and moment diagrams. EI is constant.

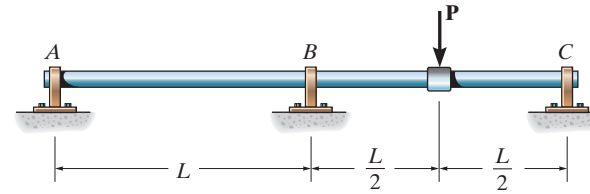

Support Reactions: FBD(a).

$\xrightarrow{+} \Sigma F_x = 0; \qquad B_x = 0$ **Ans.**

$+\uparrow \Sigma F_y = 0; \qquad -A_y + B_y + C_y - P = 0$ [1]

$\circlearrowleft + \Sigma M_A = 0; \qquad B_y(L) + C_y(2L) - P\left(\frac{3L}{2}\right) = 0$ [2]

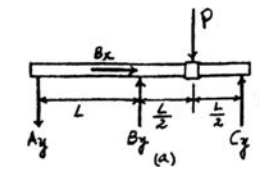

Elastic Curve: As shown.

M/EI Diagrams: M/EI diagrams for P and B_y acting on a simply supported beam are drawn separately.

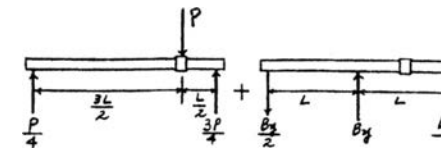

Moment-Area Theorems:

$$(t_{A/C})_1 = \frac{1}{2}\left(\frac{3PL}{8EI}\right)\left(\frac{3L}{2}\right)\left(\frac{2}{3}\right)\left(\frac{3L}{2}\right) + \frac{1}{2}\left(\frac{3PL}{8EI}\right)\left(\frac{L}{2}\right)\left(\frac{3L}{2} + \frac{L}{6}\right)$$

$$= \frac{7PL^3}{16EI}$$

$$(t_{A/C})_2 = \frac{1}{2}\left(-\frac{B_y L}{2EI}\right)(2L)(L) = -\frac{B_y L^3}{2EI}$$

$$(t_{B/C})_1 = \frac{1}{2}\left(\frac{PL}{8EI}\right)\left(\frac{L}{2}\right)\left(\frac{2}{3}\right)\left(\frac{L}{2}\right) + \left(\frac{PL}{4EI}\right)\left(\frac{L}{2}\right)\left(\frac{L}{4}\right) + \frac{1}{2}\left(\frac{3PL}{8EI}\right)\left(\frac{L}{2}\right)\left(\frac{L}{2} + \frac{L}{6}\right)$$

$$= \frac{5PL^3}{48EI}$$

$$(t_{B/C})_2 = \frac{1}{2}\left(-\frac{B_y L}{2EI}\right)(L)\left(\frac{L}{3}\right) = -\frac{B_y L^3}{12EI}$$

$$t_{A/C} = (t_{A/C})_1 + (t_{A/C})_2 = \frac{7PL^3}{16EI} - \frac{B_y L^3}{2EI}$$

$$t_{B/C} = (t_{B/C})_1 + (t_{B/C})_2 = \frac{5PL^3}{48EI} - \frac{B_y L^3}{12EI}$$

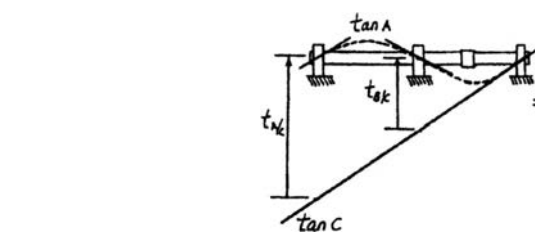

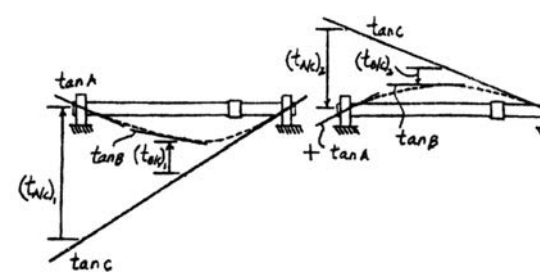

From the elastic curve,

$$t_{A/C} = 2t_{B/C}$$

$$\frac{7PL^3}{16EI} - \frac{B_y L^3}{2EI} = 2\left(\frac{5PL^3}{48EI} - \frac{B_y L^3}{12EI}\right)$$

$$B_y = \frac{11P}{16}$$ **Ans.**

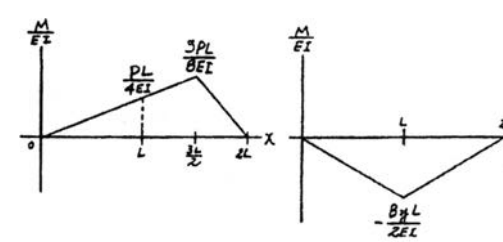

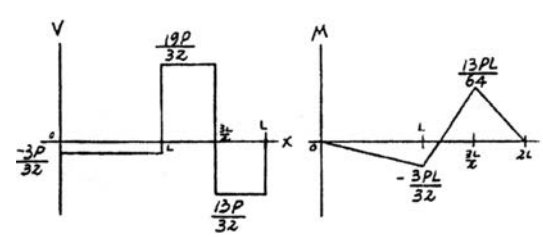

Substituting B_y into Eqs. [1] and [2] yields,

$$C_y = \frac{13P}{32} \qquad A_y = \frac{3P}{32}$$ **Ans.**

Ans:

$$B_y = \frac{11P}{16},\ C_y = \frac{13P}{32},\ A_y = \frac{3P}{32}$$

***12–116.** Determine the reactions at the journal bearing support A and fixed support B, then draw the shear and moment diagrams for the shaft. EI is constant.

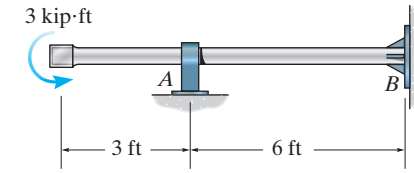

Equations of Equilibrium. Referring to the free-body diagram of the shaft, Fig. *a*,

$\xrightarrow{+} \Sigma F_x = 0;$ $\quad B_x = 0$ **Ans.**

$+\uparrow \Sigma F_y = 0;$ $\quad A_y - B_y = 0$ (1)

$+\Sigma M_B = 0;$ $\quad 3 + M_B - A_y(6) = 0$

$M_B = 6A_y - 3$ (2)

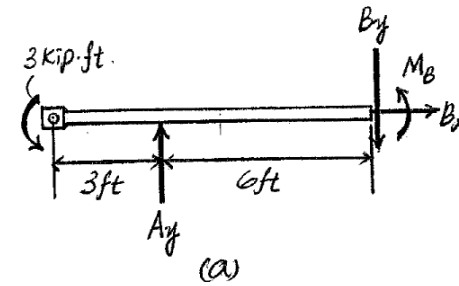

Elastic Curve and $\frac{M}{EI}$ Diagram. As shown in Fig. *b*, the $\frac{M}{EI}$ diagrams for the 3 kip · ft couple moment and $\mathbf{A}_y$ are drawn separately.

Moment Area Theorems. From the elastic curve, notice that $t_{A/B} = 0$. Thus,

$$t_{A/B} = 0 = \left[\frac{1}{2}(6)\right]\left[\left(-\frac{3}{EI}\right)(6)\right] + \left[\frac{2}{3}(6)\right]\left[\frac{1}{2}\left(\frac{6A_y}{EI}\right)(6)\right]$$

$A_y = 0.75$ kip **Ans.**

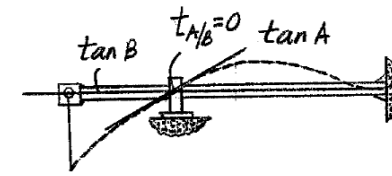

Substituting the result of $\mathbf{A}_y$ into Eqs. (1) and (2),

$B_y = 0.75$ kip $\qquad M_B = 1.5$ kip · ft **Ans.**

The shear and moment diagrams are shown in Figs. *c* and *d*, respectively.

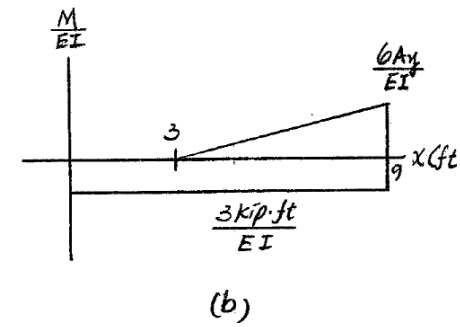

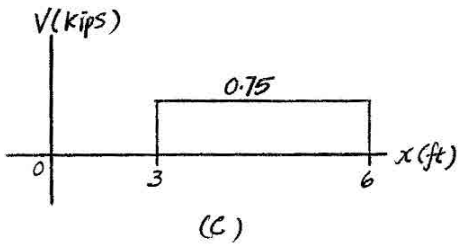

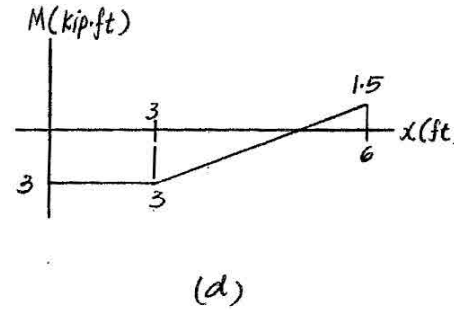

12–117. Determine the reactions at the bearing supports A, B, and C of the shaft, then draw the shear and moment diagrams. EI is constant. Each bearing exerts only vertical reactions on the shaft.

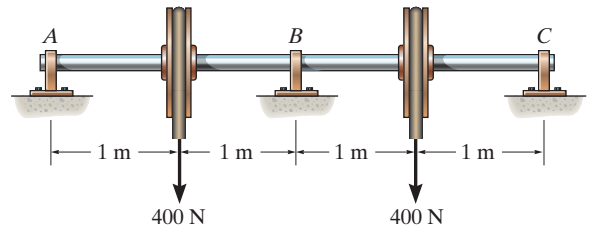

Support Reactions: FBD(a).

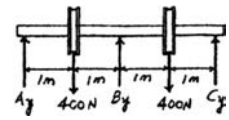

$$+\uparrow \Sigma F_y = 0; \qquad A_y + B_y + C_y - 800 = 0 \qquad [1]$$

$$\circlearrowleft + \Sigma M_A = 0; \qquad B_y(2) + C_y(4) - 400(1) - 400(3) = 0 \qquad [2]$$

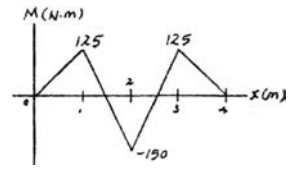

Method of Superposition: Using the table in Appendix C, the required displacements are

$$v_B' = \frac{Pbx}{6EIL}\left(L^2 - b^2 - x^2\right)$$

$$= \frac{400(1)(2)}{6EI(4)}\left(4^2 - 1^2 - 2^2\right)$$

$$= \frac{366.67\ \text{N}\cdot\text{m}^3}{EI} \quad \downarrow$$

$$v_B'' = \frac{PL^3}{48EI} = \frac{B_y\left(4^3\right)}{48EI} = \frac{1.3333B_y\,\text{m}^3}{EI} \quad \uparrow$$

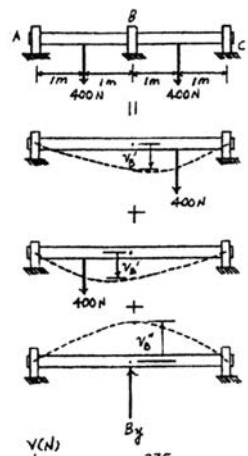

The compatibility condition requires

$$(+\downarrow) \qquad 0 = 2v_B' + v_B''$$

$$0 = 2\left(\frac{366.67}{EI}\right) + \left(-\frac{1.3333B_y}{EI}\right)$$

$$B_y = 550\ \text{N} \qquad \textbf{Ans.}$$

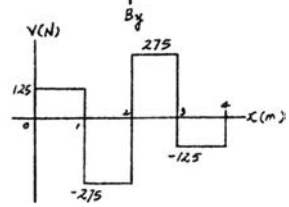

Substituting B_y into Eqs. [1] and [2] yields,

$$A_y = 125\ \text{N} \qquad C_y = 125\ \text{N} \qquad \textbf{Ans.}$$

Ans:
$B_y = 550$ N, $A_y = 125$ N, $C_y = 125$ N

12–118. Determine the reactions at the supports A and B. EI is constant.

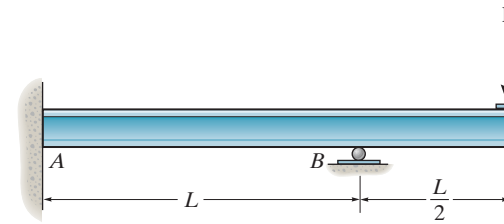

Referring to the FBD of the beam, Fig. *a*

$\xrightarrow{+} \Sigma F_x = 0; \qquad A_x = 0$ **Ans.**

$+\uparrow \Sigma F_y = 0; \qquad B_y - P - A_y = 0$

$$A_y = B_y - P \qquad (1)$$

$\circlearrowleft + \Sigma M_A = 0; \; -M_A + B_y L - P\left(\frac{3}{2}L\right) = 0$

$$M_A = B_y L - \frac{3}{2}PL \qquad (2)$$

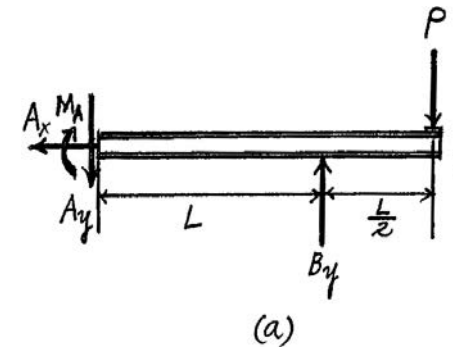

Referring to Fig. *b* and the table in Appendix *C*, the necessary deflections at B are computed as follow:

$$v_P = \frac{Px^2}{6EI}(3L_{AC} - x)$$

$$= \frac{P(L^2)}{6EI}\left[3\left(\frac{3}{2}L\right) - L\right]$$

$$= \frac{7PL^3}{12EI} \quad \downarrow$$

$$v_{B_y} = \frac{PL_{AB}^3}{3EI} = \frac{B_y L^3}{3EI} \quad \uparrow$$

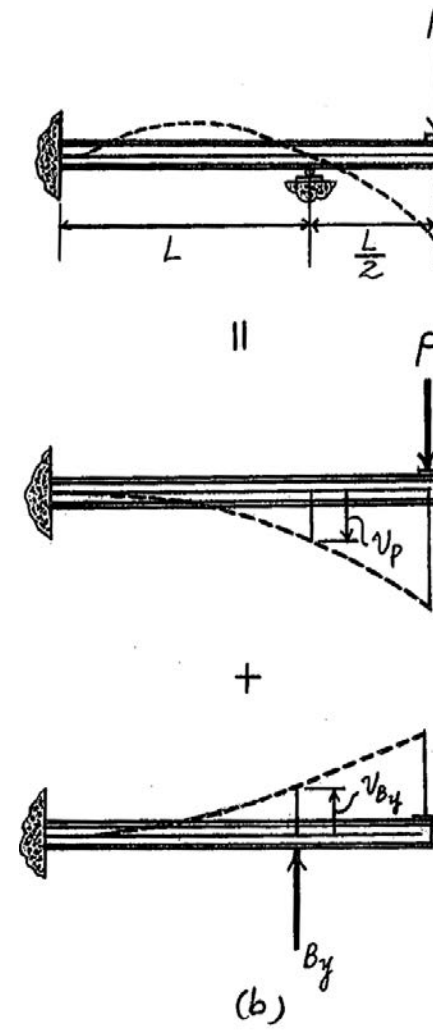

The compatibility condition at support B requires that

$(+\downarrow) \qquad 0 = v_P + v_{B_y}$

$$0 = \frac{7PL^3}{12EI} + \left(\frac{-B_y L^3}{3EI}\right)$$

$$B_y = \frac{7P}{4}$$ **Ans.**

Substitute this result into Eq (1) and (2)

$$A_y = \frac{3P}{4} \qquad M_A = \frac{PL}{4}$$ **Ans.**

Ans:

$A_x = 0, B_y = \frac{7P}{4}, A_y = \frac{3P}{4}, M_A = \frac{PL}{4}$

12–119. Determine the reactions at the supports A, B, and C, then draw the shear and moment diagrams. EI is constant.

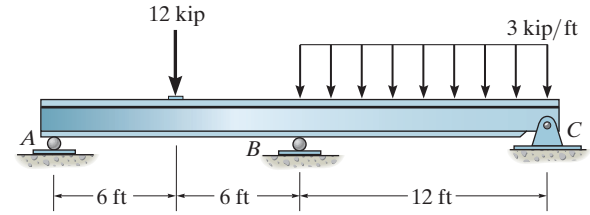

Support Reaction: FBD(b).

$\xrightarrow{+} \Sigma F_x = 0; \qquad C_x = 0$ **Ans.**

$+\uparrow \Sigma F_y = 0; \qquad A_y + B_y + C_y - 12 - 36.0 = 0$ [1]

$\circlearrowleft + \Sigma M_A = 0; \qquad B_y(12) + C_y(24) - 12(6) - 36.0(18) = 0$ [2]

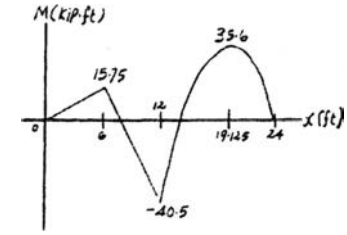

Method of Superposition: Using the table in Appendix C, the required displacements are

$$v_B' = \frac{5wL^4}{768EI} = \frac{5(3)(24^4)}{768EI} = \frac{6480 \text{ kip}\cdot\text{ft}^3}{EI} \quad \downarrow$$

$$v_B'' = \frac{Pbx}{6EIL}\left(L^2 - b^2 - x^2\right)$$

$$= \frac{12(6)(12)}{6EI(24)}\left(24^2 - 6^2 - 12^2\right) = \frac{2376 \text{ kip}\cdot\text{ft}^3}{EI} \quad \downarrow$$

$$v_B''' = \frac{PL^3}{48EI} = \frac{B_y(24^3)}{48EI} = \frac{288B_y \text{ ft}^3}{EI} \quad \uparrow$$

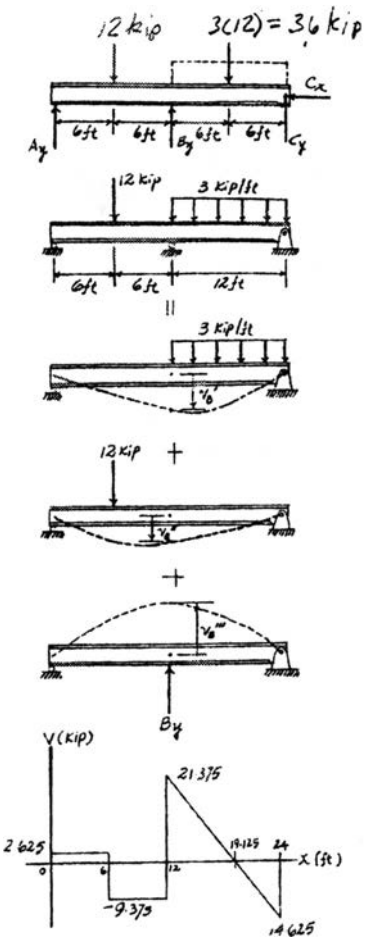

The compatibility condition requires

$(+\downarrow) \qquad 0 = v_B' + v_B'' + v_B'''$

$$0 = \frac{6480}{EI} + \frac{2376}{EI} + \left(-\frac{288B_y}{EI}\right)$$

$B_y = 30.75$ kip **Ans.**

Substituting B_y into Eqs. [1] and [2] yields,

$A_y = 2.625$ kip $\qquad C_y = 14.6$ kip **Ans.**

Ans:
$C_x = 0$, $B_y = 30.75$ kip, $A_y = 2.625$ kip, $C_y = 14.6$ kip

***12–120.** Determine the moment reactions at the supports A and B. EI is constant.

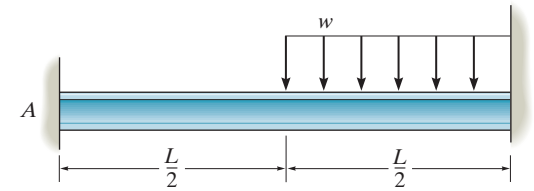

$$\theta_{B/A} = 0 = \frac{1}{2}\left(\frac{A_y L}{EI}\right)(L) + \left(\frac{-M_A}{EI}\right)(L) + \frac{1}{3}\left(\frac{-wL^2}{8EI}\right)\left(\frac{L}{2}\right)$$

$$0 = \frac{A_y L}{2} - M_A - \frac{wL^2}{48} \qquad (1)$$

$$t_{B/A} = 0 = \frac{1}{2}\left(\frac{A_y L}{EI}\right)(L)\left(\frac{L}{3}\right) + \left(\frac{-M_A}{EI}\right)(L)\left(\frac{L}{2}\right) + \frac{1}{3}\left(\frac{-wL^2}{8EI}\right)\left(\frac{L}{2}\right)\left(\frac{L}{8}\right)$$

$$0 = \frac{A_y L}{6} - \frac{M_A}{2} - \frac{wL^2}{384} \qquad (2)$$

Solving Eqs. (1) and (2) yields:

$$A_y = \frac{3wL}{32}$$

$$M_A = \frac{5wL^2}{192} \qquad \textbf{Ans.}$$

$$\circlearrowleft + \Sigma M_B = 0; \qquad M_B + \frac{3wL}{32}(L) - \frac{5wL^2}{192} - \frac{wL}{2}\left(\frac{L}{4}\right) = 0$$

$$M_B = \frac{11wL^2}{192} \qquad \textbf{Ans.}$$

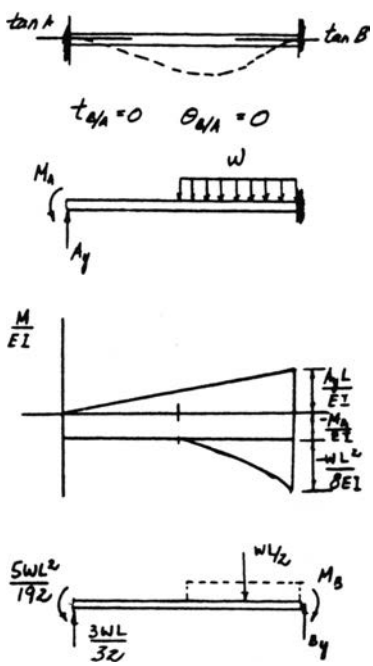

12–121. Determine the deflection at the end B of the clamped A-36 steel strip. The spring has a stiffness of $k = 2$ N/mm. The strip is 5 mm wide and 10 mm high. Also, draw the shear and moment diagrams for the strip.

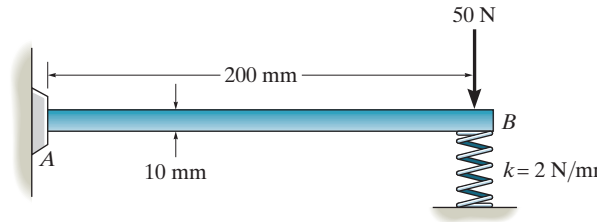

$$I = \frac{1}{12}(0.005)(0.01)^3 = 0.4166\,(10^{-9})\ \text{m}^4$$

$$(\Delta_B)_1 = \frac{PL^3}{3EI} = \frac{50(0.2^3)}{3(200)(10^9)(0.4166)(10^{-9})} = 0.0016\ \text{m}$$

$$(\Delta_B)_2 = \frac{PL^3}{3EI} = \frac{2000\Delta_B(0.2^3)}{3(200)(10^9)(0.4166)(10^{-9})} = 0.064\ \Delta_B$$

Compatibility Condition:

$+\downarrow \qquad \Delta_B = (\Delta_B)_1 - (\Delta_B)_2$

$\Delta_B = 0.0016 - 0.064\Delta_B$

$\Delta_B = 0.001504\ \text{m} = 1.50\ \text{mm}$ **Ans.**

$B_y = k\Delta_B = 2(1.5) = 3.01\ \text{N}$

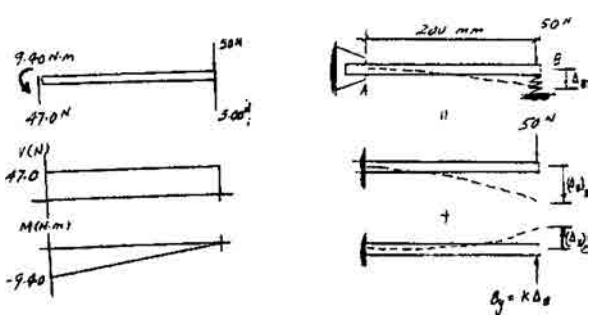

Ans:
$\Delta_B = 1.50\ \text{mm}\downarrow$

12–122. Determine the reactions at the supports A and B. EI is constant.

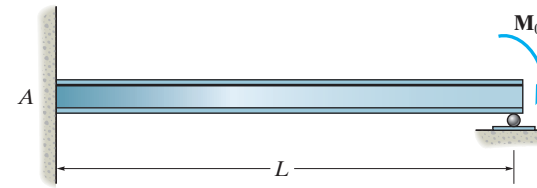

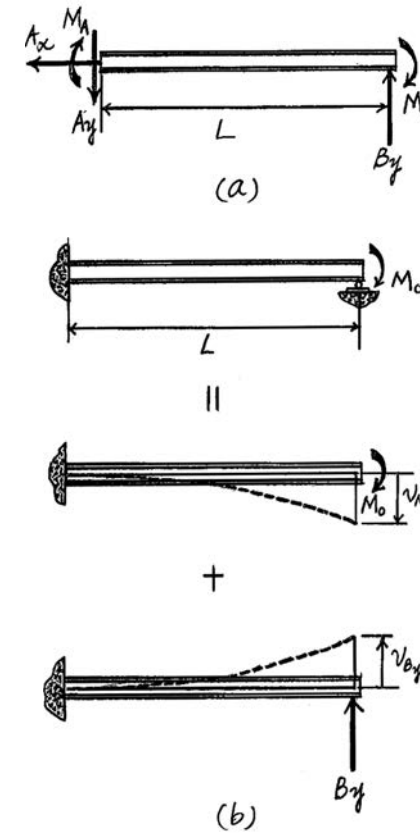

Referring to the FBD of the beam, Fig. a,

$\xrightarrow{+} \Sigma F_x = 0; \qquad A_x = 0$ **Ans.**

$+\uparrow \Sigma F_y = 0; \qquad B_y - A_y = 0$ (1)

$\circlearrowleft + \Sigma M_A = 0; \qquad B_y(L) - M_0 - M_A = 0$

$M_A = B_y L - M_0$ (2)

Referring to Fig. b and the table in the appendix, the necessary deflections are:

$$v_{M_0} = \frac{M_0 L^2}{2EI} \quad \downarrow$$

$$v_{B_y} = \frac{PL^3}{3EI} = \frac{B_y L^3}{3EI} \quad \uparrow$$

Compatibility condition at roller support B requires

$(+\downarrow) \qquad 0 = v_{M_0} + (v_B)_y$

$$0 = \frac{M_0 L^2}{2EI} + \left(-\frac{B_y L^3}{3EI}\right)$$

$$B_y = \frac{3M_0}{2L}$$ **Ans.**

Substitute this result into Eq. (1) and (2)

$$A_y = \frac{3M_0}{2L} \qquad M_A = \frac{M_0}{2}$$ **Ans.**

Ans:

$A_x = 0, B_y = \dfrac{3M_0}{2L}, A_y = \dfrac{3M_0}{2L}, M_A = \dfrac{M_0}{2}$

12–123. Determine the reactions at support C. EI is the same for both beams.

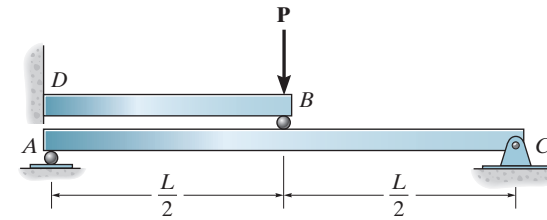

Support Reactions: FBD (a).

$\xrightarrow{+} \Sigma F_x = 0; \qquad C_x = 0$ **Ans.**

$\circlearrowleft + \Sigma M_A = 0; \qquad C_y(L) - B_y\left(\frac{L}{2}\right) = 0$ [1]

Method of Superposition: Using the table in Appendix C, the required displacements are

$$v_B = \frac{PL^3}{48EI} = \frac{B_y L^3}{48EI} \quad \downarrow$$

$$v_B' = \frac{PL_{BD}^3}{3EI} = \frac{P\left(\frac{L}{2}\right)^3}{3EI} = \frac{PL^3}{24EI} \quad \downarrow$$

$$v_B'' = \frac{PL_{BD}^3}{3EI} = \frac{B_y L^3}{24EI} \quad \uparrow$$

The compatibility condition requires

$(+\downarrow) \qquad v_B = v_B' + v_B''$

$$\frac{B_y L^3}{48EI} = \frac{PL^3}{24EI} + \left(-\frac{B_y L^3}{24EI}\right)$$

$$B_y = \frac{2P}{3}$$

Substituting B_y into Eq. [1] yields,

$$C_y = \frac{P}{3}$$ **Ans.**

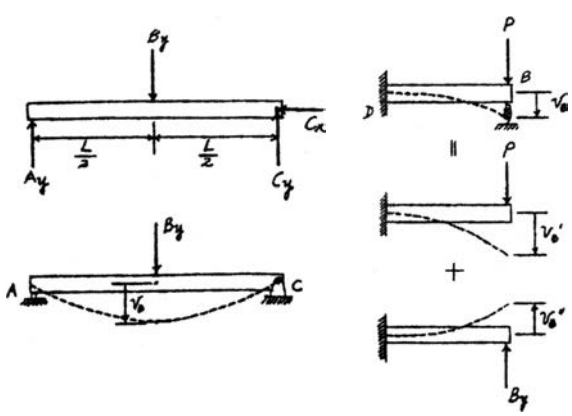

Ans:

$C_x = 0, C_y = \frac{P}{3}$

***12–124.** Before the uniform distributed load is applied on the beam, there is a small gap of 0.2 mm between the beam and the post at B. Determine the support reactions at A, B, and C. The post at B has a diameter of 40 mm, and the moment of inertia of the beam is $I = 875(10^6)\ \text{mm}^4$. The post and the beam are made of material having a modulus of elasticity of $E = 200$ GPa.

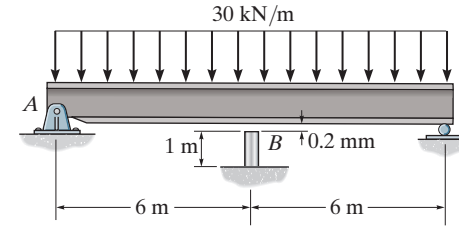

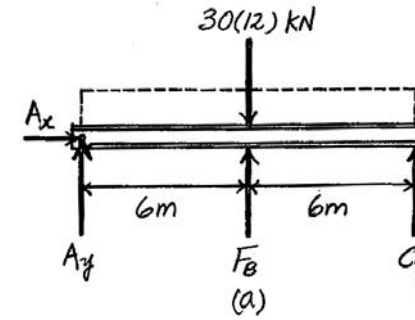

Equations of Equilibrium. Referring to the free-body diagram of the beam, Fig. *a*,

$\xrightarrow{+} \Sigma F_x = 0; \qquad A_x = 0$ **Ans.**

$+\uparrow \Sigma F_y = 0; \qquad A_y + F_B + C_y - 30(12) = 0 \qquad (1)$

$\circlearrowleft + \Sigma M_A = 0; \qquad F_B(6) + C_y(12) - 30(12)(6) = 0 \qquad (2)$

Method of Superposition: Referring to Fig. *b* and the table in the Appendix, the necessary deflections are

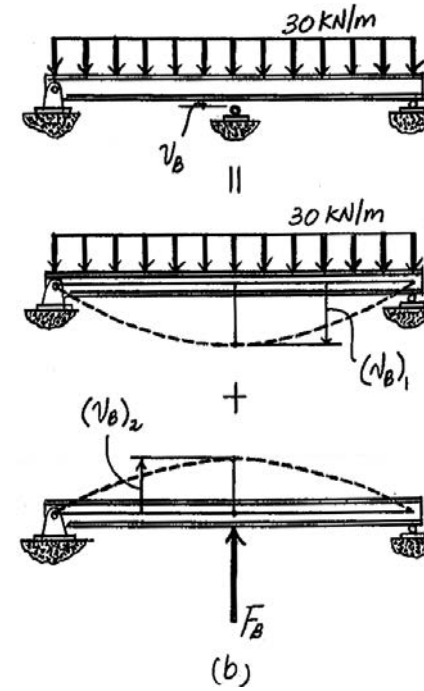

$$(v_B)_1 = \frac{5wL^4}{384EI} = \frac{5(30)(12^4)}{384EI} = \frac{8100\ \text{kN}\cdot\text{m}^3}{EI} \downarrow$$

$$(v_B)_2 = \frac{PL^3}{48EI} = \frac{F_B(12^3)}{48EI} = \frac{36F_B}{EI} \uparrow$$

The deflection of point B is

$$v_B = 0.2(10^{-3}) + \frac{F_B L_B}{AE} = 0.2(10^{-3}) + \frac{F_B(1)}{AE} \downarrow$$

The compatibility condition at support B requires

$$(+\downarrow) \qquad v_B = (v_B)_1 + (v_B)_2$$

$$0.2(10^{-3}) + \frac{F_B(1)}{AE} = \frac{8100}{EI} + \left(-\frac{36F_B}{EI}\right)$$

$$0.2(10^{-3})E + \frac{F_B}{A} = \frac{8100}{I} - \frac{36F_B}{I}$$

$$\frac{F_B}{\frac{\pi}{4}(0.04^2)} + \frac{36F_B}{875(10^{-6})} = \frac{8100}{875(10^{-6})} - \frac{0.2(10^{-3})[200(10^9)]}{1000}$$

$F_B = 219.78\ \text{kN} = 220\ \text{kN}$ **Ans.**

Substituting the result of F_B into Eqs. (1) and (2),

$A_y = C_y = 70.11\ \text{kN} = 70.1\ \text{kN}$ **Ans.**

12–125. The fixed supported beam AB is strengthened using the simply supported beam CD and the roller at F which is set in place just before application of the load **P**. Determine the reactions at the supports if EI is constant.

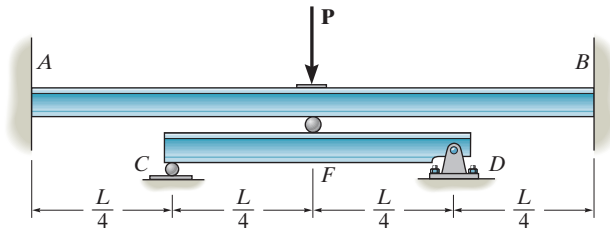

δ_F = Deflection of top beam at F

δ'_F = Deflection of bottom beam at F

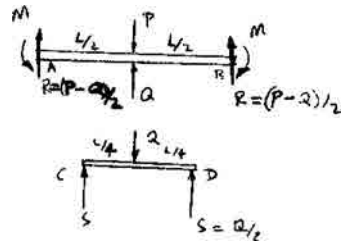

$$\delta_F = \delta'_F$$

$$(+\downarrow)\ \frac{(P-Q)(L^3)}{48\,EI} - \frac{2M\left(\frac{L}{2}\right)}{6\,EIL}\left[L^2 - \left(\frac{L}{2}\right)^2\right] = \frac{Q\left(\frac{L}{2}\right)^3}{48EI}$$

$$\frac{(P-Q)L}{48} - \frac{1}{6}M\frac{3}{4} = \frac{QL}{48(8)}$$

$$8PL - 48M = 9QL \qquad (1)$$

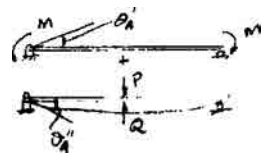

$$\theta_A = \theta'_A + \theta''_A = 0$$

$$\circlearrowleft + \quad -\frac{ML}{6EI} - \frac{ML}{3EI} + \frac{(P-Q)L^2}{16EI} = 0$$

$$8M = (P-Q)L \qquad (2)$$

Solving Eqs. (1) and (2):

$$M = QL/16$$
$$Q = 2P/3$$
$$S = P/3$$
$$R = P/6$$
$$M = PL/24$$

Thus,

$$M_A = M_B = \frac{1}{24}PL \qquad \textbf{Ans.}$$

$$A_y = B_y = \frac{1}{6}P \qquad \textbf{Ans.}$$

$$C_y = D_y = \frac{1}{3}P \qquad \textbf{Ans.}$$

Ans:

$M_A = M_B = \frac{1}{24}PL$, $A_y = B_y = \frac{1}{6}P$,

$C_y = D_y = \frac{1}{3}P$, $D_x = 0$

12–126. Determine the force in the spring. *EI* is constant.

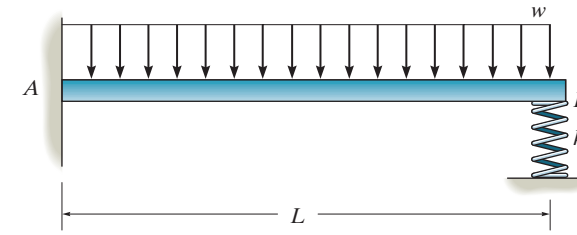

$$\Delta'_B = \frac{wL^4}{8EI}; \qquad \delta_B = \frac{F_{sp}L^3}{3EI}$$

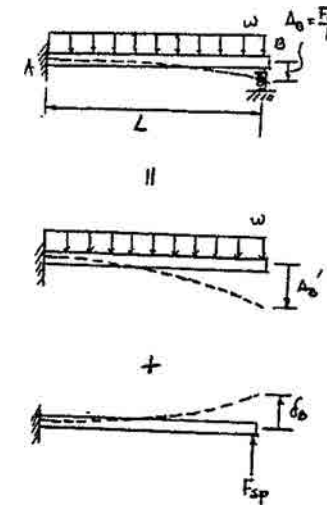

By Superposition:

$$+\downarrow \quad \Delta_B = \Delta'_B - \delta_B$$

$$\frac{F_{sp}}{k} = \frac{wL^4}{8EI} - \frac{F_{sp}L^3}{3EI}$$

$$\frac{24\,EIF_{sp}}{k} = 3wL^4 - 8F_{sp}L^3$$

$$\frac{24\,EIF_{sp}}{k} + 8F_{sp}L^3 = 3wL^4$$

$$F_{sp}\left[\frac{24EI + 8kL^3}{k}\right] = 3wL^4$$

$$F_{sp} = \frac{3kwL^4}{24EI + 8kL^3}$$ **Ans.**

Ans:

$$F_{sp} = \frac{3kwL^4}{24EI + 8kL^3}$$

12–127. The beam is supported by the bolted supports at its ends. When loaded these supports initially do not provide an actual fixed connection, but instead allow a slight rotation a before becoming fixed after the load is fully applied. Determine the moment at the connections and the maximum deflection of the beam.

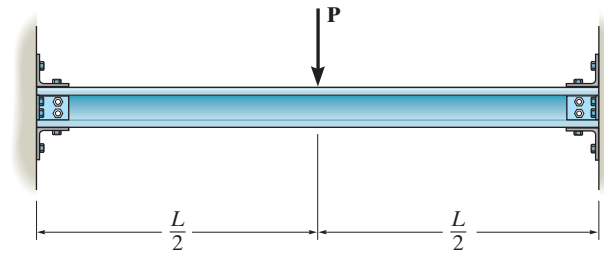

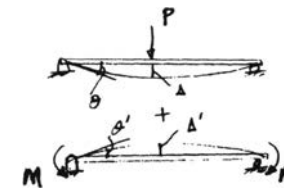

$$\theta - \theta' = \alpha$$

$$\frac{PL^2}{16EI} - \frac{ML}{3EI} - \frac{ML}{6EI} = \alpha$$

$$ML = \left(\frac{PL^2}{16EI} - \alpha\right)(2EI)$$

$$M = \frac{PL}{8} - \frac{2EI}{L}\alpha \qquad \textbf{Ans.}$$

$$\Delta_{\max} = \Delta - \Delta' = \frac{PL^3}{48EI} - 2\left[\frac{M(\frac{L}{2})}{6EIL}\left[L^2 - (L/2)^2\right]\right]$$

$$\Delta_{\max} = \frac{PL^3}{48EI} - \frac{L^2}{8EI}\left(\frac{PL}{8} - \frac{2EI\alpha}{L}\right)$$

$$\Delta_{\max} = \frac{PL^3}{192EI} + \frac{\alpha L}{4} \qquad \textbf{Ans.}$$

Ans:

$$M = \frac{PL}{8} - \frac{2EI}{L}\alpha,\ \Delta_{\max} = \frac{PL^3}{192EI} + \frac{\alpha L}{4}$$

***12–128.** Each of the two members is made from 6061-T6 aluminum and has a square cross section 1 in. × 1 in. They are pin connected at their ends and a jack is placed between them and opened until the force it exerts on each member is 50 lb. Determine the greatest force P that can be applied to the center of the top member without causing either of the two members to yield. For the analysis neglect the axial force in each member. Assume the jack is rigid.

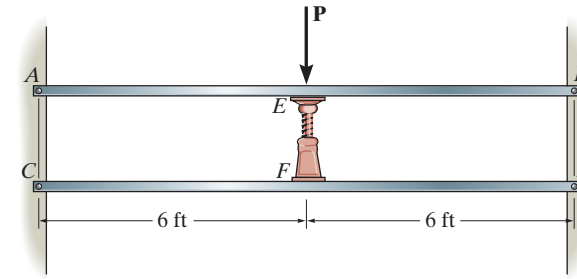

The jack force will cause a spread, Δ, between the bars. After P is applied, this spread is the difference between δ_E and δ_F.

$$\Delta = \delta_F - \delta_E$$

Let R be the final reaction force of the jack on the bar above and the bar below. From Appendix C,

$$2\left(\frac{50L^3}{48EI}\right) = \frac{RL^3}{48EI} - \frac{(P - R)L^3}{48EI}$$

$$R = \frac{P}{2} + 50$$

The bottom member will yield first, since it will be subject to greater deformation after P is applied. The moment due to the support reactions, $R/2$ at each end, is greatest in the middle:

$$M_{\max} = \frac{R}{2}\left(\frac{L}{2}\right) = \left(\frac{P}{4} + 25\right)(6)(12) = 18P + 1800$$

$$\sigma_{\max} = \frac{Mc}{I}$$

$$37(10^3) = \frac{(18P + 1800)\left(\frac{1}{2}\right)}{\frac{1}{12}(1)(1^3)}$$

$$P = 243 \text{ lb}$$ **Ans.**

12–129. The beam is made from a soft linear elastic material having a constant EI. If it is originally a distance Δ from the surface of its end support, determine the length a that rests on this support when it is subjected to the uniform load W_0, which is great enough to cause this to happen.

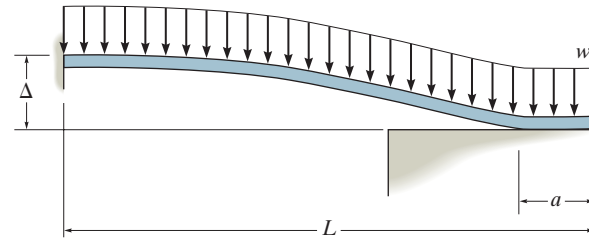

The curvature of the beam in region BC is zero, therefore there is no bending moment in the region BC. The reaction R is at B where it touches the support. The slope is zero at this point and the deflection is Δ where

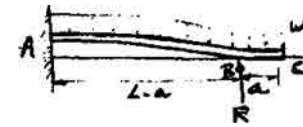

$$\Delta = \frac{w_0(L-a)^4}{8EI} - \frac{R(L-a)^3}{3EI}$$

$$\theta_x = 0 = \frac{w_0(L-a)^3}{6EI} - \frac{R(L-a)^2}{2EI}$$

Thus,

$$R = \frac{w_0(L-a)}{3}$$

$$\Delta = \frac{w_0(L-a)^4}{(72EI)}$$

$$L - a = \left(\frac{72\Delta EI}{w_0}\right)^{\frac{1}{4}}$$

$$a = L - \left(\frac{72\Delta EI}{w_0}\right)^{\frac{1}{4}}$$ **Ans.**

Ans:

$$a = L - \left(\frac{72\Delta EI}{w_o}\right)^{\frac{1}{4}}$$

12–130. The A992 steel beam and rod are used to support the load of 8 kip. If it is required that the allowable normal stress for the steel is $\sigma_{\text{allow}} = 18$ ksi, and the maximum deflection not exceed 0.05 in., determine the smallest diameter rod that should be used. The beam is rectangular, having a height of 5 in. and a thickness of 3 in.

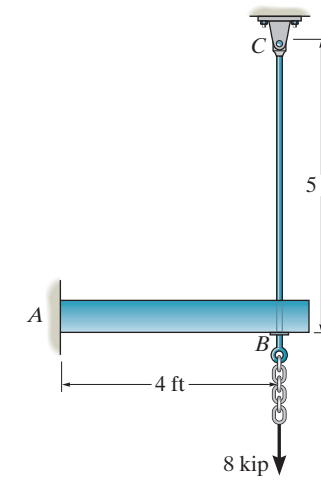

$\delta_r = \delta_b$

$$\frac{F(5)(12)}{AE} = \frac{(8 - F)(48)^3}{3E\left(\frac{1}{12}\right)(3)(5)^3}$$

Assume rod reaches its maximum stress.

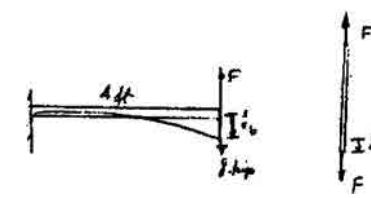

$$\sigma = \frac{F}{A} = 18(10^3)$$

$$\frac{18(5)(12)}{E} = \frac{1179.648(8 - F)}{E}$$

$$F = 7.084 \text{ kip}$$

Maximum stress in beam,

$$\sigma = \frac{Mc}{I} = \frac{(8 - 7.084)(48)(2.5)}{\frac{1}{12}(3)(5)^3} = 3.52 \text{ ksi} < 18 \text{ ksi} \qquad \text{OK}$$

Maximum deflection

$$\delta = \frac{PL^3}{3EI} = \frac{(8 - 7.084)(48)^3}{3(29)(10^3)\left(\frac{1}{12}\right)(3)(5)^3} = 0.0372 \text{ in.} < 0.05 \text{ in.} \qquad \text{OK}$$

Thus,

$$A = \frac{7.084}{18} = 0.39356 \text{ in}^2 = \frac{1}{4}\pi d^2$$

$$d = 0.708 \text{ in.} \qquad \textbf{Ans.}$$

Ans:
$d = 0.708$ in.

12–131. The 1-in.-diameter A-36 steel shaft is supported by bearings at A and C. The bearing at B rests on a simply supported A-36 steel wide-flange beam having a moment of inertia of $I = 500\ \text{in}^4$. If the belt loads on the pulley are 400 lb each, determine the vertical reactions at A, B, and C.

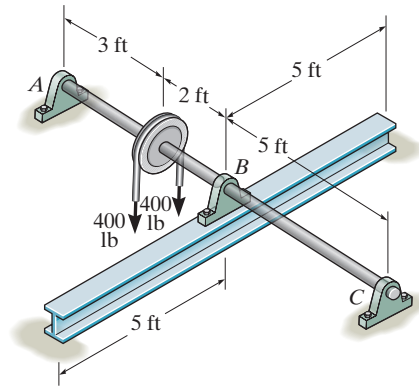

$E_s = E_b = E$

For the Shaft:

$$(\Delta_b)_1 = \frac{800(3)(5)}{6EI_s(10)}\left(-5^2 - 3^2 + 10^2\right) = \frac{13200}{EI_s} \downarrow$$

$$(\Delta_b)_2 = \frac{B_y\left(10^3\right)}{48EI_s} = \frac{20.833B_y}{EI_s} \uparrow$$

For the Beam:

$$\Delta_b = \frac{B_y\left(10^3\right)}{48EI_b} = \frac{20.833B_y}{EI_b} \downarrow$$

Compatibility Condition:

$$+\downarrow \Delta_b = (\Delta_b)_1 - (\Delta_b)_2$$

$$\frac{20.833B_y}{EI_b} = \frac{13200}{EI_s} - \frac{20.833B_y}{EI_s}$$

$$I_s = \frac{\pi}{4}(0.5)^4 = 0.04909\ \text{in}^4$$

$$\frac{20.833B_y\,(0.04909)}{500} = 13200 - 20.833B_y$$

$B_y = 634\ \text{lb} \uparrow$ **Ans.**

Form the free-body diagram,

$A_y = 243\ \text{lb} \uparrow$ **Ans.**

$C_y = 76.8\ \text{lb} \downarrow$ **Ans.**

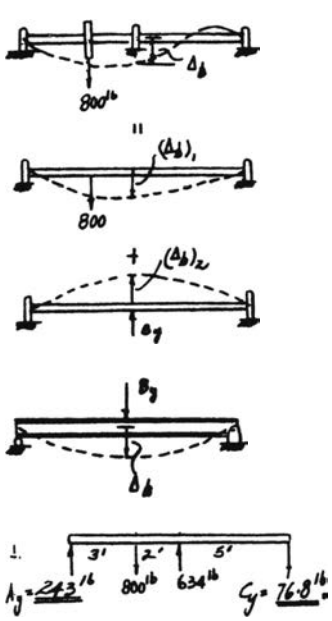

Ans:
$B_y = 634\ \text{lb}$, $A_y = 243\ \text{lb}$, $C_y = 76.8\ \text{lb}$

***12–132.** The assembly consists of three simply supported beams for which the bottom of the top beam rests on the top of the bottom two. If a uniform load of 3 kN/m is applied to the beam, determine the vertical reactions at each of the supports. *EI* is constant.

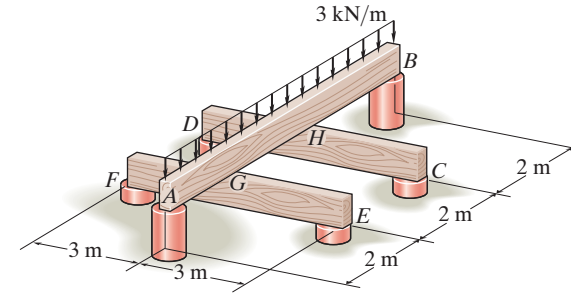

$$\delta_a = \delta_{a'}$$

$$\delta_a = \delta_1 + \delta_2 + \delta_3$$

$$\delta_1 = \frac{w(L/3)}{24EI}((L/3)^3 - 2L(L/3)^2 + L^3)$$

Set $L = 8\,\text{m}, w = 3\,\text{kN/m}$

$$\delta_1 = \frac{139.062}{EI} \downarrow$$

$$\delta_2 = \frac{P\left(\frac{1}{3}L\right)\left(\frac{1}{3}L\right)}{6EI(L)}\left(L^3 - \left(\frac{1}{3}L\right)^2 - \left(\frac{1}{3}L\right)^2\right)$$

Set $L = 8\,\text{m}, \quad P = R$

$$\delta_1 = \frac{7.374R}{EI} \uparrow$$

$$\delta_1 = \frac{P\left(\frac{2}{3}L\right)\left(\frac{1}{3}L\right)}{6EIL}\left(L^3 - \left(\frac{2}{3}L\right)^2 - \left(\frac{1}{3}L\right)^2\right)$$

Set $L = 8\,\text{m}, \quad P = R$

$$\delta_1 = \frac{8.428\,R}{EI} \uparrow$$

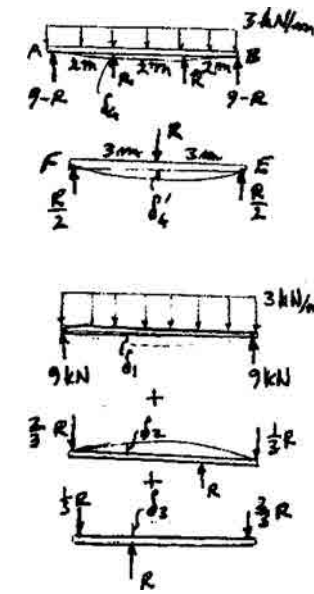

Thus,

$$\frac{139.062}{EI} - \frac{7.374\,R}{EI} - \frac{8.428\,R}{EI} = \frac{R(6)^3}{48\,EI}$$

$$R = 6.849\ \text{ksi}$$

Thus,

$$A_y = B_y = 9 - 6.849 = 2.15\ \text{kN}$$ **Ans.**

12–133. The shaft supports the two pulley loads shown. Using discontinuity functions, determine the equation of the elastic curve. The bearings at A and B exert only vertical reactions on the shaft. EI is constant.

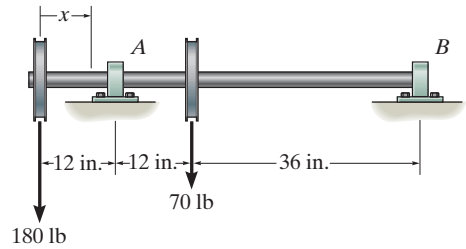

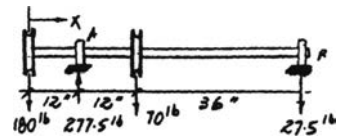

$$M = -180\langle x - 0\rangle - (-277.5)\langle x - 12\rangle - 70\langle x - 24\rangle$$

$$M = -180x + 277.5\langle x - 12\rangle - 70\langle x - 24\rangle$$

Elastic Curve and Slope:

$$EI\frac{d^2v}{dx^2} = M = -180x + 277.5\langle x - 12\rangle - 70\langle x - 24\rangle$$

$$EI\frac{dv}{dx} = -90x^2 + 138.75\langle x - 12\rangle^2 - 35\langle x - 24\rangle^2 + C_1$$

$$EIv = -30x^3 + 46.25\langle x - 12\rangle^3 - 11.67\langle x - 24\rangle^3 + C_1x + C_2 \qquad (1)$$

Boundary Conditions:

$v = 0 \quad \text{at} \quad x = 12 \text{ in.}$

From Eq. (1)

$$0 = -51{,}840 + 12C_1 + C_2$$

$$12C_1 + C_2 = 51\,840 \qquad (2)$$

$v = 0 \quad \text{at} \quad x = 60 \text{ in.}$

From Eq.(1)

$$0 = -6\,480\,000 + 5\,114\,880 - 544\,320 + 60C_1 + C_2$$

$$60C_1 + C_2 = 1909440 \qquad (3)$$

Solving Eqs. (2) and (3) yields:

$$C_1 = 38\,700 \qquad C_2 = -412\,560$$

$$v = \frac{1}{EI}[-30x^3 + 46.25\langle x - 12\rangle^3 - 11.7\langle x - 24\rangle^3 + 38\,700x - 412\,560]\ \text{lb}\cdot\text{in}^3 \qquad \textbf{Ans.}$$

Ans:

$$v = \frac{1}{EI}(-30x^3 + 46.25\langle x - 12^3\rangle - 11.7\langle x - 24\rangle^3 + 38{,}700x - 412{,}560)\ \text{lb}\cdot\text{in}^3$$

12–134. The shaft is supported by a journal bearing at A, which exerts only vertical reactions on the shaft, and by a thrust bearing at B, which exerts both horizontal and vertical reactions on the shaft. Draw the bending-moment diagram for the shaft and then, from this diagram, sketch the deflection or elastic curve for the shaft's centerline. Determine the equations of the elastic curve using the coordinates x_1 and x_2. EI is constant. Use the method of integration.

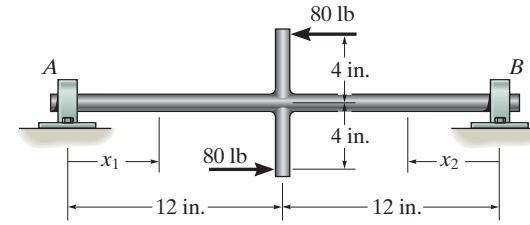

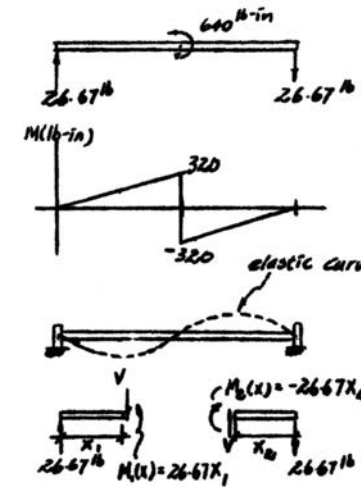

For $M_1(x) = 26.67\,x_1$

$$EI\frac{d^2v_1}{dx_1^2} = 26.67x_1$$

$$EI\frac{dv_1}{dx_1} = 13.33x_1^2 + C_1 \qquad (1)$$

$$EIv_1 = 4.44x_1^3 + C_1x_1 + C_2 \qquad (2)$$

For $M_2(x) = -26.67x_2$

$$EI\frac{d^2v_2}{dx_2^2} = -26.67x_2$$

$$EI\frac{dv_2}{dx_2} = -13.33x_2^2 + C_3 \qquad (3)$$

$$EIv_2 = -4.44x_2^3 + C_3x_2 + C_4 \qquad (4)$$

Boundary Conditions:

$$v_1 = 0 \quad \text{at} \quad x_1 = 0$$

From Eq. (2)

$$C_2 = 0$$

$$v_2 = 0 \quad \text{at} \quad x_2 = 0$$

$$C_4 = 0$$

Continuity Conditions:

$$\frac{dv_1}{dx_1} = -\frac{dv_2}{dx_2} \quad \text{at} \quad x_1 = x_2 = 12$$

From Eqs. (1) and (3)

$$1920 + C_1 = -(-1920 + C_3)$$

$$C_1 = -C_3 \qquad (5)$$

$$v_1 = v_2 \quad \text{at} \quad x_1 = x_2 = 12$$

$$7680 + 12C_1 = -7680 + 12C_3$$

$$C_3 - C_1 = 1280 \qquad (6)$$

Solving Eqs. (5) and (6) yields:

$$C_3 = 640 \qquad C_1 = -640$$

$$v_1 = \frac{1}{EI}\left(4.44x_1^3 - 640x_1\right)\ \text{lb}\cdot\text{in}^3 \qquad \textbf{Ans}$$

$$v_2 = \frac{1}{EI}\left(-4.44x_2^3 + 640x_2\right)\ \text{lb}\cdot\text{in}^3 \qquad \textbf{Ans.}$$

Ans:

$$v_1 = \frac{1}{EI}(4.44x_1^3 - 640x_1)\ \text{lb}\cdot\text{in}^3,$$

$$v_2 = \frac{1}{EI}(-4.44x_2^3 + 640x_2)\ \text{lb}\cdot\text{in}^3$$

12–135. Determine the moment reactions at the supports A and B. Use the method of integration. EI is constant.

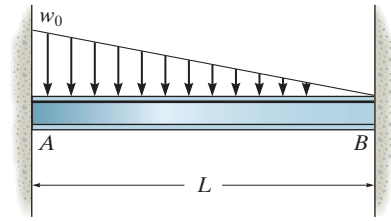

Support Reactions: FBD(a).

$$+\uparrow \Sigma F_y = 0; \qquad A_y + B_y - \frac{w_0 L}{2} = 0 \qquad [1]$$

$$\circlearrowleft + \Sigma M_A = 0; \qquad B_y L + M_A - M_B - \frac{w_0 L}{2}\left(\frac{L}{3}\right) = 0 \qquad [2]$$

Moment Function: FBD(b).

$$\circlearrowleft + \Sigma M_{\text{NA}} = 0; \qquad -M(x) - \frac{1}{2}\left(\frac{w_0}{L}x\right)x\left(\frac{x}{3}\right) - M_B + B_y x = 0$$

$$M(x) = B_y x - \frac{w_0}{6L}x^3 - M_B$$

Slope and Elastic Curve:

$$EI\frac{d^2v}{dx^2} = M(x)$$

$$EI\frac{d^2v}{dx^2} = B_y x - \frac{w_0}{6L}x^3 - M_B$$

$$EI\frac{dv}{dx} = \frac{B_y}{2}x^2 - \frac{w_0}{24L}x^4 - M_B x + C_1 \qquad [3]$$

$$EI\,v = \frac{B_y}{6}x^3 - \frac{w_0}{120L}x^5 - \frac{M_B}{2}x^2 + C_1 x + C_2 \qquad [4]$$

Boundary Conditions:

At $x = 0, \dfrac{dv}{dx} = 0$ From Eq. [3], $C_1 = 0$

At $x = 0, v = 0.$ From Eq. [4], $C_2 = 0$

At $x = L, \dfrac{dv}{dx} = 0.$ From Eq. [3].

$$0 = \frac{B_y L^2}{2} - \frac{w_0 L^3}{24} - M_B L$$

$$0 = 12B_y L - w_0 L^2 - 24M_B \qquad [5]$$

At $x = L, v = 0.$ From Eq. [4],

$$0 = \frac{B_y L^3}{6} - \frac{w_0 L^4}{120} - \frac{M_B L^2}{2}$$

$$0 = 20B_y L - w_0 L^2 - 60M_B \qquad [6]$$

12–135. Continued

Solving Eqs. [5] and [6] yields,

$$M_B = \frac{w_0 L^2}{30}$$ **Ans.**

$$B_y = \frac{3w_0 L}{20}$$

Substituting B_y and M_B into Eqs. [1] and [2] yields,

$$M_A = \frac{w_0 L^2}{20}$$ **Ans.**

$$A_y = \frac{7w_0 L}{20}$$

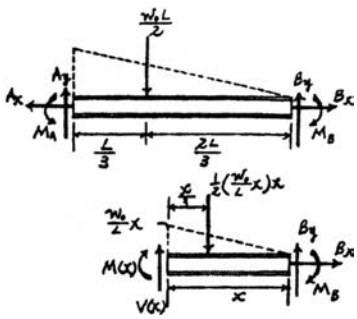

Ans:
$M_B = \frac{w_0 L^2}{30}, M_A = \frac{w_0 L^2}{20}$

***12–136.** Determine the equations of the elastic curve for the beam using the x_1 and x_2 coordinates. Specify the slope at A and the maximum deflection. EI is constant. Use the method of integration.

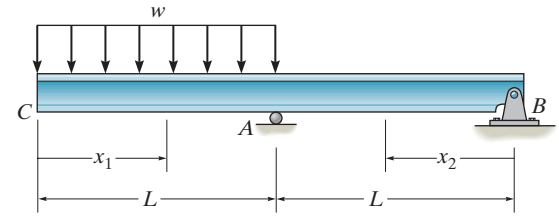

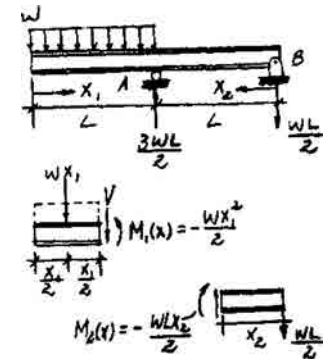

Elastic Curve and Slope:

$$EI\frac{d^2v}{dx^2} = M(x)$$

For $M_1(x) = \dfrac{-wx_1^1}{2}$

$$EI\frac{d^2v_1}{dx_1^2} = \frac{-wx_1^2}{2}$$

$$EI\frac{dv_1}{dx_1} = \frac{-wx_1^3}{6} + C_1 \qquad (1)$$

$$EIv_1 = \frac{-wx_1^4}{24} + C_1x_1 + C_2 \qquad (2)$$

For $M_2(x) = \dfrac{-wLx_2}{2}$

$$EI\frac{d^2v_2}{dx_2^2} = \frac{-wLx_2}{2}$$

$$EI\frac{dv_2}{dx_2} = \frac{-wLx_3^2}{4} + C_3 \qquad (3)$$

$$EIv_2 = \frac{-wLx_2^3}{12} + C_3x_2 + C_4 \qquad (4)$$

Boundary Conditions:

$v_2 = 0$ at $x_2 = 0$

From Eq. (4):

$C_4 = 0$

$v_2 = 0$ at $x_2 = L$

From Eq. (4):

$$0 = \frac{-wL^4}{12} + C_3L$$

$$C_3 = \frac{wL^3}{12}$$

$v_1 = 0$ at $x_1 = L$

From Eq. (2):

$$0 = -\frac{wL^4}{24} + C_1L + C_2 \qquad (5)$$

12–136. Continued

Continuity Conditions:

$$\frac{dv_1}{dx_1} = \frac{dv_2}{-dx_2} \qquad \text{at} \qquad x_1 = x_2 = L$$

From Eqs. (1) and (3)

$$-\frac{wL^3}{6} + C_1 = -\left(-\frac{wL^3}{4} + \frac{wL^3}{12}\right)$$

$$C_1 = \frac{wL^3}{3}$$

Substitute C_1 into Eq. (5)

$$C_2 = -\frac{7wL^4}{24}$$

$$\frac{dv_1}{dx_1} = \frac{w}{6EI}(2L^3 - x_1^3)$$

$$\frac{dv_2}{dx_2} = \frac{w}{12EI}(L^3 - 3Lx_2^2) \qquad (6)$$

$$\theta_A = \left.\frac{dv_1}{dx_1}\right|_{x_1 = L} = -\left.\frac{dv_2}{dx_2}\right|_{x_2 = L} = \frac{wL^3}{6EI} \qquad \textbf{Ans.}$$

$$v_1 = \frac{w}{24EI}(-x_1^4 + BL^3x_1 - 7L^4) \qquad \textbf{Ans.}$$

$$(v_1)_{\max} = \frac{-7wL^4}{24EI} \qquad (x_1 = 0)$$

The negative sign indicates downward displacement.

$$v_2 = \frac{wL}{12EI}(L^2x_2 - x_2^3) \qquad (7) \qquad \textbf{Ans.}$$

$(v_2)_{\max}$ occurs when $\dfrac{dv_2}{dx_2} = 0$

From Eq. (6)

$$L^3 - 3Lx_2^2 = 0$$

$$x_2 = \frac{L}{\sqrt{3}}$$

Substitute x_2 into Eq. (7),

$$(v_2)_{\max} = \frac{wL^4}{18\sqrt{3}EI} \qquad (8)$$

$$v_{\max} = (v_1)_{\max} = \frac{7wL^4}{24EI} \qquad (9) \qquad \textbf{Ans.}$$

12–137. Determine the maximum deflection between the supports A and B. EI is constant. Use the method of integration.

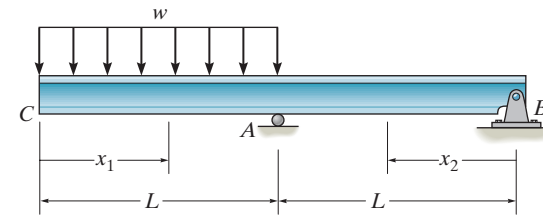

Elastic Curve and Slope:

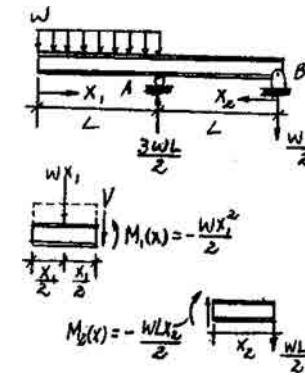

$$EI\frac{d^2v}{dx^2} = M(x)$$

For $M_1(x) = \dfrac{-wx_1^2}{2}$

$$EI\frac{d^2v_1}{dx_1^2} = \frac{-wx_1^2}{2}$$

$$EI\frac{dv_1}{dx_1} = \frac{-wx_1^3}{6} + C_1 \qquad (1)$$

$$EIv_1 = \frac{-wx_1^4}{24} + C_1x_1 + C_2 \qquad (2)$$

For $M_2(x) = \dfrac{-wLx_2}{2}$

$$EI\frac{d^2v_2}{dx_2^2} = \frac{-wLx_2}{2}$$

$$EI\frac{dv_2}{dx_2} = \frac{-wLx_2^2}{4} + C_3 \qquad (3)$$

$$EIv_2 = \frac{-wLx_2^3}{12} + C_3x_2 + C_4 \qquad (4)$$

Boundary Conditions:

$$v_2 = 0 \quad \text{at} \quad x_2 = 0$$

From Eq. (4):

$$C_4 = 0$$

$$v_2 = 0 \quad \text{at} \quad x_2 = L$$

From Eq. (4):

$$0 = \frac{-wL^4}{12} + C_3L$$

$$C_3 = \frac{wL^3}{12}$$

$$v_1 = 0 \quad \text{at} \quad x_1 = L$$

From Eq. (2):

$$0 = -\frac{wL^4}{24} + C_1L + C_2 \qquad (5)$$

12–137. Continued

Continuity Conditions:

$$\frac{dv_1}{dx_1} = \frac{dv_2}{-dx_2} \qquad \text{at} \qquad x_1 = x_2 = L$$

From Eqs. (1) and (3)

$$-\frac{wL^3}{6} + C_1 = -\left(-\frac{wL^3}{4} + \frac{wL^3}{12}\right)$$

$$C_1 = \frac{wL^3}{3}$$

Substitute C_1 into Eq. (5)

$$C_2 = -\frac{7wL^4}{24}$$

$$\frac{dv_1}{dx_1} = \frac{w}{6EI}(2L^3 - x_1^3)$$

$$\frac{dv_2}{dx_2} = \frac{w}{12EI}(L^3 - 3Lx_2^2) \qquad (6)$$

$$\theta_A = \left.\frac{dv_1}{dx_1}\right|_{x_1 = L} = -\left.\frac{dv_2}{dx_2}\right|_{x_2 = L} = \frac{wL^3}{6EI}$$

$$v_1 = \frac{w}{24EI}(-x_1^4 + 8L^3x_1 - 7L^4)$$

$$(v_1)_{\max} = \frac{-7wL^4}{24EI} \qquad (x_1 = 0)$$

The negative sign indicates downward displacement.

$$v_2 = \frac{wL}{12EI}(L^2x_2 - x_2^3) \qquad (7)$$

$(v_2)_{\max}$ occurs when $\dfrac{dv_2}{dx_2} = 0$

From Eq. (6)

$$L^3 - 3Lx_2^2 = 0$$

$$x_2 = \frac{L}{\sqrt{3}}$$

Substitute x_2 into Eq. (7),

$$(v_2)_{\max} = \frac{wL^4}{18\sqrt{3}EI} \qquad \textbf{Ans.}$$

Ans:

$$(v_2)_{\max} = \frac{wL^4}{18\sqrt{3}EI}$$

12–138. If the bearings at A and B exert only vertical reactions on the shaft, determine the slope at B and the deflection at C. Use the moment-area theorems.

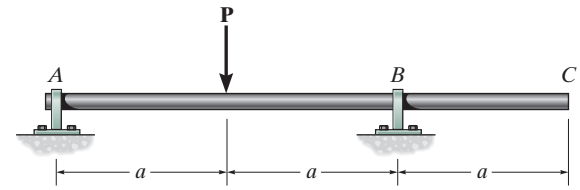

Support Reaction and Elastic Curve: As shown.

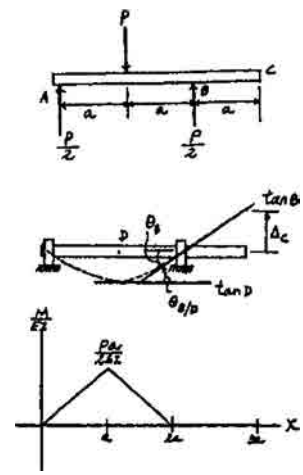

***M/EI* Diagram:** As shown.

Moment-Area Theorems:

$$\theta_{B/D} = \frac{1}{2}\left(\frac{Pa}{2EI}\right)(a) = \frac{Pa^2}{4EI}$$

Due to symmetry, the slope at point D is zero. Hence, the slope at B is

$$\theta_B = |\theta_{B/D}| = \frac{Pa^2}{4EI} \qquad \textbf{Ans.}$$

The displacement at C is

$$\Delta_C = \theta_B L_{BC} = \frac{Pa^2}{4EI}(a) = \frac{Pa^3}{4EI}\uparrow \qquad \textbf{Ans.}$$

Ans:

$\theta_B = \dfrac{Pa^2}{4EI}$, $\Delta_C = \dfrac{Pa^3}{4EI}\uparrow$

12–139. The bearing supports A, B, and C exert only vertical reactions on the shaft. Determine these reactions, then draw the shear and moment diagrams. EI is constant. Use the moment-area theorems.

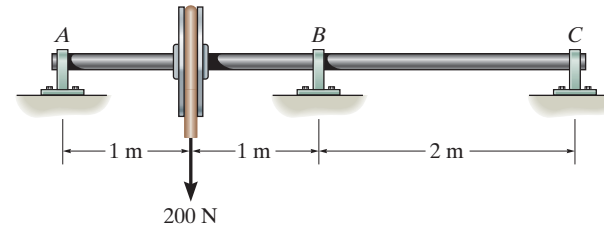

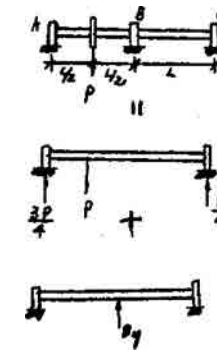

$$(t_{B/A})_1 = \frac{1}{2}\left(\frac{3PL}{8EI}\right)\left(\frac{L}{2}\right)\left(\frac{L}{2}+\frac{L}{6}\right) + \frac{1}{2}\left(\frac{PL}{8EI}\right)\left(\frac{L}{2}\right)\left(\frac{L}{3}\right) + \frac{PL}{4EI}\left(\frac{L}{2}\right)\left(\frac{L}{4}\right) = \frac{5PL^3}{48EI}$$

$$(t_{C/A})_1 = \frac{1}{2}\left(\frac{3PL}{8EI}\right)\left(\frac{L}{2}\right)\left(\frac{3L}{2}+\frac{L}{6}\right) + \frac{1}{2}\left(\frac{3PL}{8EI}\right)\left(\frac{3L}{2}\right)(L) = \frac{7PL^3}{16EI}$$

$$(t_{B/A})_2 = \frac{1}{2}\left(\frac{-B_yL}{2EI}\right)(L)\left(\frac{L}{3}\right) = \frac{-B_yL^3}{12EI}$$

$$(t_{C/A})_2 = \frac{1}{2}\left(\frac{-B_yL}{2EI}\right)(2L)(L) = \frac{-B_yL^3}{2EI}$$

$$2t_{B/A} = t_{C/A}$$

$$2[(t_{B/A})_1 + (t_{B/A})_2] = (t_{C/A})_1 + (t_{C/A})_2$$

$$2\left[\frac{5PL^3}{48EI} + \left(\frac{-B_yL^3}{12EI}\right)\right] = \frac{7PL^3}{16EI} + \left(\frac{-B_yL^3}{2EI}\right)$$

$$B_y = \frac{11}{16}P$$

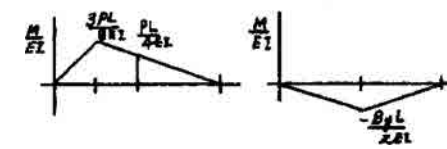

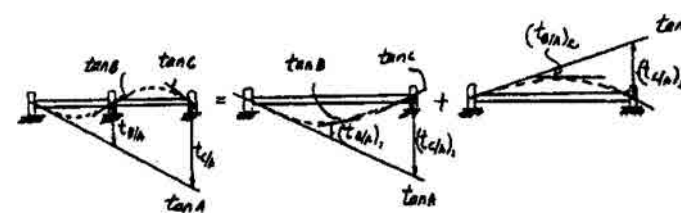

Thus,

$$B_y = \frac{11}{16}(200) = 138\text{ N}\uparrow$$ **Ans.**

As shown on the free-body diagram

$$A_y = 81.3\text{ N}\uparrow$$ **Ans.**

$$C_y = 18.8\text{ N}\downarrow$$ **Ans.**

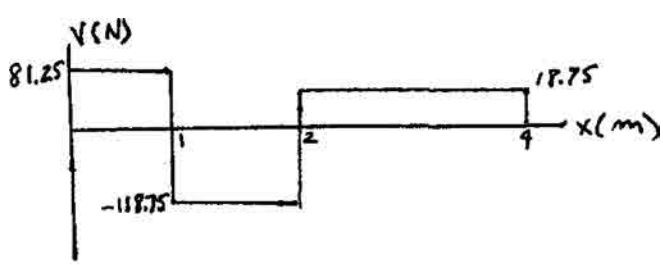

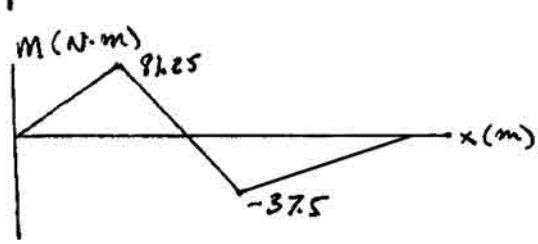

Ans:
$B_y = 138$ N, $A_y = 81.3$ N, $C_y = 18.8$ N

***12–140.** Using the method of superposition, determine the magnitude of $\mathbf{M}_0$ in terms of the distributed load w and dimension a so that the deflection at the center of the beam is zero. EI is constant.

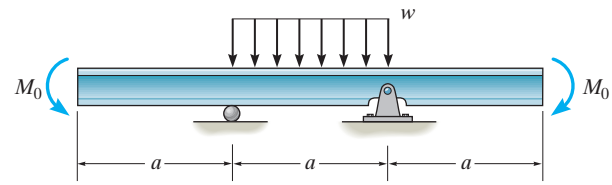

$$(\Delta_C)_1 = \frac{5wa^4}{384EI} \downarrow$$

$$(\Delta_C)_2 = (\Delta_C)_3 = \frac{M_0 a^2}{16EI} \uparrow$$

$$\Delta_C = 0 = (\Delta_C)_1 + (\Delta_C)_2 + (\Delta_C)_3$$

$$+\uparrow \qquad 0 = \frac{-5wa^4}{384EI} + \frac{M_0 a^2}{8EI}$$

$$M_0 = \frac{5wa^2}{48}$$ **Ans.**

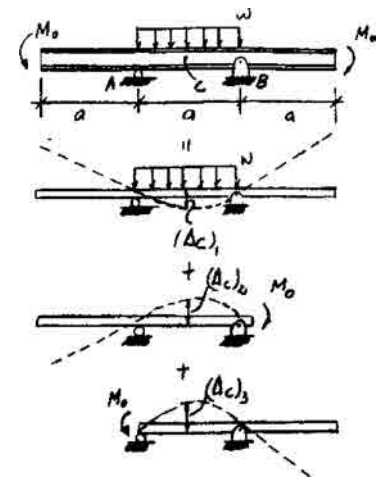

12–141. Using the method of superposition, determine the deflection at C of beam AB. The beams are made of wood having a modulus of elasticity of $E = 1.5(10^3)$ ksi.

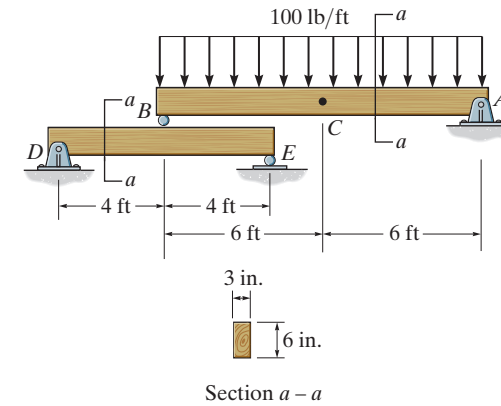

Support Reactions: The reaction at B is shown on the free-body diagram of beam AB, Fig. a.

Method of superposition. Referring to Fig. b and the table in the appendix, the deflection of point B is

$$\Delta_B = \frac{PL_{DE}{}^3}{48EI} = \frac{600(8^3)}{48EI} = \frac{6400 \text{ lb}\cdot\text{ft}^3}{EI} \downarrow$$

Subsequently, referring to Fig. c,

$$(\Delta_C)_1 = \Delta_B\left(\frac{6}{12}\right) = \frac{6400}{EI}\left(\frac{6}{12}\right) = \frac{3200 \text{ lb}\cdot\text{ft}^3}{EI} \downarrow$$

$$(\Delta_C)_2 = \frac{5wL^4}{384EI} = \frac{5(100)(12^4)}{384EI} = \frac{27000 \text{ lb}\cdot\text{ft}^3}{EI} \downarrow$$

Thus, the deflection of point C is

$$(+\downarrow) \qquad \Delta_C = (\Delta_C)_1 + (\Delta_C)_2$$

$$= \frac{3200}{EI} + \frac{27000}{EI}$$

$$= \frac{30200 \text{ lb}\cdot\text{ft}^3}{EI} = \frac{30200(12^3)}{1.5(10^6)\left[\frac{1}{12}(3)(6^3)\right]}$$

$$= 0.644 \text{ in} \downarrow$$ **Ans.**

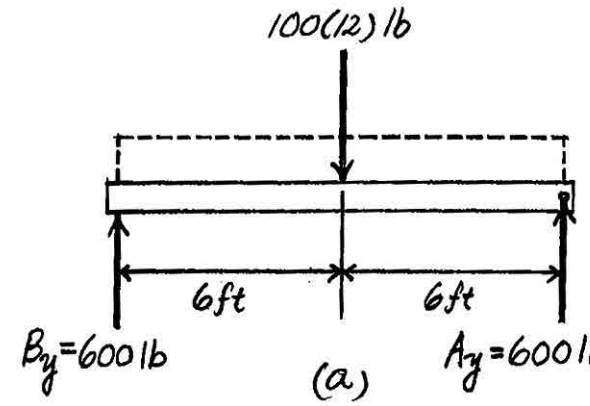

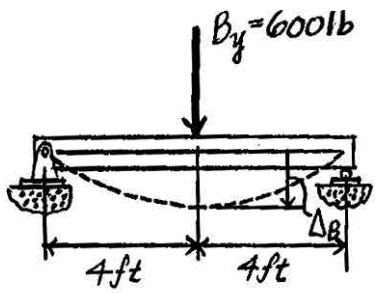

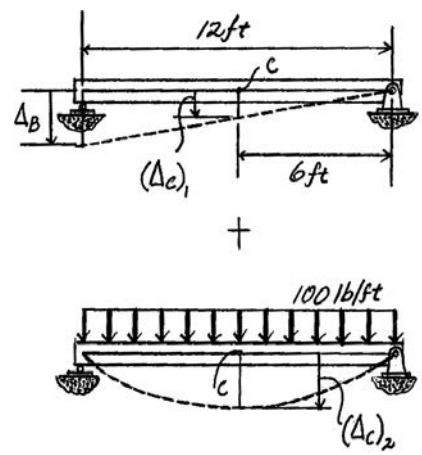

Ans:
$\Delta_C = 0.644 \text{ in}\downarrow$

12–142. The rim on the flywheel has a thickness t, width b, and specific weight γ. If the flywheel is rotating at a constant rate of ω, determine the maximum moment developed in the rim. Assume that the spokes do not deform. *Hint*: Due to symmetry of the loading, the slope of the rim at each spoke is zero. Consider the radius to be sufficiently large so that the segment AB can be considered as a straight beam fixed at both ends and loaded with a uniform centrifugal force per unit length. Show that this force is $w = bt\gamma\omega^2 r/g$.

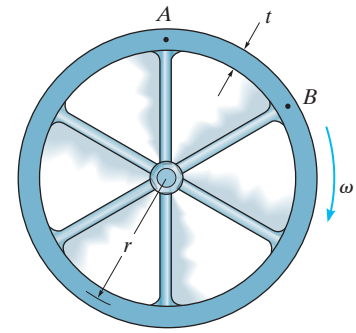

Centrifugal Force: The centrifugal force acting on a unit length of the rim rotating at a constant rate of ω is

$$w = m\omega^2 r = bt\left(\frac{\gamma}{g}\right)\omega^2 r = \frac{bt\gamma\omega^2 r}{g} \qquad (\textbf{Q.E.D.})$$

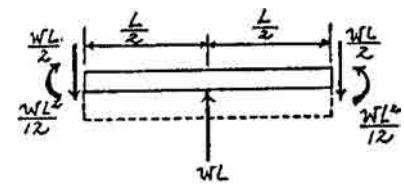

Elastic Curve: Member AB of the rim is modeled as a straight beam with both of its ends fixed and subjected to a uniform centrifugal force w.

Method of Superposition: Using the table in Appendix C, the required displacements are

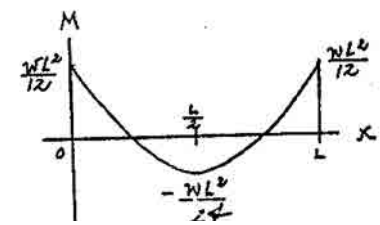

$$\theta_B' = \frac{wL^3}{6EI} \qquad \theta_B'' = \frac{M_B L}{EI} \qquad \theta_B''' = \frac{B_y L^2}{2EI}$$

$$v_B' = \frac{wL^4}{8EI}\uparrow \qquad v_B'' = \frac{M_B L^2}{2EI}\uparrow \qquad v_B''' = \frac{B_y L^3}{3EI}\downarrow$$

Compatibility requires,

$$0 = \theta_B' + \theta_B'' + \theta_B'''$$

$$0 = \frac{wL^3}{6EI} + \frac{M_B L}{EI} + \left(-\frac{B_y L^2}{2EI}\right)$$

$$0 = wL^2 + 6M_B - 3B_y L \qquad (1)$$

$$(+\uparrow) \qquad 0 = v_B' + v_B'' + v_B'''$$

$$0 = \frac{wL^4}{8EI} + \frac{M_B L^2}{2EI} + \left(-\frac{B_y L^3}{3EI}\right)$$

$$0 = 3wL^2 + 12M_B - 8B_y L \qquad (2)$$

Solving Eqs. (1) and (2) yields,

$$B_y = \frac{wL}{2} \qquad M_B = \frac{wL^2}{12}$$

Due to symmetry, $A_y = \dfrac{wL}{2}$ $\qquad M_A = \dfrac{wL^2}{12}$

Maximum Moment: From the moment diagram, the maximum moment occurs at the two fixed end supports. With $w = \dfrac{bt\gamma\omega^2 r}{g}$ and $L = r\theta = \dfrac{\pi r}{3}$.

$$M_{\max} = \frac{wL^2}{12} = \frac{\frac{bt\gamma\omega^2 r}{g}\left(\frac{gr}{3}\right)^2}{12} = \frac{\pi^2 bt\gamma\omega^2 r^3}{108g} \qquad \textbf{Ans.}$$

Ans:

$$M_{\max} = \frac{\pi^2 br\gamma\omega^2 r^3}{108g}$$

13–1. Determine the critical buckling load for the column. The material can be assumed rigid.

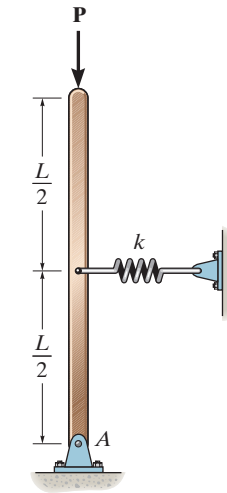

Equilibrium: The disturbing force F can be determined by summing moments about point A.

$$\circlearrowleft + \Sigma M_A = 0; \qquad P(L\theta) - F\left(\frac{L}{2}\right) = 0$$

$$F = 2P\theta$$

Spring Formula: The restoring spring force F_1 can be determine using spring formula $F_s = kx$.

$$F_s = k\left(\frac{L}{2}\theta\right) = \frac{kL\theta}{2}$$

Critical Buckling Load: For the mechanism to be on the verge of buckling, the disturbing force F must be equal to the restoring spring force F_s.

$$2P_{\text{cr}}\,\theta = \frac{kL\theta}{2}$$

$$P_{\text{cr}} = \frac{kL}{4} \qquad \textbf{Ans.}$$

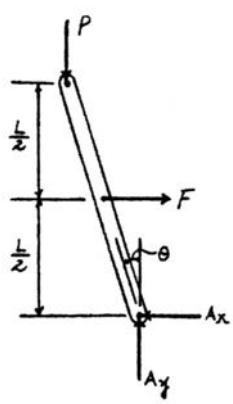

Ans:

$$P_{\text{cr}} = \frac{kL}{4}$$

13–2. The column consists of a rigid membr that is pinned at its bottom and attached to a spring at its top. If the spring is unstretched when the column is in the vertical position, determine the critical load that can be placed on the column.

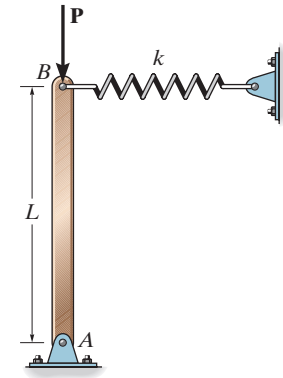

$\circlearrowleft + \Sigma M_A = 0; \qquad PL \sin\theta - (kL \sin\theta)(L \cos\theta) = 0$

$$P = kL \cos\theta$$

Since θ is small $\qquad \cos\theta = 1$

$$P_{cr} = kL \qquad \textbf{Ans.}$$

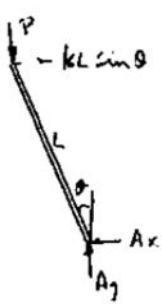

Ans:
$P_{cr} = kL$

13–3. The aircraft link is made from an A992 steel rod. Determine the smallest diameter of the rod, to the nearest $\frac{1}{16}$ in., that will support the load of 4 kip without buckling. The ends are pin connected.

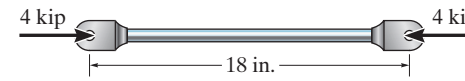

$$I = \frac{\pi}{4}\left(\frac{d}{2}\right)^4 = \frac{\pi d^4}{64}$$

$$K = 1.0$$

$$P_{cr} = \frac{\pi^2 E I}{(KL)^2}$$

$$4 = \frac{\pi^2(29)(10^3)\left(\frac{\pi d^4}{64}\right)}{((1.0)(18))^2}$$

$$d = 0.551 \text{ in.}$$

Use $d = \frac{9}{16}$ in. **Ans.**

Check:

$$\sigma_{cr} = \frac{P_{cr}}{A} = \frac{4}{\frac{\pi}{4}(0.562^2)} = 16.2 \text{ ksi} < \sigma_Y$$

Therefore, Euler's formula is valid.

Ans:

Use $d = \frac{9}{16}$ in.

***13–4.** Rigid bars AB and BC are pin connected at B. If the spring at D has a stiffness k, determine the critical load P_{cr} for the system.

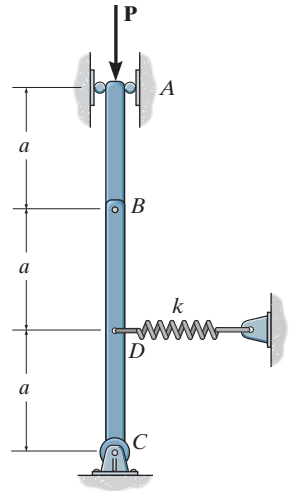

Equilibrium. The disturbing force F can be related P by considering the equilibrium of joint A and then the equilibrium of member BC,

Joint A (Fig. b)

$$+\uparrow \Sigma F_y = 0; \qquad F_{AB}\cos\phi - P = 0 \qquad\qquad F_{AB} = \frac{P}{\cos\phi}$$

Member BC (Fig. c)

$$\Sigma M_C = 0;\ F(a\cos\theta) - \frac{P}{\cos\phi}\cos\phi\,(2a\sin\theta) - \frac{P}{\cos\phi}\sin\phi(2a\cos\theta) = 0$$

$$F = 2P(\tan\theta + \tan\phi)$$

Since θ and ϕ are small, $\tan\theta \cong \theta$ and $\tan\phi \cong \phi$. Thus,

$$F = 2P(\theta + \phi) \tag{1}$$

Also, from the geometry shown in Fig. a,

$$2a\theta = a\phi \qquad\qquad \phi = 2\theta$$

Thus Eq. (1) becomes

$$F = 2P(\theta + 2\theta) = 6P\theta$$

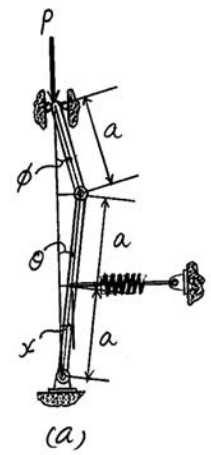

Spring Force. The restoring spring force F_{sp} can be determined using the spring formula, $F_{sp} = kx$, where $x = a\theta$, Fig. a. Thus,

$$F_{sp} = kx = ka\theta$$

Critical Buckling Load. When the mechanism is on the verge of buckling the disturbing force F must be equal to the restoring spring force F_{sp}.

$$F = F_{sp}$$

$$6P_{cr}\theta = ka\theta$$

$$P_{cr} = \frac{ka}{6} \qquad \textbf{Ans.}$$

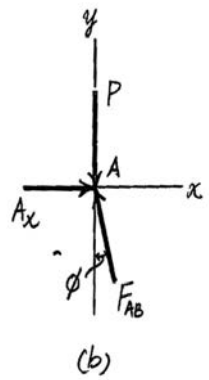

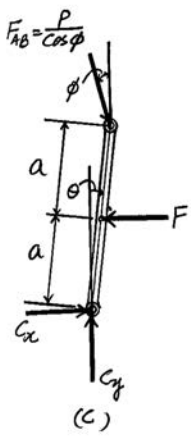

13–5. A rod made from polyurethane has a stress-strain diagram in compression as shown. If the rod is pinned at its ends and is 37 in. long, determine its smallest diameter so it does not fail from elastic buckling.

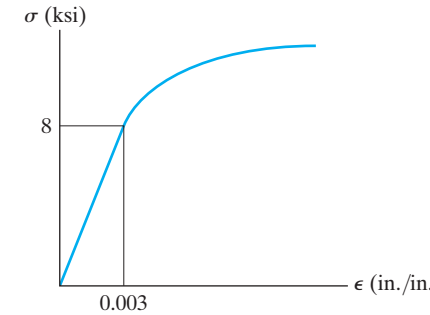

$$E = \frac{\sigma}{\epsilon} = \frac{8(10^3)}{0.003} = 2.667(10^6) \text{ psi}$$

$$P_{cr} = \frac{\pi^2 EI}{(KL)^2}$$

$$8(10^3)\pi(d/2)^2 = \frac{\pi^2(2.667)(10^6)\left(\frac{\pi}{4}\right)\left(\frac{d}{2}\right)^4}{(1.0(37))^2}$$

$$d = 2.58 \text{ in.}$$ **Ans.**

Ans:
$d = 2.58$ in.

13–6. A rod made from polyurethane has a stress-strain diagram in compression as shown. If the rod is pinned at its top and fixed at its base, and is 37 in. long, determine its smallest diameter so it does not fail from elastic buckling.

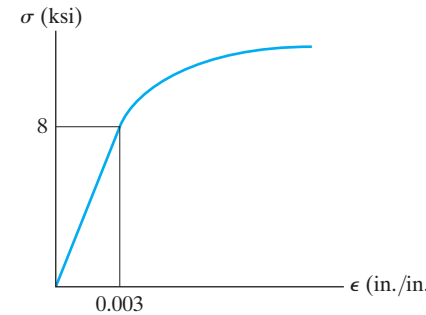

$$E = \frac{8(10^3)}{0.003} = 2.667(10^6) \text{ psi}$$

$$P_{cr} = \frac{\pi^2 EI}{(KL)^2}$$

$$8(10^3)\pi(d/2)^2 = \frac{\pi^2(2.667)(10^6)\left(\frac{\pi}{4}\right)\left(\frac{d}{2}\right)^4}{[(0.7)(37)]^2}$$

$d = 1.81$ in. **Ans.**

Ans:
$d = 1.81$ in.

13–7. A 2014-T6 aluminum alloy hollow circular tube has an outer diameter of 150 mm and inner diameter of 100 mm. If it is pinned at both ends, determine the largest axial load that can be applied to the tube without causing it to buckle. The tube is 6 m long.

Section Properties. The cross-sectional area and moment of inertia of the tube are

$$A = \pi(0.075^2 - 0.05^2) = 3.125(10^{-3})\pi \text{ m}^2$$

$$I = \frac{\pi}{4}(0.075^4 - 0.05^4) = 19.9418(10^{-6}) \text{ m}^4$$

Critical Buckling Load. Applying Euler's formula,

$$P_{cr} = \frac{\pi^2 EI}{(KL)^2} = \frac{\pi^2[73.1(10^9)][19.9418(10^{-6})]}{[1(6)]^2}$$

$$= 399.65 \text{ kN} = 400 \text{ kN} \qquad \textbf{Ans.}$$

Critical Stress. Euler's formula is valid only if $\sigma_{cr} < \sigma_Y$.

$$\sigma_{cr} = \frac{P_{cr}}{A} = \frac{399.65}{3.125(10^{-3})\pi} = 40.71 \text{ MPa} < \sigma_Y = 414 \text{ MPa} \qquad \text{(O.K.)}$$

Ans:
$P_{cr} = 400$ kN

***13–8.** A 2014-T6 aluminum alloy hollow circular tube has an outer diameter of 150 mm and inner diameter of 100 mm. If it is pinned at one end and fixed at the other end, determine the largest axial load that can be applied to the tube without causing it to buckle. The tube is 6 m long.

Section Properties. The cross-sectional area and moment of inertia of the tube are

$$A = \pi(0.075^2 - 0.05^2) = 3.125(10^{-3})\pi \text{ m}^2$$

$$I = \frac{\pi}{4}(0.075^4 - 0.05^4) = 19.9418(10^{-6}) \text{ m}^4$$

Critical Buckling Load. Applying Euler's formula,

$$P_{cr} = \frac{\pi^2 EI}{(KL)^2} = \frac{\pi^2[73.1(10^9)][19.9418(10^{-6})]}{[0.7(6)]^2}$$

$$= 815.61 \text{ kN} = 816 \text{ kN} \qquad \textbf{Ans.}$$

Critical Stress. Euler's formula is valid only if $\sigma_{cr} < \sigma_Y$.

$$\sigma_{cr} = \frac{P_{cr}}{A} = \frac{815.61(10^3)}{3.125(10^{-3})\pi} = 83.08 \text{ MPa} < \sigma_Y = 414 \text{ MPa} \qquad \text{(O.K.)}$$

13–9. A column is constructed using four A992 steel angles that are laced together as shown. The length of the column is to be 25 ft and the ends are assumed to be pin connected. Each angle shown below has an area of $A = 2.75\ \text{in}^2$ and moments of inertia of $I_x = I_y = 2.22\ \text{in}^4$. Determine the distance d between the centroids C of the angles so that the column can support an axial load of $P = 350$ kip without buckling. Neglect the effect of the lacing.

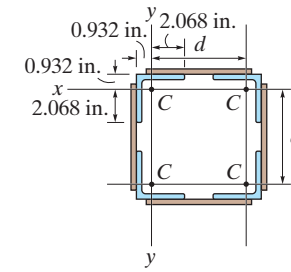

$$I_x = I_y = 4\left[2.22 + 2.75\left(\frac{d}{2}\right)^2\right] = 8.88 + 2.75\,d^2$$

$$\sigma_{cr} = \frac{P_{cr}}{A} = \frac{350}{4(2.75)} = 31.8\ \text{ksi} < \sigma_Y \qquad \text{OK}$$

Therefore, Euler's formula is valid.

$$P_{cr} = \frac{\pi^2 EI}{(KL)^2}$$

$$350 = \frac{\pi^2\,(29)(10^3)(8.88 + 2.75\,d^2)}{[1.0\,(300)]^2}$$

$d = 6.07$ in. **Ans.**

Check dimension:

$d > 2(2.068) = 4.136$ in. OK

Ans:
$d = 6.07$ in.

13–10. A column is constructed using four A992 steel angles that are laced together as shown. The length of the column is to be 40 ft and the ends are assumed to be fixed connected. Each angle shown below has an area of $A = 2.75\ \text{in}^2$ and moments of inertia of $I_x = I_y = 2.22\ \text{in}^4$. Determine the distance d between the centroids C of the angles so that the column can support an axial load of $P = 350$ kip without buckling. Neglect the effect of the lacing.

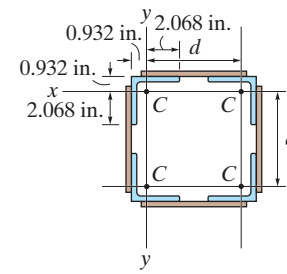

$$I_x = I_y = 4\left[2.22 + 2.75\left(\frac{d}{2}\right)^2\right] = 8.88 + 2.75\,d^2$$

$$\sigma_{cr} = \frac{P_{cr}}{A} = \frac{350}{4(2.75)} = 31.8\ \text{ksi} < \sigma_Y \qquad \text{OK}$$

Therefore, Euler's formula is valid.

$$P_{cr} = \frac{\pi^2 EI}{(KL)^2}; \qquad 350 = \frac{\pi^2\,(29)(10^3)(8.88 + 2.75\,d^2)}{[0.5\,(12)(40)]^2}$$

$d = 4.73$ in. **Ans.**

Check dimension:

$d > 2\ (2.068) = 4.136$ in. OK

Ans:
$d = 4.73$ in.

13–11. The A992 steel angle has a cross-sectional area of $A = 2.48\ \text{in}^2$ and a radius of gyration about the x axis of $r_x = 1.26$ in. and about the y axis of $r_y = 0.879$ in. The smallest radius of gyration occurs about the a–a axis and is $r_a = 0.644$ in. If the angle is to be used as a pin-connected 10-ft-long column, determine the largest axial load that can be applied through its centroid C without causing it to buckle.

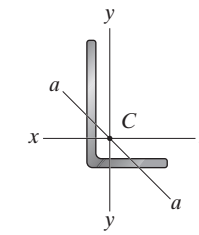

The Least Radius of Gyration:

$r_2 = 0.644$ in. controls.

$$\sigma_{cr} = \frac{\pi^2 E}{\left(\frac{KL}{r}\right)^2}; \qquad K = 1.0$$

$$= \frac{\pi^2 (29)(10^3)}{\left[\frac{1.0\,(120)}{0.644}\right]^2} = 8.243\ \text{ksi} < \sigma_\gamma \qquad \text{O.K.}$$

$$P_{cr} = \sigma_{cr} A = 8.243\,(2.48) = 20.4\ \text{kip} \qquad \textbf{Ans.}$$

Ans:
$P_{cr} = 20.4\,\text{kip}$

***13–12.** The control linkage for a machine consists of two L2 steel rods BE and FG, each with a diameter of 1 in. If a device at G causes the end G to freeze up and become pin connected, determine the maximum horizontal force P that could be applied to the handle without causing either of the two rods to buckle. The members are pin connected at A, B, D, E, and F.

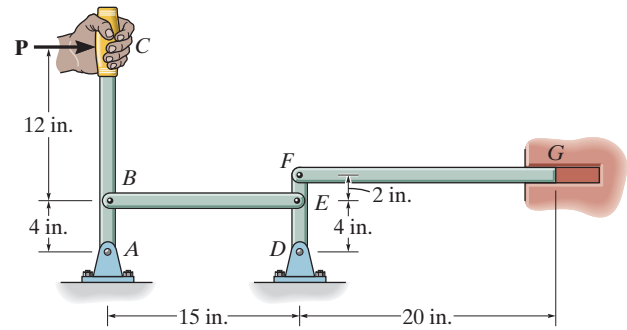

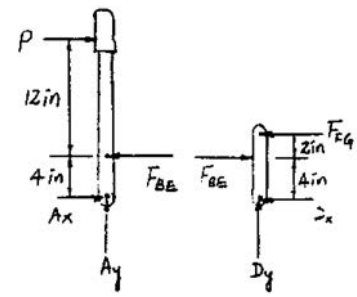

$$\circlearrowleft + \Sigma M_A = 0; \quad F_{BE}(4) - P(16) = 0$$

$$F_{BE} = 4P$$

$$\circlearrowleft + \Sigma M_D = 0; \quad F_{FG}(6) - 4P(4) = 0$$

$$F_{FG} = 2.6667\,P$$

For rod BE,

$$P_{cr} = \frac{\pi^2 E I}{(K L)^2}; \qquad K = 1.0$$

$$4P = \frac{\pi^2 (29)(10^3)\left(\frac{\pi}{4}\right)(0.5^4)}{[1.0\,(15)]^2}$$

$$P = 15.6 \text{ kip}$$

Check Stress:

$$\sigma_{cr} = \frac{P_{cr}}{A} = \frac{4(15.6)}{\frac{\pi}{4}(1^2)} = 79.5 \text{ ksi} < \sigma_Y = 102 \text{ ksi} \qquad \text{OK}$$

For rod *FG*:

$$P_{cr} = \frac{\pi^2 E I}{(K L)^2}; \qquad K = 1.0$$

$$2.6667\,P = \frac{\pi^2 [(29)(10^3)]\frac{\pi}{4}(0.5^4)}{[1.0\,(20)]^2}$$

$$P = 13.2 \text{ kip} \qquad \text{(controls)}$$ **Ans.**

Check Stress:

$$\sigma_{cr} = \frac{P_{cr}}{A} = \frac{2.6667\,(13.2)}{\frac{\pi}{4}(1^2)} = 44.7 \text{ ksi} < \sigma_Y = 102 \text{ ksi} \qquad \text{OK}$$

Hence, Euler's equation is still valid.

13–13. An A992 steel column has a length of 5 m and is fixed at both ends. If the cross-sectional area has the dimensions shown, determine the critical load.

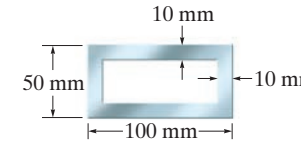

$$I = \frac{1}{12}(0.1)(0.05^3) - \frac{1}{12}(0.08)(0.03^3) = 0.86167\,(10^{-6})\ \text{m}^4$$

$$P_{cr} = \frac{\pi^2 EI}{(KL)^2} = \frac{\pi^2(200)(10^9)(0.86167)(10^{-6})}{[(0.5)(5)]^2}$$

$$= 272\,138\ \text{N}$$

$$= 272\ \text{kN}$$ **Ans.**

$$\sigma_{cr} = \frac{P_{cr}}{A}; \qquad A = (0.1)(0.05) - (0.08)(0.03) = 2.6(10^{-3})\ \text{m}^2$$

$$= \frac{272\,138}{2.6\,(10^{-3})} = 105\ \text{MPa} < \sigma_\gamma$$

Therefore, Euler's formula is valid.

Ans:
$P_{cr} = 272$ kN

13–14. The two steel channels are to be laced together to form a 30-ft-long bridge column assumed to be pin connected at its ends. Each channel has a cross-sectional area of $A = 3.10\ \text{in}^2$ and moments of inertia $I_x = 55.4\ \text{in}^4$, $I_y = 0.382\ \text{in}^4$. The centroid C of its area is located in the figure. Determine the proper distance d between the centroids of the channels so that buckling occurs about the x–x and y'–y' axes due to the same load. What is the value of this critical load? Neglect the effect of the lacing. $E_{st} = 29(10^3)$ ksi, $\sigma_y = 50$ ksi.

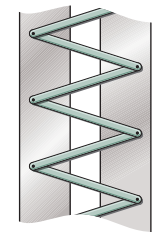

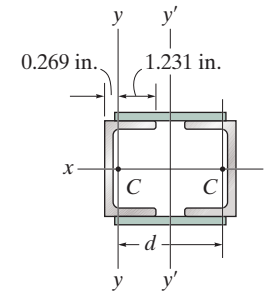

$$I_x = 2(55.4) = 110.8\ \text{in.}^4$$

$$I_y = 2(0.382) + 2\,(3.10)\left(\frac{d}{2}\right)^2 = 0.764 + 1.55\,d^2$$

In order for the column to buckle about $x - x$ and $y - y$ at the same time, I_y must be equal to I_x.

$$I_y = I_x$$

$$0.764 + 1.55\,d^2 = 110.8$$

$$d = 8.43\ \text{in.}$$ **Ans.**

Check:

$$d > 2(1.231) = 2.462\ \text{in.}$$ O.K.

$$P_{cr} = \frac{\pi^2 EI}{(KL)^2} = \frac{\pi^2\,(29)(10^3)(110.8)}{[1.0(360)]^2}$$

$$= 245\ \text{kip}$$ **Ans.**

Check Stress:

$$\sigma_{cr} = \frac{P_{cr}}{A} = \frac{245}{2(3.10)} = 39.5\ \text{ksi} < \sigma_\gamma$$

Therefore, Euler's formula is valid.

Ans:
$d = 8.43$ in., $P_{cr} = 245$ kip

13–15. An A992 steel W200 × 46 column of length 9 m is pinned at both of its ends. Determine the allowable axial load the column can support if F.S. = 2 is to be used against buckling.

Section Properties. From the table listed in the appendix, the cross-sectional area and moment of inertia about the y axis for a W200 × 46 are

$$A = 5890 \text{ mm}^2 = 5.89(10^{-3}) \text{ m}^2$$

$$I_y = 15.3(10^6) \text{ mm}^4 = 15.3(10^{-6}) \text{ m}^4$$

Critical Buckling Load. The column will buckle about the weak (y axis). Applying Euler's formula,

$$P_{cr} = \frac{\pi^2 E I_y}{(KL)^2} = \frac{\pi^2[200(10^9)][15.3(10^{-6})]}{[1(9)]^2}$$

$$= 372.85 \text{ kN}$$

Thus, the allowable centric load is

$$P_{allow} = \frac{P_{cr}}{\text{F.S.}} = \frac{372.85}{2} = 186.43 \text{ kN} = 186 \text{ kN} \qquad \textbf{Ans.}$$

Critical Stress. Euler's formula is valid only if $\sigma_{cr} < \sigma_Y$.

$$\sigma_{cr} = \frac{P_{cr}}{A} = \frac{372.85(10^3)}{5.89(10^{-3})} = 63.30 \text{ MPa} < \sigma_Y = 345 \text{ MPa} \quad \text{(O.K.)}$$

Ans:
$P_{allow} = 186$ kN

***13–16.** An A992 steel W200 × 46 column of length 9 m is fixed at one end and free at its other end. Determine the allowable axial load the column can support if F.S. = 2 is to be used against buckling.

Section Properties. From the table listed in the appendix, the cross-sectional area and moment of inertia about the y axis for a W200 × 46 are

$$A = 5890 \text{ mm}^2 = 5.89(10^{-3}) \text{ m}^2$$

$$I_y = 15.3(10^6) \text{ mm}^4 = 15.3(10^{-6}) \text{ m}^4$$

Critical Buckling Load. The column will buckle about the weak (y axis). Applying Euler's formula,

$$P_{cr} = \frac{\pi^2 E I_y}{(KL)^2} = \frac{\pi^2[200(10^9)][15.3(10^{-6})]}{[2(9)]^2} = 93.21 \text{ kN}$$

Thus, the allowable centric load is

$$P_{allow} = \frac{P_{cr}}{\text{F.S.}} = \frac{93.21}{2} = 46.61 \text{ kN} = 46.6 \text{ kN} \qquad \textbf{Ans.}$$

Critical Stress. Euler's formula is valid only if $\sigma_{cr} < \sigma_Y$.

$$\sigma_{cr} = \frac{P_{cr}}{A} = \frac{93.21(10^3)}{5.89(10^{-3})} = 15.83 \text{ MPa} < \sigma_Y = 345 \text{ MPa} \quad \text{(O.K.)}$$

13–17. The 10-ft wooden rectangular column has the dimensions shown. Determine the critical load if the ends are assumed to be pin connected. $E_w = 1.6(10^3)$ ksi, $\sigma_Y = 5$ ksi.

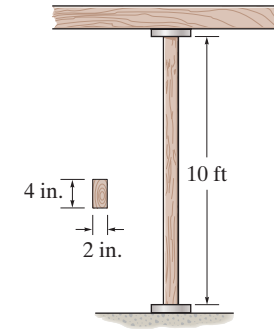

Section Properties:

$$A = 4(2) = 8.00 \text{ in}^2$$

$$I_x = \frac{1}{12}(2)\left(4^3\right) = 10.667 \text{ in}^4$$

$$I_y = \frac{1}{12}(4)\left(2^3\right) = 2.6667 \text{ in}^4 \ (\textit{Controls !})$$

Critical Buckling Load: $K = 1$ for pin supported ends column. Applying *Euler's* formula,.

$$P_{cr} = \frac{\pi^2 EI}{(KL)^2}$$

$$= \frac{\pi^2(1.6)(10^3)(2.6667)}{[1(10)(12)]^2}$$

$$= 2.924 \text{ kip} = 2.92 \text{ kip} \qquad \textbf{Ans.}$$

Critical Stress: *Euler's* formula is only valid if $\sigma_{cr} < \sigma_\gamma$.

$$\sigma_{cr} = \frac{P_{cr}}{A} = \frac{2.924}{8.00} = 0.3655 \text{ ksi} < \sigma_\gamma = 5 \text{ ksi} \qquad \text{O.K.}$$

Ans:
$P_{cr} = 2.92$ kip

13–18. The 10-ft wooden column has the dimensions shown. Determine the critical load if the bottom is fixed and the top is pinned. $E_w = 1.6(10^3)$ ksi, $\sigma_Y = 5$ ksi.

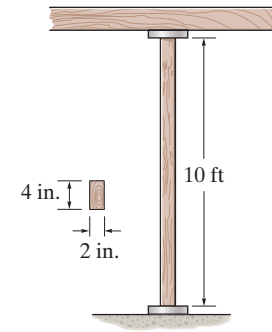

Section Properties:

$A = 4(2) = 8.00 \text{ in}^2$

$I_x = \frac{1}{12}(2)\left(4^3\right) = 10.667 \text{ in}^4$

$I_y = \frac{1}{12}(4)\left(2^3\right) = 2.6667 \text{ in}^4$ (*Controls!*)

Critical Buckling Load: $K = 0.7$ for column with one end fixed and the other end pinned. Applying *Euler's* formula.

$$P_{cr} = \frac{\pi^2 EI}{(KL)^2}$$

$$= \frac{\pi^2 (1.6)(10^3)(2.6667)}{[0.7(10)(12)]^2}$$

$$= 5.968 \text{ kip} = 5.97 \text{ kip} \qquad \textbf{Ans.}$$

Critical Stress: *Euler's* formula is only valid if $\sigma_{cr} < \sigma_\gamma$.

$$\sigma_{cr} = \frac{P_{cr}}{A} = \frac{5.968}{8.00} = 0.7460 \text{ ksi} < \sigma_\gamma = 5 \text{ ksi} \qquad \text{O.K.}$$

Ans:
$P_{cr} = 5.97$ kip

13–19. Determine the maximum force P that can be applied to the handle so that the A992 steel control rod AB does not buckle. The rod has a diameter of 1.25 in. It is pin connected at its ends.

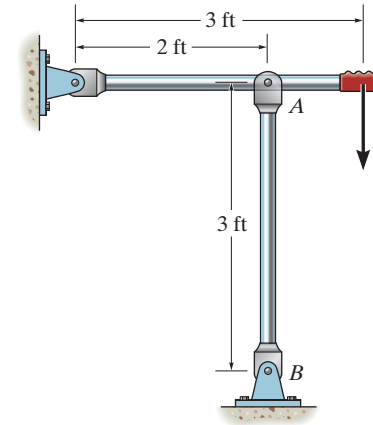

$$\circlearrowleft + \Sigma M_C = 0; \qquad F_{AB}(2) - P(3) = 0$$

$$P = \frac{2}{3} F_{AB} \qquad (1)$$

Bucking Load for Rod *AB*:

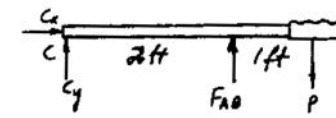

$$I = \frac{\pi}{4}(0.625^4) = 0.1198 \text{ in}^4$$

$$A = \pi(0.625^2) = 1.2272 \text{ in}^2$$

$$P_{cr} = \frac{\pi^2 EI}{(KL)^2}$$

$$F_{AB} = P_{cr} = \frac{\pi^2(29)(10^3)(0.1198)}{[1.0(3)(12)]^2} = 26.47 \text{ kip}$$

From Eq. (1)

$$P = \frac{2}{3}(26.47) = 17.6 \text{ kip} \qquad \textbf{Ans.}$$

Check:

$$\sigma_{cr} = \frac{P_{cr}}{A} = \frac{26.47}{1.2272} = 21.6 \text{ ksi} < \sigma_Y \qquad \text{OK}$$

Therefore, Euler's formula is valid.

Ans:
$P = 17.6$ kip

***13–20.** The A992 steel tube has the cross-sectional area shown. If it has a length of 15 ft and is pinned at both ends, determine the maximum axial load that the tube can support without causing it to buckle.

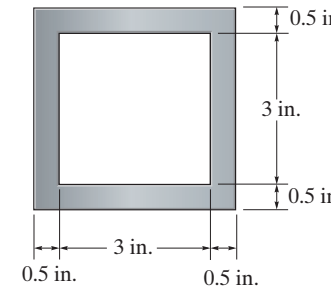

Section Properties. The cross-sectional area and moment of inertia of the tube are

$$A = 4(4) - 3(3) = 7 \text{ in}^2$$

$$I = \frac{1}{12}(4)(4^3) - \frac{1}{12}(3)(3^3) = 14.5833 \text{ in}^4$$

Critical Buckling Load. Applying Euler's formula,

$$P_{cr} = \frac{\pi^2 EI}{(KL)^2} = \frac{\pi^2[29(10^3)](14.5833)}{[1(15)(12)]^2} = 128.83 \text{ kip} = 129 \text{ kip} \qquad \textbf{Ans.}$$

Critical Stress. Euler's formula is valid only if $\sigma_{cr} < \sigma_Y$

$$\sigma_{cr} = \frac{P_{cr}}{A} = \frac{128.83}{7} = 18.40 \text{ MPa} < \sigma_Y = 50 \text{ ksi} \quad \text{(O.K.)}$$

13–21. The A992 steel tube has the cross-sectional area shown. If it has a length of 15 ft and is fixed at one end and free at the other end, determine the maximum axial load that the tube can support without causing it to buckle.

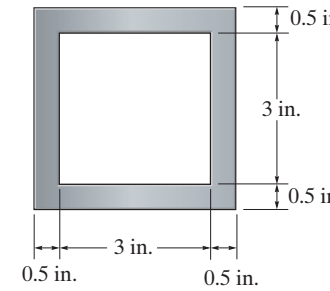

Section Properties. The cross-sectional area and moment of inertia of the tube are

$$A = 4(4) - 3(3) = 7 \text{ in}^2$$

$$I = \frac{1}{12}(4)(4^3) - \frac{1}{12}(3)(3^3) = 14.5833 \text{ in}^4$$

Critical Buckling Load. Applying Euler's formula,

$$P_{cr} = \frac{\pi^2 EI}{(KL)^2} = \frac{\pi^2[29(10^3)](14.5833)}{[2(15)(12)]^2} = 32.21 \text{ kip} = 32.2 \text{ kip} \qquad \textbf{Ans.}$$

Critical Stress. Euler's formula is valid only if $\sigma_{cr} < \sigma_Y$.

$$\sigma_{cr} = \frac{P_{cr}}{A} = \frac{32.21}{7} = 4.60 \text{ MPa} < \sigma_Y = 50 \text{ ksi} \quad \text{(O.K.)}$$

Ans:
$P_{cr} = 32.2$ kip

13–22. The linkage is made using two A992 steel rods, each having a circular cross section. Determine the diameter of each rod to the nearest $\frac{3}{4}$ in. that will support a load of $P = 6$ kip. Assume that the rods are pin connected at their ends. Use a factor of safety with respect to buckling of 1.8.

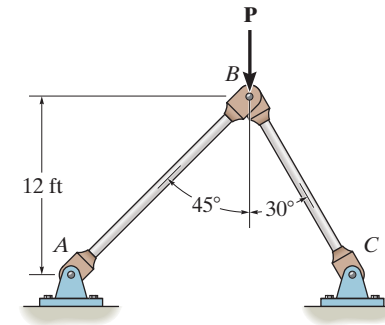

$$I = \frac{\pi}{4}\left(\frac{d}{2}\right)^4 = \frac{\pi d^4}{64}$$

Joint *B*:

$\xrightarrow{+} \Sigma F_x = 0;$ $\quad F_{AB}\cos 45° - F_{BC}\sin 30° = 0$

$$F_{AB} = 0.7071\, F_{BC} \qquad (1)$$

$+\uparrow \Sigma F_y = 0;$ $\quad F_{AB}\sin 45° + F_{BC}\cos 30° - 6 = 0 \qquad (2)$

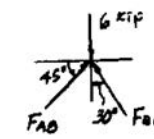

Solving Eqs. (1) and (2) yields:

$F_{BC} = 4.392$ kip $\qquad F_{AB} = 3.106$ kip

For rod *AB*:

$$P_{cr} = 3.106\,(1.8) = 5.591 \text{ kip}$$

$$K = 1.0 \qquad L_{AB} = \frac{12(12)}{\cos 45°} = 203.64 \text{ in.}$$

$$P_{cr} = \frac{\pi^2 EI}{(KL)^2}$$

$$5.591 = \frac{\pi^2(29)(10^3)\left(\frac{d_{AB}^4}{64}\right)}{[(1.0)(203.64)]^2}$$

$$d_{AB} = 2.015 \text{ in.} \quad \text{Use } d_{AB} = 2\tfrac{1}{8} \text{ in.} \qquad \textbf{Ans.}$$

Check:

$$\sigma_{cr} = \frac{P_{cr}}{A} = \frac{5.591}{\frac{\pi}{4}(2.125^2)} = 1.58 \text{ ksi} < \sigma_Y \quad \text{OK}$$

For rod *BC*:

$$P_{cr} = 4.392\,(1.8) = 7.9056 \text{ kip}$$

$$K = 1.0 \qquad L_{BC} = \frac{12(12)}{\cos 30°} = 166.28 \text{ in.}$$

$$P_{cr} = \frac{\pi^2 EI}{(KL)^2}$$

$$7.9056 = \frac{\pi^2(29)(10^3)\left(\frac{\pi d_{BC}^4}{64}\right)}{[(1.0)(166.28)]^2}$$

$$d_{BC} = 1.986 \text{ in.}$$

Use $d_{BC} = 2$ in. **Ans.**

Check:

$$\sigma_{cr} = \frac{P_{cr}}{A} = \frac{7.9056}{\frac{\pi}{4}(2^2)} = 2.52 \text{ ksi} < \sigma_Y \quad \text{OK}$$

Ans:
Use $d_{AB} = 2\frac{1}{8}$ in., $d_{BC} = 2$ in.

13–23. The linkage is made using two A992 steel rods, each having a circular cross section. If each rod has a diameter of $\frac{3}{4}$ in., determine the largest load it can support without causing any rod to buckle. Assume that the rods are pin connected at their ends.

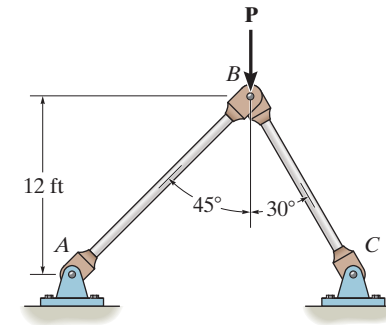

$$\overset{+}{\rightarrow} \Sigma F_x = 0; \qquad F_{AB} \sin 45° - F_{BC} \sin 30° = 0$$

$$+\uparrow \Sigma F_y = 0; \qquad F_{AB} \cos 45° + F_{BC} \cos 30° - P = 0$$

$$F_{AB} = 0.5176\, P$$

$$F_{BC} = 0.73205\, P$$

$$L_{AB} = \frac{12}{\cos 45°} = 16.971 \text{ ft}$$

$$L_{BC} = \frac{12}{\cos 30°} = 13.856 \text{ ft}$$

Assume Rod *AB* Buckles:

$$P_{cr} = \frac{\pi^2 EI}{(KL)^2}$$

$$0.5176\, P = \frac{\pi^2 (29)(10^6)\left(\frac{\pi}{4}\right)\left(\frac{3}{8}\right)^4}{(1.0(16.971)(12))^2}$$

$$P = 207 \text{ lb} \qquad \text{(controls)}$$ **Ans.**

$$\sigma_{cr} = \frac{P_{cr}}{A} = \frac{207}{\pi\left(\frac{3}{8}\right)^2} = 469 \text{ psi} < \sigma_Y \qquad \text{OK}$$

Assume Rod *BC* Buckles:

$$0.73205\, P = \frac{\pi^2 (29)(10^6)\left(\frac{\pi}{4}\right)\left(\frac{3}{8}\right)^4}{(1.0(13.856)(12))^2}$$

$$P = 220 \text{ lb}$$

Ans:
$P = 207$ lb

***13–24.** An L-2 tool steel link in a forging machine is pin connected to the forks at its ends as shown. Determine the maximum load P it can carry without buckling. Use a factor of safety with respect to buckling of F.S. = 1.75. Note from the figure on the left that the ends are pinned for buckling, whereas from the figure on the right the ends are fixed.

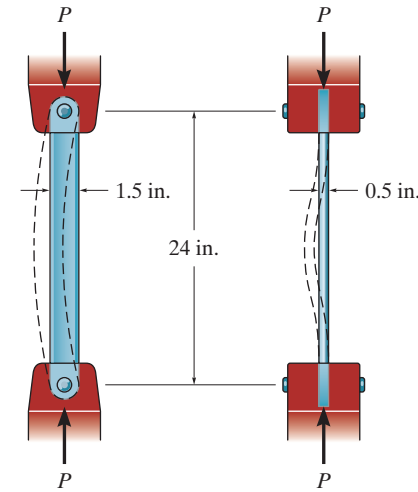

Section Properties:

$$A = 1.5(0.5) = 0.750 \text{ in}^2$$

$$I_x = \frac{1}{12}(0.5)\left(1.5^3\right) = 0.140625 \text{ in}^4$$

$$I_y = \frac{1}{12}(1.5)\left(0.5^3\right) = 0.015625 \text{ in}^4$$

Critical Buckling Load: With respect to the $x - x$ axis, $K = 1$ (column with both ends pinned). Applying *Euler's* formula,

$$P_{cr} = \frac{\pi^2 EI}{(KL)^2}$$

$$= \frac{\pi^2(29.0)(10^3)(0.140625)}{[1(24)]^2}$$

$$= 69.88 \text{ kip}$$

With respect to the $y - y$ axis, $K = 0.5$ (column with both ends fixed).

$$P_{cr} = \frac{\pi^2 EI}{(KL)^2}$$

$$= \frac{\pi^2(29.0)(10^3)(0.015625)}{[0.5(24)]^2}$$

$$= 31.06 \text{ kip} \qquad (\textit{Controls!})$$

Critical Stress: *Euler's* formula is only valid if $\sigma_{cr} < \sigma_\gamma$.

$$\sigma_{cr} = \frac{P_{cr}}{A} = \frac{31.06}{0.75} = 41.41 \text{ ksi} < \sigma_\gamma = 102 \text{ ksi} \qquad \text{O.K.}$$

Factor of Safety:

$$\text{F.S} = \frac{P_{cr}}{P}$$

$$1.75 = \frac{31.06}{P}$$

$$P = 17.7 \text{ kip} \qquad \textbf{Ans.}$$

13–25. The W14 × 30 is used as a structural A992 steel column that can be assumed pinned at both of its ends. Determine the largest axial force P that can be applied without causing it to buckle.

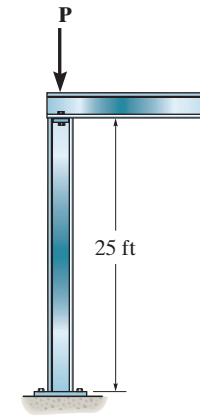

From the table in appendix, the cross-sectional area and the moment of inertia about weak axis (y-axis) for $W14 \times 30$ are

$$A = 8.85 \text{ in}^2 \qquad I_y = 19.6 \text{ in}^4$$

Critical Buckling Load: Since the column is pinned at its base and top, $K = 1$. For A992 steel, $E = 29.0(10^3)$ ksi and $\sigma_\gamma = 50$ ksi. Here, the buckling occurs about the weak axis (y-axis).

$$P = P_{cr} = \frac{\pi^2 E I_y}{(KL)^2} = \frac{\pi^2\left[29.0(10^3)\right](19.6)}{\left[1(25)(12)\right]^2}$$

$$= 62.33 \text{ kip} = 62.3 \text{ kip} \qquad \textbf{Ans.}$$

Euler's formula is valid only if $\sigma_{cr} < \sigma_\gamma$.

$$\sigma_{cr} = \frac{P_{cr}}{A} = \frac{62.33}{8.85} = 7.04 \text{ ksi} < \sigma_\gamma = 50 \text{ ksi} \qquad \text{O.K.}$$

Ans:
$P = 62.3$ kip

13–26. The A992 steel bar AB has a square cross section. If it is pin connected at its ends, determine the maximum allowable load P that can be applied to the frame. Use a factor of safety with respect to buckling of 2.

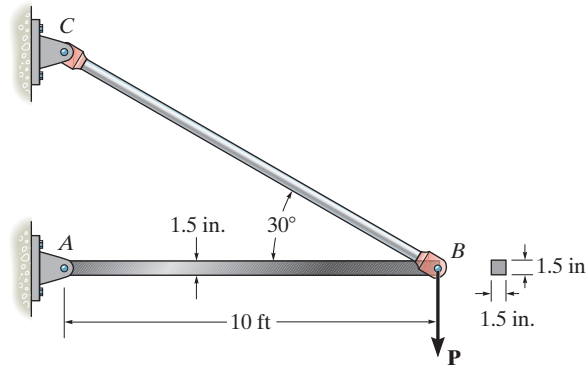

$$\circlearrowleft + \Sigma M_A = 0; \qquad F_{BC} \sin 30°(10) - P(10) = 0$$

$$F_{BC} = 2\,P$$

$$\overset{+}{\rightarrow} \Sigma F_x = 0; \qquad F_A - 2P \cos 30° = 0$$

$$F_A = 1.732\,P$$

Buckling Load:

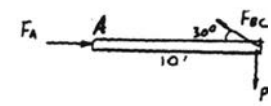

$$P_{cr} = F_A(\text{F.S.}) = 1.732\,P(2) = 3.464\,P$$

$$L = 10(12) = 120 \text{ in.}$$

$$I = \frac{1}{12}(1.5)(1.5)^3 = 0.421875 \text{ in}^4$$

$$P_{cr} = \frac{\pi^2 EI}{(KL)^2}$$

$$3.464\,P = \frac{\pi^2 (29)(10^3)(0.421875)}{[(1.0)(120)]^2}$$

$$P = 2.42 \text{ kip} \qquad \textbf{Ans.}$$

$$P_{cr} = F_A(\text{F.S.}) = 1.732(2.42)(2) = 8.38 \text{ kip}$$

Check:

$$\sigma_{cr} = \frac{P_{cr}}{A} = \frac{8.38}{1.5\,(1.5)} = 3.72 \text{ ksi} < \sigma_\gamma \qquad \text{O.K.}$$

Ans:
$P = 2.42$ kip

13–27. The strongback BC is made of an A992 steel hollow circular section with $d_o = 60$ mm and $d_i = 40$ mm. Determine the allowable maximum lifting force **P** without causing the strong back to buckle. F.S. = 2 against buckling is desired.

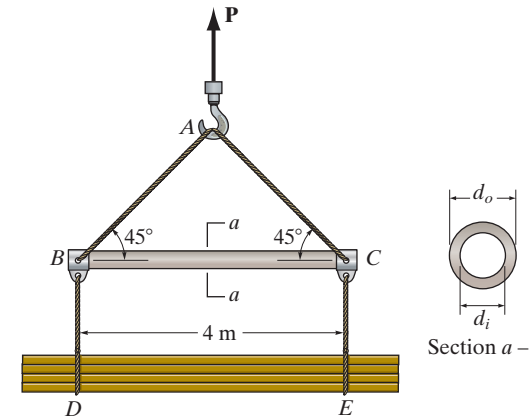

Equilibrium. The compressive force developed in the strongback can be determined by analyzing the equilibrium of joint A followed by joint B.

Joint *A* (Fig. *a*)

$\xrightarrow{+} \Sigma F_x = 0; \qquad F_{AC} \cos 45° - F_{AB} \cos 45° = 0 \qquad F_{AC} = F_{AB} = F$

$+\uparrow \Sigma F_y = 0; \qquad P - 2F \sin 45° = 0 \qquad F_{AB} = F_{AC} = F = 0.7071\,P$

Joint *B* (Fig. *b*)

$\xrightarrow{+} \Sigma F_x = 0; \qquad 0.7071P \cos 45° - F_{BC} = 0 \qquad F_{BC} = 0.5P$

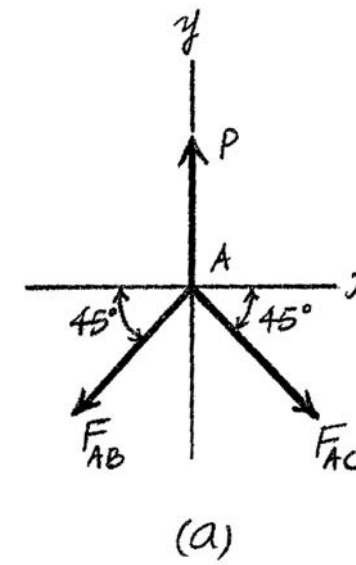

Section Properties. The cross-sectional area and moment of inertia are

$$A = \pi(0.03^2 - 0.02^2) = 0.5(10^{-3})\pi\,\text{m}^2 \quad I = \frac{\pi}{4}(0.03^4 - 0.02^4) = 0.1625(10^{-6})\pi\,\text{m}^4$$

Critical Buckling Load. Both ends can be considered as pin connections. Thus, $K = 1$. The critical buckling load is

$$P_{cr} = F_{BC}\,(\text{F.S.}) = 0.5P(2) = P$$

Applying Euler's formula,

$$P_{cr} = \frac{\pi^2 EI}{(KL)^2}$$

$$P = \frac{\pi^2[200(10^9)][0.1625(10^{-6})\pi]}{[1(4)]^2}$$

$$P = 62.98\text{ kN} = 63.0\text{ kN} \qquad \textbf{Ans.}$$

Critical Stress. Euler's formula is valid only if $\sigma_{cr} < \sigma_Y$.

$$\sigma_{cr} = \frac{P_{cr}}{A} = \frac{62.98(10^3)}{0.5(10^{-3})\pi} = 40.10\text{ MPa} < \sigma_Y = 345\text{ MPa} \qquad \text{(O.K.)}$$

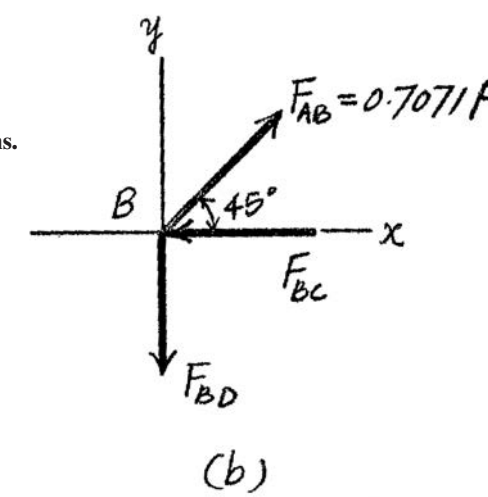

Ans:
$P = 63.0$ kN

***13–28.** The strongback is made of an A992 steel hollow circular section with the outer diameter of $d_o = 60$ mm. If it is designed to withstand the lifting force of $P = 60$ kN, determine the minimum required wall thickness of the strong back so that it will not buckle. Use F.S. = 2 against buckling.

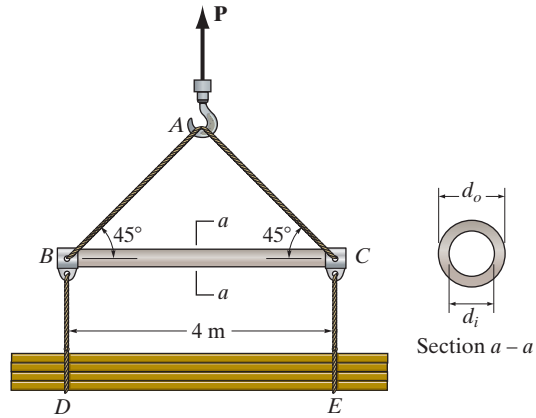

Equilibrium. The compressive force developed in the strongback can be determined by analyzing the equilibrium of joint A followed by joint B.

Joint *A* (Fig. *a*)

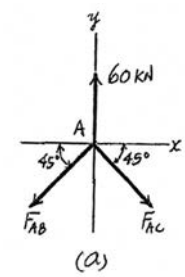

$\xrightarrow{+} \Sigma F_x = 0; \quad F_{AC} \cos 45° - F_{AB} \cos 45° = 0 \quad F_{AC} = F_{AB} = F$

$+\uparrow \Sigma F_y = 0; \quad 60 - 2F \sin 45° = 0 \quad F_{AB} = F_{AC} = F = 42.43 \text{ kN (T)}$

Joint *B* (Fig. *b*)

$\xrightarrow{+} \Sigma F_x = 0; \quad 42.43 \cos 45° - F_{BC} = 0 \quad F_{BC} = 30 \text{ kN (C)}$

Section Properties. The cross-sectional area and moment of inertia are

$$A = \frac{\pi}{4}(0.06^2 - d_i^2) \quad I = \frac{\pi}{4}\left[0.03^4 - \left(\frac{d_i}{2}\right)^4\right] = \frac{\pi}{64}(0.06^4 - d_i^4)$$

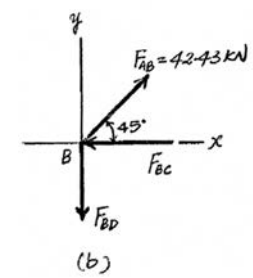

Critical Buckling Load. Both ends can be considered as pin connections. Thus, $K = 1$. The critical buckling load is

$$P_{cr} = F_{BC}(\text{F.S.}) = 30(2) = 60 \text{ kN}$$

Applying Euler's formula,

$$P_{cr} = \frac{\pi^2 EI}{(KL)^2}$$

$$60(10^3) = \frac{\pi^2[200(10^9)]\left[\frac{\pi}{64}(0.06^4 - d_i^4\right]}{[1(4)]^2}$$

$$d_i = 0.04180 \text{ m} = 41.80 \text{ mm}$$

Thus, $t = \dfrac{d_a - d_i}{2} = \dfrac{60 - 41.80}{2} = 9.10 \text{ mm}$ **Ans.**

Critical Stress. Euler's formula is valid only if $\sigma_{cr} < \sigma_Y$.

$$\sigma_{cr} = \frac{P_{cr}}{A} = \frac{60(10^3)}{\frac{\pi}{4}(0.06^2 - 0.04180^2)} = 41.23 \text{ MPa} < \sigma_Y = 345 \text{ MPa} \quad \text{(O.K.)}$$

13–29. The beam supports the load of $P = 6$ kip. As a result, the A992 steel member BC is subjected to a compressive load. Due to the forked ends on the member, consider the supports at B and C to act as pins for x–x axis buckling and as fixed supports for y–y axis buckling. Determine the factor of safety with respect to buckling about each of these axes.

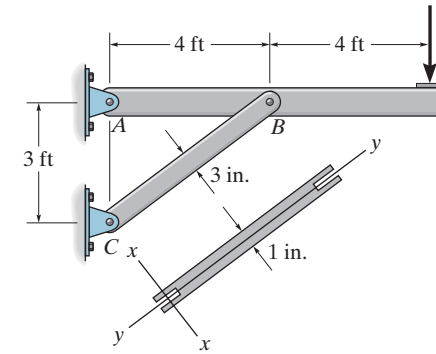

$$\circlearrowleft + \Sigma M_A = 0; \qquad F_{BC}\left(\frac{3}{5}\right)(4) - 6000(8) = 0$$

$$F_{BC} = 20 \text{ kip}$$

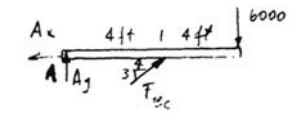

x–x axis Buckling:

$$P_{cr} = \frac{\pi^2 EI}{(KL)^2} = \frac{\pi^2(29)(10^3)(\frac{1}{12})(1)(3)^3}{(1.0(5)(12))^2} = 178.9 \text{ kip}$$

$$\text{F.S.} = \frac{178.9}{20} = 8.94 \qquad \textbf{Ans.}$$

y–y axis Buckling:

$$P_{cr} = \frac{\pi^2 EI}{(KL)^2} = \frac{\pi^2\,(29)(10^3)(\frac{1}{12})(3)(1)^3}{(0.5(5)(12))^2} = 79.51$$

$$\text{F.S.} = \frac{79.51}{20} = 3.98 \qquad \textbf{Ans.}$$

Ans:
$x-x$ axis buckling: F.S $= 8.94$
$y-y$ axis buckling: F.S $= 3.98$

13–30. Determine the greatest load P the beam will support without causing the A992 steel member BC to buckle. Due to the forked ends on the member, consider the supports at B and C to act as pins for x–x axis buckling and as fixed supports for y–y axis buckling.

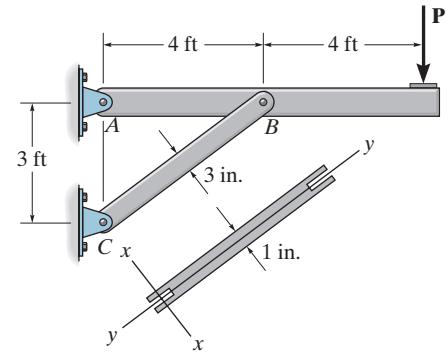

$$\circlearrowleft + \Sigma M_A = 0; \qquad F_{BC}\left(\frac{3}{5}\right)(4) - P(8) = 0$$

$$F_{BC} = 3.33\,P$$

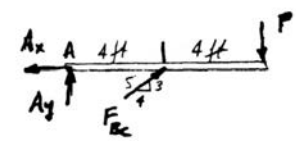

x–x axis Buckling:

$$P_{cr} = \frac{\pi^2 EI}{(KL)^2} = \frac{\pi^2(29)(10^3)(\frac{1}{12})(1)(3)^3}{(1.0(5)(12))^2} = 178.9 \text{ kip}$$

y–y axis Buckling:

$$P_{cr} = \frac{\pi^2 EI}{(KL)^2} = \frac{\pi^2(29)(10^3)(\frac{1}{12})(3)(1)^3}{(0.5(5)(12))^2} = 79.51 \text{ kip}$$

Thus,

$3.33\,P = 79.51$

$P = 23.9$ kip **Ans.**

Ans:
$P = 23.9$ kip

13–31. The steel bar AB has a rectangular cross section. If it is pin connected at its ends, determine the maximum allowable intensity w of the distributed load that can be applied to BC without causing bar AB to buckle. Use a factor of safety with respect to buckling of 1.5. $E_{st} = 200$ GPa, $\sigma_Y = 360$ MPa.

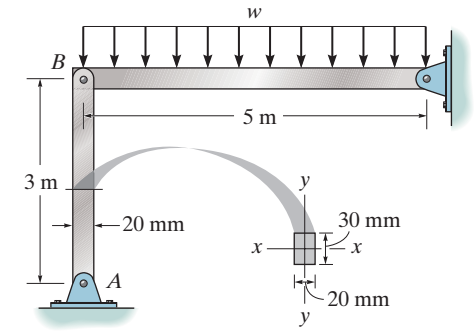

Buckling Load:

$$P_{cr} = F_{AB}(\text{F.S.}) = 2.5\,w(1.5) = 3.75\,w$$

$$I = \frac{1}{12}(0.03)(0.02)^3 = 20\,(10^{-9})\ \text{m}^4$$

$$K = 1.0$$

$$P_{cr} = \frac{\pi^2 E I}{(K L)^2}$$

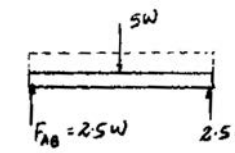

$$3.75\,w = \frac{\pi^2(200)(10^9)(20)(10^{-9})}{[(1.0)(3)]^2}$$

$$w = 1170\ \text{N/m} = 1.17\ \text{kN/m}$$ **Ans.**

$$P_{cr} = 4.39\ \text{kN}$$

Check:

$$\sigma_{cr} = \frac{P_{cr}}{A} = \frac{4.39\,(10^3)}{0.02\,(0.03)} = 7.31\ \text{MPa} < \sigma_Y \qquad \text{OK}$$

Ans:
$w = 1.17$ kN/m

***13–32.** The frame supports the load of $P = 4$ kN. As a result, the A992 steel member BC is subjected to a compressive load. Due to the forked ends on this member, consider the supports at B and C to act as pins for x–x axis buckling and as fixed supports for y–y axis buckling. Determine the factor of safety with respect to buckling about each of these axes.

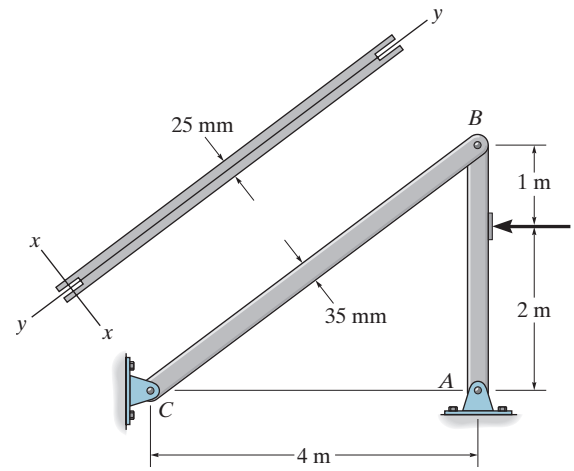

$$\circlearrowleft + \Sigma M_A = 0; \qquad 4(2) - F_{BC}\left(\frac{4}{5}\right)(3) = 0$$

$$F_{BC} = 3.333 \text{ kN}$$

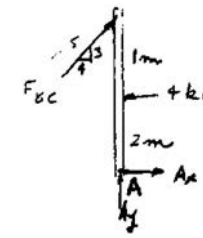

x–x axis Buckling:

$$P_{cr} = \frac{\pi^2 E I}{(K L)^2} = \frac{\pi^2(200)(10^9)\left(\frac{1}{12}\right)(0.025)(0.035)^3}{(1.0(5))^2} = 7.053 \text{ kN}$$

$$\text{F.S.} = \frac{7.053}{3.333} = 2.12 \qquad \textbf{Ans.}$$

y–y axis Buckling:

$$P_{cr} = \frac{\pi^2 E I}{(K L)^2} = \frac{\pi^2(200)(10^9)\left(\frac{1}{12}\right)(0.035)(0.025)^3}{(0.5(5))^2} = 14.39 \text{ kN}$$

$$\text{F.S.} = \frac{14.39}{3.333} = 4.32 \qquad \textbf{Ans.}$$

13–33. Determine the greatest load P the frame will support without causing the A992 steel member BC to buckle. Due to the forked ends on the member, consider the supports at B and C to act as pins for x–x axis buckling and as fixed supports for y–y axis buckling.

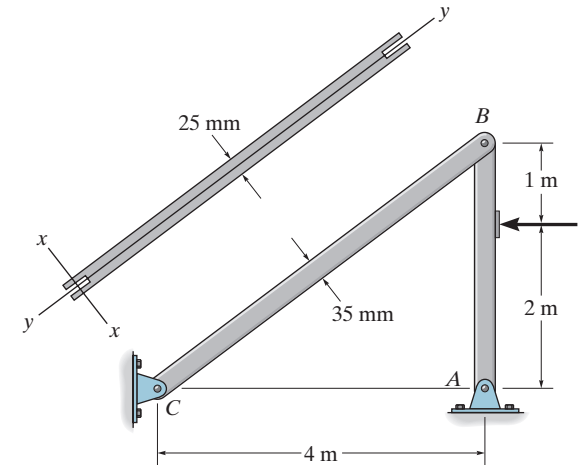

$$\circlearrowleft + \Sigma M_A = 0; \qquad P(2) - 3\left(\frac{4}{5}\right)F_{BC} = 0$$

$$F_{BC} = 0.8333\,P$$

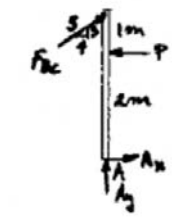

x–x axis Buckling:

$$P_{cr} = \frac{\pi^2 EI}{(KL)^2} = \frac{\pi^2(200)(10^9)\left(\frac{1}{12}\right)(0.025)(0.035)^3}{(1.0(5))^2} = 7.053 \text{ kN}$$

y–y axis Buckling:

$$P_{cr} = \frac{\pi^2 EI}{(KL)^2} = \frac{\pi^2(200)(10^9)\left(\frac{1}{12}\right)(0.035)(0.025)^3}{(0.5(5))^2} = 14.39 \text{ kN}$$

Thus,

$$0.8333\,P = 7.053$$

$$P = 8.46 \text{ kN} \qquad \textbf{Ans.}$$

Ans:
$P = 8.46$ kN

13–34. A 6061-T6 aluminum alloy solid circular rod of length 4 m is pinned at both of its ends. If it is subjected to an axial load of 15 kN and F.S. = 2 is required against buckling, determine the minimum required diameter of the rod to the nearest mm.

Section Properties. The cross-sectional area and moment of inertia of the solid rod are

$$A = \frac{\pi}{4}d^2 \qquad I = \frac{\pi}{4}\left(\frac{d}{2}\right)^4 = \frac{\pi}{64}d^4$$

Critical Buckling Load. The critical buckling load is

$$P_{cr} = P_{allow}(\text{F.S.}) = 15(2) = 30 \text{ kN}$$

Applying Euler's formula,

$$P_{cr} = \frac{\pi^2 E I_y}{(KL)^2}$$

$$30(10^3) = \frac{\pi^2\left[68.9(10^9)\right]\left[\frac{\pi}{64}d^4\right]}{[1(4)]^2}$$

$$d = 0.06158 \text{ m} = 61.58 \text{ mm}$$

Use $d = 62$ mm **Ans.**

Critical Stress. Euler's formula is valid only if $\sigma_{cr} < \sigma_Y$.

$$\sigma_{cr} = \frac{P_{cr}}{A} = \frac{30(10^3)}{\frac{\pi}{4}(0.062^2)} = 9.94 \text{ MPa} < \sigma_Y = 255 \text{ MPa} \quad \text{(O.K.)}$$

Ans:
Use $d = 62$ mm

13–35. A 6061-T6 aluminum alloy solid circular rod of length 4 m is pinned at one end while fixed at the other end. If it is subjected to an axial load of 15 kN and F.S. = 2 is required against buckling, determine the minimum required diameter of the rod to the nearest mm.

Section Properties. The cross-sectional area and moment of inertia of the solid rod are

$$A = \frac{\pi}{4}d^2 \qquad I = \frac{\pi}{4}\left(\frac{d}{2}\right)^4 = \frac{\pi}{64}d^4$$

Critical Buckling Load. The critical buckling load is

$$P_{cr} = P_{allow}(\text{F.S.}) = 15(2) = 30 \text{ kN}$$

Applying Euler's formula,

$$P_{cr} = \frac{\pi^2 E I_y}{(KL)^2}$$

$$30(10^3) = \frac{\pi^2\left[68.9(10^9)\right]\left[\frac{\pi}{64}d^4\right]}{[0.7(4)]^2}$$

$$d = 0.05152 \text{ m} = 51.52 \text{ mm}$$

Use $d = 52$ mm **Ans.**

Critical Stress. Euler's formula is valid only if $\sigma_{cr} < \sigma_Y$.

$$\sigma_{cr} = \frac{P_{cr}}{A} = \frac{30(10^3)}{\frac{\pi}{4}(0.052^2)} = 14.13 \text{ MPa} < \sigma_Y = 255 \text{ MPa} \qquad \text{(O.K.)}$$

Ans:
Use $d = 52$ mm

***13–36.** The members of the truss are assumed to be pin connected. If member BD is an A992 steel rod of radius 2 in., determine the maximum load P that can be supported by the truss without causing the member to buckle.

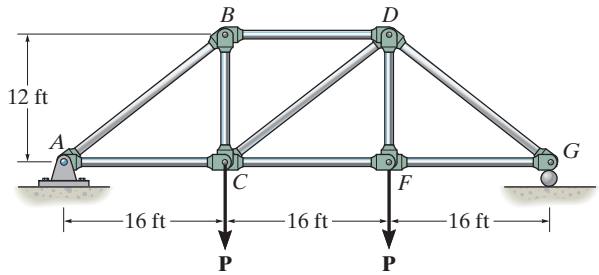

$\circlearrowleft + \Sigma M_C = 0;$ $\qquad F_{BD}(12) - P(16) = 0$

$$F_{BD} = \frac{4}{3}P$$

Buckling Load:

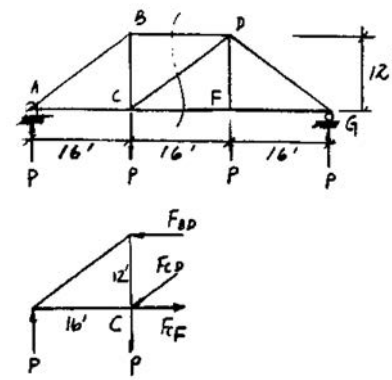

$$A = \pi(2^2) = 4\pi \text{ in}^2$$

$$I = \frac{\pi}{4}(2^4) = 4\pi \text{ in}^4$$

$$L = 16(12) = 192 \text{ in.}$$

$$K = 1.0$$

$$P_{cr} = \frac{\pi^2 EI}{(KL)^2}$$

$$F_{BD} = \frac{4}{3}P = \frac{\pi^2(29)(10^3)(4\pi)}{[(1.0)(192)]^2}$$

$$P = 73.2 \text{ kip}$$ **Ans.**

$$P_{cr} = F_{BD} = 97.56 \text{ kip}$$

Check:

$$\sigma_{cr} = \frac{P_{cr}}{A} = \frac{97.56}{4\pi} = 7.76 \text{ ksi} < \sigma_Y \qquad \text{OK}$$

13–37. Solve Prob. 13–36 in the case of member AB, which has a radius of 2 in.

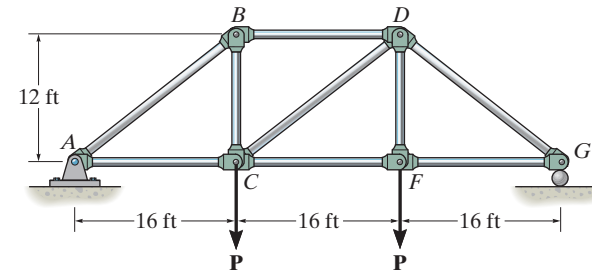

$+\uparrow \Sigma F_y = 0;$ $\qquad P - \frac{3}{5}F_{AB} = 0$

$$F_{AB} = 1.667\,P$$

Buckling Load:

$$A = \pi(2)^2 = 4\pi \text{ in}^2$$

$$I = \frac{\pi}{4}(2)^4 = 4\pi \text{ in}^4$$

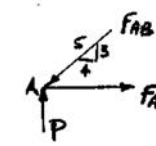

$$L = 20(12) = 240 \text{ in.}$$

$$K = 1.0$$

$$P_{cr} = \frac{\pi^2 EI}{(KL)^2} = \frac{\pi^2(29)(10^3)(4\pi)}{(1.0(240))^2} = 62.443 \text{ kip}$$

$$P_{cr} = F_{AB} = 1.667\,P = 62.443$$

$$P = 37.5 \text{ kip} \qquad \textbf{Ans.}$$

Check:

$$\sigma_{cr} = \frac{P}{A} = \frac{62.443}{4\pi} = 4.97 \text{ ksi} < \sigma_Y \qquad \text{OK}$$

Ans:
$P = 37.5$ kip

13–38. The truss is made from A992 steel bars, each of which has a circular cross section with a diameter of 1.5 in. Determine the maximum force P that can be applied without causing any of the members to buckle. The members are pin connected at their ends.

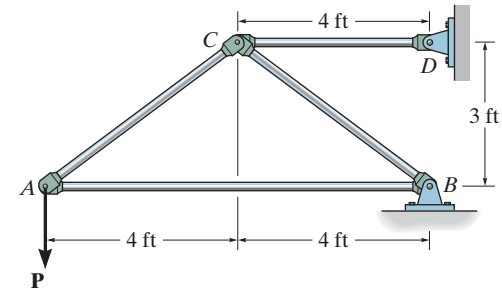

$$I = \frac{\pi}{4}(0.75^4) = 0.2485 \text{ in}^4$$

$$A = \pi(0.75^2) = 1.7671 \text{ in}^2$$

Members *AB* and *BC* are in compression:

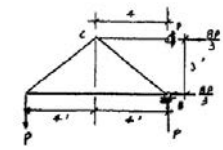

Joint *A*:

$$+\uparrow \Sigma F_y = 0; \qquad \frac{3}{5}F_{AC} - P = 0$$

$$F_{AC} = \frac{5P}{3}$$

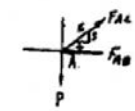

$$\overset{+}{\leftarrow} \Sigma F_x = 0; \qquad F_{AB} - \frac{4}{5}\left(\frac{5P}{3}\right) = 0$$

$$F_{AB} = \frac{4P}{3}$$

Joint *B*:

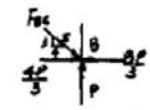

$$\overset{+}{\rightarrow} \Sigma F_x = 0; \qquad \frac{4}{5}F_{BC} + \frac{4P}{3} - \frac{8P}{3} = 0$$

$$F_{BC} = \frac{5P}{3}$$

Failure of rod *AB*:

$$K = 1.0 \qquad L = 8(12) = 96 \text{ in.}$$

$$P_{cr} = \frac{\pi^2 EI}{(KL)^2}$$

$$F_{AB} = \frac{4P}{3} = \frac{\pi^2(29)(10^3)(0.2485)}{((1.0)(96))^2}$$

$P = 5.79$ kip (controls) **Ans.**

Check:

$$P_{cr} = F_{AB} = 7.72 \text{ kip}$$

$$\sigma_{cr} = \frac{P_{cr}}{A} = \frac{7.72}{1.7671} = 4.37 \text{ ksi} < \sigma_Y \qquad \text{OK}$$

Failure of rod *BC*:

$$K = 1.0 \qquad L = 5(12) = 60 \text{ in.}$$

$$F_{BC} = \frac{5P}{3} = \frac{\pi^2(29)(10^3)(0.2485)}{[(1.0)(60)]^2}$$

$P = 11.9$ kip

Ans:
$P = 5.79$ kip

13–39. The truss is made from A992 steel bars, each of which has a circular cross section. If the applied load $P = 10$ kip, determine the diameter of member AB to the nearest $\frac{1}{8}$ in. that will prevent this member from buckling. The members are pin connected at their ends.

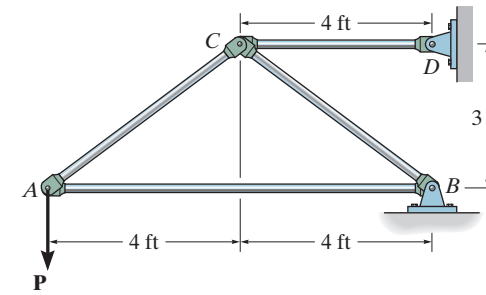

Joint *A*:

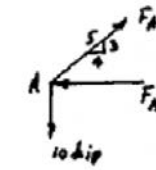

$$+\uparrow \Sigma F_y = 0; \qquad -10 + F_{AC}\left(\frac{3}{5}\right) = 0; \qquad F_{AC} = 16.667 \text{ kip}$$

$$\overset{+}{\rightarrow} \Sigma F_x = 0; \qquad -F_{AB} + 16.667\left(\frac{4}{5}\right) = 0; \qquad F_{AB} = 13.33 \text{ kip}$$

$$P_{cr} = \frac{\pi^2 EI}{(KL)^2}$$

$$13.33 = \frac{\pi^2(29)(10^3)\left(\frac{\pi}{4}\right)(r)^4}{(1.0(8)(12))^2}$$

$$r = 0.8599 \text{ in.}$$

$$d = 2r = 1.72 \text{ in.}$$

Use:

$$d = 1\frac{3}{4} \text{ in.}$$ **Ans.**

Check:

$$\sigma_{cr} = \frac{P_{cr}}{A} = \frac{13.33}{\frac{\pi}{4}(1.75)^2} = 5.54 \text{ ksi} < \sigma_Y \qquad \text{OK}$$

Ans:

Use $d = 1\frac{3}{4}$ in.

***13–40.** The steel bar AB of the frame is assumed to be pin connected at its ends for y–y axis buckling. If $P = 18$ kN, determine the factor of safety with respect to buckling about the y–y axis due to the applied loading. $E_{st} = 200$ GPa, $\sigma_Y = 300$ MPa.

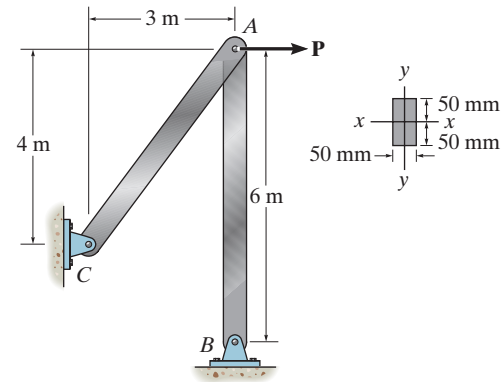

$$I_y = \frac{1}{12}(0.10)(0.05^3) = 1.04167\,(10^{-6})\ \text{m}^4$$

Joint *A*:

$$\overset{+}{\leftarrow} \Sigma F_x = 0; \qquad \frac{3}{5}F_{AC} - 18 = 0$$

$$F_{AC} = 30\ \text{kN}$$

$$+\uparrow \Sigma F_y = 0; \qquad F_{AB} - \frac{4}{5}(30) = 0$$

$$F_{AB} = 24\ \text{kN}$$

$$P_{cr} = \frac{\pi^2 EI}{(KL)^2} = \frac{\pi^2(200)(10^9)(1.04167)(10^{-6})}{[(1.0)(6)]^2} = 57116\ \text{N} = 57.12\ \text{kN}$$

$$\text{F.S.} = \frac{P_{cr}}{F_{AB}} = \frac{57.12}{24} = 2.38 \qquad \textbf{Ans.}$$

Check:

$$\sigma_{cr} = \frac{P_{cr}}{A} = \frac{57.12\,(10^3)}{0.1\,(0.05)} = 11.4\ \text{MPa} < \sigma_Y \qquad \text{OK}$$

13–41. The ideal column has a weight w (force/length) and rests in the horizontal position when it is subjected to the axial load **P**. Determine the maximum moment in the column at midspan. EI is constant. *Hint:* Establish the differential equation for deflection, Eq. 13–1, with the origin at the mid span. The general solution is $v = C_1 \sin kx + C_2 \cos kx + (w/(2P))x^2 - (wL/(2P))x - (wEI/P^2)$ where $k^2 = P/EI$.

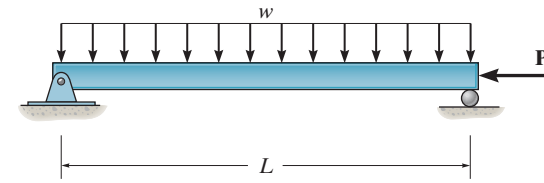

Moment Functions: FBD(b).

$$\circlearrowleft + \Sigma M_o = 0; \qquad wx\left(\frac{x}{2}\right) - M(x) - \left(\frac{wL}{2}\right)x - Pv = 0$$

$$M(x) = \frac{w}{2}\left(x^2 - Lx\right) - Pv \qquad [1]$$

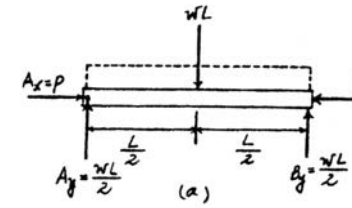

Differential Equation of The Elastic Curve:

$$EI\frac{d^2v}{dx^2} = M(x)$$

$$EI\frac{d^2v}{dx^2} = \frac{w}{2}\left(x^2 - Lx\right) - Pv$$

$$\frac{d^2v}{dx^2} + \frac{P}{EI}v = \frac{w}{2EI}\left(x^2 - Lx\right)$$

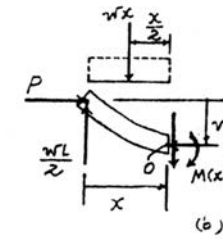

The solution of the above differential equation is of the form

$$v = C_1 \sin\left(\sqrt{\frac{P}{EI}}x\right) + C_2 \cos\left(\sqrt{\frac{P}{EI}}x\right) + \frac{w}{2P}x^2 - \frac{wL}{2P}x - \frac{wEI}{P^2} \qquad [2]$$

and

$$\frac{dv}{dx} = C_1\sqrt{\frac{P}{EI}}\cos\left(\sqrt{\frac{P}{EI}}x\right) - C_2\sqrt{\frac{P}{EI}}\sin\left(\sqrt{\frac{P}{EI}}x\right) + \frac{w}{P}x - \frac{wL}{2P} \qquad [3]$$

The integration constants can be determined from the boundary conditions.

Boundary Condition:

At $x = 0, v = 0$. From Eq. [2],

$$0 = C_2 - \frac{wEI}{P^2} \qquad C_2 = \frac{wEI}{P^2}$$

At $x = \frac{L}{2}, \frac{dv}{dx} = 0$. From Eq.[3],

$$0 = C_1\sqrt{\frac{P}{EI}}\cos\left(\sqrt{\frac{P}{EI}}\frac{L}{2}\right) - \frac{wEI}{P^2}\sqrt{\frac{P}{EI}}\sin\left(\sqrt{\frac{P}{EI}}\frac{L}{2}\right) + \frac{w}{P}\left(\frac{L}{2}\right) - \frac{wL}{2P}$$

$$C_1 = \frac{wEI}{P^2}\tan\left(\sqrt{\frac{P}{EI}}\frac{L}{2}\right)$$

13–41. Continued

Elastic Curve:

$$v = \frac{w}{P}\left[\frac{EI}{P}\tan\left(\sqrt{\frac{P}{EI}}\frac{L}{2}\right)\sin\left(\sqrt{\frac{P}{EI}}x\right) + \frac{EI}{P}\cos\left(\sqrt{\frac{P}{EI}}x\right) + \frac{x^2}{2} - \frac{L}{2}x - \frac{EI}{P}\right]$$

However, $v = v_{\max}$ at $x = \frac{L}{2}$. Then,

$$v_{\max} = \frac{w}{P}\left[\frac{EI}{P}\tan\left(\sqrt{\frac{P}{EI}}\frac{L}{2}\right)\sin\left(\sqrt{\frac{P}{EI}}\frac{L}{2}\right) + \frac{EI}{P}\cos\left(\sqrt{\frac{P}{EI}}\frac{L}{2}\right) - \frac{L^2}{8} - \frac{EI}{P}\right]$$

$$= \frac{wEI}{P^2}\left[\sec\left(\sqrt{\frac{P}{EI}}\frac{L}{2}\right) - \frac{PL^2}{8EI} - 1\right]$$

Maximum Moment: The maximum moment occurs at $x = \frac{L}{2}$. From, Eq.[1],

$$M_{\max} = \frac{w}{2}\left[\frac{L^2}{4} - L\left(\frac{L}{2}\right)\right] - Pv_{\max}$$

$$= -\frac{wL^2}{8} - P\left\{\frac{wEI}{P^2}\left[\sec\left(\sqrt{\frac{P}{EI}}\frac{L}{2}\right) - \frac{PL^2}{8EI} - 1\right]\right\}$$

$$= -\frac{wEI}{P}\left[\sec\left(\sqrt{\frac{P}{EI}}\frac{L}{2}\right) - 1\right] \qquad \textbf{Ans.}$$

Ans:

$$M_{\max} = -\frac{wEI}{P}\left[\sec\left(\frac{L}{2}\sqrt{\frac{P}{EI}}\right) - 1\right]$$

13–42. The ideal column is subjected to the force **F** at its midpoint and the axial load **P**. Determine the maximum moment in the column at midspan. EI is constant. *Hint:* Establish the differential equation for deflection, Eq. 13–1. The general solution is $v = C_1 \sin kx + C_2 \cos kx - c^2x/k^2$, where $c^2 = F/2EI$, $k^2 = P/EI$.

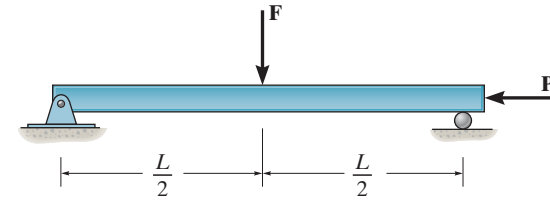

Moment Functions: FBD(b).

$$\circlearrowleft + \Sigma M_o = 0; \qquad M(x) + \frac{F}{2}x + P(v) = 0$$

$$M(x) = -\frac{F}{2}x - Pv \qquad [1]$$

Differential Equation of The Elastic Curve:

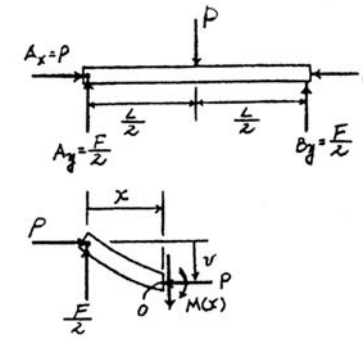

$$EI\frac{d^2v}{dx^2} = M(x)$$

$$EI\frac{d^2v}{dx^2} = -\frac{F}{2}x - Pv$$

$$\frac{d^2v}{dx^2} + \frac{P}{EI}v = -\frac{F}{2EI}x$$

The solution of the above differential equation is of the form,

$$v = C_1 \sin\left(\sqrt{\frac{P}{EI}}\,x\right) + C_2 \cos\left(\sqrt{\frac{P}{EI}}\,x\right) - \frac{F}{2P}x \qquad [2]$$

and

$$\frac{dv}{dx} = C_1\sqrt{\frac{P}{EI}}\cos\left(\sqrt{\frac{P}{EI}}\,x\right) - C_2\sqrt{\frac{P}{EI}}\sin\left(\sqrt{\frac{P}{EI}}\,x\right) - \frac{F}{2P} \qquad [3]$$

The integration constants can be determined from the boundary conditions.

Boundary Conditions:

At $x = 0, v = 0$. From Eq.[2], $C_2 = 0$

At $x = \frac{L}{2}, \frac{dv}{dx} = 0$. From Eq.[3],

$$0 = C_1\sqrt{\frac{P}{EI}}\cos\left(\sqrt{\frac{P}{EI}}\frac{L}{2}\right) - \frac{F}{2P}$$

$$C_1 = \frac{F}{2P}\sqrt{\frac{EI}{P}}\sec\left(\sqrt{\frac{P}{EI}}\frac{L}{2}\right)$$

Elastic Curve:

$$v = \frac{F}{2P}\sqrt{\frac{EI}{P}}\sec\left(\sqrt{\frac{P}{EI}}\frac{L}{2}\right)\sin\left(\sqrt{\frac{P}{EI}}\,x\right) - \frac{F}{2P}x$$

$$= \frac{F}{2P}\left[\sqrt{\frac{EI}{P}}\sec\left(\sqrt{\frac{P}{EI}}\frac{L}{2}\right)\sin\left(\sqrt{\frac{P}{EI}}\,x\right) - x\right]$$

13–42. Continued

However, $v = v_{max}$ at $x = \frac{L}{2}$. Then,

$$v_{max} = \frac{F}{2P}\left[\sqrt{\frac{EI}{P}}\sec\left(\sqrt{\frac{P}{EI}}\frac{L}{2}\right)\sin\left(\sqrt{\frac{P}{EI}}\frac{L}{2}\right) - \frac{L}{2}\right]$$

$$= \frac{F}{2P}\left[\sqrt{\frac{EI}{P}}\tan\left(\sqrt{\frac{P}{EI}}\frac{L}{2}\right) - \frac{L}{2}\right]$$

Maximum Moment: The maximum moment occurs at $x = \frac{L}{2}$. From Eq.[1],

$$M_{max} = -\frac{F}{2}\left(\frac{L}{2}\right) - Pv_{max}$$

$$= -\frac{FL}{4} - P\left\{\frac{F}{2P}\left[\sqrt{\frac{EI}{P}}\tan\left(\sqrt{\frac{P}{EI}}\frac{L}{2}\right) - \frac{L}{2}\right]\right\}$$

$$= -\frac{F}{2}\sqrt{\frac{EI}{P}}\tan\left(\sqrt{\frac{P}{EI}}\frac{L}{2}\right) \qquad \textbf{Ans.}$$

Ans:

$$M_{max} = -\frac{F}{2}\sqrt{\frac{EI}{P}}\tan\left(\frac{L}{2}\sqrt{\frac{P}{EI}}\right)$$

13–43. The column with constant EI has the end constraints shown. Determine the critical load for the column.

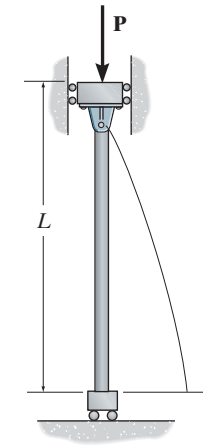

Moment Function. Referring to the free-body diagram of the upper part of the deflected column, Fig. a,

$$\circlearrowleft + \Sigma M_O = 0; \qquad M + Pv = 0 \qquad M = -Pv$$

Differential Equation of the Elastic Curve.

$$EI\frac{d^2v}{dx^2} = M$$

$$EI\frac{d^2v}{dx^2} = -Pv$$

$$\frac{d^2v}{dx^2} + \frac{P}{EI}v = 0$$

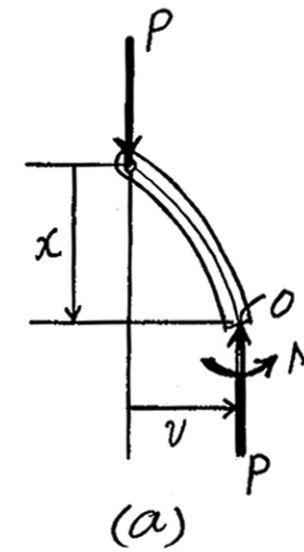

The solution is in the form of

$$v = C_1 \sin\left(\sqrt{\frac{P}{EI}}\,x\right) + C_2 \cos\left(\sqrt{\frac{P}{EI}}\,x\right) \qquad (1)$$

$$\frac{dv}{dx} = C_1\sqrt{\frac{P}{EI}}\cos\left(\sqrt{\frac{P}{EI}}\,x\right) - C_2\sqrt{\frac{P}{EI}}\sin\left(\sqrt{\frac{P}{EI}}\,x\right) \qquad (2)$$

Boundary Conditions. At $x = 0, v = 0$. Then Eq. (1) gives

$$0 = 0 + C_2 \qquad C_2 = 0$$

At $x = L, \dfrac{dv}{dx} = 0$. Then Eq. (2) gives

$$0 = C_1\sqrt{\frac{P}{EI}}\cos\left(\sqrt{\frac{P}{EI}}\,L\right)$$

$C_1 = 0$ is the trivial solution, where $v = 0$. This means that the column will remain straight and buckling will not occur regardless of the load P. Another possible solution is

$$\cos\left(\sqrt{\frac{P}{EI}}\,L\right) = 0$$

$$\sqrt{\frac{P}{EI}}\,L = \frac{n\pi}{2} \qquad n = 1, 3, 5$$

The smallest critical load occurs when $n = 1$, then

$$\sqrt{\frac{P_{cr}}{EI}}\,L = \frac{\pi}{2}$$

$$P_{cr} = \frac{\pi^2 EI}{4L^2} \qquad \textbf{Ans.}$$

Ans:
$P_{cr} = \dfrac{\pi^2 EI}{4L^2}$

***13–44.** Consider an ideal column as in Fig. 13–10*c*, having both ends fixed. Show that the critical load on the column is given by $P_{cr} = 4\pi^2 EI/L^2$. *Hint:* Due to the vertical deflection of the top of the column, a constant moment $\mathbf{M}'$ will be developed at the supports. Show that $d^2v/dx^2 + (P/EI)v = M'/EI$. The solution is of the form $v = C_1 \sin(\sqrt{P/EI}x) + C_2 \cos(\sqrt{P/EI}x) + M'/P$.

Moment Functions:

$M(x) = M' - Pv$

Differential Equation of The Elastic Curve:

$$EI\frac{d^2v}{dx^2} = M(x)$$

$$EI\frac{d^2v}{dx^2} = M' - Pv$$

$$\frac{d^2v}{dx^2} + \frac{P}{EI}v = \frac{M'}{EI} \qquad (Q.E.D.)$$

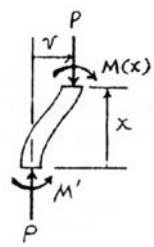

The solution of the above differential equation is of the form

$$v = C_1 \sin\left(\sqrt{\frac{P}{EI}}\,x\right) + C_2 \cos\left(\sqrt{\frac{P}{EI}}\,x\right) + \frac{M'}{P} \qquad [1]$$

and

$$\frac{dv}{dx} = C_1\sqrt{\frac{P}{EI}}\cos\left(\sqrt{\frac{P}{EI}}\,x\right) - C_2\sqrt{\frac{P}{EI}}\sin\left(\sqrt{\frac{P}{EI}}\,x\right) \qquad [2]$$

The integration constants can be determined from the boundary conditions.

Boundary Conditions:

At $x = 0, v = 0$. From Eq.[1], $C_2 = -\dfrac{M'}{P}$

At $x = 0, \dfrac{dv}{dx} = 0$. From Eq.[2], $C_1 = 0$

Elastic Curve:

$$v = \frac{M'}{P}\left[1 - \cos\left(\sqrt{\frac{P}{EI}}\,x\right)\right]$$

and

$$\frac{dv}{dx} = \frac{M'}{P}\sqrt{\frac{P}{EI}}\sin\left(\sqrt{\frac{P}{EI}}\,x\right)$$

However, due to symmetry $\dfrac{dv}{dx} = 0$ at $x = \dfrac{L}{2}$. Then,

$$\sin\left[\sqrt{\frac{P}{EI}}\left(\frac{L}{2}\right)\right] = 0 \qquad \text{or} \qquad \sqrt{\frac{P}{EI}}\left(\frac{L}{2}\right) = n\pi \qquad \text{where } n = 1, 2, 3, \ldots$$

The smallest critical load occurs when $n = 1$.

$$P_{cr} = \frac{4\pi^2 EI}{L^2} \qquad (Q.E.D.)$$

13–45. Consider an ideal column as in Fig. 13–10*d*, having one end fixed and the other pinned. Show that the critical load on the column is given by $P_{cr} = 20.19EI/L^2$. *Hint*: Due to the vertical deflection at the top of the column, a constant moment $\mathbf{M}'$ will be developed at the fixed support and horizontal reactive forces $\mathbf{R}'$ will be developed at both supports. Show that $d^2v/dx^2 + (P/EI)v = (R'/EI)(L - x)$. The solution is of the form $v = C_1 \sin(\sqrt{P/EI}x) + C_2 \cos(\sqrt{P/EI}x) + (R'/P)(L - x)$. After application of the boundary conditions show that $\tan(\sqrt{P/EI}L) = \sqrt{P/EI}L$. Solve by trial and error for the smallest nonzero root.

Equilibrium. FBD(a).

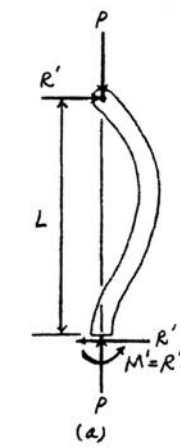

Moment Functions: FBD(b).

$M(x) = R'(L - x) - Pv$

Differential Equation of The Elastic Curve:

$$EI\frac{d^2v}{dx^2} = M(x)$$

$$EI\frac{d^2v}{dx^2} = R'(L - x) - Pv$$

$$\frac{d^2v}{dx^2} + \frac{P}{EI}v = \frac{R'}{EI}(L - x) \qquad (Q.E.D.)$$

The solution of the above differential equation is of the form

$$v = C_1 \sin\left(\sqrt{\frac{P}{EI}}x\right) + C_2 \cos\left(\sqrt{\frac{P}{EI}}x\right) + \frac{R'}{P}(L - x) \qquad [1]$$

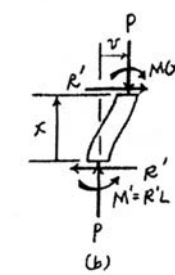

and

$$\frac{dv}{dx} = C_1\sqrt{\frac{P}{EI}}\cos\left(\sqrt{\frac{P}{EI}}x\right) - C_2\sqrt{\frac{P}{EI}}\sin\left(\sqrt{\frac{P}{EI}}x\right) - \frac{R'}{P} \qquad [2]$$

The integration constants can be determined from the boundary conditions.

Boundary Conditions:

At $x = 0, v = 0$. From Eq.[1], $C_2 = -\dfrac{R'L}{P}$

At $x = 0, \dfrac{dv}{dx} = 0$. From Eq.[2], $C_1 = \dfrac{R'}{P}\sqrt{\dfrac{EI}{P}}$

Elastic Curve:

$$v = \frac{R'}{P}\sqrt{\frac{EI}{P}}\sin\left(\sqrt{\frac{P}{EI}}x\right) - \frac{R'L}{P}\cos\left(\sqrt{\frac{P}{EI}}x\right) + \frac{R'}{P}(L - x)$$

$$= \frac{R'}{P}\left[\sqrt{\frac{EI}{P}}\sin\left(\sqrt{\frac{P}{EI}}x\right) - L\cos\left(\sqrt{\frac{P}{EI}}x\right) + (L - x)\right]$$

13–45. Continued

However, $v = 0$ at $x = L$. Then,

$$0 = \sqrt{\frac{EI}{P}}\sin\left(\sqrt{\frac{P}{EI}}L\right) - L\cos\left(\sqrt{\frac{P}{EI}}L\right)$$

$$\tan\left(\sqrt{\frac{P}{EI}}L\right) = \sqrt{\frac{P}{EI}}L \qquad (Q.E.D.)$$

By trial and error and choosing the smallest root, we have

$$\sqrt{\frac{P}{EI}}L = 4.49341$$

Then,

$$P_{cr} = \frac{20.19EI}{L^2} \qquad (Q.E.D.)$$

13–46. The wood column has a square cross section with dimensions 100 mm by 100 mm. It is fixed at its base and free at its top. Determine the load P that can be applied to the edge of the column without causing the column to fail either by buckling or by yielding. $E_w = 12$ GPa, $\sigma_Y = 55$ MPa.

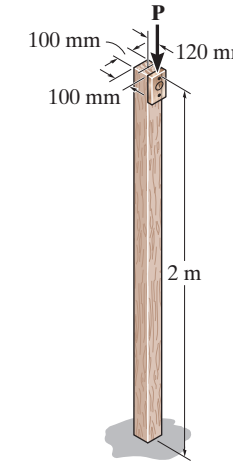

Section properties:

$$A = 0.1(0.1) = 0.01 \text{ m}^2 \qquad I = \frac{1}{12}(0.1)(0.1)^3 = 8.333(10^{-6}) \text{ m}^4$$

$$r = \sqrt{\frac{I}{A}} = \sqrt{\frac{8.333(10^{-6})}{0.01}} = 0.02887 \text{ m}$$

Buckling:

$$P_{cr} = \frac{\pi^2 EI}{(KL)^2} = \frac{\pi^2(12)(10^9)(8.333)(10^{-6})}{[2.0(2)]^2} = 61.7 \text{ kN}$$

Check: $\sigma_{cr} = \dfrac{P_{cr}}{A} = \dfrac{61.7(10^3)}{0.01} = 6.17 \text{ MPa} < \sigma_Y$ OK

Yielding:

$$\sigma_{max} = \frac{P}{A}\left[1 + \frac{ec}{r^2}\sec\left(\frac{KL}{2r}\sqrt{\frac{P}{EA}}\right)\right]$$

$$\frac{ec}{r^2} = \frac{0.12(0.05)}{(0.02887)^2} = 7.20$$

$$\frac{KL}{2r}\sqrt{\frac{P}{EA}} = \frac{2.0(2)}{2(0.02887)}\sqrt{\frac{P}{12(10^9)(0.01)}} = 0.006324\sqrt{P}$$

$$55(10^6)(0.01) = P[1 + 7.20 \sec(0.006324\sqrt{P})]$$

By trial and error:

$P = 31400 \text{ N} = 31.4 \text{ kN}$ controls **Ans.**

Ans:
$P = 31.4$ kN

13–47. The hollow red brass C83400 copper alloy shaft is fixed at one end but free at the other end. Determine the maximum eccentric force P the shaft can support without causing it to buckle or yield. Also, find the corresponding maximum deflection of the shaft.

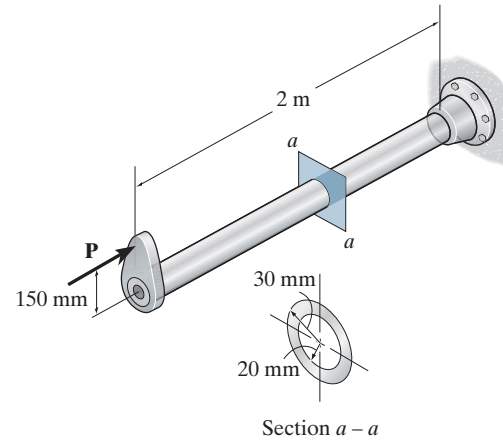

Section Properties.

$$A = \pi\left(0.03^2 - 0.02^2\right) = 0.5\left(10^{-3}\right)\pi\,\text{m}^2$$

$$I = \frac{\pi}{4}\left(0.03^4 - 0.02^4\right) = 0.1625\left(10^{-6}\right)\pi\ \text{m}^4$$

$$r = \sqrt{\frac{I}{A}} = \sqrt{\frac{0.1625\left(10^{-6}\right)\pi}{0.5\left(10^{-3}\right)\pi}} = 0.01803\ \text{m}$$

$e = 0.15$ m $\qquad\qquad$ $c = 0.03$ m

For a column that is fixed at one end and free at the other, $K = 2$. Thus,

$$KL = 2(2) = 4\ \text{m}$$

Yielding. In this case, yielding will occur before buckling. Applying the secant formula,

$$\sigma_{\max} = \frac{P}{A}\left[1 + \frac{ec}{r_x{}^2}\sec\left(\frac{KL}{2r_x}\sqrt{\frac{P}{EA}}\right)\right]$$

$$70.0\left(10^6\right) = \frac{P}{0.5\left(10^{-3}\right)\pi}\left[1 + \frac{0.15(0.03)}{0.01803^2}\sec\left[\frac{4}{2(0.01803)}\sqrt{\frac{P}{101\left(10^9\right)\left[0.5\left(10^{-3}\right)\pi\right]}}\right]\right]$$

$$70.0\left(10^6\right) = \frac{P}{0.5\left(10^{-3}\right)\pi}\left(1 + 13.846\sec 8.8078\left(10^{-3}\right)\sqrt{P}\right)$$

Solving by trial and error,

$$P = 5.8697\ \text{kN} = 5.87\ \text{kN} \qquad \textbf{Ans.}$$

Maximum Deflection.

$$v_{\max} = e\left[\sec\left(\sqrt{\frac{P}{EI}}\frac{KL}{2}\right) - 1\right]$$

$$= 0.15\left[\sec\left[\sqrt{\frac{5.8697\left(10^3\right)}{101\left(10^9\right)\left[0.1625\left(10^{-6}\right)\pi\right]}}\left(\frac{4}{2}\right)\right] - 1\right]$$

$$= 0.04210\ \text{m} = 42.1\ \text{mm} \qquad \textbf{Ans.}$$

Ans:
$P = 5.87$ kN, $v_{\max} = 42.1$ mm

***13–48.** The hollow red brass C83400 copper alloy shaft is fixed at one end but free at the other end. If the eccentric force $P = 5$ kN is applied to the shaft as shown, determine the maximum normal stress and the maximum deflection.

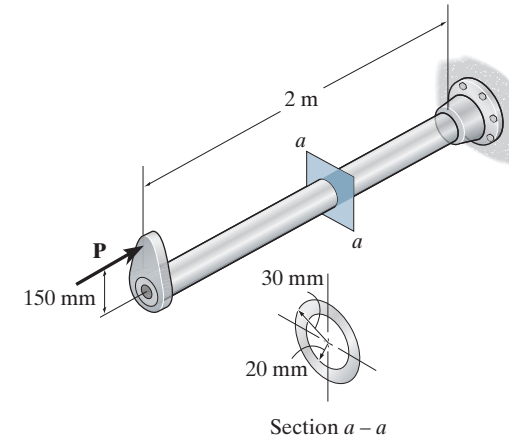

Section Properties.

$$A = \pi\left(0.03^2 - 0.02^2\right) = 0.5\left(10^{-3}\right)\pi\,\text{m}^2$$

$$I = \frac{\pi}{4}\left(0.03^4 - 0.02^4\right) = 0.1625\left(10^{-6}\right)\pi\ \text{m}^4$$

$$r = \sqrt{\frac{I}{A}} = \sqrt{\frac{0.1625\left(10^{-6}\right)\pi}{0.5\left(10^{-3}\right)\pi}} = 0.01803\ \text{m}$$

$e = 0.15$ m $\qquad\qquad c = 0.03$ m

For a column that is fixed at one end and free at the other, $K = 2$. Thus,

$KL = 2(2) = 4$ m

Yielding. Applying the secant formula,

$$\sigma_{\max} = \frac{P}{A}\left[1 + \frac{ec}{r^2}\sec\left(\frac{KL}{2r}\sqrt{\frac{P}{EA}}\right)\right]$$

$$= \frac{5\left(10^3\right)}{0.5\left(10^{-3}\right)\pi}\left[1 + \frac{0.15(0.03)}{0.01803^2}\sec\left[\frac{4}{2(0.01803)}\sqrt{\frac{5\left(10^3\right)}{101\left(10^9\right)\left[0.5\left(10^{-3}\right)\pi\right]}}\right]\right]$$

$$= 57.44\ \text{MPa} = 57.4\ \text{MPa} \qquad \textbf{Ans.}$$

Since $\sigma_{\max} < \sigma_Y = 70$ MPa, the shaft does not yield.

Maximum Deflection.

$$v_{\max} = e\left[\sec\left(\sqrt{\frac{P}{EI}}\frac{KL}{2}\right) - 1\right]$$

$$= 0.15\left[\sec\left[\sqrt{\frac{5\left(10^3\right)}{101\left(10^9\right)\left[0.1625\left(10^{-6}\right)\pi\right]}}\left(\frac{4}{2}\right)\right] - 1\right]$$

$$= 0.03467\ \text{m} = 34.7\ \text{mm} \qquad \textbf{Ans.}$$

13–49. The tube is made of copper and has an outer diameter of 35 mm and a wall thickness of 7 mm. Determine the eccentric load P that it can support without failure. The tube is pin supported at its ends. $E_{cu} = 120$ GPa, $\sigma_Y = 750$ MPa.

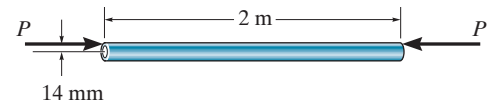

Section Properties:

$$A = \frac{\pi}{4}(0.035^2 - 0.021^2) = 0.61575(10^{-3})\ \text{m}^2$$

$$I = \frac{\pi}{4}(0.0175^4 - 0.0105^4) = 64.1152(10^{-9})\ \text{m}^4$$

$$r = \sqrt{\frac{I}{A}} = \sqrt{\frac{64.1152(10^{-9})}{0.61575(10^{-3})}} = 0.010204\ \text{m}$$

For a column pinned at both ends, $K = 1$. Then $KL = 1(2) = 2$ m.

Buckling: Applying *Euler's* formula,

$$P_{max} = P_{cr} = \frac{\pi^2 EI}{(KL)^2} = \frac{\pi^2(120)(10^9)\left[64.1152(10^{-9})\right]}{2^2} = 18983.7\ \text{N} = 18.98\ \text{kN}$$

Critical Stress: *Euler's* formula is only valid if $\sigma_{cr} < \sigma_\gamma$.

$$\sigma_{cr} = \frac{P_{cr}}{A} = \frac{18983.7}{0.61575(10^{-3})} = 30.83\ \text{MPa} < \sigma_\gamma = 750\ \text{MPa} \qquad \text{O.K.}$$

Yielding: Applying the secant formula,

$$\sigma_{max} = \frac{P_{max}}{A}\left[1 + \frac{ec}{r^2}\sec\left(\frac{(KL)}{2r}\sqrt{\frac{P_{max}}{EA}}\right)\right]$$

$$750\left(10^6\right) = \frac{P_{max}}{0.61575(10^{-3})}\left[1 + \frac{0.014(0.0175)}{0.010204^2}\sec\left(\frac{2}{2(0.010204)}\sqrt{\frac{P_{max}}{120(10^9)[0.61575(10^{-3})]}}\right)\right]$$

$$750\left(10^6\right) = \frac{P_{max}}{0.61575(10^{-3})}\left(1 + 2.35294\sec 0.0114006\sqrt{P_{max}}\right)$$

Solving by trial and error,

$$P_{max} = 16\,884\ \text{N} = 16.9\ \text{kN} \quad (\textit{Controls!}) \qquad \textbf{Ans.}$$

Ans:
$P_{max} = 16.9$ kN

13–50. Solve Prob. 13–49 if instead the left end is free and the right end is fixed-supported.

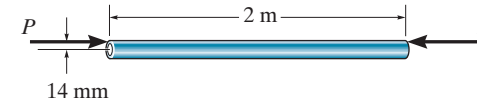

Section Properties:

$$A = \frac{\pi}{4}\left(0.035^2 - 0.021^2\right) = 0.61575\left(10^{-3}\right)\ \text{m}^2$$

$$I = \frac{\pi}{4}\left(0.0175^4 - 0.0105^4\right) = 64.1152\left(10^{-9}\right)\ \text{m}^4$$

$$r = \sqrt{\frac{I}{A}} = \sqrt{\frac{64.1152(10^{-9})}{0.61575(10^{-3})}} = 0.010204\ \text{ms}$$

For a column fixed at one end and free at the other, $K = 2$. Then $KL = 2(2) = 4$ m.

Buckling: Applying *Euler's* formula,

$$P_{\max} = P_{\text{cr}} = \frac{\pi^2 EI}{(KL)^2} = \frac{\pi^2(120)(10^9)\left[64.1152(10^{-9})\right]}{4^2} = 4746\ \text{N} = 4.75\ \text{kN}$$

Critical Stress: *Euler's* formula is only valid if $\sigma_{\text{cr}} < \sigma_\gamma$.

$$\sigma_{\text{cr}} = \frac{P_{\text{cr}}}{A} = \frac{4746}{0.61575(10^{-3})} = 7.71\ \text{MPa} < \sigma_\gamma = 750\ \text{MPa} \qquad \text{O. K.}$$

Yielding: Applying the secant formula,

$$\sigma_{\max} = \frac{P_{\max}}{A}\left[1 + \frac{ec}{r^2}\sec\left(\frac{(KL)}{2r}\sqrt{\frac{P_{\max}}{EA}}\right)\right]$$

$$750\left(10^6\right) = \frac{P_{\max}}{0.61575(10^{-3})}\left[1 + \frac{0.014(0.0175)}{0.010204^2}\sec\left(\frac{4}{2(0.010204)}\sqrt{\frac{P_{\max}}{120(10^9)[0.61575(10^{-3})]}}\right)\right]$$

$$750\left(10^6\right) = \frac{P_{\max}}{0.61575(10^{-3})}\left(1 + 2.35294\sec 22.801\left(10^{-3}\right)\sqrt{P}\right)$$

Solving by trial and error,

$$P_{\max} = 4604\ \text{N} = 4.60\ \text{kN} \quad (\textit{Controls!}) \qquad \textbf{Ans.}$$

Ans:
$P_{\max} = 4.60$ kN

13–51. Assume that the wood column is pin connected at its base and top. Determine the maximum eccentric load P that can be applied without causing the column to buckle or yield. $E_w = 1.8(10^3)$ ksi, $\sigma_Y = 8$ ksi.

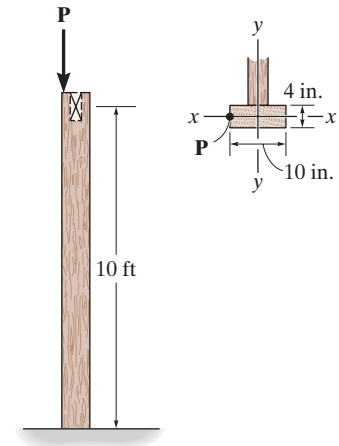

Section Properties:

$$A = 10(4) = 40 \text{ in}^2 \qquad I_y = \frac{1}{12}(4)(10^3) = 333.33 \text{ in}^4 \qquad I_x = \frac{1}{12}(10)(4^3) = 53.33 \text{ in}^4$$

$$r_y = \sqrt{\frac{I_x}{A}} = \sqrt{\frac{333.33}{40}} = 2.8868 \text{ in.}$$

Buckling about $y-y$ axis:

$$P = P_{cr} = \frac{\pi^2 EI}{(KL)^2} = \frac{\pi^2(1.8)(10^3)(333.33)}{[(2)(10)(12)]^2} = 102.8 \text{ kip}$$

Buckling about $x-x$ axis:

$$P = P_{cr} = \frac{\pi^2 EI}{(KL)^2} = \frac{\pi^2(1.8)(10^3)(53.33)}{[(1)(10)(12)]^2} = 65.8 \text{ kip (controls)} \qquad \textbf{Ans.}$$

$$\text{Check: } \sigma_{cr} = \frac{P_{cr}}{A} = \frac{65.8}{40} = 1.64 \text{ ksi} < \sigma_Y \qquad \text{O.K.}$$

Yielding about $y-y$ axis:

$$\sigma_{max} = \frac{P}{A}\left(1 + \frac{ec}{r^2}\sec\left(\frac{KL}{2r}\right)\sqrt{\frac{P}{EA}}\right)$$

$$\frac{ec}{r^2} = \frac{5(5)}{2.8868^2} = 3.0$$

$$\left(\frac{KL}{2r}\right)\sqrt{\frac{P}{EA}} = \frac{(1)(10)(12)}{2(2.8868)}\sqrt{\frac{P}{1.8(10^3)(40)}} = 0.077460\sqrt{P}$$

$$8(40) = P[1 + 3.0 \sec(0.077460\sqrt{P})]$$

By trial and error:

$$P = 67.6 \text{ kip}$$

Ans:
$\sigma_{max} = 65.8$ kip

***13–52.** Assume that the wood column is pinned top and bottom for movement about the $x-x$ axis, and fixed at the bottom and free at the top for movement about the $y-y$ axis. Determine the maximum eccentric load P that can be applied without causing the column to buckle or yield. $E_w = 1.8(10^3)$ ksi, $\sigma_Y = 8$ ksi.

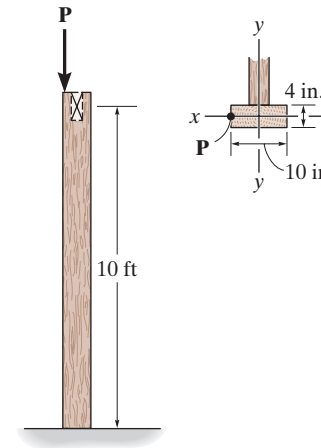

Section Properties:

$$A = 10(4) = 40 \text{ in}^2 \qquad I_y = \frac{1}{12}(4)(10^3) = 333.33 \text{ in}^4 \qquad I_x = \frac{1}{12}(10)(4^3) = 53.33 \text{ in}^4$$

$$r_y = \sqrt{\frac{I_y}{A}} = \sqrt{\frac{333.33}{40}} = 2.8868 \text{ in.}$$

Buckling about $x-x$ axis:

$$P = P_{cr} = \frac{\pi^2 EI}{(KL)^2} = \frac{\pi^2(1.8)(10^3)(53.33)}{[(1)(10)(12)]^2} = 65.8 \text{ kip}$$

Check: $\sigma_{cr} = \dfrac{P_{cr}}{A} = \dfrac{65.8}{40} = 1.64 \text{ ksi} < \sigma_Y$ O.K.

Yielding about $y-y$ axis:

$$\sigma_{max} = \frac{P}{A}\left(1 + \frac{ec}{r^2}\sec\left(\frac{KL}{2r}\sqrt{\frac{P}{EA}}\right)\right)$$

$$\frac{ec}{r^2} = \frac{5(5)}{2.8868^2} = 3.0$$

$$\left(\frac{KL}{2r}\right)\sqrt{\frac{P}{EA}} = \frac{(2)(10)(12)}{2(2.8868)}\sqrt{\frac{P}{1.8(10^3)(40)}} = 0.15492\sqrt{P}$$

$$8(40) = P[1 + 3.0 \sec(0.15492\sqrt{P})]$$

By trial and error:

$P = 45.7$ kip (controls) **Ans.**

13–53. A W12 × 26 structural A992 steel column is pin connected at its ends and has a length $L = 11.5$ ft. Determine the maximum eccentric load P that can be applied so the column does not buckle or yield. Compare this value with an axial critical load P' applied through the centroid of the column.

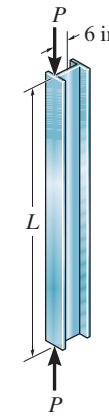

Section properties for *W*12 × 26:

$A = 7.65 \text{ in}^2$ $\quad I_x = 204 \text{ in}^4$ $\quad I_y = 17.3 \text{ in}^4$

$r_x = 5.17$ in. $\quad d = 12.22$ in.

Buckling about *y*−*y* axis:

$$P_{cr} = \frac{\pi^2 EI}{(KL)^2}$$

$$P_{cr} = P_{cr} = \frac{\pi^2(29)(10^3)(17.3)}{[1(11.5)(12)]^2} = 260 \text{ kip}$$

$$\text{Check: } \sigma_{cr} = \frac{P_{cr}}{A} = \frac{260}{7.65} = 34.0 \text{ ksi} < \sigma_Y \qquad \text{OK}$$

Yielding about *x*−*x* axis:

$$\sigma_{max} = \frac{P}{A}\left[1 + \frac{ec}{r^2}\sec\left(\frac{KL}{2r}\sqrt{\frac{P}{EA}}\right)\right]$$

$$\frac{ec}{r^2} = \frac{6\left(\frac{12.22}{2}\right)}{5.17^2} = 1.37155$$

$$\frac{KL}{2r}\sqrt{\frac{P}{EA}} = \frac{1(11.5)(12)}{2(5.17)}\sqrt{\frac{P}{29(10^3)(7.65)}} = 0.028335\sqrt{P}$$

$$50(7.65) = P[1 + 1.37155 \sec(0.028335\sqrt{P})]$$

By trial and error:

$P = 155.78 = 156$ kip $\quad$ controls **Ans.**

Ans:
$P = 156$ kip

13–54. A W14 × 30 structural A-36 steel column is pin connected at its ends and has a length $L = 10$ ft. Determine the maximum eccentric load P that can be applied so the column does not buckle or yield. Compare this value with an axial critical load P' applied through the centroid of the column.

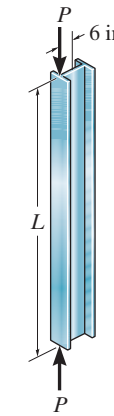

Section properties for W 14 × 30

$A = 8.85 \text{ in}^2 \qquad d = 13.84 \text{ in.} \qquad I_x = 291 \text{ in}^4 \qquad r_x = 5.73 \text{ in.} \qquad I_y = 19.6 \text{ in}^4$

Buckling about $y-y$ axis:

$$P_{cr} = \frac{\pi^2 EI}{(KL)^2} \qquad\qquad K = 1$$

$$P' = \frac{\pi^2(29)(10^3)(19.6)}{[1(10)(12)]^2} = 390 \text{ kip}$$ **Ans.**

Yielding about $x-x$ axis:

$$\sigma_{max} = \frac{P}{A}\left[1 + \frac{ec}{r^2}\sec\left(\frac{KL}{2r}\sqrt{\frac{P}{EA}}\right)\right]$$

$$36 = \frac{P}{8.85}\left[1 + \frac{6\left(\frac{13.84}{2}\right)}{5.73^2}\sec\left(\frac{1(10)(12)}{2(5.73)}\sqrt{\frac{P}{29(10^3)(8.85)}}\right)\right]$$

Solving by trial and error:

$P = 139$ kip controls **Ans.**

Ans:
$P' = 390$ kip, $P = 139$ kip

13–55. The wood column is pinned at its base and top. If the eccentric force $P = 10$ kN is applied to the column, investigate whether the column is adequate to support this loading without buckling or yielding. Take $E = 10$ GPa and $\sigma_Y = 15$ MPa.

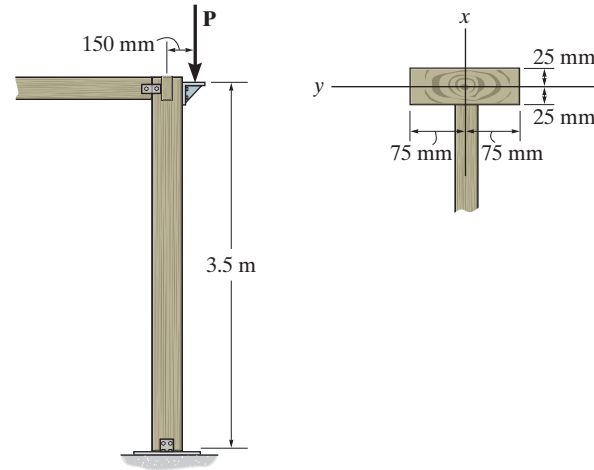

Section Properties.

$$A = 0.05(0.15) = 7.5\left(10^{-3}\right)\text{m}^2$$

$$I_x = \frac{1}{12}(0.05)\left(0.15^3\right) = 14.0625\left(10^{-6}\right)\text{m}^4$$

$$r_x = \sqrt{\frac{I_x}{A}} = \sqrt{\frac{14.0625\left(10^{-6}\right)}{7.5\left(10^{-3}\right)}} = 0.04330 \text{ m}$$

$$I_y = \frac{1}{12}(0.15)\left(0.05^3\right) = 1.5625\left(10^{-6}\right)\text{m}^4$$

$e = 0.15$ m $\qquad\qquad c = 0.075$ m

For a column that is pinned at both ends, $K = 1$. Then,

$$(KL)_x = (KL)_y = 1(3.5) = 3.5 \text{ m}$$

Buckling About the Weak Axis. Applying Euler's formula,

$$P_{cr} = \frac{\pi^2 E I_y}{(KL)_y{}^2} = \frac{\pi^2\left[10\left(10^9\right)\right]\left[1.5625\left(10^{-6}\right)\right]}{3.5^2} = 12.59 \text{ kN}$$

Euler's formula is valid if $\sigma_{cr} < \sigma_Y$.

$$\sigma_{cr} = \frac{P_{cr}}{A} = \frac{12.59\left(10^3\right)}{7.5\left(10^{-3}\right)} = 1.68 \text{ MPa} < \sigma_Y = 15 \text{ MPa} \qquad \text{O.K.}$$

Since $P_{cr} > P = 10$ kN, the column *will not buckle*.

Yielding About Strong Axis. Applying the secant formula.

$$\sigma_{max} = \frac{P}{A}\left[1 + \frac{ec}{r_x{}^2}\sec\left[\frac{(KL)_x}{2r_x}\sqrt{\frac{P}{EA}}\right]\right]$$

$$= \frac{10\left(10^3\right)}{7.5\left(10^{-3}\right)}\left[1 + \frac{0.15(0.075)}{0.04330^2}\sec\left[\frac{3.5}{2(0.04330)}\sqrt{\frac{10\left(10^3\right)}{10\left(10^9\right)\left[7.5\left(10^{-3}\right)\right]}}\right]\right]$$

$$= 10.29 \text{ MPa}$$

Since $\sigma_{max} < \sigma_Y = 15$ MPa, the column *will not yield*. **Ans.**

Ans:
Yes.

***13–56.** The wood column is pinned at its base and top. Determine the maximum eccentric force P the column can support without causing it to either buckle or yield. Take $E = 10$ GPa and $\sigma_Y = 15$ MPa.

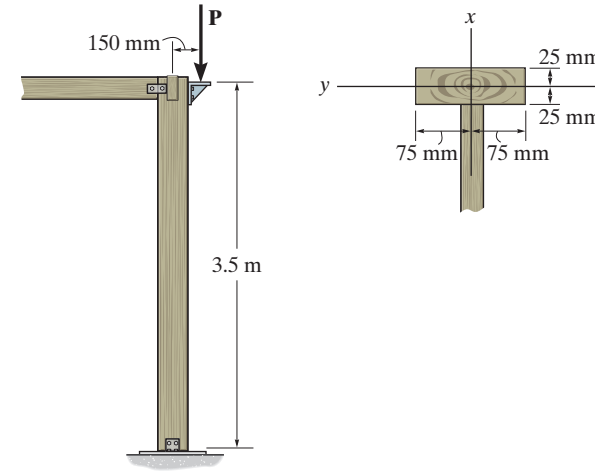

Section Properties.

$$A = 0.05(0.15) = 7.5\left(10^{-3}\right)\text{m}^2$$

$$I_x = \frac{1}{12}(0.05)\left(0.15^3\right) = 14.0625\left(10^{-6}\right)\text{m}^4$$

$$r_x = \sqrt{\frac{I_x}{A}} = \sqrt{\frac{14.0625\left(10^{-6}\right)}{7.5\left(10^{-3}\right)}} = 0.04330\,\text{m}$$

$$I_y = \frac{1}{12}(0.15)\left(0.05^3\right) = 1.5625\left(10^{-6}\right)\text{m}^4$$

$e = 0.15$ m $\qquad\qquad c = 0.075$ m

For a column that is pinned at both ends, $K = 1$. Then,

$$(KL)_x = (KL)_y = 1(3.5) = 3.5\text{ m}$$

Buckling About the Weak Axis. Applying Euler's formula,

$$P_{\text{cr}} = \frac{\pi^2 E I_y}{(KL)_y{}^2} = \frac{\pi^2\left[10\left(10^9\right)\right]\left[1.5625\left(10^{-6}\right)\right]}{3.5^2} = 12.59\text{ kN} = 12.6\text{ kN} \qquad \textbf{Ans.}$$

Euler's formula is valid if $\sigma_{\text{cr}} < \sigma_Y$.

$$\sigma_{\text{cr}} = \frac{P_{\text{cr}}}{A} = \frac{12.59\left(10^3\right)}{7.5\left(10^{-3}\right)} = 1.68\text{ MPa} < \sigma_Y = 15\text{ MPa} \qquad \text{O.K.}$$

Yielding About Strong Axis. Applying the secant formula with $P = P_{\text{cr}} = 12.59$ kN,

$$\sigma_{\max} = \frac{P}{A}\left[\left[1 + \frac{ec}{r_x{}^2}\sec\left[\frac{(KL)_x}{2r_x}\sqrt{\frac{P}{EA}}\right]\right]\right]$$

$$= \frac{12.59\left(10^3\right)}{7.5\left(10^{-3}\right)}\left[1 + \frac{0.15(0.075)}{0.04330^2}\sec\left[\frac{3.5}{2(0.04330)}\sqrt{\frac{12.59\left(10^3\right))}{10\left(10^9\right)\left[7.5\left(10^{-3}\right)\right]}}\right]\right]$$

$$= 13.31\text{ MPa} < \sigma_Y = 15\text{ MPa} \qquad \text{O.K.}$$

13–57. The 6061-T6 aluminum alloy solid shaft is fixed at one end but free at the other end. If the shaft has a diameter of 100 mm, determine its maximum allowable length L if it is subjected to the eccentric force $P = 80$ kN.

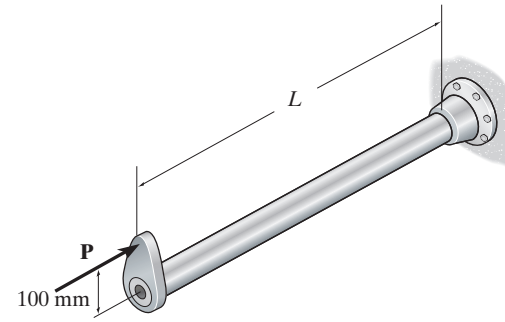

Section Properties.

$$A = \pi(0.05^2) = 2.5(10^{-3})\pi \text{ m}^2$$

$$I = \frac{\pi}{4}(0.05^4) = 1.5625(10^{-6})\pi \text{ m}^4$$

$$r = \sqrt{\frac{I}{A}} = \sqrt{\frac{1.5625(10^{-6})\pi}{2.5(10^{-3})\pi}} = 0.025 \text{ m}$$

$$e = 0.1 \text{ m} \qquad c = 0.05 \text{ m}$$

For a column that is fixed at one end and free at the other, $K = 2$. Thus,

$$KL = 2L$$

Buckling. The critical buckling load is $P_{cr} = 80$ kN. Applying Euler's equation,

$$P_{cr} = \frac{\pi^2 EI}{(KL)^2}$$

$$80(10^3) = \frac{\pi^2[68.9(10^9)][1.5625(10^{-6})\pi]}{(2L)^2}$$

$$L = 3.230 \text{ m}$$

Euler's equation is valid only if $\sigma_{cr} < \sigma_Y$.

$$\sigma_{cr} = \frac{P_{cr}}{A} = \frac{80(10^3)}{2.5(10^{-3})\pi} = 10.19 \text{ MPa} < \sigma_Y = 255 \text{ MPa} \qquad \text{(O.K.)}$$

Yielding. Applying the secant formula,

$$\sigma_{max} = \frac{P}{A}\left[1 + \frac{ec}{r^2}\sec\left[\frac{KL}{2r}\sqrt{\frac{P}{EA}}\right]\right]$$

$$255(10^6) = \frac{80(10^3)}{2.5(10^{-3})\pi}\left[1 + \frac{0.1(0.05)}{0.025^2}\sec\left[\frac{2L}{2(0.025)}\sqrt{\frac{80(10^3)}{68.9(10^9)[2.5(10^{-3})\pi]}}\right]\right]$$

$$\sec 0.4864L = 3.0043$$

$$L = 2.532 \text{ m} = 2.53 \text{ m (controls)}$$ **Ans.**

Ans:
$L = 2.53$ m

13–58. The 6061-T6 aluminum alloy solid shaft is fixed at one end but free at the other end. If the length is $L = 3$ m, determine its minimum required diameter if it is subjected to the eccentric force $P = 60$ kN.

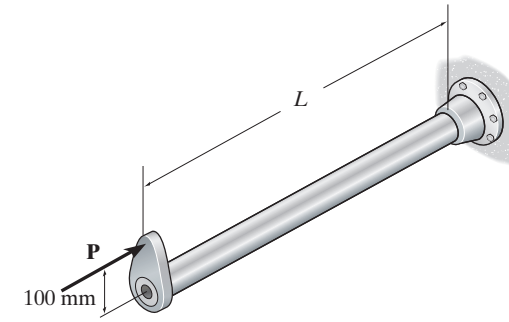

Section Properties.

$$A = \frac{\pi}{4}d^2 \qquad I = \frac{\pi}{4}\left(\frac{d}{2}\right)^4 = \frac{\pi}{64}d^4$$

$$r = \sqrt{\frac{I}{A}} = \sqrt{\frac{\frac{\pi}{64}d^4}{\frac{\pi}{4}d^2}} = \frac{d}{4}$$

$$e = 0.1 \text{ m} \qquad c = \frac{d}{2}$$

For a column that is fixed at one end and free at the other, $K = 2$. Thus,

$$KL = 2(3) = 6 \text{ m}$$

Buckling. The critical buckling load is $P_{cr} = 60$ kN. Applying Euler's equation,

$$P_{cr} = \frac{\pi^2 EI}{(KL)^2}$$

$$60(10^3) = \frac{\pi^2\left[68.9(10^9)\right]\left(\frac{\pi}{64}d^4\right)}{6^2}$$

$$d = 0.08969 \text{ m} = 89.7 \text{ mm}$$

Yielding. Applying the secant formula,

$$\sigma_{max} = \frac{P}{A}\left[1 + \frac{ec}{r^2}\sec\left[\frac{KL}{2r}\sqrt{\frac{P}{EA}}\right]\right]$$

$$255(10^6) = \frac{60(10^3)}{\frac{\pi}{4}d^2}\left[1 + \frac{0.1\left(\frac{d}{2}\right)}{\left(\frac{d}{4}\right)^2}\sec\left[\frac{6}{2\left(\frac{d}{4}\right)}\sqrt{\frac{60(10^3)}{68.9(10^9)\left(\frac{\pi}{4}d^2\right)}}\right]\right]$$

$$255(10^6) = \frac{240(10^3)}{\pi d^2}\left[1 + \frac{0.8}{d}\sec\left(\frac{0.012636}{d^2}\right)\right]$$

Solving by trial and error,

$$d = 0.09831 \text{ m} = 98.3 \text{ mm (controls)} \qquad \textbf{Ans.}$$

Ans:
$d = 98.3$ mm

13–59. The wood column is pinned at its base and top. If $L = 7$ ft, determine the maximum eccentric load P that can be applied without causing the column to buckle or yield. $E_w = 1.8(10^3)$ ksi, $\sigma_Y = 8$ ksi.

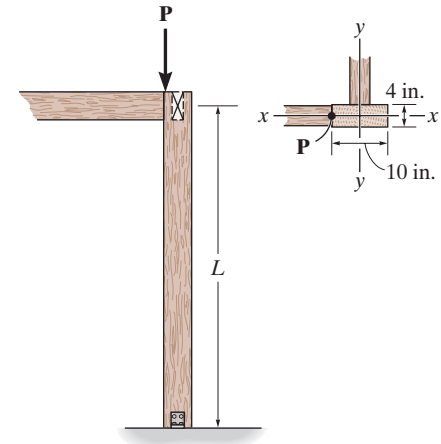

Section Properties:

$$A = 10(4) = 40 \text{ in}^2 \qquad I_y = \frac{1}{12}(4)(10^3) = 333.33 \text{ in}^4 \qquad I_x = \frac{1}{12}(10)(4^3) = 53.33 \text{ in}^4$$

$$r_y = \sqrt{\frac{I_y}{A}} = \sqrt{\frac{333.33}{40}} = 2.8868 \text{ in.}$$

Buckling about $x-x$ axis:

$$P = P_{cr} = \frac{\pi^2 EI}{(KL)^2} = \frac{\pi^2(1.8)(10^3)(53.33)}{[1(7)(12)]^2} = 134 \text{ kip}$$

Check: $\sigma_{cr} = \dfrac{P_{cr}}{A} = \dfrac{134}{40} = 3.36 \text{ ksi} < \sigma_Y$ OK

Yielding about y–y axis:

$$\sigma_{max} = \frac{P}{A}\left[1 + \frac{ec}{r^2}\sec\left(\frac{KL}{2r}\right)\sqrt{\frac{P}{EA}}\right]$$

$$\frac{ec}{r^2} = \frac{5(5)}{2.8868^2} = 3.0$$

$$\left(\frac{KL}{2r}\right)\sqrt{\frac{P}{EA}} = \frac{1(7)(12)}{2(2.8868)}\sqrt{\frac{P}{1.8(10^3)(40)}} = 0.054221\sqrt{P}$$

$$8(40) = P[1 + 3.0\sec(0.054221\sqrt{P})]$$

By trial and error:

$P = 73.5$ kip controls **Ans.**

Ans:
$P = 73.5$ kip

***13–60.** The wood column is pinned at its base and top. If $L = 5$ ft, determine the maximum eccentric load P that can be applied without causing the column to buckle or yield. $E_w = 1.8(10^3)$ ksi, $\sigma_Y = 8$ ksi.

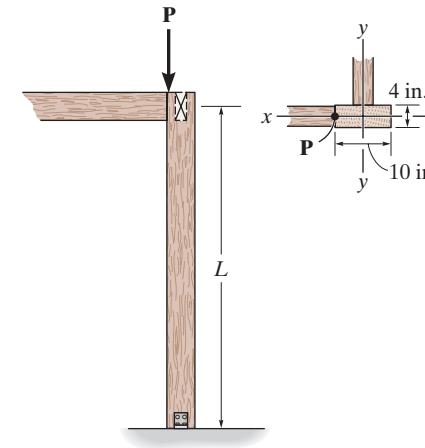

Section Properties:

$$A = 10(4) = 40 \text{ in}^2 \quad I_y = \frac{1}{12}(4)(10^3) = 333.33 \text{ in}^4 \quad I_x = \frac{1}{2}(10)(4^3) = 53.33 \text{ in}^4$$

$$r_y = \sqrt{\frac{I_y}{A}} = \sqrt{\frac{333.33}{40}} = 2.8868 \text{ in.}$$

Buckling about x–x axis:

$$P = P_{cr} = \frac{\pi^2 EI}{(KL)^2} = \frac{\pi^2(1.8)(10^3)(53.33)}{[1(5)(12)]^2} = 263 \text{ kip}$$

Check: $\sigma_{cr} = \dfrac{P_{cr}}{A} = \dfrac{263}{40} = 6.58 \text{ ksi} < \sigma_Y$ OK

Yielding about y–y axis:

$$\sigma_{max} = \frac{P}{A}\left[1 + \frac{ec}{r^2}\sec\left(\frac{KL}{2r}\sqrt{\frac{P}{EA}}\right)\right]$$

$$\frac{ec}{r^2} = \frac{5(5)}{2.8868^2} = 3.0$$

$$\left(\frac{KL}{2r}\right)\sqrt{\frac{P}{EA}} = \frac{1(5)(12)}{2(2.8868)}\sqrt{\frac{P}{1.8(10^3)(40)}} = 0.038729\sqrt{P}$$

$$8(40) = P[1 + 3.0\sec(0.038729\sqrt{P})]$$

By trial and error:

$P = 76.6$ kip (controls) **Ans.**

13–61. The A992 steel rectangular hollow section column is pinned at both ends. If it has a length of $L = 14$ ft, determine the maximum allowable eccentric force **P** it can support without causing it to either buckle or yield.

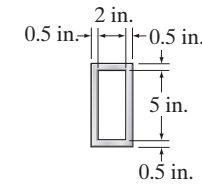

Section $a - a$

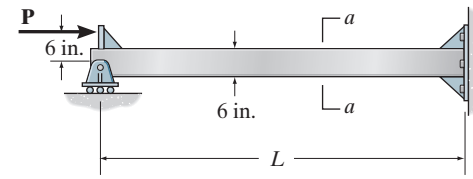

Section Properties.

$$A = 3(6) - 2(5) = 8 \text{ in}^2$$

$$I_x = \frac{1}{12}(3)(6^3) - \frac{1}{12}(2)(5^3) = 33.167 \text{ in}^4$$

$$r_x = \sqrt{\frac{I_x}{A}} = \sqrt{\frac{33.167}{8}} = 2.0361 \text{ in.}$$

$$I_y = \frac{1}{12}(6)(3^3) - \frac{1}{12}(5)(2^3) = 10.167 \text{ in}^4$$

For a column that is pinned at both ends, $K = 1$. Then,

$$(KL)_x = (KL)_y = 1(14)(12) = 168 \text{ in.}$$

Buckling About the Weak Axis. Applying Euler's formula,

$$P_{cr} = \frac{\pi^2 E I_y}{(KL)_y{}^2} = \frac{\pi^2[29(10^3)](10.167)}{168^2} = 103.10 \text{ kip}$$

Euler's formula is valid if $\sigma_{cr} < \sigma_Y$.

$$\sigma_{cr} = \frac{P_{cr}}{A} = \frac{103.10}{8} = 12.89 \text{ ksi} < \sigma_Y = 50 \text{ ksi} \qquad \textbf{(O.K.)}$$

Yielding About Strong Axis. Applying the secant formula,

$$\sigma_{max} = \frac{P_{max}}{A}\left[1 + \frac{ec}{r_x{}^2}\sec\left[\frac{(KL)_x}{2r_x}\sqrt{\frac{P_{max}}{EA}}\right]\right]$$

$$50 = \frac{P_{max}}{8}\left[1 + \frac{6(3)}{2.0361^2}\sec\left[\frac{168}{2(2.0361)}\sqrt{\frac{P_{max}}{29(10^3)(8)}}\right]\right]$$

$$P_{max} = 61.174 = 61.2 \text{ kip} \qquad \textbf{Ans.}$$

Ans:
$P_{max} = 61.2$ kip

13–62. The A992 steel rectangular hollow section column is pinned at both ends. If it is subjected to the eccentric force $P = 45$ kip, determine its maximum allowable length L without causing it to either buckle or yield.

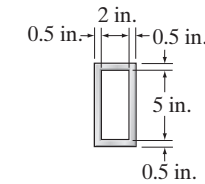

Section $a - a$

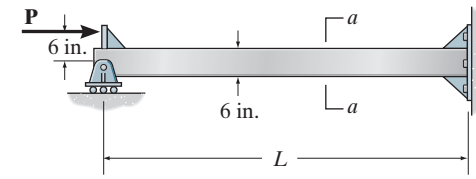

Section Properties.

$$A = 3(6) - 2(5) = 8 \text{ in}^2$$

$$I_x = \frac{1}{12}(3)(6^3) - \frac{1}{2}(2)(5^3) = 33.167 \text{ in}^4$$

$$r_x = \sqrt{\frac{I_x}{A}} = \sqrt{\frac{33.167}{8}} = 2.0361 \text{ in.}$$

$$I_y = \frac{1}{12}(6)(3^3) - \frac{1}{12}(5)(2^3) = 10.167 \text{ in}^4$$

For a column that is pinned at both ends, $K = 1$. Then,

$$(KL)_x = (KL)_y = 1L$$

Buckling About the Weak Axis. The critical load is

$$P_{cr} = 45 \text{ kip}$$

Applying Euler's formula,

$$P_{cr} = \frac{\pi^2 E I_y}{(KL)_y^2}$$

$$45 = \frac{\pi^2[29(10^3)](10.167)}{L^2}$$

$$L = 254.3 \text{ in.} = 21.2 \text{ ft} \qquad \text{(controls)}$$ **Ans.**

Euler's formula is valid if $\sigma_{cr} < \sigma_Y$.

$$\sigma_{cr} = \frac{P_{cr}}{A} = \frac{45}{8} = 5.625 \text{ ksi} < \sigma_Y = 50 \text{ ksi} \qquad \textbf{(O. K.)}$$

Yielding About Strong Axis. Applying the secant formula,

$$\sigma_{max} = \frac{P}{A}\left[1 + \frac{ec}{r_x^2}\sec\left[\frac{(KL)_x}{2r_x}\sqrt{\frac{P}{EA}}\right]\right]$$

$$50 = \frac{45}{8}\left[1 + \frac{6(3)}{2.0361^2}\sec\left[\frac{L}{2(2.0361)}\sqrt{\frac{45}{29(10^3)(8)}}\right]\right]$$

$$\sec[3.420(10^{-3})L] = 1.817$$

$$L = 288.89 \text{ in.} = 24.07 \text{ ft}$$

Ans:
$L = 21.2$ ft

13–63. The W10 × 30 structural A992 steel column is pinned at its top and bottom. Determine the maximum load P it can support.

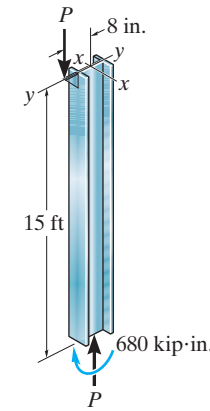

Section properties for W 10 × 30:

$A = 8.84 \text{ in}^2 \qquad I_x = 170 \text{ in}^4 \qquad r_x = 4.38 \text{ in.}$

$d = 10.47 \text{ in.} \qquad I_y = 16.7 \text{ in}^4$

Yielding about x–x axis:

$$\sigma_{\max} = \frac{P}{A}\left[1 + \frac{ec}{r^2}\sec\left(\frac{KL}{2r}\sqrt{\frac{P}{EA}}\right)\right]$$

$$\frac{ec}{r^2} = \frac{8\left(\frac{10.47}{2}\right)}{4.38^2} = 2.1830$$

$$\frac{KL}{2r}\sqrt{\frac{P}{EA}} = \frac{1.0(15)(12)}{2(4.38)}\sqrt{\frac{P}{29(10^3)(8.84)}} = 0.040583\sqrt{P}$$

$$50(8.84) = P[1 + 2.1830\sec(0.040583\sqrt{P})]$$

By trial and error:

$P = 129$ kip controls **Ans.**

Buckling about y–y axis:

$$P_{cr} = \frac{\pi^2 EI}{(KL)^2} = \frac{\pi^2(29)(10^3)(16.7)}{[(1.0)(15)(12)]^2} = 147.5 \text{ kip}$$

Check: $\sigma_{cr} = \dfrac{P_{cr}}{A} = \dfrac{147.5}{8.84} = 16.7 \text{ ksi} < \sigma_Y$ OK

Ans:
$P = 129$ kip

***13–64.** The W10 × 30 structural A992 steel column is fixed at its bottom and free at its top. If it is subjected to the eccentric load of $P = 85$ kip, determine if the column fails by yielding. The column is braced so that it does not buckle about the y–y axis.

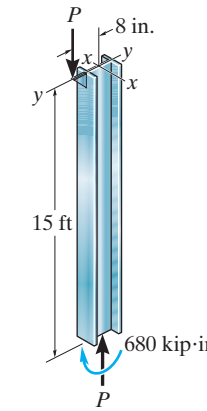

Section properties for W10 × 30:

$$A = 8.84 \text{ in}^2 \qquad I_x = 170 \text{ in}^4 \qquad r_x = 4.38 \text{ in.}$$

$$d = 10.47 \text{ in.} \qquad I_y = 16.7 \text{ in}^4$$

Yielding about *x–x* axis:

$$\sigma_{\max} = \frac{P}{A}\left[1 + \frac{ec}{r^2}\sec\left(\frac{KL}{2r}\sqrt{\frac{P}{EA}}\right)\right]$$

$$\frac{ec}{r^2} = \frac{8\left(\frac{10.47}{2}\right)}{4.38^2} = 2.1830$$

$$\frac{KL}{2r}\sqrt{\frac{P}{EA}} = \frac{(2)(15)(12)}{2(4.38)}\sqrt{\frac{P}{29(10^3)(8.84)}} = 0.081166\sqrt{P}$$

$$50(8.84) = P[1 + 2.1830\sec(0.8166)\sqrt{P}]$$

By trial and error:

$$P = 104 \text{ kip}$$

Since 104 kip > 85 kip, the column does not fail.

No **Ans.**

13–65. Determine the maximum eccentric load P the 2014-T6-aluminum-alloy strut can support without causing it either to buckle or yield. The ends of the strut are pin connected.

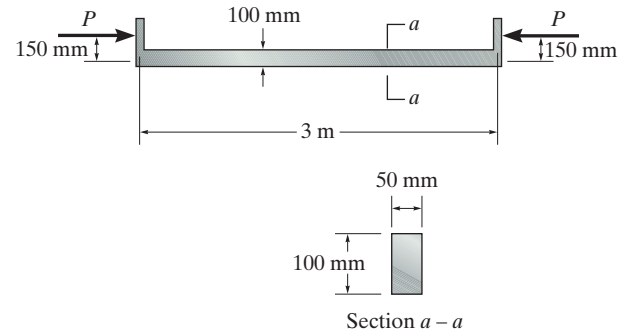

Section Properties. The necessary section properties are

$$A = 0.05(0.1) = 5\left(10^{-3}\right)\text{m}^2$$

$$I_y = \frac{1}{12}(0.1)\left(0.05^3\right) = 1.04167\left(10^{-6}\right)\text{ m}^4$$

$$r_x = \sqrt{\frac{I_x}{A}} = \sqrt{\frac{4.1667\left(10^{-6}\right)}{5\left(10^{-3}\right)}} = 0.02887\text{ m}$$

For a column that is pinned at both of its ends $K = 1$. Thus,

$$(KL)_x = (KL)_y = 1(3) = 3\text{ m}$$

Buckling About the Weak Axis. Applying Euler's formula,

$$P_{cr} = \frac{\pi^2 E I_y}{(KL)_y{}^2} = \frac{\pi^2\left[73.1\left(10^9\right)\right]\left[1.04167\left(10^{-6}\right)\right]}{3^2} = 83.50\text{ kN} = 83.5\text{ kN} \qquad \textbf{Ans.}$$

Critical Stress: Euler's formula is valid only if $\sigma_{cr} < \sigma_Y$.

$$\sigma_{cr} = \frac{P_{cr}}{A} = \frac{83.50\left(10^3\right)}{5\left(10^{-3}\right)} = 16.70\text{ MPa} < \sigma_Y = 414\text{ MPa} \qquad \text{O.K.}$$

Yielding About Strong Axis. Applying the secant formula,

$$\sigma_{max} = \frac{P}{A}\left[1 + \frac{ec}{r_x{}^2}\sec\left[\frac{(KL)_x}{2r_x}\sqrt{\frac{P}{EA}}\right]\right]$$

$$= \frac{83.50\left(10^3\right)}{5\left(10^{-3}\right)}\left[1 + \frac{0.15(0.05)}{0.02887^2}\sec\left[\frac{3}{2(0.02887)}\sqrt{\frac{83.50\left(10^3\right)}{73.1\left(10^9\right)\left[5\left(10^{-3}\right)\right]}}\right]\right]$$

$$= 229.27\text{ MPa} < \sigma_Y = 414\text{ MPa} \qquad \text{O.K.}$$

Ans:
$P_{cr} = 83.5$ kN

13–66. The W10 × 45 structural A992 steel column is assumed to be pinned at its top and bottom. If the 12-kip load is applied at an eccentric distance of 8 in., determine the maximum stress in the column. Take $L = 12.6$ ft.

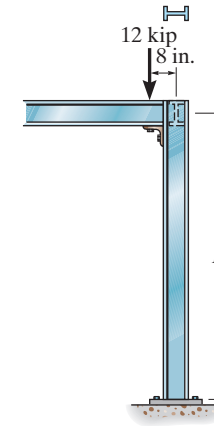

Section Properties for W10 × 45:

$A = 13.3 \text{ in}^2 \qquad I_x = 248 \text{ in}^4 \qquad I_y = 53.4 \text{ in}^4$

$r_x = 4.32 \text{ in.} \qquad d = 10.10 \text{ in.}$

Secant Formula:

$$\sigma_{\max} = \frac{P}{A}\left[1 + \frac{ec}{r^2}\sec\left(\frac{KL}{2r}\sqrt{\frac{P}{EA}}\right)\right]$$

$$\frac{P}{A} = \frac{12}{13.3} = 0.90226 \text{ ksi}$$

$$\frac{ec}{r^2} = \frac{8\left(\frac{10.10}{2}\right)}{4.32^2} = 2.16478$$

$$\left(\frac{KL}{2r}\right)\sqrt{\frac{P}{EA}} = \frac{1(12.6)(12)}{2(4.32)}\sqrt{\frac{12}{29(10^3)(13.3)}} = 0.097612$$

$\sigma_{\max} = 0.90226\,[1 + 2.16478 \sec(0.097612)] = 2.86$ ksi **Ans.**

Ans:
$\sigma_{\max} = 2.86$ ksi

13–67. The W10 × 45 structural A992 steel column is assumed to be pinned at its top and bottom. If the 12-kip load is applied at an eccentric distance of 8 in., determine the maximum stress in the column. Take $L = 9$ ft.

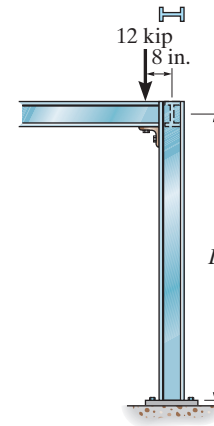

Section properties for W10 × 45:

$A = 13.3 \text{ in}^2 \qquad I_x = 248 \text{ in}^4 \qquad I_y = 53.4 \text{ in}^4$

$r_x = 4.32 \text{ in.} \qquad d = 10.10 \text{ in.}$

Secant Formula:

$$\sigma_{\max} = \frac{P}{A}\left[1 + \frac{ec}{r^2}\sec\left(\frac{KL}{2r}\sqrt{\frac{P}{EA}}\right)\right]$$

$$\frac{P}{A} = \frac{12}{13.3} = 0.90226 \text{ ksi}$$

$$\frac{ec}{r^2} = \frac{8\left(\frac{10.10}{2}\right)}{4.32^2} = 2.16478$$

$$\left(\frac{KL}{2r}\right)\sqrt{\frac{P}{EA}} = \frac{1(9)(12)}{2(4.32)}\sqrt{\frac{12}{29(10^3)(13.3)}} = 0.069723$$

$\sigma_{\max} = 0.90226[1 + 2.16478 \sec(0.069723)] = 2.86 \text{ ksi}$ **Ans.**

Ans:
$\sigma_{\max} = 2.86$ ksi

***13–68.** The W14 × 53 structural A992 steel column is fixed at its base and free at its top. If $P = 75$ kip, determine the sidesway deflection at its top and the maximum stress in the column.

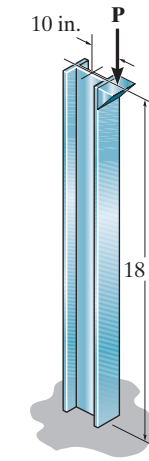

Section properties for a W14 × 53:

$$A = 15.6 \text{ in}^2 \qquad I_x = 541 \text{ in}^4 \qquad I_y = 57.7 \text{ in}^4$$

$$r_x = 5.89 \text{ in.} \qquad d = 13.92 \text{ in.}$$

Maximum Deflection:

$$v_{\max} = e\left[\sec\left(\sqrt{\frac{P}{EI}}\frac{KL}{2}\right) - 1\right]$$

$$\sqrt{\frac{P}{EI}}\frac{KL}{2} = \sqrt{\frac{75}{29(10^3)541}}\left(\frac{2.0(18)(12)}{2}\right) = 0.472267$$

$$v_{\max} = 10[\sec(0.472267) - 1] = 1.23 \text{ in.} \qquad \textbf{Ans.}$$

Maximum Stress:

$$\sigma_{\max} = \frac{P}{A}\left[1 + \frac{ec}{r^2}\sec\left(\frac{KL}{2r}\sqrt{\frac{P}{EA}}\right)\right]$$

$$\frac{P}{A} = \frac{75}{15.6} = 4.808 \text{ ksi}$$

$$\frac{ec}{r^2} = \frac{10\left(\frac{13.92}{2}\right)}{5.89^2} = 2.0062$$

$$\frac{KL}{2r}\sqrt{\frac{P}{EA}} = \frac{2.0(18)(12)}{2(5.89)}\sqrt{\frac{75}{29(10^3)(15.6)}} = 0.47218$$

$$\sigma_{\max} = 4.808[1 + 2.0062\sec(0.47218)] = 15.6 \text{ ksi} < \sigma_Y \qquad \textbf{Ans.}$$

13–69. The W14 × 53 column is fixed at its base and free at its top. Determine the maximum eccentric load P that it can support without causing it to buckle or yield. $E_{st} = 29(10^3)$ ksi, $\sigma_Y = 50$ ksi.

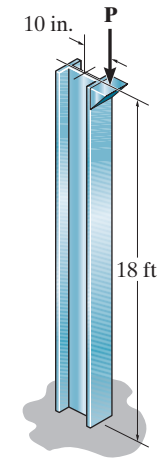

Section Properties for a W14 × 53:

$A = 15.6 \text{ in}^2 \qquad I_x = 541 \text{ in}^4 \qquad I_y = 57.7 \text{ in}^4$

$r_x = 5.89 \text{ in.} \qquad d = 13.92 \text{ in.}$

Buckling about *y–y* axis:

$$P = P_{cr} = \frac{\pi^2 EI}{(KL)^2} = \frac{\pi^2(29)(10^3)(57.7)}{[(2.0)(18)(12)]^2} = 88.5 \text{ kip} \quad \text{controls} \qquad \textbf{Ans.}$$

Check: $\sigma_{cr} = \dfrac{P_{cr}}{A} = \dfrac{88.5}{15.6} = 5.67 \text{ ksi} < \sigma_Y$ **OK**

Yielding about *x–x* axis:

$$\sigma_{max} = \frac{P}{A}\left[1 + \frac{ec}{r^2}\sec\left(\frac{KL}{2r}\sqrt{\frac{P}{EA}}\right)\right]$$

$$\frac{ec}{r^2} = \frac{10\left(\frac{13.92}{2}\right)}{5.89^2} = 2.0062$$

$$\left(\frac{KL}{2r}\right)\sqrt{\frac{P}{EA}} = \frac{2.0(18)(12)}{2(5.89)}\sqrt{\frac{P}{29(10^3)(15.6)}} = 0.054523\sqrt{P}$$

$$50(15.6) = P[1 + 2.0062 \sec(0.054523\sqrt{P})]$$

By trial and error:

$P = 204$ kip

Ans:
$P = 88.5$ kip

13–70. A column of intermediate length buckles when the compressive stress is 40 ksi. If the slenderness ratio is 60, determine the tangent modulus.

$$\sigma_{cr} = \frac{\pi^2 E_t}{\left(\frac{KL}{r}\right)^2}; \qquad \left(\frac{KL}{r}\right) = 60$$

$$40 = \frac{\pi^2 E_t}{(60)^2}$$

$$E_t = 14590 \text{ ksi} = 14.6\,(10^3) \text{ ksi}, \qquad \textbf{Ans.}$$

Ans:
$E_t = 14.6(10^3)$ ksi

13–71. The aluminum rod is fixed at its base free at its top. If the eccentric load $P = 200$ kN is applied, determine the greatest allowable length L of the rod so that it does not buckle or yield. $E_{al} = 72$ GPa, $\sigma_Y = 410$ MPa.

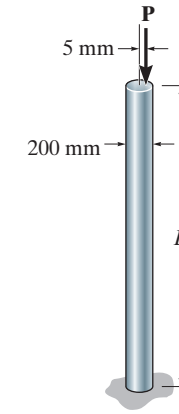

Section Properties:

$$A = \pi(0.1^2) = 0.031416 \text{ m}^2 \qquad I = \frac{\pi}{4}(0.1^4) = 78.54(10^{-6}) \text{ m}^4$$

$$r = \sqrt{\frac{I}{A}} = \sqrt{\frac{78.54(10^{-6})}{0.031416}} = 0.05 \text{ m}$$

Yielding:

$$\sigma_{max} = \frac{P}{A}\left[1 + \frac{ec}{r^2}\sec\left(\frac{KL}{2r}\sqrt{\frac{P}{EA}}\right)\right]$$

$$\frac{P}{A} = \frac{200(10^3)}{0.031416} = 6.3662(10^4) \text{ Pa}$$

$$\frac{ec}{r^2} = \frac{0.005(0.1)}{(0.05)^2} = 0.2$$

$$\left(\frac{KL}{2r}\right)\sqrt{\frac{P}{EA}} = \frac{2.0(L)}{2(0.05)}\sqrt{\frac{200(10^3)}{72(10^9)(0.031416)}} = 0.188063L$$

$$410(10^4) = 6.3662(10^6)[1 + 0.2 \sec(0.188063\text{ L})]$$

$$L = 8.34 \text{ m} \qquad \text{(controls)}$$ **Ans.**

Buckling about *x–x* axis:

$$\frac{P}{A} = 6.36 \text{ MPa} < \sigma_Y \qquad \text{Euler formula is valid.}$$

$$P_{cr} = \frac{\pi^2 EI}{(KL)^2}$$

$$200(10^3) = \frac{\pi^2(72)(10^9)(78.54)(10^{-4})}{[(2.0)(L)]^2}$$

$$L = 8.35 \text{ m}$$

Ans:
$L = 8.34$ m

***13–72.** The aluminum rod is fixed at its base free at its top. If the length of the rod is $L = 2$ m, determine the greatest allowable load P that can be applied so that the rod does not buckle or yield. Also, determine the largest sidesway deflection of the rod due to the loading. $E_{al} = 72$ GPa, $\sigma_Y = 410$ MPa.

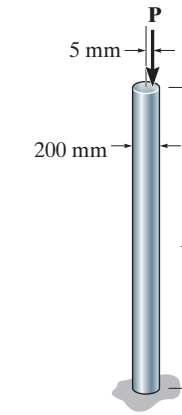

Section Properties:

$$A = \pi(0.1^2) = 0.031416 \text{ m}^2 \qquad I = \frac{\pi}{4}(0.1^4) = 78.54(10^{-6}) \text{ m}^4$$

$$r = \sqrt{\frac{I}{A}} = \sqrt{\frac{78.54(10^{-6})}{0.031416}} = 0.05 \text{ m}$$

Yielding:

$$\sigma_{max} = \frac{P}{A}\left[1 + \frac{ec}{r^2}\sec\left(\frac{KL}{2r}\sqrt{\frac{P}{EA}}\right)\right]$$

$$\frac{ec}{r^2} = \frac{(0.005)(0.1)}{0.05^2} = 0.2$$

$$\left(\frac{KL}{2r}\right)\sqrt{\frac{P}{EA}} = \frac{2(2)}{2(0.05)}\sqrt{\frac{P}{72\,(10^9)(0.031416)}} = 0.8410(10^{-3})\sqrt{P}$$

$$410(10^4)(0.031416) = P[(1 + 0.2\sec(0.8410(10^{-3})\sqrt{P})]$$

By trial and Error:

$P = 3.20$ MN (controls) **Ans.**

Buckling:

$$P = P_{cr} = \frac{\pi^2 EI}{(KL)^2} = \frac{\pi^2(72)(10^9)(78.54)(10^{-6})}{[(2.0)(2)]^2} = 3488 \text{ kN}$$

Check: $\sigma_{cr} = \dfrac{P_{cr}}{A} = \dfrac{3488(10^3)}{0.031416} = 111 \text{ MPa} < \sigma_Y$ OK

Maximum deflection:

$$v_{max} = e\left[\sec\left(\sqrt{\frac{P}{EI}}\frac{KL}{2}\right) - 1\right]$$

$$\sqrt{\frac{P}{EI}}\frac{KL}{2} = \sqrt{\frac{3.20(10^6)}{72(10^9)(78.54)(10^{-6})}}\left(\frac{2.0(2)}{2}\right) = 1.5045$$

$v_{max} = 5[\sec(1.5045) - 1] = 70.5$ mm **Ans.**

13–73. The stress-strain diagram of the material of a column can be approximated as shown. Plot P/A vs. KL/r for the column.

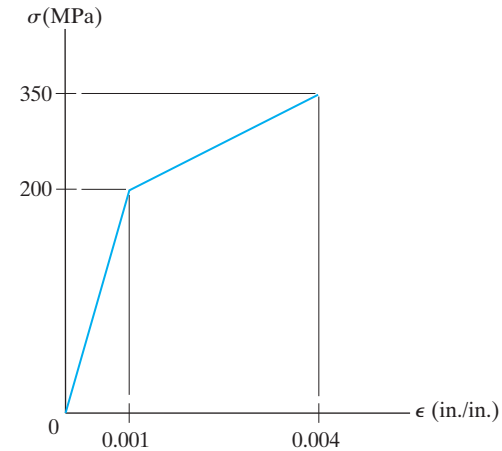

Tangent Moduli. From the stress - strain diagram,

$$(E_t)_1 = \frac{200(10^6)}{0.001} = 200\,\text{GPa} \qquad 0 \le \sigma < 200\ \text{MPa}$$

$$(E_t)_2 = \frac{(350 - 200)(10^6)}{0.004 - 0.001} = 50\,\text{GPa} \qquad 200\ \text{MPa} < \sigma \le 350\ \text{MPa}$$

Critical Stress. Applying Engesser's equation,

$$\sigma_{cr} = \frac{P}{A} = \frac{\pi^2 E_t}{\left(\frac{KL}{r}\right)^2} \qquad (1)$$

If $E_t = (E_t)_1 = 200\,\text{GPa}$, Eq. (1) becomes

$$\frac{P}{A} = \frac{\pi^2\left[200(10^9)\right]}{\left(\frac{KL}{r}\right)^2} = \frac{1.974(10^6)}{\left(\frac{KL}{r}\right)^2}\ \text{MPa}$$

When $\sigma_{cr} = \frac{P}{A} = \sigma_Y = 200\ \text{MPa}$, this equation becomes

$$200(10^6) = \frac{\pi^2\left[200(10^9)\right]}{\left(\frac{KL}{r}\right)^2}$$

$$\frac{KL}{r} = 99.346 = 99.3$$

If $E_t = (E_t)_2 = 50\ \text{GPa}$, Eq. (1) becomes

$$\frac{P}{A} = \frac{\pi^2\left[50(10^9)\right]}{\left(\frac{KL}{r}\right)^2} = \frac{0.4935(10^6)}{\left(\frac{KL}{r}\right)^2}\ \text{MPa}$$

when $\sigma_{cr} = \frac{P}{A} = \sigma_Y = 200\ \text{MPa}$, this equation gives

$$200(10^6) = \frac{\pi^2\left[50(10^9)\right]}{\left(\frac{KL}{r}\right)^2}$$

$$\frac{KL}{r} = 49.67 = 49.7$$

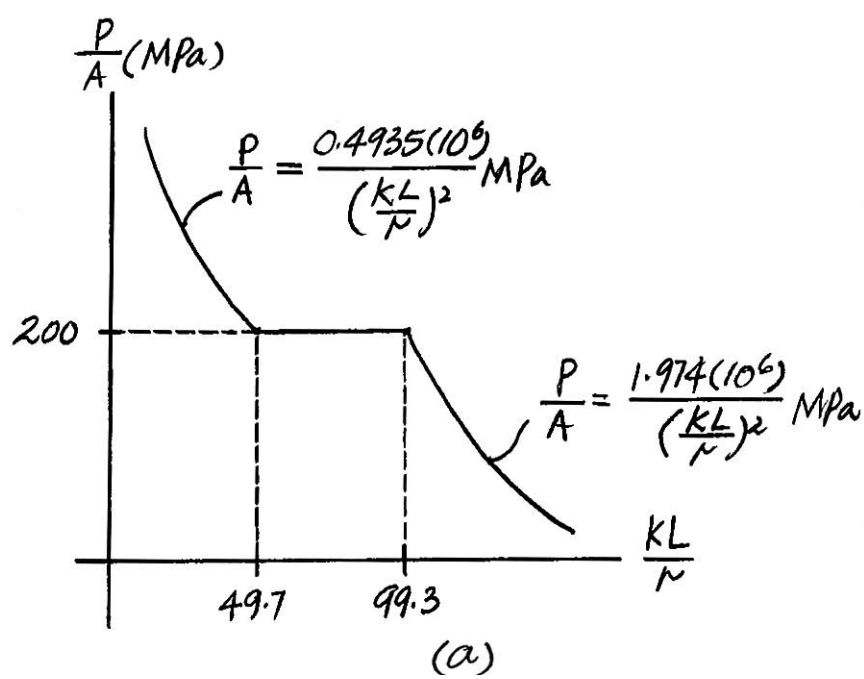

Using these results, the graphs of $\frac{P}{A}$ vs. $\frac{KL}{r}$ as shown in Fig. *a* can be plotted.

13–74. Construct the buckling curve, P/A versus L/r, for a column that has a bilinear stress–strain curve in compression as shown.

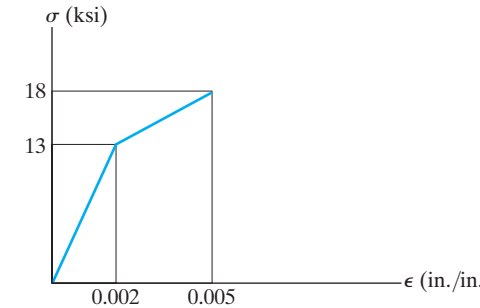

$$E_1 = \frac{13}{0.002} = 6.5(10^3)\text{ ksi}$$

$$E_2 = \frac{18 - 13}{0.005 - 0.002} = 1.6667(10^3)\text{ ksi}$$

For $E_t = E_1$

$$\sigma_{cr} = \frac{P}{A} = \frac{\pi^2 E_r}{\left(\frac{L}{r}\right)^2} = \frac{\pi^2\,(6.5)(10^3)}{\left(\frac{L}{r}\right)^2} = \frac{64152}{\left(\frac{L}{r}\right)^2}$$

$$\sigma_{cr} = 13 = \frac{\pi^2\,(6.5)(10^3)}{\left(\frac{L}{r}\right)^2}; \qquad \frac{L}{r} = 70.2$$

For $E_t = E_2$

$$\sigma_{cr} = \frac{P}{A} = \frac{\pi^2\,(1.6667)(10^3)}{\left(\frac{L}{r}\right)^2} = \frac{16449}{\left(\frac{L}{r}\right)^2}$$

$$\sigma_{cr} = 13 = \frac{\pi^2\,(1.6667)(10^3)}{\left(\frac{L}{r}\right)^2}; \qquad \frac{L}{r} = 35.6$$

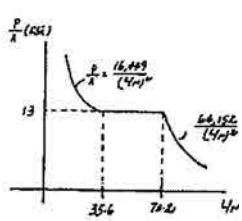

13–75. The stress–strain diagram of the material can be approximated by the two line segments shown. If a bar having a diameter of 80 mm and a length of 1.5 m is made from this material, determine the critical load provided the ends are pinned. Assume that the load acts through the axis of the bar. Use Engesser's equation.

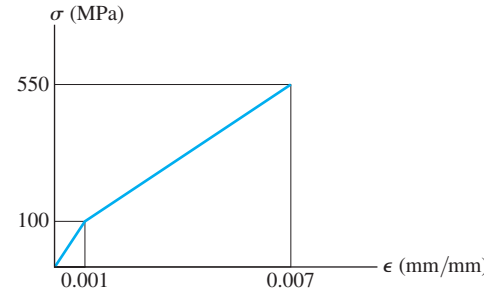

$$E_1 = \frac{100(10^6)}{0.001} = 100\text{ GPa}$$

$$E_2 = \frac{550(10^6) - 100(10^6)}{0.007 - 0.001} = 75\text{ GPa}$$

Section Properties:

$$I = \frac{\pi}{4}c^4; \qquad A = \pi c^2$$

$$r = \sqrt{\frac{I}{A}} = \sqrt{\frac{\frac{\pi}{4}c^4}{\pi c^2}} = \frac{c}{2} = \frac{0.04}{2} = 0.02\text{ m}$$

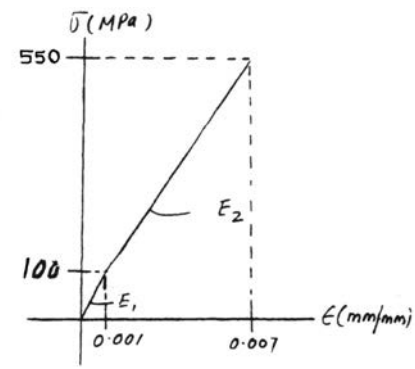

Engesser's Equation:

$$\frac{KL}{r} = \frac{1.0(1.5)}{0.02} = 75$$

$$\sigma_{cr} = \frac{\pi^2 E_r}{(\frac{KL}{r})^2} = \frac{\pi^2 E_r}{(75)^2} = 1.7546(10^{-3})\,E_t$$

Assume $E_t = E_1 = 100$ GPa

$$\sigma_{cr} = 1.7546\,(10^{-3})(100)(10^9) = 175\text{ MPa} > 100\text{ MPa}$$

Therefore, inelastic buckling occurs:

Assume $E_t = E_2 = 75$ GPa

$$\sigma_{cr} = 1.7546\,(10^{-3})\,(75)(10^9) = 131.6\text{ MPa}$$

$100\text{ MPa} < \sigma_{cr} < 550\text{ MPa}$ OK

Critical Load:

$$P_{cr} = \sigma_{cr}A = 131.6(10^6)(\pi)(0.04^2) = 661\text{ kN}$$ **Ans.**

Ans:
$P_{cr} = 661$ kN

***13–76.** The stress–strain diagram of the material can be approximated by the two line segments shown. If a bar having a diameter of 80 mm and a length of 1.5 m is made from this material, determine the critical load provided the ends are fixed. Assume that the load acts through the axis of the bar. Use Engesser's equation.

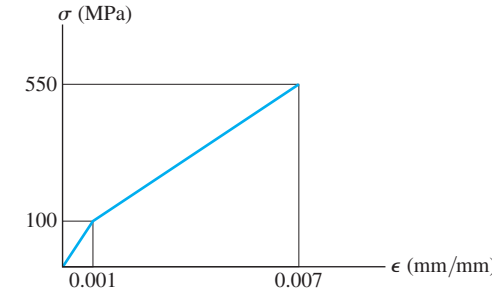

$$E_1 = \frac{100(10^6)}{0.001} = 100 \text{ GPa}$$

$$E_2 = \frac{550(10^6) - 100(10^6)}{0.007 - 0.001} = 75 \text{ GPa}$$

Section Properties:

$$I = \frac{\pi}{4}c^4; \qquad A = \pi c^2$$

$$r = \sqrt{\frac{I}{A}} = \sqrt{\frac{\frac{\pi}{4}c^4}{\pi c^2}} = \frac{c}{2} = \frac{0.04}{2} = 0.02 \text{ m}$$

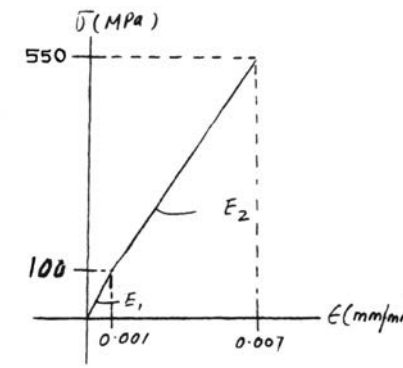

Engesser's Equation:

$$\frac{KL}{r} = \frac{0.5(1.5)}{0.02} = 37.5$$

$$\sigma_{cr} = \frac{\pi^2 E_r}{(\frac{KL}{r})^2} = \frac{\pi^2 E_r}{(37.5)^2} = 7.018385(10^{-3})\,E_t$$

Assume $E_t = E_1 = 100$ GPa

$$\sigma_{cr} = 7.018385(10^{-3})(100)(10^9) = 701.8 \text{ MPa} > 100 \text{ MPa} \qquad \text{NG}$$

Assume $E_r = E_2 = 75$ GPa

$$\sigma_{cr} = 7.018385(10^{-3})(75)(10^9) = 526.4 \text{ MPa}$$

$$100 \text{ MPa} < \sigma_{cr} < 550 \text{ MPa} \qquad \text{OK}$$

Critical Load:

$$P_{cr} = \sigma_{cr} A = 526.4(10^6)(\pi)(0.04^2) = 2645.9 \text{ kN}$$ **Ans.**

13–77. The stress–strain diagram of the material can be approximated by the two line segments shown. If a bar having a diameter of 80 mm and a length of 1.5 m is made from this material, determine the critical load provided one end is pinned and the other is fixed. Assume that the load acts through the axis of the bar. Use Engesser's equation.

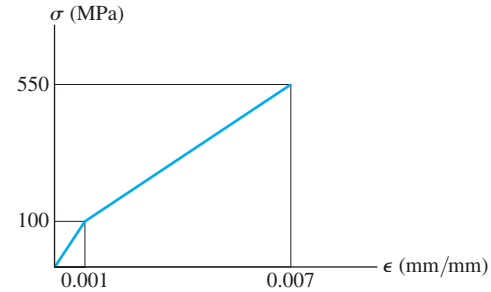

$$E_1 = \frac{100\,(10^6)}{0.001} = 100 \text{ GPa}$$

$$E_2 = \frac{550\,(10^6) - 100\,(10^6)}{0.007 - 0.001} = 75 \text{ GPa}$$

Section Properties:

$$I = \frac{\pi}{4}c^4; \qquad A = \pi c^2$$

$$r = \sqrt{\frac{I}{A}} = \sqrt{\frac{\frac{\pi}{4}c^4}{\pi c^2}} = \frac{c}{2} = \frac{0.04}{2} = 0.02 \text{ m}$$

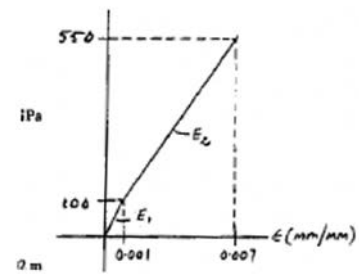

Engesser's Equation:

$$\frac{KL}{r} = \frac{0.7\,(1.5)}{0.02} = 52.5$$

$$\sigma_{cr} = \frac{\pi^2 E_r}{(\frac{KL}{r})^2} = \frac{\pi^2 E_r}{(52.5)^2} = 3.58081\,(10^{-3})\,E_t$$

Assume $E_t = E_1 = 100$ GPa

$\sigma_{cr} = 3.58081\,(10^{-3})(100)(10^9) = 358.1 \text{ MPa} > 100 \text{ MPa}$ NG

Assume $E_t = E_2 = 75$ GPa

$\sigma_{cr} = 3.58081\,(10^{-3})(75)(10^9) = 268.6 \text{ MPa}$

$100 \text{ MPa} < \sigma_{cr} < 550 \text{ MPa}$ OK

Critical Load:

$P_{cr} = \sigma_{cr} A = 268.6\,(10^6)(\pi)(0.04^2) = 1350 \text{ kN}$ **Ans.**

Ans:
$P_{cr} = 1350$ kN

13–78. Determine the largest length of a W10 × 12 structural A992 steel section if it is pin supported and is subjected to an axial load of 28 kip. Use the AISC equations.

For a W10 × 12, $r_y = 0.785$ in. $A = 3.54 \text{ in}^2$

$$\sigma = \frac{P}{A} = \frac{28}{3.54} = 7.91 \text{ ksi}$$

Assume a long column:

$$\sigma_{\text{allow}} = \frac{12\pi^2 E}{23(KL/r)^2}$$

$$\left(\frac{KL}{r}\right) = \sqrt{\frac{12\pi^2 E}{23\,\sigma_{\text{allow}}}} = \sqrt{\frac{12\pi^2(29)(10^3)}{23(7.91)}} = 137.4$$

$$\left(\frac{KL}{r}\right)_c = \sqrt{\frac{2\pi^2 E}{\sigma_Y}} = \sqrt{\frac{2\pi^2(29)(10^3)}{50}} = 107, \qquad \frac{KL}{r} > \left(\frac{KL}{r}\right)_c$$

Long column.

$$\frac{KL}{r} = 137.4$$

$$L = 137.4\left(\frac{r}{K}\right) = 137.4\left(\frac{0.785}{1}\right) = 107.86 \text{ in.} \qquad \textbf{Ans.}$$

$$= 8.99 \text{ ft} \qquad \textbf{Ans.}$$

Ans:
$L = 8.99$ ft

13–79. Using the AISC equations, select from Appendix B the lightest-weight structural A992 steel column that is 14 ft long and supports an axial load of 40 kip. The ends are fixed.

Try W6 × 9 $\quad A = 2.68 \text{ in}^2 \quad r_y = 0.905 \text{ in.}$

$$\left(\frac{KL}{r}\right)_c = \sqrt{\frac{2\pi^2 E}{\sigma_Y}} = \sqrt{\frac{2\pi^2(29)(10^3)}{50}} = 107$$

$$\frac{KL}{r_y} = \frac{0.5(14)(12)}{0.905} = 92.82$$

$$\frac{KL}{r_y} < \left(\frac{KL}{r}\right)_c$$

Intermediate column

$$\sigma_{\text{allow}} = \frac{[1 - \frac{1}{2}(\frac{KL/r}{(KL/r)c})^2]\sigma_y}{[\frac{5}{3} + \frac{3}{8}(\frac{KL/r}{(KL/r)c}) - \frac{1}{8}(\frac{KL/r}{(KL/r)c})^3]} = \frac{[1 - \frac{1}{2}(\frac{92.82}{107})^2]50}{[\frac{5}{3} + \frac{3}{8}(\frac{92.82}{107}) - \frac{1}{8}(\frac{92.82}{107})^3]} = 16.33 \text{ ksi}$$

$$\begin{aligned} P_{\text{allow}} &= \sigma_{\text{allow}} A \\ &= 16.33(2.68) \\ &= 43.8 \text{ kip} > 40 \text{ kip} \qquad \text{OK} \end{aligned}$$

Use W6 × 9 **Ans.**

Ans:
Use W6 × 9

***13–80.** Using the AISC equations, select from Appendix B the lightest-weight structural A992 steel column that is 14 ft long and supports an axial load of 40 kip. The ends are pinned. Take $\sigma_Y = 50$ ksi.

Try W6 × 15 $\quad (A = 4.43 \text{ in}^2 \quad r_y = 1.46 \text{ in.})$

$$\left(\frac{KL}{r}\right)_c = \sqrt{\frac{2\pi^2 E}{\sigma_Y}} = \sqrt{\frac{2\pi^2(29)(10^3)}{50}} = 107$$

$$\left(\frac{KL}{r_y}\right) = \frac{(1.0)(14)(12)}{1.46} = 115.1, \left(\frac{KL}{r_y}\right) > \left(\frac{KL}{r}\right)_c$$

Long column

$$\sigma_{\text{allow}} = \frac{12\,\pi^2 E}{23(KL/r)^2} = \frac{12\pi^2(29)(10^3)}{23(115.1)^2} = 11.28 \text{ ksi}$$

$$P_{\text{allow}} = \sigma_{\text{allow}} A$$

$$= 11.28(4.43) = 50.0 \text{ kip} > 40 \text{ kip} \qquad \text{OK}$$

Use W6 × 15 **Ans.**

13–81. Determine the largest length of a W8 × 31 structural A992 steel section if it is pin supported and is subjected to an axial load of 130 kip. Use the AISC equations.

For a $W8 \times 31$, $\quad A = 9.13 \text{ in}^2 \quad r_y = 2.02$ in.

$$\sigma = \frac{P}{A} = \frac{130}{9.13} = 14.239 \text{ ksi}$$

Assume a long column:

$$\sigma_{\text{allow}} = \frac{12\pi^2 E}{23(KL/r)^2}$$

$$\left(\frac{KL}{r}\right) = \sqrt{\frac{12\,\pi^2 E}{23\,\sigma_{\text{allow}}}} = \sqrt{\frac{12\pi^2(29)(10^3)}{23(14.239)}} = 102.4$$

$$\left(\frac{KL}{r}\right)_c = \sqrt{\frac{2\pi^2 E}{\sigma_Y}} = \sqrt{\frac{2\pi^2(29)(10^3)}{50}} = 107, \frac{KL}{r} < \left(\frac{KL}{r}\right)_e$$

Intermediate column

$$\sigma_{\text{allow}} = \frac{\left[1 - \frac{1}{2}\left(\frac{KL/r}{(KL/r)c}\right)^2\right]\sigma_Y}{\left[\frac{5}{3} + \frac{3}{8}\left(\frac{KL/r}{(KL/r)c}\right) - \frac{1}{3}\left(\frac{KL/r}{(KL/r)c}\right)^3\right]}$$

$$14.239 = \frac{\left[1 - \frac{1}{2}\left(\frac{KL/r}{107}\right)^2\right]50}{\left[\frac{5}{3} + \frac{3}{8}\left(\frac{KL/r}{107}\right) - \frac{1}{3}\left(\frac{KL/r}{107}\right)^3\right]}$$

$$1.5722(10^{-3})\left(\frac{KL}{r}\right)^2 + 0.049902\left(\frac{KL}{r}\right) - 1.4529(10^{-6})\left(\frac{KL}{r}\right)^3 = 26.269$$

By trial and error:

$$\frac{KL}{r} = 120.4$$

$$L = 120.4\left(\frac{2.02}{1.0}\right) = 243.24 \text{ in.} = 20.3 \text{ ft}$$ **Ans.**

Ans:
$L = 15.1$ ft

13–82. Using the AISC equations, select from Appendix B the lightest-weight structural A992 steel column that is 12 ft long and supports an axial load of 20 kip. The ends are pinned.

Try W6 × 12 $\quad A = 3.55 \text{ in}^2 \quad r_y = 0.918 \text{ in.}$

$$\left(\frac{KL}{r}\right)_c = \sqrt{\frac{2\pi^2 E}{\sigma_Y}} = \sqrt{\frac{2\pi^2(29)(10^3)}{50}} = 107$$

$$\left(\frac{KL}{r_y}\right) = \frac{(1.0)(12)(12)}{0.918} = 156.9, \left(\frac{KL}{r_y}\right) > \left(\frac{KL}{r}\right)_c$$

Long column

$$\sigma_{\text{allow}} = \frac{12\pi^2 E}{23(KL/r)^2} = \frac{12\pi^2(29)(10^3)}{23(156.9)^2} = 6.069 \text{ ksi}$$

$$P_{\text{allow}} = \sigma_{\text{allow}} A$$

$$= 6.069(3.55) = 21.5 \text{ kip} > 20 \text{ kip} \qquad \text{OK}$$

Use W6 × 12 **Ans.**

Ans:
Use W6 × 12

13–83. Determine the largest length of a W10 × 12 structural A992 steel section if it is fixed supported and is subjected to an axial load of 28 kip. Use the AISC equations.

For a W10 × 12, $r_y = 0.785$ in. $A = 3.54$ in^2

$$\sigma = \frac{P}{A} = \frac{28}{3.54} = 7.91 \text{ ksi}$$

Assume a long column:

$$\sigma_{\text{allow}} = \frac{12\,\pi^2 E}{23\,(KL/r)^2}$$

$$\left(\frac{KL}{r}\right)^2 = \frac{12\pi^2 E}{23\,\sigma_{\text{allow}}} = \sqrt{\frac{12\pi^2 E}{23\,\sigma_{\text{allow}}}} = \sqrt{\frac{12\pi^2(29)(10^3)}{23(7.91)}} = 137.4$$

$$\left(\frac{KL}{r}\right)_c = \sqrt{\frac{2\pi^2 E}{\sigma_Y}} = \sqrt{\frac{2\pi^2(29)(10^3)}{50}} = 107, \frac{KL}{r} > \left(\frac{KL}{r}\right)_c$$

Long column.

$$\frac{KL}{r} = 137.4$$

$$L = 137.4\left(\frac{r}{K}\right) = 137.4\left(\frac{0.785}{0.5}\right) = 215.72 \text{ in.}$$

$$L = 18.0 \text{ ft}$$ **Ans.**

Ans:
$L = 18.0$ ft

***13–84.** Using the AISC equations, select from Appendix B the lightest-weight structural A992 steel column that is 30 ft long and supports an axial load of 200 kip. The ends are fixed.

Try W8 × 40 $\quad r_y = 2.04$ in. $\quad A = 11.7\ \text{in}^2$

$$\left(\frac{KL}{r}\right)_c = \sqrt{\frac{2\,\pi^2 E}{\sigma_Y}} = \sqrt{\frac{2\,\pi^2\,(29)(10^3)}{50}} = 107$$

$$\frac{KL}{r_y} = \frac{0.5(30)(12)}{2.04} = 88.24$$

$$\left(\frac{KL}{r_y}\right) < \left(\frac{KL}{r}\right)_c \text{ intermediate column.}$$

$$\sigma_{\text{allow}} = \frac{\left\{1 - \frac{1}{2}\left[\frac{\frac{KL}{r}}{\left(\frac{KL}{r}\right)_c}\right]^2\right\}\sigma_Y}{\left\{\frac{5}{3} + \frac{3}{8}\left[\frac{\frac{KL}{r}}{\left(\frac{KL}{r}\right)_c}\right] - \frac{1}{8}\left[\frac{\frac{KL}{r}}{\left(\frac{KL}{r}\right)_c}\right]^3\right\}}$$

$$= \frac{\left\{1 - \frac{1}{2}\left[\frac{86.54}{107}\right]^2\right\}50}{\left\{\frac{5}{3} + \frac{3}{8}\left[\frac{86.54}{107}\right] - \frac{1}{8}\left[\frac{86.54}{107}\right]^3\right\}} = 17.315 \text{ ksi}$$

$P_{\text{allow}} = \sigma_{\text{allow}} A = 17.315(11.7) = 203 \text{ kip} > P = 200 \text{ kip}$ $\quad$ OK

Use W8 × 40 **Ans.**

13–85. Determine the largest length of a W8 × 31 structural A992 steel section if it is pin supported and is subjected to an axial load of 18 kip. Use the AISC equations.

Section properties: For W8 × 31 $\quad r_y = 2.02$ in. $\quad A = 9.13\ \text{in}^2$

Assume it is a long column:

$$\sigma_{\text{allow}} = \frac{12\pi^2 E}{23\left(\frac{KL}{r}\right)^2};\ \left(\frac{KL}{r}\right)^2 = \frac{12\,\pi^2 E}{23\,\sigma_{\text{allow}}}$$

$$\frac{KL}{r} = \sqrt{\frac{12\pi^2 E}{23\,\sigma_{\text{allow}}}}$$

Here $\sigma_{\text{allow}} = \dfrac{P}{A} = \dfrac{18}{9.13} = 1.9715$ ksi

$$\frac{KL}{r} = \sqrt{\frac{12\pi^2(29)(10^3)}{23(1.9715)}} = 275.2 > 200$$

Thus use $\dfrac{KL}{r} = 200$

$$\frac{1.0\,(L)}{2.02} = 200$$

$L = 404$ in. $= 33.7$ ft **Ans.**

Ans:
$L = 33.7$ ft

13–86. Using the AISC equations, select from Appendix B the lightest-weight structural A992 steel column that is 12 ft long and supports an axial load of 40 kip. The ends are fixed.

Try W6 × 9 $\quad A = 2.68 \text{ in}^2 \quad r_y = 0.905 \text{ in.}$

$$\left(\frac{KL}{r}\right)_c = \sqrt{\frac{2\,\pi^2 E}{\sigma_Y}} = \sqrt{\frac{2\,\pi^2\,(29)(10^3)}{50}} = 107$$

$$\frac{KL}{r_y} = \frac{0.5(12)(12)}{0.905} = 79.56$$

$$\frac{KL}{r_y} < \left(\frac{KL}{r}\right)_c$$

Intermediate column

$$\sigma_{\text{allow}} = \frac{\left[1 - \frac{1}{2}\left(\frac{KL/r}{(KL/r)_c}\right)^2\right]\sigma_y}{\left[\frac{5}{3} + \frac{3}{8}\left(\frac{KL/r}{(KL/r)_c}\right) - \frac{1}{8}\left(\frac{KL/r}{(KL/r)_c}\right)^3\right]} = \frac{\left[1 - \frac{1}{2}\left(\frac{79.56}{107}\right)^2\right]50}{\left[\frac{5}{3} + \frac{3}{8}\left(\frac{79.56}{107}\right) - \frac{1}{8}\left(\frac{79.56}{107}\right)^3\right]} = 15.40 \text{ ksi}$$

$$P_{\text{allow}} = \sigma_{\text{allow}} A$$

$$= 19.10\,(2.68)$$

$$= 51.2 \text{ kip} > 40 \text{ kip} \qquad \text{OK}$$

Use W6 × 9 **Ans.**

Ans:
Use W6 × 9

13–87. A 5-ft-long rod is used in a machine to transmit an axial compressive load of 3 kip. Determine its smallest diameter if it is pin connected at its ends and is made of a 2014-T6 aluminum alloy.

Section Properties:

$$A = \frac{\pi}{4} d^2 ; \qquad I = \frac{\pi}{4}\left(\frac{d}{2}\right)^4 = \frac{\pi d^4}{64}$$

$$r = \sqrt{\frac{I}{A}} = \sqrt{\frac{\frac{\pi d^4}{64}}{\frac{\pi}{4} d^2}} = \frac{d}{4}$$

$$\sigma_{\text{allow}} = \frac{P}{A} = \frac{3}{\frac{\pi}{4} d^2} = \frac{3.820}{d^2}$$

Assume long column:

$$\frac{KL}{r} = \frac{1.0\,(5)(12)}{\frac{d}{4}} = \frac{240}{d}$$

$$\sigma_{\text{allow}} = \frac{54\,000}{\left(\frac{K\,L}{r}\right)^2} ; \qquad \frac{3.820}{d^2} = \frac{54000}{\left[\frac{240}{d}\right]^2}$$

$d = 1.42$ in. **Ans.**

$$\frac{K\,L}{r} = \frac{240}{1.42} = 169 > 55$$ O.K.

Ans:
$d = 1.42$ in.

***13–88.** Determine the largest length of a W8 × 31 structural A992 steel column if it is to support an axial load of 10 kip. The ends are pinned.

W8 × 31 $\quad r_y = 2.02$ in. $\quad A = 9.13$ in^2

$$\left(\frac{KL}{r}\right)_c = \sqrt{\frac{2\,\pi^2 E}{\sigma_Y}} = \sqrt{\frac{2\,\pi^2\,(29)(10^3)}{36}} = 126.1$$

$$\frac{KL}{r_y} = \frac{1.0\,L}{2.02}$$

Assume $\dfrac{KL}{r_y} > \left(\dfrac{KL}{r}\right)_c$

$$\sigma_{\text{allow}} = \frac{12\pi^2 E}{23\left(\frac{KL}{r}\right)^2}; \qquad \frac{KL}{r} = \sqrt{\frac{12\,\pi^2 E}{23\,\sigma_{\text{allow}}}}$$

Here $\sigma_{\text{allow}} = \dfrac{P}{A} = \dfrac{10}{9.13} = 1.10$

$$\frac{KL}{r} = \sqrt{\frac{12\pi^2(29)(10^3)}{23\,(1.10)}} = 369.2 > \left(\frac{KL}{r}\right)_c \qquad \text{Assumption} \qquad \text{OK}$$

$$\frac{1.0\,(L)}{2.02} = 369.2$$

$L = 745.9$ in. $= 62.2$ ft **Ans.**

13–89. Using the AISC equations, check if a column having the cross section shown can support an axial force of 1500 kN. The column has a length of 4 m, is made from A992 steel, and its ends are pinned.

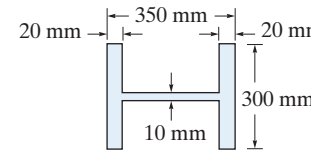

Section Properties:

$$A = 0.3(0.35) - 0.29(0.31) = 0.0151 \text{ m}^2$$

$$I_y = \frac{1}{12}(0.04)\left(0.3^3\right) + \frac{1}{12}(0.31)\left(0.01^3\right) = 90.025833\left(10^{-6}\right) \text{ m}^4$$

$$r_y = \sqrt{\frac{I_y}{A}} = \sqrt{\frac{90.02583(10^{-6})}{0.0151}} = 0.077214 \text{ m}$$

Slenderness Ratio: For a column pinned at both ends, $K = 1$. Thus,

$$\left(\frac{KL}{r}\right)_y = \frac{1(4)}{0.077214} = 51.80$$

AISC Column Formula: For A992 steel, $\left(\frac{KL}{r}\right)_c = \sqrt{\frac{2\pi^2 E}{\sigma_\gamma}}$ $= \sqrt{\frac{2\pi^2[200(10^9)]}{345(10^6)}} = 107$. Since $\frac{KL}{r} < \left(\frac{KL}{r}\right)_c$, the column is an *intermediate* column. Applying Eq. 13–23,

$$\sigma_{\text{allow}} = \frac{\left[1 - \frac{(KL/r)^2}{2(KL/r)_c^2}\right]\sigma_Y}{\frac{5}{3} + \frac{3(KL/r)}{8(KL/r)_c} - \frac{(KL/r)^3}{8(KL/r)_c^3}}$$

$$= \frac{\left[1 - \frac{(51.80^2)}{2(107^2)}\right](345)(10^6)}{\frac{5}{3} + \frac{3(51.80)}{8(107)} - \frac{(51.80^3)}{8(107^3)}}$$

$$= 166.1 \text{ MPa}$$

The allowable load is

$$P_{\text{allow}} = \sigma_{\text{allow}} A$$

$$= 166.1\left(10^6\right)(0.0151)$$

$$= 2508 \text{ kN} > P = 1500 \text{ kN} \qquad \text{O.K.}$$

Thus, the column is adequate. **Ans.**

Ans:
Yes.

13–90. The A992-steel tube is pinned at both ends. If it is subjected to an axial force of 150 kN, determine the maximum length of the tube using the AISC column design formulas.

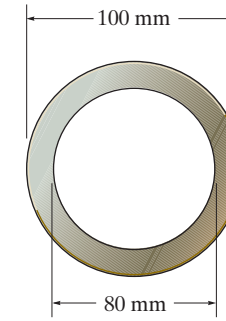

Section Properties.

$$A = \pi\left(0.05^2 - 0.04^2\right) = 0.9\left(10^{-3}\right)\pi \text{ m}^2$$

$$I = \frac{\pi}{4}\left(0.05^4 - 0.04^4\right) = 0.9225\left(10^{-6}\right)\pi \text{ m}^4$$

$$r = \sqrt{\frac{I}{A}} = \sqrt{\frac{0.9225\left(10^{-6}\right)\pi}{0.9\left(10^{-3}\right)\pi}} = 0.03202 \text{ m}$$

Slenderness Ratio. For a column pinned at both of its ends, $K = 1$. Thus,

$$\frac{KL}{r} = \frac{1(L)}{0.03202} = 31.23L$$

AISC Column Formulas.

$$\sigma_{\text{allow}} = \frac{12\pi^2 E}{23(KL/r)^2}$$

$$\frac{150\left(10^3\right)}{0.9\left(10^{-3}\right)\pi} = \frac{12\pi^2\left[200\left(10^9\right)\right]}{23(31.23L)^2}$$

$$L = 4.4607 \text{ m} = 4.46 \text{ m}$$ **Ans.**

Here, $\frac{KL}{r} = 31.23(4.4607) = 139.33$. For A992 steel $\left(\frac{KL}{r}\right)_c = \sqrt{\frac{2\pi^2 E}{\sigma_Y}}$ $= \sqrt{\frac{2\pi^2\left[200\left(10^9\right)\right]}{345\left(10^6\right)}} = 107$. Since $\left(\frac{KL}{r}\right)_c < \frac{KL}{r} < 200$, the assumption of a long column is correct.

Ans:
$L = 4.46$ m

13–91. The bar is made of a 2014-T6 aluminum alloy. Determine its smallest thickness b if its width is $5b$. Assume that it is pin connected at its ends.

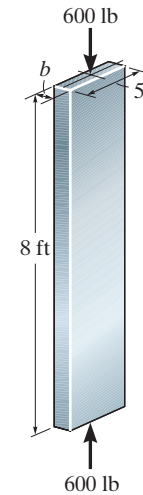

Section Properties:

$$A = b(5b) = 5b^2$$

$$I_y = \frac{1}{12}(5b)\left(b^3\right) = \frac{5}{12}b^4$$

$$r_y = \sqrt{\frac{I_y}{A}} = \sqrt{\frac{\frac{5}{12}b^4}{5b^2}} = \frac{\sqrt{3}}{6}b$$

Slenderness Ratio: For a column pinned at both ends, $K = 1$. Thus,

$$\left(\frac{KL}{r}\right)_y = \frac{1(8)(12)}{\frac{\sqrt{3}}{6}b} = \frac{332.55}{b}$$

Aluminum (2014 - T6 alloy) Column Formulas: Assume a *long* column and apply Eq. 13–26.

$$\sigma_{\text{allow}} = \frac{54\,000}{(KL/r)^2}$$

$$\frac{0.600}{5b^2} = \frac{54\,000}{\left(\frac{332.55}{b}\right)^2}$$

$$b = 0.7041 \text{ in.}$$

Here, $\frac{KL}{r} = \frac{332.55}{0.7041} = 472.3$. Since $\frac{KL}{r} > 55$, the assumption is correct. Thus,

$$b = 0.704 \text{ in.} \qquad \textbf{Ans.}$$

Ans:
$b = 0.704$ in.

***13–92.** The bar is made of a 2014-T6 aluminum alloy. Determine its smallest thickness b if its width is $5b$. Assume that it is fixed connected at its ends.

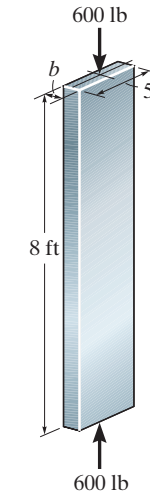

Section Properties:

$$A = b(5b) = 5b^2$$

$$I_y = \frac{1}{12}(5b)\left(b^3\right) = \frac{5}{12}b^4$$

$$r_y = \sqrt{\frac{I_y}{A}} = \sqrt{\frac{\frac{5}{12}b^4}{5b^2}} = \frac{\sqrt{3}}{6}b$$

Slenderness Ratio: For a column fixed at both ends, $K = 0.5$. Thus,

$$\left(\frac{KL}{r}\right)_y = \frac{0.5(8)(12)}{\frac{\sqrt{3}}{6}b} = \frac{166.28}{b}$$

Aluminum (2014 - T6 alloy) Column Formulas: Assume a *long* column and apply Eq. 13–26.

$$\sigma_{\text{allow}} = \frac{54\,000}{(KL/r)^2}$$

$$\frac{0.600}{5b^2} = \frac{54\,000}{\left(\frac{166.28}{b}\right)^2}$$

$$b = 0.4979 \text{ in.}$$

Here, $\frac{KL}{r} = \frac{166.28}{0.4979} = 334.0$. Since $\frac{KL}{r} > 55$, the assumption is correct.

Thus,

$$b = 0.498 \text{ in.} \qquad \textbf{Ans.}$$

13–93. The 2014-T6 aluminum column of 3-m length has the cross section shown. If the column is pinned at both ends and braced against the weak axis at its mid-height, determine the allowable axial force P that can be safely supported by the column.

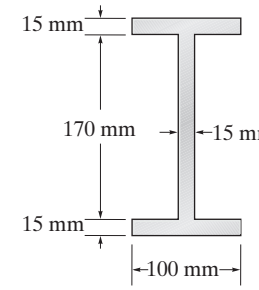

Section Properties.

$$A = 0.1(0.2) - 0.085(0.17) = 5.55\left(10^{-3}\right)\text{ m}^2$$

$$I_x = \frac{1}{12}(0.1)\left(0.2^3\right) - \frac{1}{12}(0.085)\left(0.17^3\right) = 31.86625\left(10^{-6}\right)\text{ m}^4$$

$$I_y = 2\left[\frac{1}{12}(0.015)\left(0.1^3\right)\right] + \frac{1}{12}(0.17)\left(0.015^3\right) = 2.5478\left(10^{-6}\right)\text{ m}^4$$

$$r_x = \sqrt{\frac{I_x}{A}} = \sqrt{\frac{31.86625\left(10^{-6}\right)}{5.55\left(10^{-3}\right)}} = 0.07577$$

$$r_y = \sqrt{\frac{I_y}{A}} = \sqrt{\frac{2.5478\left(10^{-6}\right)}{5.55\left(10^{-3}\right)}} = 0.02143\text{ m}$$

Slenderness Ratio. For a column pinned at both of its ends, $K = 1$. Here, $L_x = 3$ m and $L_y = 1.5$ m. Thus,

$$\left(\frac{KL}{r}\right)_x = \frac{(1)(3)}{0.07577} = 39.592$$

$$\left(\frac{KL}{r}\right)_y = \frac{(1)(1.5)}{0.02143} = 70.009\text{ (controls)}$$

2014-T6 Alumimum Alloy Column Formulas. Since $\left(\frac{KL}{r}\right)_y > 55$, the column can be classified as a long column,

$$\sigma_{\text{allow}} = \left[\frac{372.33\left(10^3\right)}{\left(\frac{KL}{r}\right)^2}\right]\text{MPa}$$

$$= \left[\frac{372.33\left(10^3\right)}{70.009^2}\right]\text{MPa}$$

$$= 75.966\text{ MPa}$$

Thus, the allowed force is

$$P_{\text{allow}} = \sigma_{\text{allow}}A = 75.966\left(10^6\right)\left[5.55\left(10^{-3}\right)\right] = 421.61\text{ kN} = 422\text{ kN} \qquad \textbf{Ans.}$$

Ans:
$P_{\text{allow}} = 422$ kN

13–94. The 2014-T6 aluminum column has the cross section shown. If the column is pinned at both ends and subjected to an axial force $P = 100$ kN, determine the maximum length the column can have to safely support the loading.

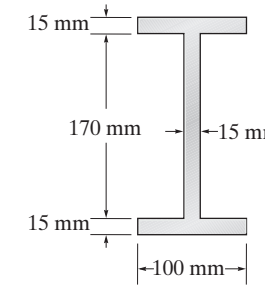

Section Properties.

$$A = 0.1(0.2) - 0.085(0.17) = 5.55\left(10^{-3}\right)\text{ m}^2$$

$$I_y = 2\left[\frac{1}{12}(0.015)\left(0.1^3\right)\right] + \frac{1}{12}(0.17)\left(0.015^3\right) = 2.5478\left(10^{-6}\right)\text{ m}^4$$

$$r_y = \sqrt{\frac{I_y}{A}} = \sqrt{\frac{2.5478\left(10^{-6}\right)}{5.55\left(10^{-3}\right)}} = 0.02143\text{ m}$$

Slenderness Ratio. For a column pinned at both of its ends, $K = 1$. Then,

$$\left(\frac{KL}{r}\right)_y = \frac{1(L)}{0.02143} = 46.6727L$$

2014-T6 Alumimum Alloy Column Formulas. Assuming a long column,

$$\sigma_{\text{allow}} = \left[\frac{372.33\left(10^3\right)}{\left(\frac{KL}{r}\right)^2}\right]\text{MPa}$$

$$\frac{100\left(10^3\right)}{5.55\left(10^{-3}\right)} = \left[\frac{372.33\left(10^3\right)}{(46.672L)^2}\right]\left(10^6\right)\text{ Pa}$$

$$L = 3.080\text{ m} = 3.08\text{ m}$$ **Ans.**

Since $\left(\frac{KL}{r}\right)_y = 46.6727(3.080) = 144 > 55$, the assumption is correct.

Ans:
$L = 3.08$ m

13–95. The tube is 0.5 in. thick, is made of aluminum alloy 2014-T6, and is fixed connected at its ends. Determine the largest axial load that it can support.

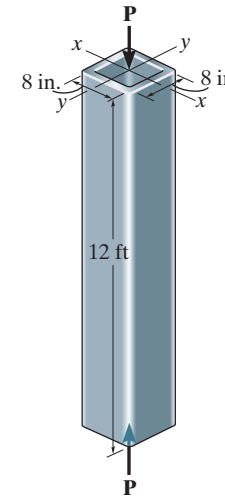

Section Properties:

$$A = (8)(8) - (7)(7) = 15 \text{ in}^2$$

$$I_x = I_y = \frac{1}{12}(8)(8^3) - \frac{1}{12}(7)(7^3) = 141.25 \text{ in}^4$$

$$r_x = r_y = \sqrt{\frac{I}{A}} = \sqrt{\frac{141.25}{15}} = 3.069 \text{ in.}$$

Allowable stress:

$$\frac{KL}{r} = \frac{0.5(12)(12)}{3.069} = 23.46, \; 12 < \frac{KL}{r} < 55$$

Intermediate column

$$\sigma_{\text{allow}} = 30.7 - 0.23\left(\frac{KL}{r}\right)$$

$$= 30.7 - 0.23(23.46) = 25.30 \text{ ksi}$$

$$P_{\text{allow}} = \sigma_{\text{allow}} A$$

$$= 25.30(15) = 380 \text{ kip}$$ **Ans.**

Ans:
$P_{\text{allow}} = 380$ kip

***13–96.** The tube is 0.5 in. thick, is made from aluminum alloy 2014-T6, and is fixed at its bottom and pinned at its top. Determine the largest axial load that it can support.

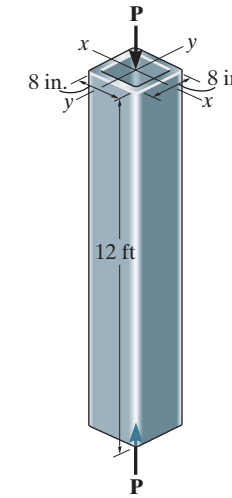

Section Properties:

$$A = (8)(8) - (7)(7) = 15 \text{ in}^2$$

$$I_x = I_y = \frac{1}{12}(8)(8^3) - \frac{1}{12}(7)(7^3) = 141.25 \text{ in}^4$$

$$r_x = r_y = \sqrt{\frac{I}{A}} = \sqrt{\frac{141.25}{15}} = 3.069 \text{ in.}$$

Allowable stress:

$$\frac{KL}{r} = \frac{0.7(12)(12)}{3.069} = 32.8446, \; 12 < \frac{KL}{r} < 55$$

Intermediate column

$$\sigma_{\text{allow}} = 30.7 - 0.23\left(\frac{KL}{r}\right) = 30.7 - 0.23(32.8446) = 23.15 \text{ ksi}$$

$$P_{\text{allow}} = \sigma_{\text{allow}} A = 23.15(15) = 347 \text{ kip}$$ **Ans.**

13–97. The tube is 0.25 in. thick, is made of a 2014-T6 aluminum alloy, and is fixed at its bottom and pinned at its top. Determine the largest axial load that it can support.

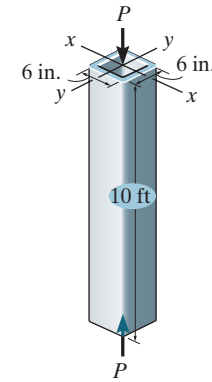

Section Properties:

$$A = 6(6) - 5.5(5.5) = 5.75 \text{ in}^2$$

$$I = \frac{1}{12}(6)\left(6^3\right) - \frac{1}{12}(5.5)\left(5.5^3\right) = 31.7448 \text{ in}^4$$

$$r = \sqrt{\frac{I}{A}} = \sqrt{\frac{31.7448}{5.75}} = 2.3496 \text{ in.}$$

Slenderness Ratio: For a column fixed at one end and pinned at the other end, $K = 0.7$. Thus,

$$\frac{KL}{r} = \frac{0.7(10)(12)}{2.3496} = 35.75$$

Aluminium (2014 – T6 alloy) Column Formulas: Since $12 < \frac{KL}{r} < 55$, the column is classified as an *intermediate* column. Applying Eq. 13–25,

$$\sigma_{\text{allow}} = \left[30.7 - 0.23\left(\frac{KL}{r}\right)\right] \text{ ksi}$$

$$= [30.7 - 0.23(35.75)]$$

$$= 22.477 = 22.48 \text{ ksi}$$

The allowable load is

$$P_{\text{allow}} = \sigma_{\text{allow}}A = 22.48(5.75) = 129 \text{ kip} \qquad \textbf{Ans.}$$

Ans:
$P_{\text{allow}} = 129$ kip

13–98. The tube is 0.25 in. thick, is made of a 2014-T6 aluminum alloy, and is fixed connected at its ends. Determine the largest axial load that it can support.

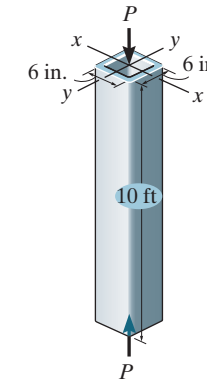

Section Properties:

$$A = 6(6) - 5.5(5.5) = 5.75 \text{ in}^2$$

$$I = \frac{1}{12}(6)\left(6^3\right) - \frac{1}{12}(5.5)\left(5.5^3\right) = 31.7448 \text{ in}^4$$

$$r = \sqrt{\frac{I}{A}} = \sqrt{\frac{31.7448}{5.75}} = 2.3496 \text{ in.}$$

Slenderness Ratio: For column fixed at both ends, $K = 0.5$. Thus,

$$\frac{KL}{r} = \frac{0.5(10)(12)}{2.3496} = 25.54$$

Aluminium (2014 – T6 alloy) Column Formulas: Since $12 < \frac{KL}{r} < 55$, the column is classified as an *intermediate* column. Applying Eq. 13–25,

$$\sigma_{\text{allow}} = \left[30.7 - 0.23\left(\frac{KL}{r}\right)\right] \text{ksi}$$

$$= [30.7 - 0.23(25.54)]$$

$$= 24.83 \text{ ksi}$$

The allowable load is

$$P_{\text{allow}} = \sigma_{\text{allow}} A = 24.83(5.75) = 143 \text{ kip} \qquad \textbf{Ans.}$$

Ans:
$P_{\text{allow}} = 143$ kip

13–99. The tube is 0.25 in. thick, is made of 2014-T6 aluminum alloy and is pin connected at its ends. Determine the largest axial load it can support.

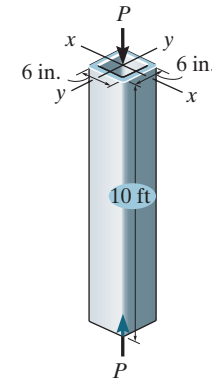

Section Properties:

$$A = 6(6) - 5.5(5.5) = 5.75 \text{ in}^2$$

$$I = \frac{1}{12}(6)\left(6^3\right) - \frac{1}{12}(5.5)\left(5.5^3\right) = 31.7448 \text{ in}^4$$

$$r = \sqrt{\frac{I}{A}} = \sqrt{\frac{31.7448}{5.75}} = 2.3496 \text{ in.}$$

Slenderness Ratio: For a column pinned as both ends, $K = 1$. Thus,

$$\frac{KL}{r} = \frac{1(10)(12)}{2.3496} = 51.07$$

Aluminum (2014 – T6 alloy) Column Formulas: Since $12 < \frac{KL}{r} < 55$, the column is classified as an *intermediate* column. Applying Eq. 13–25,

$$\sigma_{\text{allow}} = \left[30.7 - 0.23\left(\frac{KL}{r}\right)\right] \text{ ksi}$$

$$= [30.7 - 0.23(51.07)]$$

$$= 18.95 \text{ ksi}$$

The allowable load is

$$P_{\text{allow}} = \sigma_{\text{allow}} A = 18.95(5.75) = 109 \text{ kip} \qquad \textbf{Ans.}$$

Ans:
$P_{\text{allow}} = 109$ kip

***13–100.** A rectangular wooden column has the cross section shown. If the column is 6 ft long and subjected to an axial force of $P = 15$ kip, determine the required minimum dimension a of its cross-sectional area to the nearest $\frac{1}{16}$ in. so that the column can safely support the loading. The column is pinned at both ends.

Slenderness Ratio. For a column pinned at both of its ends, $K = 1$. Then,

$$\frac{KL}{d} = \frac{(1)(6)(12)}{a} = \frac{72}{a}$$

NFPA Timber Column Formula. Assuming an intermediate column,

$$\sigma_{\text{allow}} = 1.20\left[1 - \frac{1}{3}\left(\frac{KL/d}{26.0}\right)^2\right] \text{ ksi}$$

$$\frac{15}{2a(a)} = 1.20\left[1 - \frac{1}{3}\left(\frac{72/a}{26.0}\right)^2\right]$$

$$a = 2.968 \text{ in.}$$

Use $a = 3$ in. **Ans.**

$\frac{KL}{d} = \frac{72}{3} = 24$. Since $11 < \frac{KL}{d} < 26$, the assumption is correct.

13–101. A rectangular wooden column has the cross section shown. If $a = 3$ in. and the column is 12 ft long, determine the allowable axial force P that can be safely supported by the column if it is pinned at its top and fixed at its base.

Slenderness Ratio. For a column fixed at its base and pinned at its top $K = 0.7$. Then,

$$\frac{KL}{d} = \frac{0.7(12)(12)}{3} = 33.6$$

NFPA Timer Column Formula. Since $26 < \frac{KL}{d} < 50$, the column can be classified as a long column.

$$\sigma_{\text{allow}} = \frac{540 \text{ ksi}}{(KL/d)^2} = \frac{540}{33.6^2} = 0.4783 \text{ ksi}$$

The allowable force is

$$P_{\text{allow}} = \sigma_{\text{allow}} A = 0.4783(3)(6) = 8.61 \text{ kip} \qquad \textbf{Ans.}$$

Ans:
$P_{\text{allow}} = 8.61$ kip

13–102. A rectangular wooden column has the cross section shown. If $a = 3$ in. and the column is subjected to an axial force of $P = 15$ kip, determine the maximum length the column can have to safely support the load. The column is pinned at its top and fixed at its base.

Slenderness Ratio. For a column fixed at its base and pinned at its top, $K = 0.7$. Then,

$$\frac{KL}{d} = \frac{0.7L}{3} = 0.2333L$$

NFPA Timber Column Formula. Assuming an intermediate column,

$$\sigma_{\text{allow}} = 1.20\left[1 - \frac{1}{3}\left(\frac{KL/d}{26.0}\right)^2\right] \text{ ksi}$$

$$\frac{15}{3(6)} = 1.20\left[1 - \frac{1}{3}\left(\frac{0.2333L}{26.0}\right)^2\right]$$

$$L = 106.68 \text{ in.} = 8.89 \text{ ft} \qquad \textbf{Ans.}$$

Here, $\frac{KL}{d} = 0.2333(106.68) = 24.89$. Since $11 < \frac{KL}{d} < 26$, the assumption is correct.

Ans:
$L = 8.89$ ft

13–103. The timber column has a square cross section and is assumed to be pin connected at its top and bottom. If it supports an axial load of 50 kip, determine its smallest side dimension a to the nearest $\frac{1}{2}$ in. Use the NFPA formulas.

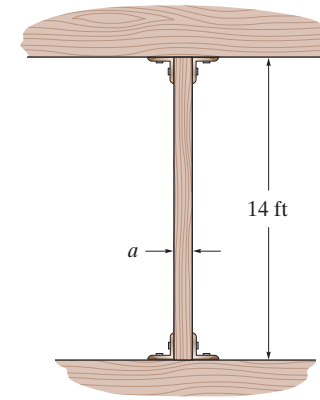

Section Properties:

$$A = a^2 \qquad \sigma_{\text{allow}} = \sigma = \frac{P}{A} = \frac{50}{a^2}$$

Assume long column:

$$\sigma_{\text{allow}} = \frac{540}{\left(\frac{KL}{d}\right)^2}$$

$$\frac{50}{a^2} = \frac{540}{\left[\frac{(1.0)(14)(12)}{a}\right]^2}$$

$a = 7.15$ in.

$$\frac{KL}{d} = \frac{(1.0)(14)(12)}{7.15} = 23.5, \frac{KL}{d} < 26 \qquad \text{Assumption NG}$$

Assume intermediate column:

$$\sigma_{\text{allow}} = 1.20\left[1 - \frac{1}{3}\left(\frac{KL/d}{26.0}\right)^2\right]$$

$$\frac{50}{a^2} = 1.20\left[1 - \frac{1}{3}\left(\frac{\frac{1.0(14)(12)}{a}}{26.0}\right)^2\right]$$

$a = 7.46$ in.

$$\frac{KL}{d} = \frac{1.0(14)(12)}{7.46} = 22.53, 11 < \frac{KL}{d} < 26 \qquad \text{Assumption O.K.}$$

Use $a = 7\frac{1}{2}$ in. **Ans.**

Ans:

Use $a = 7\frac{1}{2}$ in.

***13–104.** The bar is made of aluminum alloy 2014-T6. Determine its thickness b if its width is $1.5b$. Assume that it is fixed connected at its ends.

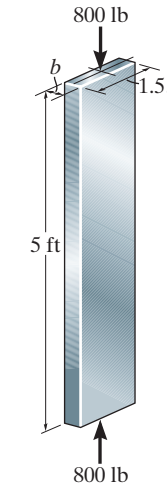

Section Properties:

$$A = 1.5\,b^2$$

$$I_y = \frac{1}{12}(1.5b)(b^3) = 0.125\,b^4$$

$$r_y = \sqrt{\frac{I_y}{A}} = \sqrt{\frac{0.125\,b^4}{1.5\,b^2}} = 0.2887\,b$$

$$\sigma_{\text{allow}} = \frac{P}{A} = \frac{0.8}{1.5\,b^2} = \frac{0.5333}{b^2}$$

Assume long column:

$$\sigma_{\text{allow}} = \frac{54\,000}{(KL/r)^2}$$

$$\frac{0.5333}{b^2} = \frac{54\,000}{\left[\frac{(0.5)(5)(12)}{0.2887\,b}\right]^2}$$

$$b = 0.571 \text{ in.}$$

$$r_y = 0.2887(0.571) = 0.1650 \text{ in.}$$

$$\frac{KL}{r_y} = \frac{(0.5)(12)(12)}{0.1650} = 181.8, \quad \frac{KL}{r_y} > 55 \qquad \text{Assumption OK}$$

Use $b = 0.571$ in. **Ans.**

13–105. The column is made of wood. It is fixed at its bottom and free at its top. Use the NFPA formulas to determine its greatest allowable length if it supports an axial load of $P = 6$ kip.

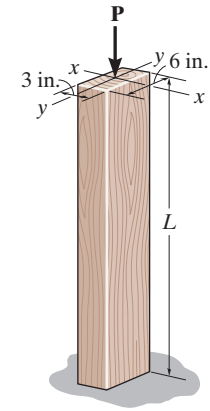

Assume long column:

$$\sigma_{\text{allow}} = \sigma = \frac{P}{A} = \frac{6}{6(3)} = 0.3333 \text{ ksi}$$

$$\sigma_{\text{allow}} = \frac{540}{(KL/d)^2} \qquad K = 2.0 \qquad d = 3 \text{ in.}$$

$$0.3333 = \frac{540}{[2.0(L)/3]^2}$$

$L = 60.37$ in. $= 5.03$ ft **Ans.**

Check:

$$\frac{KL}{d} = \frac{2.0(60.37)}{3} = 40.25, \qquad 26 < \frac{KL}{d} < 50 \qquad \text{Assumption } \textbf{OK}$$

Ans:
$L = 5.03$ ft

13–106. The column is made of wood. It is fixed at its bottom and free at its top. Use the NFPA formulas to determine the largest allowable axial load P that it can support if it has a length $L = 6$ ft.

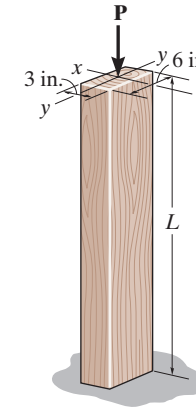

$K = 2.0 \quad L = 6(12) = 72 \text{ in.} \quad d = 3 \text{ in.}$

$$\frac{KL}{d} = \frac{2.0(72)}{3} = 48, \; 26 < \frac{KL}{d} < 50$$

Long column

$$\sigma_{\text{allow}} = \frac{540}{(KL/d)^2} = \frac{540}{(48)^2} = 0.2344 \text{ ksi}$$

$$P_{\text{allow}} = \sigma_{\text{allow}} A$$

$$= 0.2344(6)(3) = 4.22 \text{ kip}$$ **Ans.**

Ans:
$P_{\text{allow}} = 4.22$ kip

13–107. The W8 × 15 structural A992 steel column is assumed to be pinned at its top and bottom. Determine the largest eccentric load P that can be applied using Eq. 13–30 and the AISC equations of Sec. 13.6. The load at the top consists of a force P and a moment $M = P(8\text{ in.})$.

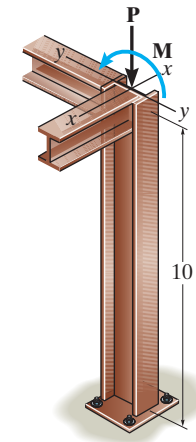

Section Properties: For a W8 × 15 wide flange section,

$$A = 4.44\text{ in}^2 \qquad d = 8.11\text{ in.} \qquad I_x = 48.0\text{ in}^4 \qquad r_y = 0.876\text{ in.}$$

$$r_x = 3.29\text{ in.}$$

Slenderness Ratio: By observation, the largest slenderness ratio is about y–y axis. For a column pinned at both ends, $K = 1$. Thus,

$$\left(\frac{KL}{r}\right)_y = \frac{1(10)(12)}{0.876} = 137.0$$

Allowable Stress: The allowable stress can be determined using *AISC Column Formulas.* For A992 steel, $\left(\frac{KL}{r}\right)_c = \sqrt{\frac{2\pi^2 E}{\sigma_r}} = \sqrt{\frac{2\pi^2[29(10^3)]}{50}} = 107$. Since $\left(\frac{KL}{r}\right)_c \leq \frac{KL}{r} \leq 200$, the column is a *long* column. Applying Eq. 13–21,

$$\sigma_{\text{allow}} = \frac{12\,\pi^2 E}{23(KL/r)^2}$$

$$= \frac{12\pi^2(29.0)(10^3)}{23(137.0^2)}$$

$$= 7.958\text{ ksi}$$

Maximum Stress: Bending is about x–x axis. Applying Eq. 13–30, we have

$$\sigma_{\max} = \sigma_{\text{allow}} = \frac{P}{A} + \frac{Mc}{I}$$

$$7.958 = \frac{P}{4.44} + \frac{P(8)\left(\frac{8.11}{2}\right)}{48}$$

$$P = 8.83\text{ kip} \qquad \textbf{Ans.}$$

Ans:
$P = 8.83$ kip

***13–108.** Solve Prob. 13–107 if the column is fixed at its top and bottom.

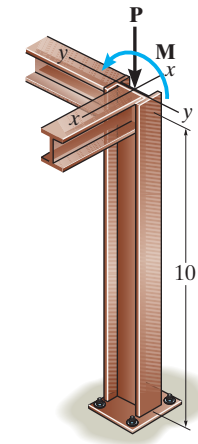

Section Properties: For a W8 × 15 wide flange section,

$$A = 4.44 \text{ in}^2 \quad d = 8.11 \text{ in.} \quad I_x = 48.0 \text{ in}^4 \quad r_x = 3.29 \text{ in.}$$

$$r_y = 0.876 \text{ in.}$$

Slenderness Ratio: By observation, the largest slenderness ratio is about y–y axis. For a column fixed at both ends, $K = 0.5$. Thus,

$$\left(\frac{KL}{r}\right)_y = \frac{0.5(10)(12)}{0.876} = 68.49$$

Allowable Stress: The allowable stress can be determined using *AISC Column Formulas.* For A992 steel, $\left(\frac{KL}{r}\right)_c = \sqrt{\frac{2\pi^2 E}{\sigma_r}} = \sqrt{\frac{2\pi^2[29(10^3)]}{50}} = 107$. Since $\frac{KL}{r} < \left(\frac{KL}{r}\right)_c$, the column is an *intermediate* column. Applying Eq. 13–23,

$$\sigma_{\text{allow}} = \frac{\left[1 - \frac{(KL/r)^2}{2(KL/r)_c^2}\right]\sigma_Y}{\frac{5}{3} + \frac{3(KL/r)}{8(KL/r)_c} - \frac{(KL/r)^3}{8(KL/r)_c^3}}$$

$$= \frac{\left[1 - \frac{(68.49^2)}{2(107^2)}\right](50)}{\frac{5}{3} + \frac{3(68.49)}{8(107)} - \frac{(68.49^3)}{8(107^3)}}$$

$$= 21.215 \text{ ksi}$$

Maximum Stress: Bending is about x–x axis. Applying Eq. 13–30, we have

$$\sigma_{\max} = \sigma_{\text{allow}} = \frac{P}{A} + \frac{Mc}{I}$$

$$21.215 = \frac{P}{4.44} + \frac{P(8)\left(\frac{8.11}{2}\right)}{48}$$

$$P = 23.5 \text{ kip} \qquad \textbf{Ans.}$$

13–109. Solve Prob. 13–107 if the column is fixed at its bottom and pinned at its top.

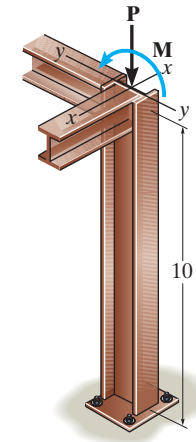

Section Properties: For a $W8 \times 15$ wide flange section,

$$A = 4.44 \text{ in}^2 \qquad d = 8.11 \text{ in.} \qquad I_x = 48.0 \text{ in}^4 \qquad r_x = 3.29 \text{ in.}$$

$$r_y = 0.876 \text{ in.}$$

Slenderness Ratio: By observation, the largest slenderness ratio is about y–y axis. For a column fixed at one end and pinned at the other, $K = 0.7$. Thus,

$$\left(\frac{KL}{r}\right)_y = \frac{0.7(10)(12)}{0.876} = 95.89$$

Allowable Stress: The allowable stress can be determined using *AISC Column Formulas*. For A–36 steel, $\left(\frac{KL}{r}\right)_y = \sqrt{\frac{2\pi^2 E}{\sigma_r}} = \sqrt{\frac{2\pi^2[29(10^3)]}{50}} = 107$. Since $\frac{KL}{r} < \left(\frac{KL}{r}\right)_y$. the column is a *intermediate* column. Applying Eq. 13–23,

$$\sigma_{\text{allow}} = \frac{\left[1 - \frac{(KL/r)^2}{2(KL/r)_c^2}\right]\sigma_Y}{\frac{5}{3} + \frac{3(KL/r)}{8(KL/r)_c} - \frac{(KL/r)^3}{8(KL/r)_c^3}}$$

$$= \frac{\left[1 - \frac{(95.89^2)}{2(126.1^2)}\right](50)}{\frac{5}{3} + \frac{3(95.89)}{8(126.1)} - \frac{(95.89^3)}{8(126.1^3)}}$$

$$= 15.643 \text{ ksi}$$

Maximum Stress: Bending is about x–x axis. Applying Eq. 13–30, we have

$$\sigma_{\max} = \sigma_{\text{allow}} = \frac{P}{A} + \frac{Mc}{I}$$

$$15.643 = \frac{P}{4.44} + \frac{P(8)\left(\frac{8.11}{2}\right)}{48}$$

$$P = 17.4 \text{ kip} \qquad \textbf{Ans.}$$

Ans:
$P = 17.4$ kip

13–110. The W10 × 19 structural A992 steel column is assumed to be pinned at its top and bottom. Determine the largest eccentric load P that can be applied using Eq. 13–30 and the AISC equations of Sec. 13.6.

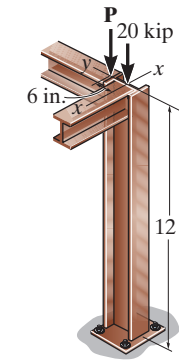

Section Properties for W10 × 19:

$$A = 5.62 \text{ in}^2 \qquad d = 10.24 \text{ in.} \qquad I_x = 96.3 \text{ in}^4$$

$$r_x = 4.14 \text{ in.} \qquad r_y = 0.874 \text{ in.}$$

$$\frac{KL}{r_y} = \frac{1.0(12)(12)}{0.874} = 164.76$$

$$\left(\frac{KL}{r}\right)_c = \sqrt{\frac{2\pi^2 E}{\sigma_Y}} = \sqrt{\frac{2\pi^2(29)(10^3)}{50}} = 107, \frac{KL}{r_y} > \left(\frac{KL}{r}\right)_c$$

$$(\sigma_a)_{\text{allow}} = \frac{12\pi^2 E}{23(KL/r)^2} = \frac{12\pi^2(29)(10^3)}{23(164.76)^2} = 5.501 \text{ ksi}$$

$$\sigma_{\max} = (\sigma_A)_{\text{allow}} = \frac{P}{A} + \frac{M_x c}{I_x}$$

$$5.501 = \frac{P + 20}{5.62} + \frac{P(6)\left(\frac{10.24}{2}\right)}{96.3}$$

$$P = 3.91 \text{ kip} \qquad \textbf{Ans.}$$

Ans:
$P = 3.91$ kip

13–111. The W8 × 15 structural A992 steel column is fixed at its top and bottom. If it supports end moments of $M = 5$ kip·ft, determine the axial force P that can be applied. Bending is about the x–x axis. Use the AISC equations of Sec. 13.6 and Eq. 13–30.

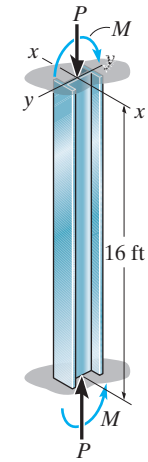

Section Properties for W8 × 15:

$$A = 4.44 \text{ in}^2 \qquad I_x = 48.0 \text{ in}^4 \qquad r_y = 0.876 \text{ in.} \qquad d = 8.11 \text{ in.}$$

$$\frac{KL}{r_y} = \frac{0.5(16)(12)}{0.876} = 109.59$$

$$\left(\frac{KL}{r}\right)_c = \sqrt{\frac{2\,\pi^2 E}{\sigma_Y}} = \sqrt{\frac{2\pi^2(29)(10^3)}{50}} = 107$$

$$\frac{KL}{r_y} > \left(\frac{KL}{r}\right)_c$$

$$\sigma_{\text{allow}} = \frac{12\pi^2 E}{23(KL/r)^2} = \frac{12\pi^2(29)(10^3)}{23(109.59)^2}$$

$$= 12.434 \text{ ksi}$$

$$\sigma_{\max} = \frac{P}{A} + \frac{Mc}{I} = \frac{P}{A} + \frac{Mc}{I}$$

$$12.434 = \frac{P}{4.44} + \frac{5(12)\left(\frac{8.11}{2}\right)}{48}$$

$$= 32.7 \text{ kip}$$ **Ans.**

Ans:
$P = 29.6$ kip

***13–112.** The W8 × 15 structural A992 steel column is fixed at its top and bottom. If it supports end moments of $M = 23$ kip·ft, determine the axial force P that can be applied. Bending is about the x–x axis. Use the interaction formula with $(\sigma_b) = 24$ ksi.

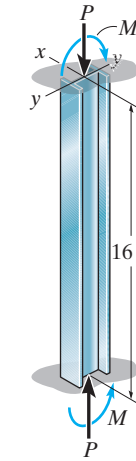

Section Properties for W8 × 15:

$$A = 4.44 \text{ in}^2 \qquad I_x = 48.0 \text{ in}^4 \qquad r_y = 0.876 \text{ in.} \qquad d = 8.11 \text{ in.}$$

Interaction Method:

$$\frac{KL}{r_y} = \frac{0.5(16)(12)}{0.876} = 109.59$$

$$\left(\frac{KL}{r}\right)_c = \sqrt{\frac{2\pi^2 E}{\sigma_Y}} = \sqrt{\frac{2\pi^2(29)(10^3)}{50}} = 107, \quad \frac{KL}{r_y} > \left(\frac{KL}{r}\right)_c$$

$$(\sigma_a)_{\text{allow}} = \frac{12\pi^2 E}{23(KL/r)^2} = \frac{12\pi^2(29)(10^3)}{23(109.59)^2}$$

$$= 12.434 \text{ ksi}$$

$$\sigma_a = \frac{P}{A} = \frac{P}{4.44} = 0.2252P$$

$$\sigma_b = \frac{Mc}{I} = \frac{23(12)\left(\frac{8.11}{2}\right)}{48} = 23.316$$

$$\frac{\sigma_a}{(\sigma_a)_{\text{allow}}} + \frac{\sigma_b}{(\sigma_b)_{\text{allow}}} = 1$$

$$\frac{0.2252P}{12.434} + \frac{23.316}{24} = 1$$

$P = 1.57$ kip **Ans.**

Note: $\dfrac{\sigma_a}{(\sigma_a)_{\text{allow}}} = \dfrac{0.2252(1.52)}{12.434} = 0.0284 < 0.15$

Therefore the method is allowed.

13–113. The A992-steel W10 × 45 column is fixed at its base. Its top is constrained so that it cannot move along the x–x axis but it is free to rotate about and move along the y–y axis. Determine the maximum eccentric force P that can be safely supported by the column using the allowable stress method.

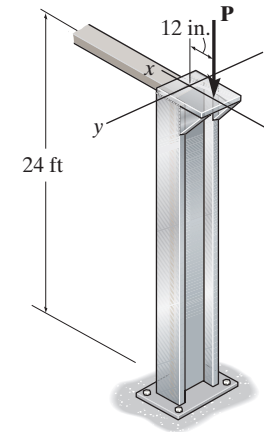

Section Properties. From the table listed in the appendix, the section properties for a W10 × 45 are

$A = 13.3 \text{ in}^2 \qquad b_f = 8.02 \text{ in.} \qquad r_x = 4.32 \text{ in.} \qquad I_y = 53.4 \text{ in}^4 \qquad r_y = 2.01 \text{ in.}$

Slenderness Ratio. Here, $L_x = 24(12) = 288$ in. and for a column fixed at its base and free at its top, $K_x = 2$. Thus,

$$\left(\frac{KL}{r}\right)_x = \frac{2(288)}{4.32} = 133.33 \text{ (controls)}$$

Since the column is fixed at its base and pinned at its top, $K_y = 0.7$ and $L_y = 24(12) = 288$ in. Then,

$$\left(\frac{KL}{r}\right)_y = \frac{0.7(288)}{2.01} = 100.30$$

Allowable Stress. The allowable stress will be determined using the AISC column formulas. For A992 steel,

$\left(\frac{KL}{r}\right)_c = \sqrt{\frac{2\pi^2 E}{\sigma_Y}} = \sqrt{\frac{2\pi^2\left[29\left(10^3\right)\right]}{50}} = 107.$ Since $\left(\frac{KL}{r}\right)_c < \left(\frac{KL}{r}\right)_x < 200,$ the column is classified as a long column.

$$\sigma_{\text{allow}} = \frac{12\pi^2 E}{23(KL/r)^2}$$

$$= \frac{12\pi^2\left[29\left(10^3\right)\right]}{23(133.33^2)} = 8.400 \text{ ksi}$$

Maximum Stress. Bending is about the weak axis. Since $M = P(12)$ and $c = \frac{b_f}{2} = \frac{8.02}{2} = 4.01$ in,

$$\sigma_{\text{allow}} = \frac{P}{A} + \frac{Mc}{I}$$

$$8.400 = \frac{P}{13.3} + \frac{[P(12)](4.01)}{53.4}$$

$$P = 8.604 \text{ kip} = 8.60 \text{ kip} \qquad \textbf{Ans.}$$

Ans:
$P = 8.60$ kip

13–114. The A992-steel W10 × 45 column is fixed at its base. Its top is constrained so that it cannot move along the x–x axis but it is free to rotate about and move along the y–y axis. Determine the maximum eccentric force P that can be safely supported by the column using an interaction formula. The allowable bending stress is $(\sigma_b)_{\text{allow}} = 15$ ksi.

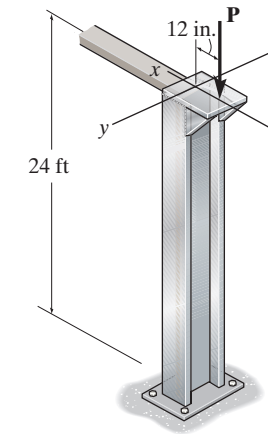

Section Properties. From the table listed in the appendix, the section properties for a W10 × 45 are

$A = 13.3 \text{ in}^2 \qquad b_f = 8.02 \text{ in.} \qquad r_x = 4.32 \text{ in.} \qquad I_y = 53.4 \text{ in}^4 \qquad r_y = 2.01 \text{ in.}$

Slenderness Ratio. Here, $L_x = 24(12) = 288$ in and for a column fixed at its base and free at its top, $K_x = 2$. Thus,

$$\left(\frac{KL}{r}\right)_x = \frac{2(288)}{4.32} = 133.33 \text{ (controls)}$$

Since the column is fixed at its base and pinned at its top, $K_y = 0.7$ and $L_y = 24(12) = 288$ in. Then,

$$\left(\frac{KL}{r}\right)_y = \frac{0.7(288)}{2.01} = 100.30$$

Allowable Stress. The allowable stress will be determined using the AISC column formulas. For A992 steel, $\left(\frac{KL}{r}\right)_c = \sqrt{\frac{2\pi^2 E}{\sigma_Y}} = \sqrt{\frac{2\pi^2\left[29\left(10^3\right)\right]}{50}} = 107$. Since $\left(\frac{KL}{r}\right)_c < \left(\frac{KL}{r}\right)_x < 200$, the column is classified as a long column.

$$\sigma_{\text{allow}} = \frac{12\pi^2 E}{23(KL/r)^2}$$

$$= \frac{12\pi^2\left[29\left(10^3\right)\right]}{23\left(133.33^2\right)} = 8.400 \text{ ksi}$$

Interaction Formula. Bending is about the weak axis. Here, $M = P(12)$ and $c = \frac{b_f}{2} = \frac{8.02}{2} = 4.01$ in.

$$\frac{P/A}{(\sigma_a)_{\text{allow}}} + \frac{Mc/Ar^2}{(\sigma_b)_{\text{allow}}} = 1$$

$$\frac{P/13.3}{8.400} + \frac{P(12)(4.01)\Big/\left[13.3\left(2.01^2\right)\right]}{15} = 1$$

$P = 14.57 \text{ kip} = 14.6 \text{ kip}$ **Ans.**

$$\frac{\sigma_a}{(\sigma_a)_{\text{allow}}} = \frac{14.57/13.3}{8.400} = 0.1304 < 0.15 \qquad \text{O.K.}$$

Ans:
$P = 14.6$ kip

13–115. The A-36-steel W12 × 50 column is fixed at its base. Its top is constrained so that it cannot move along the x–x axis but it is free to rotate about and move along the y–y axis. If the eccentric force $P = 15$ kip is applied to the column, investigate if the column is adequate to support the loading. Use the allowable stress method.

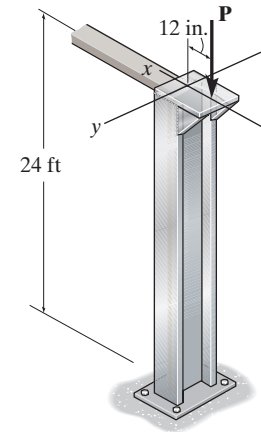

Section Properties. From the table listed in the appendix, the section properties for a W12 × 50 are

$A = 14.7 \text{ in}^2 \qquad b_f = 8.08 \text{ in.} \qquad r_x = 5.18 \text{ in.} \qquad I_y = 56.3 \text{ in}^4$

$r_y = 1.96$ in.

Slenderness Ratio. Here, $L_x = 24(12) = 288$ in. and for a column fixed at its base and free at its top, $K_x = 2$. Thus,

$$\left(\frac{KL}{r}\right)_x = \frac{2(288)}{5.18} = 111.20 \text{ (controls)}$$

Since the column is fixed at its base and pinned at its top, $K_y = 0.7$ and $L_y = 24(12) = 288$ in. Thus,

$$\left(\frac{KL}{r}\right)_y = \frac{0.7(288)}{1.96} = 102.86$$

Allowable Stress. The allowable stress will be determined using the AISC column formulas. For A-36 steel, $\left(\frac{KL}{r}\right)_c = \sqrt{\frac{2\pi^2 E}{\sigma_Y}} = \sqrt{\frac{2\pi^2\left[29\left(10^3\right)\right]}{36}} = 126.10$. Since $\left(\frac{KL}{r}\right)_x < \left(\frac{KL}{r}\right)_c$, the column can be classified as an intermediate column.

$$\sigma_{\text{allow}} = \frac{\left[1 - \frac{(KL/r)^2}{2(KL/r)_C{}^2}\right]\sigma_Y}{\frac{5}{3} + \frac{3(KL/r)}{8(KL/r)_C} - \frac{(KL/r)^3}{8(KL/r)_C{}^3}}$$

$$= \frac{\left[1 - \frac{111.20^2}{2\left(126.10^2\right)}\right](36)}{\frac{5}{3} + \frac{3(111.20)}{8(126.10)} - \frac{111.20^3}{8\left(126.10^3\right)}}$$

$$= 11.51 \text{ ksi}$$

Maximum Stress. Bending is about the weak axis. Since, $M = 15(12) = 180$ kip · in. and $c = \frac{b_f}{2} = \frac{8.08}{2} = 4.04$ in.,

$$\sigma_{\max} = \frac{P}{A} + \frac{Mc}{I} = \frac{15}{14.7} + \frac{180(4.04)}{56.3} = 13.94 \text{ ksi}$$

Since $\sigma_{\max} > \sigma_{\text{allow}}$, the W12 × 50 column *is inadequate* according to the allowable stress method.

Ans:
No.

***13–116.** The A-36-steel W12 × 50 column is fixed at its base. Its top is constrained so that it cannot move along the x–x axis but it is free to rotate about and move along the y–y axis. If the eccentric force $P = 15$ kip is applied to the column, investigate if the column is adequate to support the loading. Use the interaction formula. The allowable bending stress is $(\sigma_b)_{\text{allow}} = 15$ ksi.

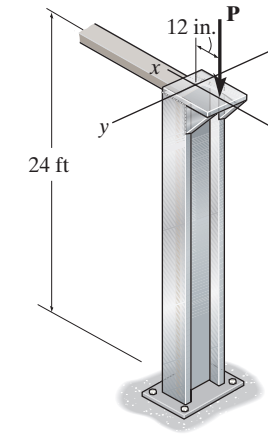

Section Properties. From the table listed in the appendix, the section properties for a W12 × 50 are

$A = 14.7 \text{ in}^2 \qquad b_f = 8.08 \text{ in.} \qquad r_x = 5.18 \text{ in.} \qquad r_y = 1.96 \text{ in.}$

Slenderness Ratio. Here, $L_x = 24(12) = 288$ in. and for a column fixed at its base and free its top, $K_x = 2$. Thus,

$$\left(\frac{KL}{r}\right)_x = \frac{2(288)}{5.18} = 111.20 \text{ (controls)}$$

Since the column is fixed at its base and pinned at its top, $K_y = 0.7$ and $L_y = 24(12) = 288$ in. Then,

$$\left(\frac{KL}{r}\right)_y = \frac{0.7(288)}{1.96} = 102.86$$

Allowable Axial Stress. For A-36 steel, $\left(\frac{KL}{r}\right)_c = \sqrt{\frac{2\pi^2 E}{\sigma_Y}}$ $= \sqrt{\frac{2\pi^2\left[29\left(10^3\right)\right]}{36}} = 126.10$. Since $\left(\frac{KL}{r}\right)_x < \left(\frac{KL}{r}\right)_c$, the column can be classified as an intermediate column.

$$\sigma_{\text{allow}} = \frac{\left[1 - \frac{(KL/r)^2}{2(KL/r)_c{}^2}\right]\sigma_Y}{\frac{5}{3} + \frac{3(KL/r)}{8(KL/r)_c} - \frac{(KL/r)^3}{8(KL/r)_c{}^3}}$$

$$= \frac{\left[1 - \frac{111.20^2}{2\left(126.10^2\right)}\right](36)}{\frac{5}{3} + \frac{3(111.20)}{8(126.10)} - \frac{111.20^3}{8\left(126.10^3\right)}}$$

$$= 11.51 \text{ ksi}$$

Interaction Formula. Bending is about the weak axis. Here, $M = 15(12) = 180$ kip · in. and $c = \frac{b_f}{2} = \frac{8.08}{2} = 4.04$ in.

$$\frac{P/A}{(\sigma_a)_{\text{allow}}} + \frac{Mc/Ar^2}{(\sigma_b)_{\text{allow}}} = \frac{15/14.7}{11.51} + \frac{180(4.04)\Big/\left[14.7\left(1.96^2\right)\right]}{15} = 0.9471 < 1$$

$$\frac{\sigma_a}{(\sigma_a)_{\text{allow}}} = \frac{15/14.7}{11.51} = 0.089 < 0.15 \qquad \text{O.K.}$$

Thus, a W12 × 50 column *is adequate* according to the interaction formula.

13–117. A 16-ft-long column is made of aluminum alloy 2014-T6. If it is fixed at its top and bottom, and a concentric load **P** and a moment $M = P(4.5\text{ in.})$ are applied at point A, determine the maximum allowable magnitude of **P** using the equations of Sec. 13.6 and Eq. 13–30.

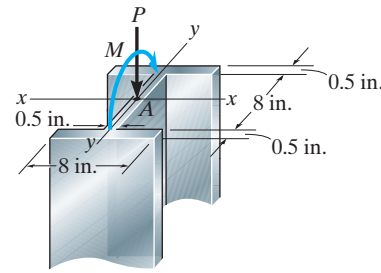

Section Properties:

$$A = 2(0.5)(8) + 8(0.5) = 12\text{ in}^2$$

$$I_x = \frac{1}{12}(8)(9^3) - \frac{1}{12}(7.5)(8^3) = 166\text{ in}^4$$

$$I_y = 2\left(\frac{1}{12}\right)(0.5)(8^3) + \frac{1}{12}(8)(0.5^3) = 42.75\text{ in}^4$$

$$r_y = \sqrt{\frac{I_y}{A}} = \sqrt{\frac{42.75}{12}} = 1.8875\text{ in.}$$

Allowable Stress Method:

$$\frac{KL}{r_y} = \frac{0.5(16)(12)}{1.8875} = 50.86,\ 12 < \frac{KL}{r_y} < 55$$

$$\sigma_{\text{allow}} = \left[30.7 - 0.23\left(\frac{KL}{r}\right)\right]$$

$$= [30.7 - 0.23(50.86)] = 19.00\text{ ksi}$$

$$\sigma_{\max} = \sigma_{\text{allow}} = \frac{P}{A} + \frac{M_x c}{I_x}$$

$$19.00 = \frac{P}{12} + \frac{P(4.25)(4.5)}{166}$$

$$P = 95.7\text{ kip}$$ **Ans.**

Ans:
$P = 95.7$ kip

13–118. A 16-ft-long column is made of aluminum alloy 2014-T6. If it is fixed at its top and bottom, and a concentric load **P** and a moment $M = P(4.5\text{ in.})$ are applied at point A, determine the maximum allowable magnitude of **P** using the equations of Sec. 13.6 and the interaction formula with $(\sigma_b)_{\text{allow}} = 20$ ksi.

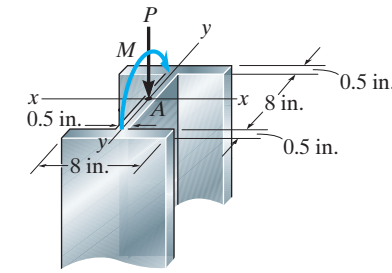

Section Properties:

$$A = 2(0.5)(8) + 8(0.5) = 12\text{ in}^2$$

$$I_x = \frac{1}{12}(8)(9^3) - \frac{1}{12}(7.5)(8^3) = 166\text{ in}^4$$

$$I_y = 2\left(\frac{1}{12}\right)(0.5)(8^3) + \frac{1}{12}(8)(0.5^3) = 42.75\text{ in}^4$$

$$r_y = \sqrt{\frac{I_y}{A}} = \sqrt{\frac{42.75}{12}} = 1.8875\text{ in.}$$

Interaction Method:

$$\frac{KL}{r_y} = \frac{0.5(16)(12)}{1.8875} = 50.86,\ 12 < \frac{KL}{r_y} < 55$$

$$\sigma_{\text{allow}} = \left[30.7 - 0.23\left(\frac{KL}{r}\right)\right]$$

$$= [30.7 - 0.23(50.86)]$$

$$= 19.00\text{ ksi}$$

$$\sigma_a = \frac{P}{A} = \frac{P}{12} = 0.08333P$$

$$\sigma_b = \frac{Mc}{I_x} = \frac{P(4.25)(4.50)}{166} = 0.1152P$$

$$\frac{\sigma_a}{(\sigma_a)_{\text{allow}}} + \frac{\sigma_b}{(\sigma_b)_{\text{allow}}} = 1.0$$

$$\frac{0.08333P}{19.00} + \frac{0.1152P}{20} = 1$$

$P = 98.6$ kip **Ans.**

Ans:
$P = 98.6$ kip

13–119. The 2014-T6 aluminum hollow column is fixed at its base and free at its top. Determine the maximum eccentric force P that can be safely supported by the column. Use the allowable stress method. The thickness of the wall for the section is $t = 0.5$ in.

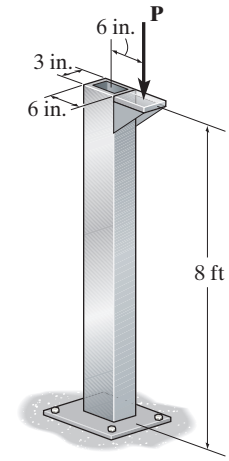

Section Properties.

$A = 6(3) - 5(2) = 8 \text{ in}^2$

$$I_x = \frac{1}{12}(3)\left(6^3\right) - \frac{1}{12}(2)\left(5^3\right) = 33.1667 \text{ in}^4 \qquad r_x = \sqrt{\frac{I_x}{A}} = \sqrt{\frac{33.1667}{8}} = 2.036 \text{ in.}$$

$$I_y = \frac{1}{12}(6)\left(3^3\right) - \frac{1}{12}(5)\left(2^3\right) = 10.1667 \text{ in}^4 \qquad r_y = \sqrt{\frac{I_y}{A}} = \sqrt{\frac{10.1667}{8}} = 1.127 \text{ in.}$$

Slenderness Ratio. For a column fixed at its base and free at its top, $K = 2$. Thus,

$$\left(\frac{KL}{r}\right)_y = \frac{2(8)(12)}{1.127} = 170.32$$

Allowable Stress. Since $\left(\frac{KL}{r}\right)_y > 55$, the column can be classified as a long column.

$$\sigma_{\text{allow}} = \frac{54\,000 \text{ ksi}}{(KL/r)^2} = \frac{54\,000 \text{ ksi}}{170.32^2} = 1.862 \text{ ksi}$$

Maximum Stress. Bending occurs about the strong axis so that $M = P(6)$ and $c = \frac{6}{2} = 3$ in.

$$\sigma_{\text{allow}} = \frac{P}{A} + \frac{Mc}{I}$$

$$1.862 = \frac{P}{8} + \frac{\left[P(6)\right](3)}{33.1667}$$

$$P = 2.788 \text{ kip} = 2.79 \text{ kip} \qquad \textbf{Ans.}$$

Ans:
$P = 2.79$ kip

***13–120.** The 2014-T6 aluminum hollow column is fixed at its base and free at its top. Determine the maximum eccentric force P that can be safely supported by the column. Use the interaction formula. The allowable bending stress is $(\sigma_b)_{\text{allow}} = 30$ ksi. The thickness of the wall for the section is $t = 0.5$ in.

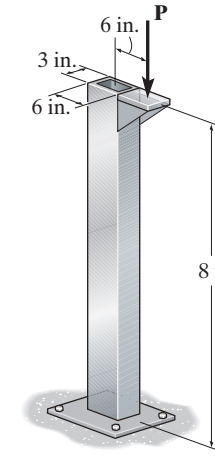

Section Properties.

$A = 6(3) - 5(2) = 8 \text{ in}^2$

$$I_x = \frac{1}{12}(3)\left(6^3\right) - \frac{1}{12}(2)\left(5^3\right) = 33.1667 \text{ in}^4 \qquad r_x = \sqrt{\frac{I_x}{A}} = \sqrt{\frac{33.1667}{8}} = 2.036 \text{ in.}$$

$$I_y = \frac{1}{12}(6)\left(3^3\right) - \frac{1}{12}(5)\left(2^3\right) = 10.1667 \text{ in}^4 \qquad r_y = \sqrt{\frac{I_y}{A}} = \sqrt{\frac{10.1667}{8}} = 1.127 \text{ in.}$$

Slenderness Ratio. For a column fixed at its base and pinned at its top, $K = 2$. Thus,

$$\left(\frac{KL}{r}\right)_y = \frac{2(8)(12)}{1.127} = 170.32$$

Allowable Stress. Since $\left(\frac{KL}{r}\right)_y > 55$, the column can be classified as the column is classified as a long column.

$$\sigma_{\text{allow}} = \frac{54000 \text{ ksi}}{(KL/r)^2} = \frac{54000 \text{ ksi}}{170.32^2} = 1.862 \text{ ksi}$$

Interaction Formula. Bending is about the strong axis. Since $M = P(6)$ and $c = \frac{6}{2} = 3$ in,

$$\frac{P/A}{(\sigma_a)_{\text{allow}}} + \frac{Mc/Ar^2}{(\sigma_b)_{\text{allow}}} = 1$$

$$\frac{P/8}{1.862} + \frac{[P(6)](3) \Big/ \left[8\left(2.036^2\right)\right]}{30} = 1$$

$P = 11.73 \text{ kip} = 11.7 \text{ kip}$ **Ans.**

13–121. The 10-ft-long bar is made of aluminum alloy 2014-T6. If it is fixed at its bottom and pinned at the top, determine the maximum allowable eccentric load **P** that can be applied using the formulas in Sec. 13.6 and Eq. 13–30.

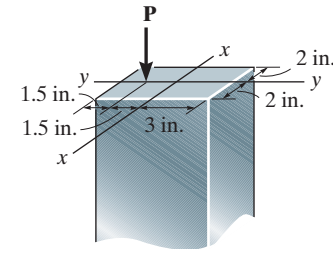

Section Properties:

$$A = 6(4) = 24.0 \text{ in}^2$$

$$I_x = \frac{1}{12}(4)\left(6^3\right) = 72.0 \text{ in}^4$$

$$I_y = \frac{1}{12}(6)\left(4^3\right) = 32.0 \text{ in}^4$$

$$r_y = \sqrt{\frac{I_y}{A}} = \sqrt{\frac{32.0}{24}} = 1.155 \text{ in.}$$

Slenderness Ratio: The largest slenderness ratio is about $y-y$ axis. For a column pinned at one end and fixed at the other end, $K = 0.7$. Thus,

$$\left(\frac{KL}{r}\right)_y = \frac{0.7(10)(12)}{1.155} = 72.75$$

Allowable Stress: The allowable stress can be determined using aluminum (2014 –T6 alloy) column formulas. Since $\frac{KL}{r} > 55$, the column is classified as a *long* column. Applying Eq. 13–26,

$$\sigma_{\text{allow}} = \left[\frac{54\,000}{(KL/r)^2}\right] \text{ksi}$$

$$= \frac{54\,000}{72.75^2}$$

$$= 10.204 \text{ ksi}$$

Maximum Stress: Bending is about $x-x$ axis. Applying Eq. 13–30, we have

$$\sigma_{\max} = \sigma_{\text{allow}} = \frac{P}{A} + \frac{Mc}{I}$$

$$10.204 = \frac{P}{24.0} + \frac{P(1.5)(3)}{72.0}$$

$$P = 98.0 \text{ kip}$$ **Ans.**

Ans:
$P = 98.0$ kip

13–122. The 10-ft-long bar is made of aluminum alloy 2014-T6. If it is fixed at its bottom and pinned at the top, determine the maximum allowable eccentric load **P** that can be applied using the equations of Sec. 13.6 and the interaction formula with $(\sigma_b)_{\text{allow}} = 18$ ksi.

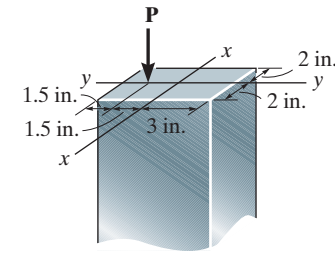

Section Properties:

$$A = 6(4) = 24.0 \text{ in}^2$$

$$I_x = \frac{1}{12}(4)\left(6^3\right) = 72.0 \text{ in}^4$$

$$I_y = \frac{1}{12}(6)\left(4^3\right) = 32.0 \text{ in}^4$$

$$r_x = \sqrt{\frac{I_x}{A}} = \sqrt{\frac{72.0}{24.0}} = 1.732 \text{ in.}$$

$$r_y = \sqrt{\frac{I_y}{A}} = \sqrt{\frac{32.0}{24.0}} = 1.155 \text{ in.}$$

Slenderness Ratio: The largest slenderness ratio is about $y-y$ axis. For a column pinned at one end and fixed at the other end, $K = 0.7$. Thus

$$\left(\frac{KL}{r}\right)_y = \frac{0.7(10)(12)}{1.155} = 72.75$$

Allowable Stress: The allowable stress can be determined using *aluminum (2014–T6 alloy) column formulas.* Since $\frac{KL}{r} > 55$, the column is classified as a *long* column. Applying Eq. 13–26,

$$(\sigma_a)_{\text{allow}} = \left[\frac{54\,000}{(KL/r)^2}\right] \text{ksi}$$

$$= \frac{54\,000}{72.75^2}$$

$$= 10.204 \text{ ksi}$$

Interaction Formula: Bending is about $x-x$ axis. Applying Eq. 13–31, we have

$$\frac{P/A}{(\sigma_a)_{\text{allow}}} + \frac{Mc/Ar^2}{(\sigma_b)_{\text{allow}}} = 1$$

$$\frac{P/24.0}{10.204} + \frac{P(1.5)(3)/24.0(1.732^2)}{18} = 1$$

$$P = 132 \text{ kip}$$ **Ans.**

Ans:
$P = 132$ kip

13–123. Determine if the column can support the eccentric compressive load of 1.5 kip. Assume that the ends are pin connected. Use the NFPA equations in Sec. 13.6 and Eq. 13–30.

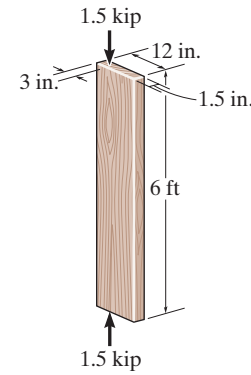

$A = 12\,(1.5) = 18\text{ in}^2; \qquad I_x = \frac{1}{12}(1.5)(12)^3 = 216\text{ in}^4$

$d = 1.5\text{ in.}$

$$\frac{KL}{d} = \frac{1.0(6)(12)}{1.5} = 48$$

$$26 < \frac{KL}{d} < 50$$

$$(\sigma_a)_{\text{allow}} = \frac{540}{\left(\frac{KL}{d}\right)^2} = \frac{540}{(48)^2} = 0.2344$$

$$\sigma_{\max} = \frac{P}{A} + \frac{M_x c}{I_x}$$

$$= \frac{1.5}{18} + \frac{1.5(3)(6)}{216} = 0.208\text{ ksi}$$

$(\sigma_a)_{\text{allow}} > \sigma_{\max}$

The column is adequate.

Yes. **Ans.**

Ans:
Yes.

***13–124.** Determine if the column can support the eccentric compressive load of 1.5 kip. Assume that the bottom is fixed and the top is pinned. Use the NFPA equations in Sec. 13.6 and Eq. 13–30.

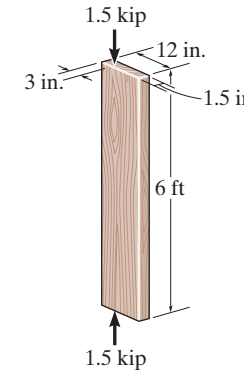

$A = 12\,(1.5) = 18\text{ in}^2; \qquad I_x = \frac{1}{12}(1.5)(12)^3 = 216\text{ in}^4$

$d = 1.5\text{ in.}$

$$\frac{KL}{d} = \frac{0.7\,(6)(12)}{1.5} = 33.6$$

$$26 < \frac{KL}{d} < 50$$

$$(\sigma_a)_{\text{allow}} = \frac{540}{\left(\frac{KL}{d}\right)^2} = \frac{540}{(33.6)^2} = 0.4783$$

$$\sigma_{\max} = \frac{P}{A} + \frac{M_x c}{I_x} = \frac{1.5}{18} + \frac{1.5(3)(6)}{216} = 0.208\text{ ksi}$$

$(\sigma_a)_{\text{allow}} > \sigma_{\max}$

The column is adequate.

Yes. **Ans.**

13–125. The 10-in.-diameter utility pole supports the transformer that has a weight of 600 lb and center of gravity at G. If the pole is fixed to the ground and free at its top, determine if it is adequate according to the NFPA equations of Sec. 13.6 and Eq. 13–30.

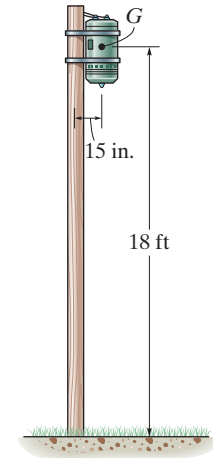

$$\frac{KL}{d} = \frac{2(18)(12)}{10} = 43.2 \text{ in.}$$

$$26 < 43.2 \leq 50$$

Use Eq. 13–29,

$$\sigma_{\text{allow}} = \frac{540}{(KL/d)} = \frac{540}{(43.2)^2} = 0.2894 \text{ ksi}$$

$$\sigma_{\max} = \frac{P}{A} + \frac{Mc}{I}$$

$$\sigma_{\max} = \frac{600}{\pi\,(5)^2} + \frac{(600)(15)(5)}{\left(\frac{\pi}{4}\right)(5)^4}$$

$\sigma_{\max} = 99.31 \text{ psi} < 0.289 \text{ ksi}$ O.K.

Yes. **Ans.**

Ans:
Yes.

13–126. Using the NFPA equations of Sec. 13–6 and Eq. 13–30, determine the maximum allowable eccentric load P that can be applied to the wood column. Assume that the column is pinned at both its top and bottom.

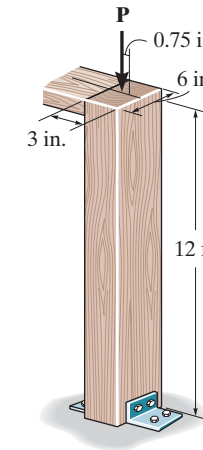

Section Properties:

$$A = 6(3) = 18.0 \text{ in}^2$$

$$I_y = \frac{1}{12}(6)\left(3^3\right) = 13.5 \text{ in}^4$$

Slenderness Ratio: For a column pinned at both ends, $K = 1.0$. Thus,

$$\left(\frac{KL}{d}\right)_y = \frac{1.0(12)(12)}{3} = 48.0$$

Allowable Stress: The allowable stress can be determined using *NFPA timber column formulas.* Since $26 < \frac{KL}{d} < 50$, it is a *long* column. Applying Eq. 13–29,

$$\sigma_{\text{allow}} = \frac{540}{(KL/d)^2} \text{ ksi}$$

$$= \frac{540}{48.0^2} = 0.234375 \text{ ksi}$$

Maximum Stress: Bending is about $y-y$ axis. Applying Eq. 13–30, we have

$$\sigma_{\max} = \sigma_{\text{allow}} = \frac{P}{A} + \frac{Mc}{I}$$

$$0.234375 = \frac{P}{18.0} + \frac{P(0.75)(1.5)}{13.5}$$

$$P = 1.69 \text{ kip}$$ **Ans.**

Ans:
$P = 1.69$ kip

13–127. Using the NFPA equations of Sec. 13.6 and Eq. 13–30, determine the maximum allowable eccentric load P that can be applied to the wood column. Assume that the column is pinned at the top and fixed at the bottom.

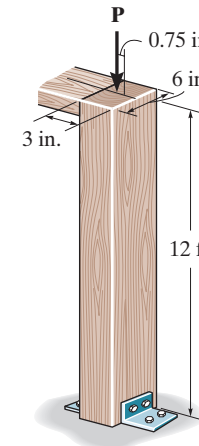

Section Properties:

$$A = 6(3) = 18.0 \text{ in}^2$$

$$I_y = \frac{1}{12}(6)\left(3^3\right) = 13.5 \text{ in}^4$$

Slenderness Ratio: For a column pinned at one end and fixed at the other end, $K = 0.7$. Thus,

$$\left(\frac{KL}{d}\right)_y = \frac{0.7(12)(12)}{3} = 33.6$$

Allowable Stress: The allowable stress can be determined using *NFPA timber column formulas*. Since $26 < \frac{KL}{d} < 50$, it is a *long* column. Applying Eq. 13–29,

$$\sigma_{\text{allow}} = \frac{540}{(KL/d)^2} \text{ ksi}$$

$$= \frac{540}{33.6^2} = 0.4783 \text{ ksi}$$

Maximum Stress: Bending is about $y-y$ axis. Applying Eq. 13–30, we have

$$\sigma_{\max} = \sigma_{\text{allow}} = \frac{P}{A} + \frac{Mc}{I}$$

$$0.4783 = \frac{P}{18.0} + \frac{P(0.75)(1.5)}{13.5}$$

$$P = 3.44 \text{ kip}$$ **Ans.**

Ans:
$P = 3.44$ kip

***13–128.** The wood column has a thickness of 4 in. and a width of 6 in. Using the NFPA equations of Sec. 13.6 and Eq. 13–30, determine the maximum allowable eccentric load P that can be applied. Assume that the column is pinned at both its top and bottom.

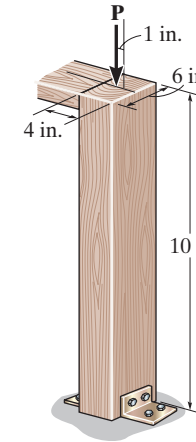

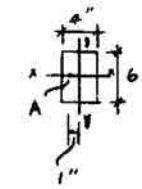

Section properties:

$$A = 6(4) = 24 \text{ in}^2 \qquad I_y = \frac{1}{12}(6)(4^3) = 32 \text{ in}^4$$

$$d = 4 \text{ in.}$$

Allowable Stress Method:

$$\frac{KL}{d} = \frac{1.0(10)(12)}{4} = 30 \text{ in.}$$

$$26 < \frac{KL}{d} < 50$$

$$(\sigma_a)_{\text{allow}} = \frac{540}{(KL/d)^2} = \frac{540}{30^2} = 0.6 \text{ ksi}$$

$$\sigma_{\max} = (\sigma_a)_{\text{allow}} = \frac{P}{A} + \frac{M_y c}{I_y}$$

$$0.6 = \frac{P}{24} + \frac{P(1)(2)}{32}$$

$$P = 5.76 \text{ kip}$$ **Ans.**

13–129. The wood column has a thickness of 4 in. and a width of 6 in. Using the NFPA equations of Sec. 13.6 and Eq. 13–30, determine the maximum allowable eccentric load P that can be applied. Assume that the column is pinned at the top and fixed at the bottom.

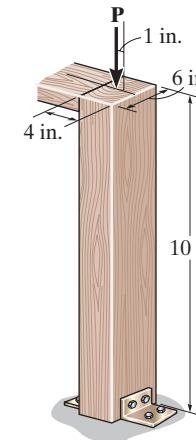

Section Properties:

$$A = 6(4) = 24 \text{ in}^2 \qquad I_y = \frac{1}{12}(6)(4^3) = 32 \text{ in}^4$$

$$d = 4 \text{ in.}$$

Allowable Stress Method:

$$\frac{KL}{d} = \frac{0.7(10)(12)}{4} = 21$$

$$11 < \frac{KL}{d} < 26$$

$$(\sigma_a)_{\text{allow}} = 1.20\left[1 - \frac{1}{3}\left(\frac{KL/d}{26}\right)^2\right] = 1.20\left[1 - \frac{1}{3}\left(\frac{21}{26}\right)^2\right] = 0.9391 \text{ ksi}$$

$$\sigma_{\max} = (\sigma_a)_{\text{allow}} = \frac{P}{A} + \frac{M_y c}{I_y}$$

$$0.9391 = \frac{P}{24} + \frac{P(1)(2)}{32}$$

$$P = 9.01 \text{ kip}$$ **Ans.**

Ans:
$P = 9.01$ kip

13–130. A steel column has a length of 5 m and is free at one end and fixed at the other end. If the cross-sectional area has the dimensions shown, determine the critical load. $E_{st} = 200$ GPa, $\sigma_Y = 360$ MPa.

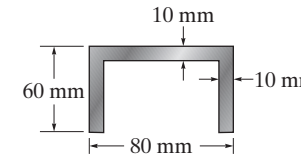

Section Properties:

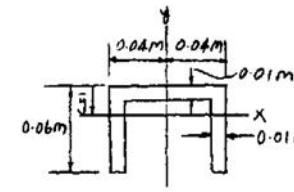

$$A = 0.06\,(0.01) + 2\,(0.06)(0.01) = 1.80(10^{-3})\ \text{m}^2$$

$$\bar{y} = \frac{\Sigma \bar{y} A}{\Sigma A} = \frac{0.005\,(0.06)(0.01) + 2[0.03\,(0.06)(0.01)]}{0.06\,(0.01) + 2\,(0.06)(0.01)} = 0.02167\ \text{m}$$

$$I_x = \frac{1}{12}(0.06)(0.01)^3 + 0.06\,(0.01)(0.02167 - 0.005)^2$$

$$+ [\frac{1}{12}(0.01)(0.06)^3 + 0.01\,(0.06)(0.03 - 0.02167)^2] = 0.615\,(10^{-6})\ \text{m}^4 \qquad \text{(controls)}$$

$$I_y = \frac{1}{12}(0.06)(0.08)^3 - \frac{1}{12}(0.05)(0.06)^3 = 1.66\,(10^{-6})\ \text{m}^4$$

Critical Load:

$$P_{cr} = \frac{\pi^2 EI}{(KL)^2}; \qquad K = 2.0$$

$$= \frac{\pi^2\,(200)(10^9)(0.615)(10^{-6})}{[2.0\,(5)]^2}$$

$$= 12140\ \text{N} = 12.1\ \text{kN} \qquad \textbf{Ans.}$$

Check Stress:

$$\sigma_{cr} = \frac{P_{cr}}{A} = \frac{12140}{1.80\,(10^{-3})} = 6.74\ \text{MPa} < \sigma_Y = 360\ \text{MPa}$$

Hence, Euler's equation is still valid.

Ans:
$P_{cr} = 12.1$ kN

13–131. The square structural A992 steel tubing has outer dimensions of 8 in. by 8 in. Its cross-sectional area is 14.40 in^2 and its moments of inertia are $I_x = I_y = 131$ in^4. Determine the maximum load P it can support. The column can be assumed fixed at its base and free at its top.

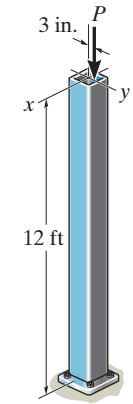

Section Properties:

$A = 14.4 \text{ in}^2; \qquad I_x = I_y = 131 \text{ in}^4$

$$r = \sqrt{\frac{I}{A}} = \sqrt{\frac{131}{14.4}} = 3.01616 \text{ in.}$$

Yielding:

$$\sigma_{\max} = \frac{P}{A}\left[1 + \frac{e\,c}{r^2}\sec\left(\frac{KL}{2\,r}\sqrt{\frac{P}{E\,A}}\right)\right]; \qquad K = 2.0$$

$$\frac{ec}{r^2} = \frac{3\,(4)}{(3.01616)^2} = 1.319084$$

$$\frac{K\,L}{2\,r}\sqrt{\frac{P}{E\,A}} = \frac{2(12)(12)}{2(3.01616)}\sqrt{\frac{P}{29\,(10^3)(14.40)}} = 0.073880\sqrt{P}$$

$$50\,(14.4) = P[1 + 1.319084 \sec\,(0.073880\sqrt{P})]$$

By trial and error:

$P = 199$ kip (controls) **Ans.**

Buckling:

$$P = P_{\text{cr}} = \frac{\pi^2 E\,I}{(K\,L)^2} = \frac{\pi^2(29)(10^3)(131)}{[2(12)(12)]^2} = 452 \text{ kip}$$

$$\sigma_{\text{cr}} = \frac{P_{\text{cr}}}{A} = \frac{452}{14.4} = 31.4 \text{ ksi} < \sigma_Y = 50 \text{ ksi} \qquad \text{(OK)}$$

Ans:
$P = 161$ kip

***13–132.** If the A-36 steel solid circular rod BD has a diameter of 2 in., determine the allowable maximum force **P** that can be supported by the frame without causing the rod to buckle. Use F.S. $= 2$ against buckling.

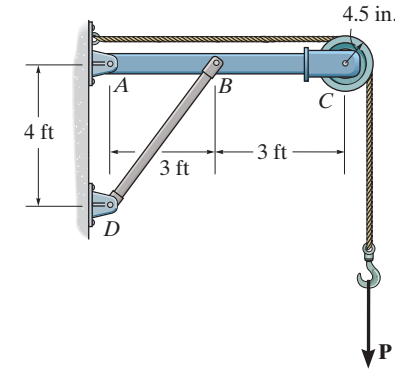

Equilibrium. The compressive force developed in BD can be determined by considering the equilibrium of the free-body diagram of member ABC, Fig. a.

$$\circlearrowleft + \Sigma M_A = 0; \qquad F_{BD}\left(\frac{4}{5}\right)(3) + P(0.375) - P(6.375) = 0 \qquad F_{BD} = 2.5P$$

Section Properties. The cross-sectional area and moment of inertia of BD are

$$A = \pi(1^2) = \pi \text{in}^2 \qquad\qquad I = \frac{\pi}{4}(1^4) = 0.25\pi \text{ in}^4$$

Critical Buckling Load. Since BD is pinned at both of its ends, $K = 1$. The critical buckling load is

$$P_{cr} = F_{BD}(\text{F.S.}) = 2.5P(2) = 5P$$

The length of BD is $L = \sqrt{3^2 + 4^2} = 5$ ft. Applying Euler's formula,

$$P_{cr} = \frac{\pi^2 EI}{(KL)^2}$$

$$5P = \frac{\pi^2[29(10^3)](0.25\pi)}{[1(5)(12)]^2}$$

$$P = 12.49 \text{ kip} = 12.5 \text{ kip} \qquad \textbf{Ans.}$$

Critical Stress. Euler's formula is valid only if $\sigma_{cr} < \sigma_Y$.

$$\sigma_{cr} = \frac{P_{cr}}{A} = \frac{5(12.49)}{\pi} = 19.88 \text{ ksi} < \sigma_Y = 36 \text{ ksi} \qquad \text{(O.K.)}$$

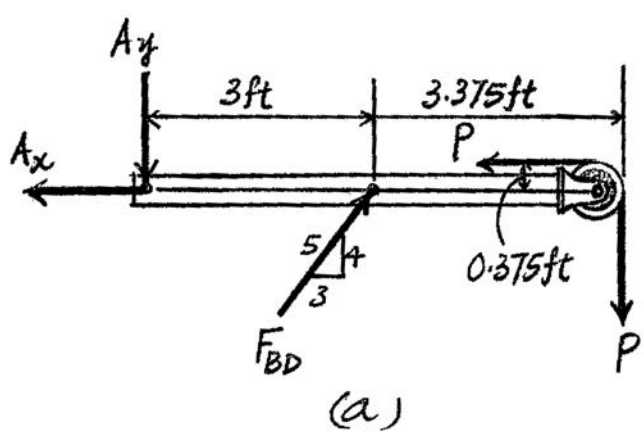

13–133. If $P = 15$ kip, determine the required minimum diameter of the A992 steel solid circular rod BD to the nearest $\frac{1}{16}$ in. Use F.S. $= 2$ against buckling.

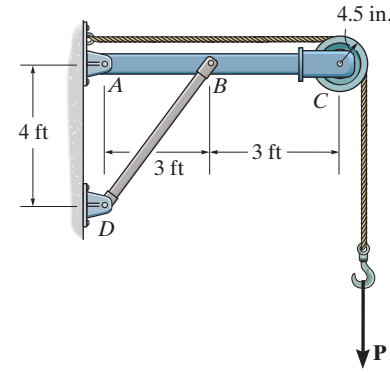

Equilibrium. The compressive force developed in BD can be determined by considering the equilibrium of the free-body diagram of member ABC, Fig. a,

$$\circlearrowleft + \Sigma M_A = 0; \qquad F_{BD}\left(\frac{4}{5}\right)(3) + 15(0.375) - 15(6.375) = 0 \qquad F_{BC} = 37.5 \text{ kip}$$

Section Properties. The cross-sectional area and moment of inertia of BD are

$$A = \frac{\pi}{4}d^2 \qquad\qquad I = \frac{\pi}{4}\left(\frac{d}{2}\right)^4 = \frac{\pi}{64}d^4$$

Critical Buckling Load. Since BD is pinned at both of its ends, $K = 1$. The critical buckling load is

$$P_{\text{cr}} = F_{BD}(\text{F.S.}) = 37.5(2) = 75 \text{ kip}$$

The length of BD is $L = \sqrt{3^2 + 4^2} = 5$ ft. Applying Euler's formula,

$$P_{\text{cr}} = \frac{\pi^2 EI}{(KL)^2}$$

$$75 = \frac{\pi^2\left[29(10^3)\right]\left(\frac{\pi}{64}d^4\right)}{[1(5)(12)]^2}$$

$$d = 2.094 \text{ in.}$$

Use $d = 2\frac{1}{8}$ in. **Ans.**

Critical Stress. Euler's formula is valid only if $\sigma_{cr} < \sigma_Y$.

$$\sigma_{\text{cr}} = \frac{P_{\text{cr}}}{A} = \frac{75}{\frac{\pi}{4}(2.125^2)} = 21.15 \text{ ksi} < \sigma_Y = 50 \text{ ksi} \qquad \text{(O.K.)}$$

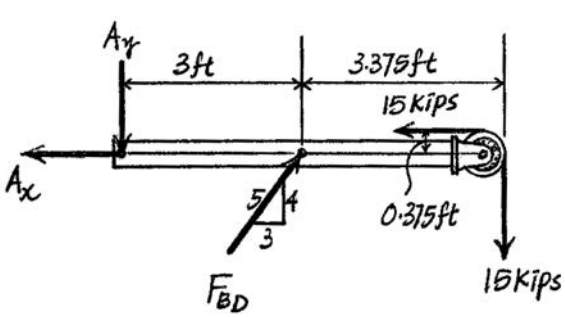

(a)

Ans:

Use $d = 2\frac{1}{8}$ in.

13–134. The steel pipe is fixed supported at its ends. If it is 4 m long and has an outer diameter of 50 mm, determine its required thickness so that it can support an axial load of $P = 100$ kN without buckling. $E_{st} = 200$ GPa, $\sigma_Y = 250$ MPa.

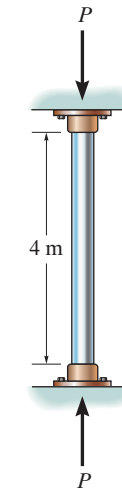

$$I = \frac{\pi}{4}(0.025^4 - r_i^4)$$

Critical Load:

$$P_{cr} = \frac{\pi^2 EI}{(K\,L)^2}; \qquad K = 0.5$$

$$100(10^3) = \frac{\pi^2(200)(10^9)[\frac{\pi}{4}(0.025^4 - r_i^4)]}{[0.5(4)]^2}$$

$$r_i = 0.01908 \text{ m} = 19.1 \text{ mm}$$

$$t = 25 \text{ mm} - 19.1 \text{ mm} = 5.92 \text{ mm}$$ **Ans.**

Check Stress:

$$\sigma = \frac{P_{cr}}{A} = \frac{100(10^3)}{\pi(0.025^2 - 0.0191^2)} = 122 \text{ MPa} < \sigma_Y = 345 \text{ MPa} \qquad \text{(OK)}$$

Ans:
$t = 5.92$ mm

13–135. The W200 × 46 A992-steel column can be considered pinned at its top and fixed at its base. Also, the column is braced at its mid-height against the weak axis. Determine the maximum axial load the column can support without causing it to buckle.

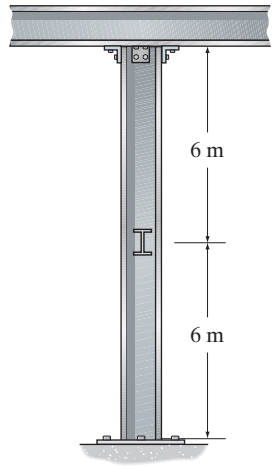

Section Properties. From the table listed in the appendix, the section properties for a W200 × 46 are

$A = 5890\ \text{mm}^2 = 5.89\left(10^{-3}\right)\ \text{m}^2$ $\qquad I_x = 45.5\left(10^6\right)\ \text{mm}^4 = 45.5\left(10^{-6}\right)\ \text{m}^4$

$I_y = 15.3\left(10^6\right)\ \text{mm}^4 = 15.3\left(10^{-6}\right)\ \text{m}^4$

Critical Buckling Load. For buckling about the strong axis, $K_x = 0.7$ and $L_x = 12$ m. Since the column is fixed at its base and pinned at its top,

$$P_{\text{cr}} = \frac{\pi^2 E I_x}{(KL)_x{}^2} = \frac{\pi^2\left[200\left(10^9\right)\right]\left[45.5\left(10^{-6}\right)\right]}{[0.7(12)]^2} = 1.273\left(10^6\right)\text{N} = 1.27\ \text{MN}$$

For buckling about the weak axis, $K_y = 1$ and $L_y = 6$ m since the bracing provides a support equivalent to a pin. Applying Euler's formula,

$$P_{\text{cr}} = \frac{\pi^2 E I_y}{(KL)_y{}^2} = \frac{\pi^2\left[200\left(10^9\right)\right]\left[15.3\left(10^{-6}\right)\right]}{[1(6)]^2} = 838.92\ \text{kN} = 839\ \text{kN (controls)}\ \textbf{Ans.}$$

Critical Stress. Euler's formula is valid only if $\sigma_{\text{cr}} < \sigma_Y$.

$$\sigma_{\text{cr}} = \frac{P_{\text{cr}}}{A} = \frac{838.92\left(10^3\right)}{5.89\left(10^{-3}\right)} = 142.43\ \text{MPa} < \sigma_Y = 345\ \text{MPa} \qquad \text{O.K.}$$

Ans:
$P_{\text{cr}} = 839$ kN

***13–136.** The structural A992 steel column has the cross section shown. If it is fixed at the bottom and free at the top, determine the maximum force P that can be applied at A without causing it to buckle or yield. Use a factor of safety of 3 with respect to buckling and yielding.

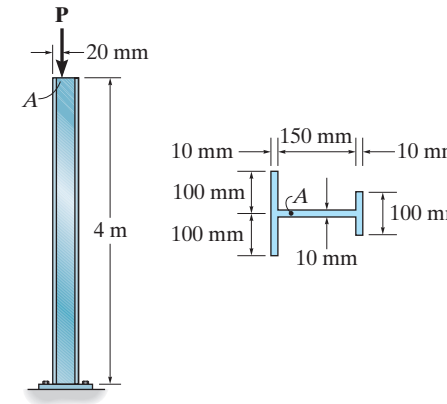

Section properties:

$$\Sigma A = 0.2(0.01) + 0.15\,(0.01) + 0.1(0.01) = 4.5(10^{-3})\ \text{m}^2$$

$$\bar{x} = \frac{\Sigma \tilde{x} A}{\Sigma A} = \frac{0.005\,(0.2)(0.01) + 0.085\,(0.15)(0.01) + 0.165\,(0.1)(0.01)}{4.5(10^{-3})}$$

$$= 0.06722\ \text{m}$$

$$I_y = \frac{1}{12}(0.2)(0.01^3) + 0.2\,(0.01)(0.06722 - 0.005)^2$$

$$+ \frac{1}{12}(0.01)(0.15^3) + 0.01\,(0.15)(0.085 - 0.06722)^2$$

$$+ \frac{1}{12}(0.1)(0.01^3) + 0.1\,(0.01)(0.165 - 0.06722)^2$$

$$= 20.615278\,(10^{-6})\ \text{m}^4$$

$$I_x = \frac{1}{12}(0.01)(0.2^3) + \frac{1}{12}(0.15)(0.01^3) + \frac{1}{12}(0.01)(0.1^3)$$

$$= 7.5125\,(10^{-6})\ \text{m}^4$$

$$r_y = \sqrt{\frac{I_y}{A}} = \sqrt{\frac{20.615278(10^{-6})}{4.5\,(10^{-3})}} = 0.0676844$$

Buckling about *x–x* axis:

$$P_{\text{cr}} = \frac{\pi^2 EI}{(KL)^2} = \frac{\pi^2(200)(10^9)(7.5125)(10^{-6})}{[2.0(4)]^2}$$

$$= 231.70\ \text{kN} \qquad \text{(controls)}$$

$$\sigma_{\text{cr}} = \frac{P_{\text{cr}}}{A} = \frac{231.7\,(10^3)}{4.5\,(10^{-3})} = 51.5\ \text{MPa} < \sigma_\gamma = 345\ \text{MPa}$$

Yielding about *y–y* axis:

$$\sigma_{\max} = \frac{P}{A}\left[1 + \frac{e\,c}{r^2}\sec\left(\frac{KL}{2r}\sqrt{\frac{P}{EA}}\right)\right]; \qquad e = 0.06722 - 0.02 = 0.04722\ \text{m}$$

$$\frac{e\,c}{r^2} = \frac{0.04722\,(0.06722)}{0.0676844^2} = 0.692919$$

$$\frac{KL}{2r}\sqrt{\frac{P}{EA}} = \frac{2.0\,(4)}{2(0.0676844)}\sqrt{\frac{P}{200\,(10^9)(4.5)(10^{-3})}} = 1.96992\,(10^{-3})\sqrt{P}$$

$$345(10^6)(4.5)(10^{-3}) = P[1 + 0.692919\sec(1.96992\,(10^{-3})\sqrt{P})]$$

By trial and error:

$$P = 434.342\ \text{kN}$$

Hence,

$$P_{\text{allow}} = \frac{231.70}{3} = 77.2\ \text{kN} \qquad \textbf{Ans.}$$

13–137. The structural A992 steel column has the cross section shown. If it is fixed at the bottom and free at the top, determine if the column will buckle or yield when the load $P = 10$ kN is applied. Use a factor of safety of 3 with respect to buckling and yielding.

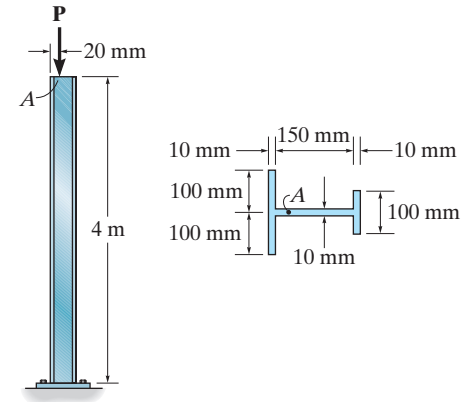

Section properties:

$$\Sigma A = 0.2\,(0.01) + 0.15\,(0.01) + 0.1\,(0.01) = 4.5\,(10^{-3})\ \text{m}^2$$

$$\bar{x} = \frac{\Sigma \tilde{x} A}{\Sigma A} = \frac{0.005\,(0.2)(0.01) + 0.085\,(0.15)(0.01) + 0.165\,(0.1)(0.01)}{4.5\,(10^{-3})} = 0.06722\ \text{m}$$

$$I_y = \frac{1}{12}(0.2)(0.01^3) + 0.2\,(0.01)(0.06722 - 0.005)^2$$

$$+ \frac{1}{12}(0.01)(0.15^3) + 0.01\,(0.15)(0.085 - 0.06722)^2$$

$$+ \frac{1}{12}(0.1)(0.01^3) + 0.1\,(0.01)(0.165 - 0.06722)^2 = 20.615278\,(10^{-6})\ \text{m}^4$$

$$I_x = \frac{1}{12}(0.01)(0.2^3) + \frac{1}{12}(0.15)(0.01^3) + \frac{1}{12}(0.01)(0.1^3) = 7.5125\,(10^{-6})\ \text{m}^4$$

$$r_y = \sqrt{\frac{I_y}{A}} = \sqrt{\frac{20.615278\,(10^{-6})}{4.5\,(10^{-3})}} = 0.0676844\ \text{m}$$

Buckling about *x–x* axis:

$$P_{cr} = \frac{\pi^2 EI}{(KL)^2} = \frac{\pi^2(200)(10^9)(7.5125)(10^{-6})}{[2.0(4)]^2} = 231.70\ \text{kN}$$

$$\sigma_{cr} = \frac{P_{cr}}{A} = \frac{231.7\,(10^3)}{4.5\,(10^{-3})} = 51.5\ \text{MPa} < \sigma_\gamma = 345\ \text{MPa} \qquad \text{O.K.}$$

$$P_{allow} = \frac{P_{cr}}{\text{FS}} = \frac{231.7}{3} = 77.2\ \text{kN} > P = 10\ \text{kN}$$

Hence the column does not buckle.

Yielding about *y–y* axis:

$$\sigma_{max} = \frac{P}{A}\left[1 + \frac{e\,c}{r^2}\sec\left(\frac{KL}{2r}\sqrt{\frac{P}{EA}}\right)\right] \qquad e = 0.06722 - 0.02 = 0.04722\ \text{m}$$

$$P = \frac{10}{3} = 3.333\ \text{kN}$$

$$\frac{P}{A} = \frac{3.333\,(10^3)}{4.5\,(10^{-3})} = 0.7407\ \text{MPa}$$

$$\frac{e\,c}{r^2} = \frac{0.04722\,(0.06722)}{(0.067844)^2} = 0.692919$$

$$\frac{K\,L}{2\,r}\sqrt{\frac{P}{E\,A}} = \frac{2.0\,(4)}{2(0.0676844)}\sqrt{\frac{3.333\,(10^3)}{200\,(10^9)(4.5)(10^{-3})}} = 0.113734$$

$$\sigma_{max} = 0.7407\,[1 + 0.692919\sec(0.113734)] = 1.26\ \text{MPa} < \sigma_\gamma = 345\ \text{MPa}$$

Hence the column does not yield!

No. **Ans.**

Ans:
No, it does not buckle or yield.

14–1. A material is subjected to a general state of plane stress. Express the strain energy density in terms of the elastic constants E, G, and ν and the stress components σ_x, σ_y, and τ_{xy}.

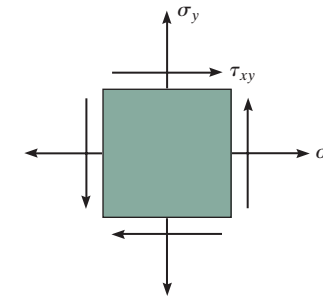

Strain Energy Due to Normal Stresses: We will consider the application of normal stresses on the element in two successive stages. For the first stage, we apply only σ_x on the element. Since σ_x is a constant,

$$(U_i)_1 = \int_v \frac{\sigma_x^2}{2E} dV = \frac{\sigma_x^2 V}{2E}$$

When σ_y is applied in the second stage, the normal strain ϵ_x will be strained by $\epsilon_x' = -\nu\epsilon_y = -\dfrac{\nu\sigma_y}{E}$. Therefore, the strain energy for the second stage is

$$(U_i)_2 = \int_v \left(\frac{\sigma_y^2}{2E} + \sigma_x \epsilon_x'\right) dV$$

$$= \int_v \left[\frac{\sigma_y^2}{2E} + \sigma_x\left(-\frac{\nu\sigma_y}{E}\right)\right] dV$$

Since σ_x and σ_y are constants,

$$(U_i)_2 = \frac{V}{2E}(\sigma_y^2 - 2\nu\sigma_x\sigma_y)$$

Strain Energy Due to Shear Stresses: The application of τ_{xy} does not strain the element in a normal direction. Thus, from Eq. 14–11, we have

$$(U_i)_3 = \int_v \frac{\tau_{xy}^2}{2G} dV = \frac{\tau_{xy}^2 V}{2G}$$

The total strain energy is

$$U_i = (U_i)_1 + (U_i)_2 + (U_i)_3$$

$$= \frac{\sigma_x^2 V}{2E} + \frac{V}{2E}(\sigma_y^2 - 2\nu\sigma_x\sigma_y) + \frac{\tau_{xy}^2 V}{2G}$$

$$= \frac{V}{2E}(\sigma_x^2 + \sigma_y^2 - 2\nu\sigma_x\sigma_y) + \frac{\tau_{xy}^2 V}{2G}$$

and the strain energy density is

$$\frac{U_i}{V} = \frac{1}{2E}(\sigma_x^2 + \sigma_y^2 - 2\nu\sigma_x\sigma_y) + \frac{\tau_{xy}^2}{2G} \qquad \textbf{Ans.}$$

Ans:
$$\frac{U_i}{V} = \frac{1}{2E}(\sigma_x^2 + \sigma_y^2 - 2\nu\sigma_x\sigma_y) + \frac{\tau_{xy}^2}{2G}$$

14–2. The strain-energy density must be the same whether the state of stress is represented by σ_x, σ_y, and τ_{xy}, or by the principal stresses σ_1 and σ_2. This being the case, equate the strain–energy expressions for each of these two cases and show that $G = E/[2(1 + \nu)]$.

$$U = \int_v \left[\frac{1}{2E}(\sigma_x^2 + \sigma_y^2) - \frac{v}{E}\sigma_x\sigma_y + \frac{1}{2G}\tau_{xy}^2 \right] dV$$

$$U = \int_v \left[\frac{1}{2E}(\sigma_1^2 + \sigma_2^2) - \frac{v}{E}\sigma_1\sigma_2 \right] dV$$

Equating the above two equations yields.

$$\frac{1}{2E}(\sigma_x^2 + \sigma_y^2) - \frac{v}{E}\sigma_x\sigma_y + \frac{1}{2G}\tau_{xy}^2 = \frac{1}{2E}(\sigma_1^2 + \sigma_2^2) - \frac{v}{E}\sigma_1\sigma_2 \qquad \textbf{(1)}$$

However, $\sigma_{1,2} = \dfrac{\sigma_x + \sigma_y}{2} \pm \sqrt{\left(\dfrac{\sigma_x - \sigma_y}{2}\right)^2 + \tau_{xy}^2}$

Thus, $\left(\sigma_1^2 + \sigma_2^2\right) = \sigma_x^2 + \sigma_y^2 + 2\tau_{xy}^2$

and also $\sigma_1\sigma_2 = \sigma_x\sigma_y - \tau_{xy}^2$

Substitute into Eq. (1)

$$\frac{1}{2E}\left(\sigma_x^2 + \sigma_y^2\right) - \frac{v}{E}\sigma_x\sigma_y + \frac{1}{2G}\tau_{xy}^2 = \frac{1}{2E}(\sigma_x^2 + \sigma_y^2 + 2\tau_{xy}^2) - \frac{v}{E}\sigma_x\sigma_y + \frac{v}{E}\tau_{xy}^2$$

$$\frac{1}{2G}\tau_{xy}^2 = \frac{\tau_{xy}^2}{E} + \frac{v}{E}\tau_{xy}^2$$

$$\frac{1}{2G} = \frac{1}{E} + \frac{v}{E}$$

$$\frac{1}{2G} = \frac{1}{E}(1 + v)$$

$$G = \frac{E}{2(1 + v)} \qquad \textbf{QED}$$

14–3. Determine the strain energy in the stepped rod assembly. Portion AB is steel and BC is brass. $E_{br} = 101$ GPa, $E_{st} = 200$ GPa, $(\sigma_Y)_{br} = 410$ MPa, $(\sigma_Y)_{st} = 250$ MPa.

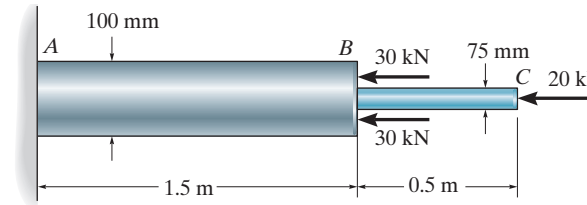

Referring to the FBDs of cut segments in Fig. *a* and *b*,

$\xrightarrow{+} \Sigma F_x = 0; \qquad N_{BC} - 20 = 0 \qquad N_{BC} = 20 \text{ kN}$

$\xrightarrow{+} \Sigma F_x = 0; \qquad N_{AB} - 30 - 30 - 20 = 0 \qquad N_{AB} = 80 \text{ kN}$

The cross-sectional area of segments AB and BC are $A_{AB} = \frac{\pi}{4}(0.1^2) = 2.5(10^{-3})\pi \text{ m}^2$ and $A_{BC} = \frac{\pi}{4}(0.075^2) = 1.40625(10^{-3})\pi \text{ m}^2$.

$$(U_i)_a = \Sigma \frac{N^2 L}{2AE} = \frac{N_{AB}{}^2 L_{AB}}{2A_{AB}\,E_{st}} + \frac{N_{BC}{}^2 L_{BC}}{2A_{BC}\,E_{br}}$$

$$= \frac{\left[80(10^3)\right]^2(1.5)}{2\left[2.5(10^{-3})\pi\right]\left[200(10^9)\right]} + \frac{\left[20(10^3)\right]^2(0.5)}{2\left[1.40625(10^{-3})\,\pi\right]\left[101(10^9)\right]}$$

$$= 3.28 \text{ J} \qquad \textbf{Ans.}$$

This result is valid only if $\sigma < \sigma_y$.

$$\sigma_{AB} = \frac{N_{AB}}{A_{AB}} = \frac{80(10^3)}{2.5(10^{-3})\pi} = 10.19(10^6)\text{Pa} = 10.19 \text{ MPa} < (\sigma_y)_{st} = 250 \text{ MPa} \qquad \text{O.K.}$$

$$\sigma_{BC} = \frac{N_{BC}}{A_{BC}} = \frac{20\,(10^3)}{1.40625(10^{-3})\,\pi} = 4.527(10^6)\text{Pa} = 4.527 \text{ MPa} < (\sigma_y)_{br} = 410 \text{ MPa} \qquad \text{O.K.}$$

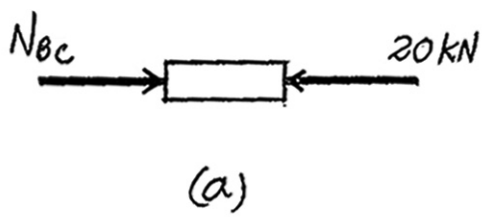

(a)

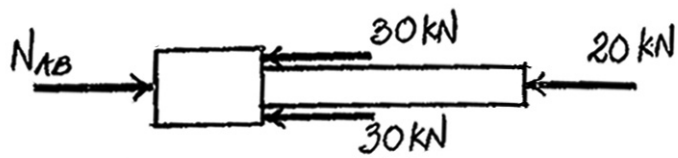

(b)

Ans:
$U_i = 3.28$ J

***14–4.** Determine the torsional strain energy in the A-36 steel shaft. The shaft has a radius of 30 mm.

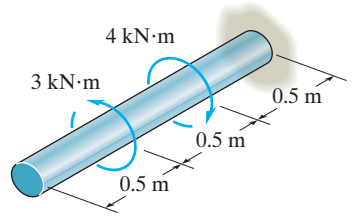

$$U_i = \Sigma\frac{T^2L}{2JG} = \frac{1}{2JG}[0^2(0.5) + ((3)(10^3))^2(0.5) + ((1)(10^3))^2(0.5)]$$

$$= \frac{2.5(10^6)}{JG}$$

$$= \frac{2.5(10^6)}{75(10^9)(\frac{\pi}{2})(0.03)^4} = 26.2\ \text{N}\cdot\text{m} = 26.2\ \text{J} \qquad \textbf{Ans.}$$

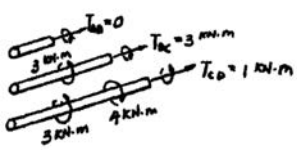

14–5. Using bolts of the same material and cross-sectional area, two possible attachments for a cylinder head are shown. Compare the strain energy developed in each case, and then explain which design is better for resisting an axial shock or impact load.

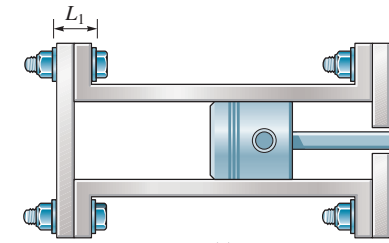

(a)

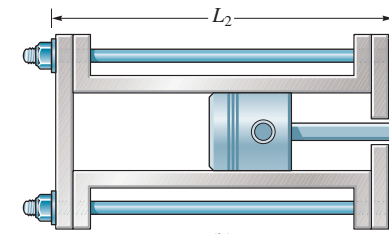

(b)

Case (a)

$$U_A = \frac{N^2 L_1}{2AE}$$

Case (b)

$$U_B = \frac{N^2 L_2}{2AE}$$

Since $U_B > U_A$, i.e., $L_2 > L_1$ the design for case (b) is better able to absorb energy.

Case (b) **Ans.**

Ans:

$$U_A = \frac{N^2 L_1}{2AE}, U_B = \frac{N^2 L_2}{2AE}$$

Since $U_B > U_A$, i.e., $L_2 > L_1$, the design for case (b) is better able to absorb energy.

14–6. If $P = 60$ kN, determine the total strain energy stored in the truss. Each member has a cross-sectional area of $2.5(10^3)$ mm^2 and is made of A-36 steel.

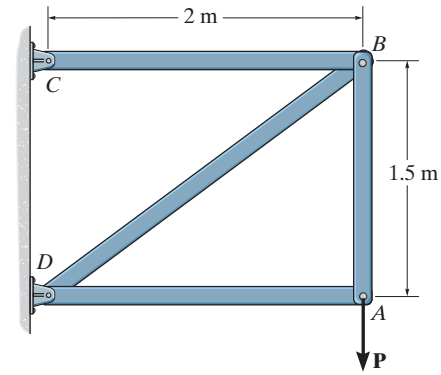

Normal Forces. The normal force developed in each member of the truss can be determined using the method of joints.

Joint *A* (Fig. *a*)

$\xrightarrow{+} \Sigma F_x = 0; \qquad F_{AD} = 0$

$+\uparrow \Sigma F_y = 0; \qquad F_{AB} - 60 = 0 \qquad F_{AB} = 60 \text{ kN (T)}$

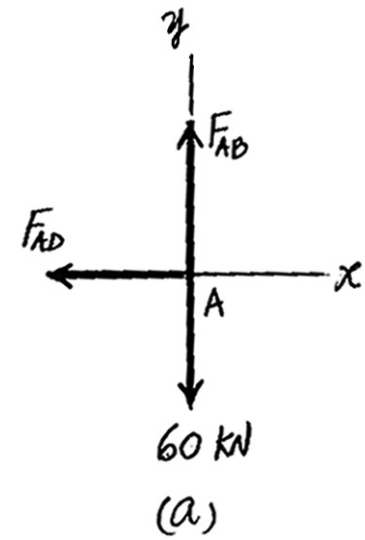

Joint *B* (Fig. *b*)

$+\uparrow \Sigma F_y = 0; \qquad F_{BD}\left(\frac{3}{5}\right) - 60 = 0 \qquad F_{BD} = 100 \text{ kN (C)}$

$\xrightarrow{+} \Sigma F_x = 0; \qquad 100\left(\frac{4}{5}\right) - F_{BC} = 0 \qquad F_{BC} = 80 \text{ kN (T)}$

Axial Strain Energy. $A = 2.5\left(10^3\right) \text{mm}^2 = 2.5\left(10^{-3}\right) \text{m}^2$ and $L_{BD} = \sqrt{2^2 + 1.5^2} = 2.5$ m

$$(U_i)_a = \Sigma \frac{N^2 L}{2AE}$$

$$= \frac{1}{2\left[2.5\left(10^{-3}\right)\right]\left[200\left(10^9\right)\right]}\left[\left[60\left(10^3\right)\right]^2(1.5) + \left[100\left(10^3\right)\right]^2(2.5) + \left[80\left(10^3\right)\right]^2(2)\right]$$

$$= 43.2 \text{ J} \qquad \textbf{Ans.}$$

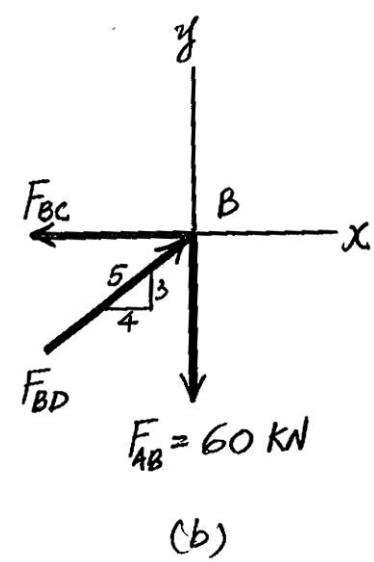

This result is only valid if $\sigma < \sigma_Y$. We only need to check member BD since it is subjected to the greatest normal force

$$\sigma_{BD} = \frac{F_{BD}}{A} = \frac{100\left(10^3\right)}{2.5\left(10^{-3}\right)} = 40 \text{ MPa} < \sigma_Y = 250 \text{ MPa} \qquad \text{O.K.}$$

Ans:
$U_i = 43.2$ J

14–7. Determine the maximum force **P** and the corresponding maximum total strain energy stored in the truss without causing any of the members to have permanent deformation. Each member has the cross-sectional area of $2.5(10^3)\ \text{mm}^2$ and is made of A-36 steel.

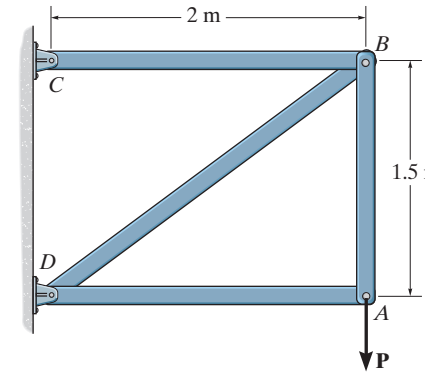

Normal Forces. The normal force developed in each member of the truss can be determined using the method of joints.

Joint *A* (Fig. *a*)

$\xrightarrow{+} \Sigma F_x = 0; \qquad F_{AD} = 0$

$+\uparrow \Sigma F_y = 0; \qquad F_{AB} - P = 0 \qquad F_{AB} = P\ (T)$

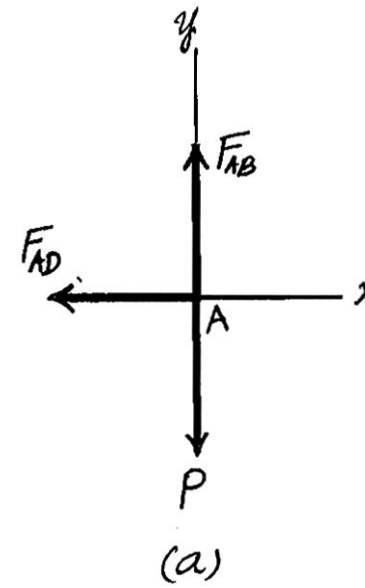

Joint *B* (Fig. *b*)

$+\uparrow \Sigma F_y = 0; \qquad F_{BD}\left(\frac{3}{5}\right) - P = 0 \qquad F_{BD} = 1.6667P\ (\text{C})$

$\xrightarrow{+} \Sigma F_x = 0; \qquad 1.6667P\left(\frac{4}{5}\right) - F_{BC} = 0 \qquad F_{BC} = 1.3333P(\text{T})$

Axial Strain Energy. $A = 2.5(10^3)\text{mm}^2 = 2.5(10^{-3})\text{m}^2$. Member BD is critical since it is subjected to the greatest force. Thus,

$$\sigma_Y = \frac{F_{BD}}{A}$$

$$250(10^6) = \frac{1.6667P}{2.5(10^{-3})}$$

$$P = 375\,\text{kN} \qquad \textbf{Ans.}$$

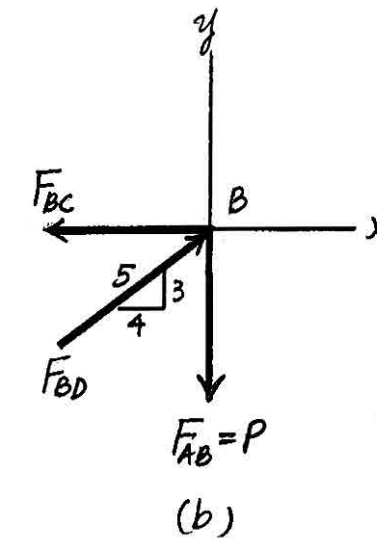

Using the result of P

$F_{AB} = 375\,\text{kN} \qquad F_{BD} = 625\,\text{kN} \qquad F_{BC} = 500\,\text{kN}$

Here, $L_{BD} = \sqrt{1.5^2 + 2^2} = 2.5\ \text{m}$.

$$(U_i)_a = \Sigma \frac{N^2 L}{2AE} =$$

$$= \frac{1}{2[2.5(10^{-3})][200(10^9)]}\left[[375(10^3)]^2(1.5) + [625(10^3)]^2(2.5) + [500(10^3)]^2(2)\right]$$

$$= 1687.5\,\text{J} = 1.69\ \text{kJ} \qquad \textbf{Ans.}$$

Ans:
$P = 375\ \text{kN},\ U_i = 1.69\ \text{kJ}$

***14–8.** Determine the torsional strain energy in the A-36 steel shaft. The shaft has a diameter of 40 mm.

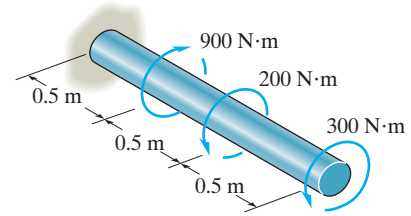

Referring to the FBDs of the cut segments shown in Figs. *a*, *b*, and *c*,

$\Sigma M_x = 0; \quad T_{AB} - 300 = 0 \quad T_{AB} = 300\ \text{N}\cdot\text{m}$

$\Sigma M_x = 0; \quad T_{BC} - 200 - 300 = 0 \quad T_{BC} = 500\ \text{N}\cdot\text{m}$

$\Sigma M_x = 0; \quad T_{CD} - 200 - 300 + 900 = 0 \quad T_{CD} = -400\ \text{N}\cdot\text{m}$

The shaft has a constant circular cross-section and its polar moment of inertia is $J = \frac{\pi}{2}(0.02^4) = 80(10^{-9})\pi\ \text{m}^4$.

$$(U_i)_t = \Sigma \frac{T^2 L}{2GJ} = \frac{T_{AB}{}^2 L_{AB}}{2GJ} + \frac{T_{BC}{}^2 L_{BC}}{2GJ} + \frac{T_{CD} L_{CD}}{2GJ}$$

$$= \frac{1}{2\left[75(10^9)\,80\,(10^{-9})\pi\right]}\left[300^2(0.5) + 500^2(0.5) + (-400)^2(0.5)\right]$$

$$= 6.63\ \text{J}$$ **Ans.**

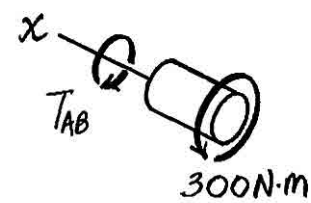

(a)

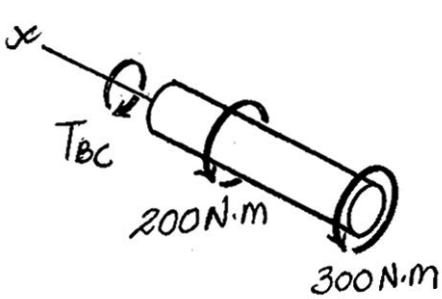

(b)

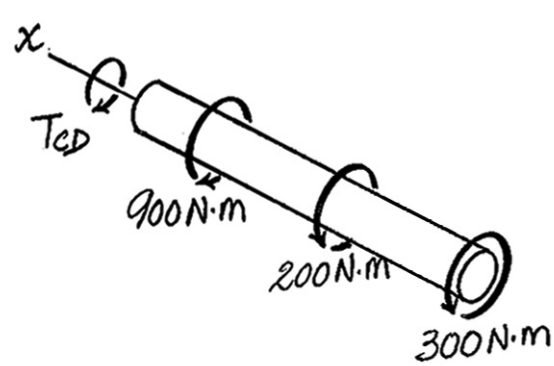

(c)

14–9. Determine the torsional strain energy in the A-36 steel shaft. The shaft has a radius of 40 mm.

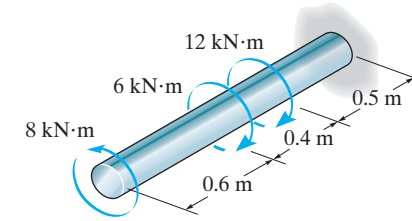

Internal Torsional Moment: As shown on FBD.

Torsional Strain Energy: With polar moment of inertia $J = \frac{\pi}{2}\left(0.04^4\right) = 1.28\left(10^{-6}\right)\pi \text{ m}^4$. Applying Eq. 14–22 gives

$$U_i = \sum \frac{T^2 L}{2GJ}$$

$$= \frac{1}{2GJ}\left[8000^2\,(0.6) + 2000^2\,(0.4) + \left(-10000^2\right)(0.5)\right]$$

$$= \frac{45.0(10^6)\ \text{N}^2 \cdot \text{m}^3}{GJ}$$

$$= \frac{45.0(10^6)}{75(10^9)[1.28(10^{-6})\,\pi]}$$

$$= 149 \text{ J}$$ **Ans.**

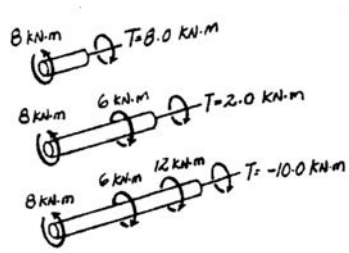

Ans:
$U_i = 149$ J

14–10. The shaft assembly is fixed at C. The hollow segment BC has an inner radius of 20 mm and outer radius of 40 mm, while the solid segment AB has a radius of 20 mm. Determine the torsional strain energy stored in the shaft. The shaft is made of 2014-T6 aluminum alloy. The coupling at B is rigid.

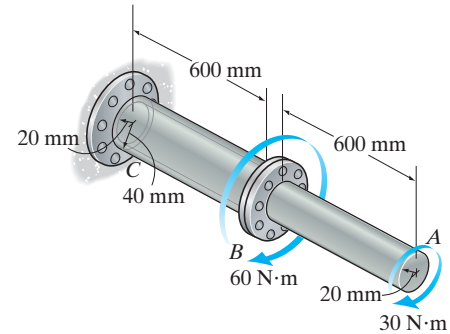

Internal Torque. Referring to the free-body diagram of segment AB, Fig. a,

$\Sigma M_x = 0; \quad T_{AB} + 30 = 0 \qquad\qquad T_{AB} = -30\,\text{N}\cdot\text{m}$

Referring to the free-body diagram of segment BC, Fig. b,

$\Sigma M_x = 0; \quad T_{BC} + 30 + 60 = 0 \qquad T_{AB} = -90\,\text{N}\cdot\text{m}$

Torsional Strain Energy. Here, $J_{AB} = \frac{\pi}{2}\left(0.02^4\right) = 80\left(10^{-9}\right)\pi\ \text{m}^4$ and $J_{BC} = \frac{\pi}{2}\left(0.04^4 - 0.02^4\right) = 1200\left(10^{-9}\right)\pi\ \text{m}^4$,

$$(U_i)_t = \Sigma\frac{T^2L}{2GJ} = \frac{T_{AB}{}^2L_{AB}}{2GJ_{AB}} + \frac{T_{BC}{}^2L_{BC}}{2GJ_{BC}}$$

$$= \frac{(-30)^2(0.6)}{2\left[27\left(10^9\right)\right]\left[80\left(10^{-9}\right)\pi\right]} + \frac{(-90)^2(0.6)}{2\left[27\left(10^9\right)\right]\left[1200\left(10^{-9}\right)\pi\right]}$$

$$= 0.06379\ \text{J} = 0.0638\ \text{J}$$ **Ans.**

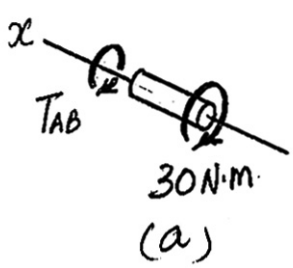

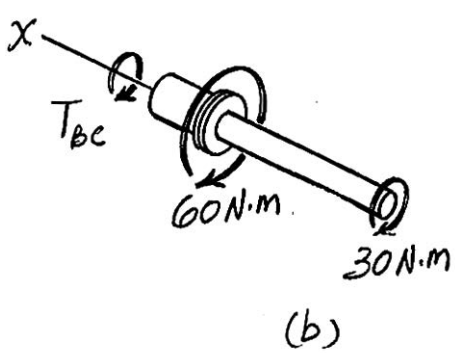

Ans:
$U_i = 0.0638\ \text{J}$

14–11. Determine the bending strain energy in the A-36 structural steel W10 × 12 beam. Obtain the answer using the coordinates (a) x_1 and x_4, and (b) x_2 and x_3.

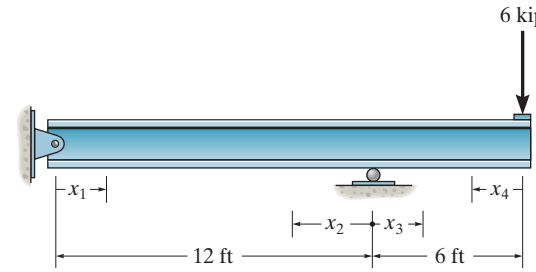

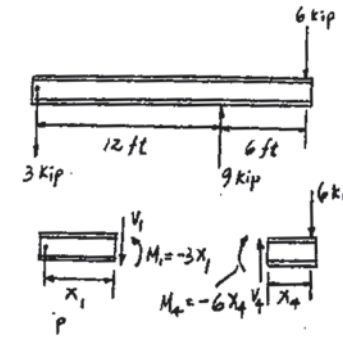

a) $$U_i = \int_0^L \frac{M^2\,dx}{2\,E\,I}$$

$$= \int_0^{144} \frac{(-3x_1)^2\,dx_1}{2\,E\,I} + \int_0^{72} \frac{(-6x_4)^2\,dx_4}{2\,E\,I}$$

$$= \frac{9}{2\,E\,I}\frac{144^3}{3} + \frac{36}{2\,E\,I}\frac{72^3}{3}$$

$$= \frac{6718464}{29\,(53.8)} = 4306 \text{ in.}\cdot\text{lb}$$

$$= 4.31 \text{ in.}\cdot\text{kip}$$ **Ans.**

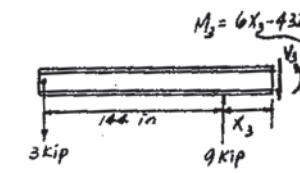

b) $$M_3 = 6x_3 - 432$$

$$M_2 = 9x_2 - 6(x_2 + 72) = 3x_2 - 432$$

$$U_i = \int_0^{144} \frac{(3x_2 - 432)^2\,dx_2}{2\,E\,I} + \int_0^{72} \frac{(6x_3 - 432)^2\,dx_3}{2\,E\,I}$$

$$= \int_0^{144} \frac{(9\,x_2^2 - 2592\,x_2 + 186624)\,dx_2}{2\,E\,I} + \int_0^{72} \frac{(36\,x_3^2 - 5184x_3 + 186624)\,dx_3}{2\,E\,I}$$

$$= \frac{1}{2\,E\,I}[3(144)^3 - \frac{2592}{2}(144)^2 + 186624(144)$$

$$+ 12(72)^3 - \frac{5184}{2}(72)^2 + 186624(72)]$$

$$= \frac{6718464}{29\,(53.8)} = 4306 \text{ in.}\cdot\text{lb}$$

$$= 4.31 \text{ in.}\cdot\text{kip}$$ **Ans.**

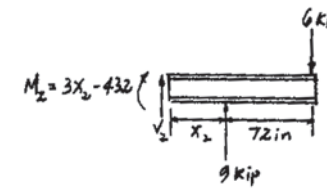

Ans:
$(U_b)_i = 4.31 \text{ in.}\cdot\text{kip}$

***14–12.** If $P = 10$ kip, determine the total strain energy stored in the truss. Each member has a diameter of 2 in. and is made of A992 steel.

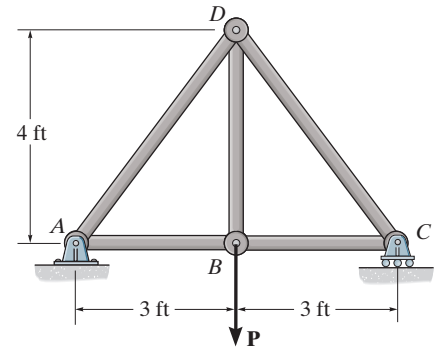

Normal Forces. The normal forces developed in each member of the truss can be determined using the method of joints.

Joint *B* (Fig. *a*)

$\xrightarrow{+} \Sigma F_x = 0; \qquad F_{BC} - F_{AB} = 0 \qquad (1)$

$+\uparrow \Sigma F_y = 0; \qquad F_{BD} - 10 = 0 \qquad F_{BD} = 10 \text{ kip (T) (max)}$

Joint *D* (Fig. *b*)

$\xrightarrow{+} \Sigma F_x = 0; \qquad F_{AD}\left(\frac{3}{5}\right) - F_{CD}\left(\frac{3}{5}\right) = 0 \qquad F_{AD} = F_{CD} = F$

$+\uparrow \Sigma F_y = 0; \qquad 2\left[F\left(\frac{4}{5}\right)\right] - 10 = 0 \qquad F_{AD} = F_{CD} = F = 6.25 \text{ kip (C)}$

Joint *C* (Fig. *c*)

$\xrightarrow{+} \Sigma F_x = 0; \qquad 6.25\left(\frac{3}{5}\right) - F_{BC} = 0 \qquad F_{BC} = 3.75 \text{ kip (T)}$

Using the result of $\mathbf{F}_{BC}$, Eq. (1) gives

$F_{AB} = 3.75 \text{ kip (T)}$

Axial Strain Energy. $A = \frac{\pi}{4}(2^2) = \pi \text{ in}^2$ and $L_{CD} = \sqrt{3^2 + 4^2} = 5$ ft

$$(U_i)_a = \Sigma \frac{N^2 L}{2AE}$$

$$= \frac{1}{2(\pi)(29)(10^3)}\left[10^2(4)(12) + 6.25^2(5)(12) + 6.25^2(5)(12) + 3.75^2(3)(12) + 3.75^2(3)(12)\right]$$

$$= 0.0576 \text{ in.} \cdot \text{kip} \qquad \textbf{Ans.}$$

This result is only valid if $\sigma < \sigma_Y$. We only need to check member BD since it is subjected to the greatest normal force

$$\sigma_{BD} = \frac{F_{BD}}{A} = \frac{10}{\pi} = 3.18 \text{ ksi} < \sigma_Y = 50 \text{ ksi} \qquad \text{(O.K.)}$$

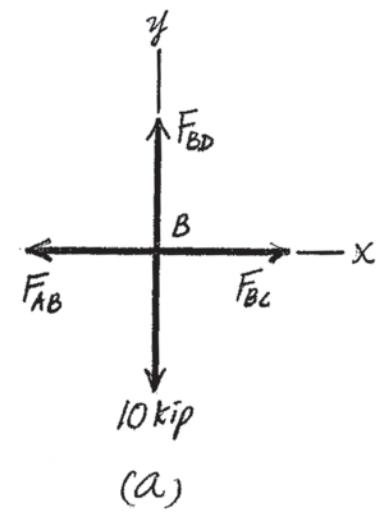

(a)

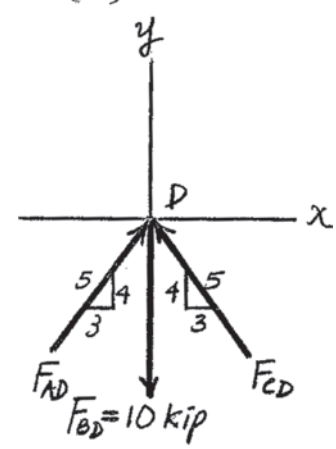

(b)

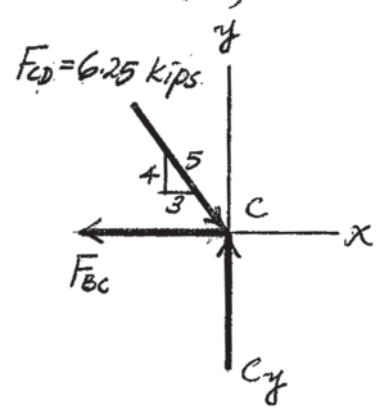

(c)

14–13. Determine the maximum force **P** and the corresponding maximum total strain energy that can be stored in the truss without causing any of the members to have permanent deformation. Each member of the truss has a diameter of 2 in. and is made of A-36 steel.

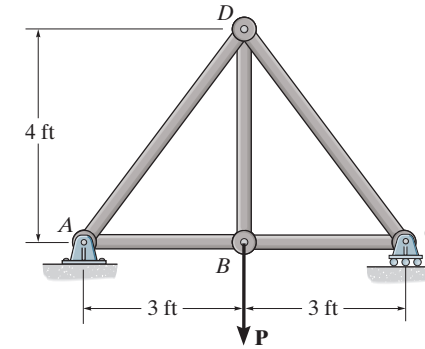

Normal Forces. The normal force developed in each member of the truss can be determined using the method of joints.

Joint *B* (Fig. *a*)

$\xrightarrow{+} \Sigma F_x = 0; \qquad F_{BC} - F_{AB} = 0 \qquad (1)$

$+\uparrow \Sigma F_y = 0; \qquad F_{BD} - P = 0 \qquad F_{BD} = P(\text{T})$

Joint *D* (Fig. *b*)

$\xrightarrow{+} \Sigma F_x = 0; \qquad F_{AD}\left(\frac{3}{5}\right) - F_{CD}\left(\frac{3}{5}\right) = 0 \quad F_{AD} = F_{CD} = F$

$+\uparrow \Sigma F_y = 0; \qquad 2\left[F\left(\frac{4}{5}\right)\right] - P = 0 \qquad F_{AD} = F_{CD} = F = 0.625P\ (\text{C})$

Joint *C* (Fig. *c*)

$\xrightarrow{+} \Sigma F_x = 0; \qquad 0.625P\left(\frac{3}{5}\right) - F_{BC} = 0 \quad F_{BC} = 0.375P\ (\text{T})$

Using the result of $\mathbf{F}_{BC}$, Eq. (1) gives

$F_{AB} = 0.375P\ (\text{T})$

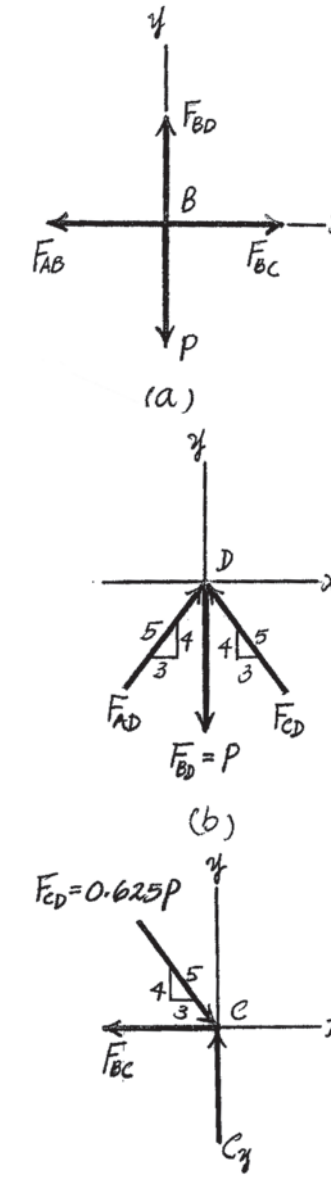

Axial Strain Energy. $A = \frac{\pi}{4}(2^2) = \pi\,\text{in}^2$ and $L_{AD} = L_{CD} = \sqrt{3^2 + 4^2} = 5$ ft.

Member *BD* is critical since it is subjected to greatest normal force. Thus,

$$\sigma_Y = \frac{F_{BD}}{A}$$

$$36 = \frac{P}{\pi}$$

$$P = 113.10\ \text{kip} = 113\ \text{kip} \qquad \textbf{Ans.}$$

Using the result of *P*,

$F_{BD} = 113.10$ kip $\qquad F_{AD} = F_{CD} = 70.69$ kip $\qquad F_{BC} = F_{AB} = 42.41$ kip

$$(U_i)_a = \Sigma\frac{N^2L}{2AE} = \frac{1}{2(\pi)(29)(10^3)}\left[113.10^2(4)(12) + 70.69^2(5)(12) + 70.69^2(5)(12) + 42.41^2(3)(12) + 42.41^2(3)(12)\right]$$

$$= 7.371\ \text{in}\cdot\text{kip} = 7.37\ \text{in}\cdot\text{kip} \qquad \textbf{Ans.}$$

Ans:
$P = 113$ kip, $U_i = 7.37$ in · kip

14–14. Consider the thin-walled tube of Fig. 5–28. Use the formula for shear stress, $\tau_{avg} = T/2tA_m$, Eq. 5–18, and the general equation of shear strain energy, Eq. 14–11, to show that the twist of the tube is given by Eq. 5–20. *Hint:* Equate the work done by the torque T to the strain energy in the tube, determined from integrating the strain energy for a differential element, Fig. 14–4, over the volume of material.

$$U_i = \int_v \frac{\tau^2\, dV}{2\, G} \qquad \text{but } \tau = \frac{T}{2\, t\, A_m}$$

Thus,

$$U_i = \int_v \frac{T^2}{8\, t^2\, A_m^2 G} dV$$

$$= \frac{T^2}{8\, A_m^2 G} \int_v \frac{dV}{t^2} = \frac{T^2}{8\, A_m^2 G} \int_A \frac{dV}{t^2} \int_0^L dx = \frac{T^2 L}{8\, A_m^2 G} \int_A \frac{dA}{t^2}$$

However, $dA = t\, ds$. Thus,

$$U_i = \frac{T^2 L}{8\, A_m^2 G} \int \frac{ds}{t}$$

$$U_e = \frac{1}{2} T \phi$$

$$U_e = U_i$$

$$\frac{1}{2} T\, \phi = \frac{T^2 L}{8\, A_m^2 G} \int \frac{ds}{t}$$

$$\phi = \frac{T\, L}{4\, A_m^2 G} \int \frac{ds}{t}$$

QED

14–15. Determine the bending strain energy stored in the simply supported beam subjected to the uniform distributed load. EI is constant.

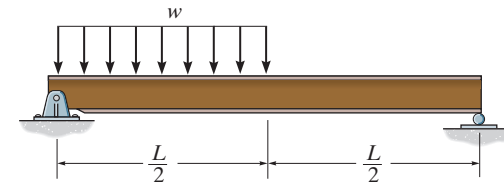

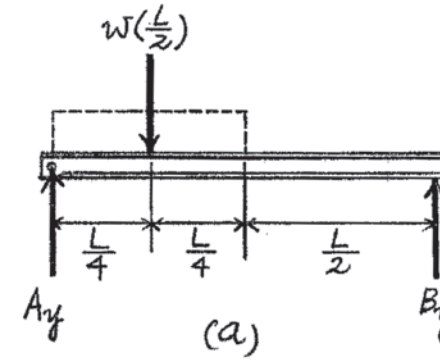

Support Reactions. Referring to the FBD of the entire beam,

$$\circlearrowleft + \Sigma M_A = 0; \qquad B_y(L) - w\left(\frac{L}{2}\right)\left(\frac{L}{4}\right) = 0 \qquad B_y = \frac{wL}{8}$$

$$\circlearrowleft + \Sigma M_B = 0; \qquad w\left(\frac{L}{2}\right)\left(\frac{3}{4}L\right) - A_y(L) = 0 \qquad A_y = \frac{3wL}{8}$$

Internal Moment. Using the coordinates x_1 and x_2, the FBDS of the beam's cut segments in Fig. b and c are drawn. For coordinate x_1,

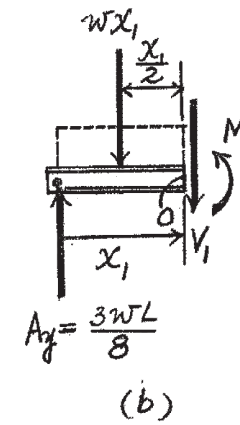

$$\circlearrowleft + \Sigma M_0 = 0; \qquad M_1 + wx_1\left(\frac{x_1}{2}\right) - \frac{3wL}{8}x_1 = 0 \qquad M_1 = \frac{3wL}{8}x_1 - \frac{w}{2}x_1^2$$

For coordinate x_2,

$$\circlearrowleft + \Sigma M_0 = 0; \qquad \frac{wL}{8}x_2 - M_2 = 0 \qquad M_2 = \frac{wL}{8}x_2$$

Bending Strain Energy.

$$(U_b)_i = \Sigma \int_0^L \frac{M^2 dx}{2EI} = \frac{1}{2EI}\left[\int_0^{L/2}\left(\frac{3wL}{8}x_1 - \frac{w}{2}x_1^2\right)^2 dx_1 + \int_0^{L/2}\left(\frac{wL}{8}x_2\right)^2 dx_2\right]$$

$$= \frac{1}{2EI}\left[\int_0^{L/2}\left(\frac{9w^2L^2}{64}x_1^2 + \frac{w^2}{4}x_1^4 - \frac{3w^2L}{8}x_1^3\right)dx_1 + \int_0^{L/2}\frac{w^2L^2}{64}x_2^2\,dx_2\right]$$

$$= \frac{1}{2EI}\left[\left(\frac{3w^2L^2}{64}x_1^3 + \frac{w^2}{20}x_1^5 - \frac{3w^2L}{32}x_1^4\right)\Bigg|_0^{L/2} + \left(\frac{w^2L^2}{192}x_2^3\right)\Bigg|_0^{L/2}\right]$$

$$= \frac{17w^2L^5}{15360\,EI} \qquad \textbf{Ans.}$$

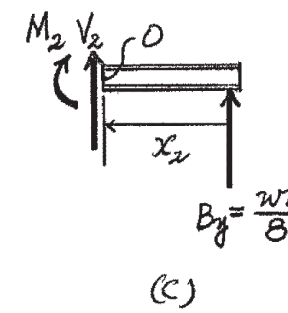

Ans:
$(U_b)_i = \dfrac{17w^2L^5}{15360\,EI}$

***14–16.** Determine the bending strain energy in the A992 steel beam due to the loading shown. Obtain the answer using the coordinates (a) x_1 and x_4, and (b) x_2 and x_3. $I = 53.4\ \text{in}^4$.

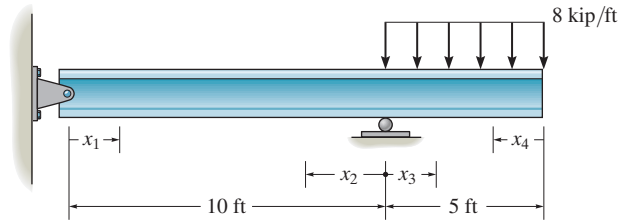

a)

$$U_i = \int_0^L \frac{M^2 dx}{2EI} = \frac{1}{2EI}\left[\int_0^{120\text{ in.}} (-10x_1)^2 dx_1 + \int_0^{60\text{ in.}} \left(-\frac{1}{3}x_4^2\right)^2 dx_4\right]$$

$$= \frac{37.44(10^6)}{EI} = \frac{37.44(10^6)}{29(10^3)(53.8)} = 24.00\ \text{in.}\cdot\text{kip} = 2.00\ \text{ft}\cdot\text{kip} \qquad \textbf{Ans.}$$

b)

$$U_i = \int_0^L \frac{M^2 dx}{2EI} = \frac{1}{2EI}\left[\int_0^{60\text{ in.}} \left(40x_3 - \frac{1}{3}x_3^2 - 1200\right)^2 dx_3 + \int_0^{120\text{ in.}} (10x_2 - 1200)^2 dx_2\right]$$

$$= \frac{1}{2EI}\left[\int_0^{60\text{ in.}} \left(\frac{1}{9}x_3^4 - \frac{80}{3}x_3^3 + 24000x_3^2 - 96000x_3 + 1440000\right)dx_3 + \right.$$

$$\left. \int_0^{120\text{ in.}} (100x_2^2 - 24000x_2 + 1440000)dx_2\right]$$

$$= \frac{37.44(10^6)}{EI} = \frac{37.44(10^6)}{29(10^3)(53.8)} = 24.00\ \text{in.}\cdot\text{kip} = 2.00\ \text{ft}\cdot\text{kip} \qquad \textbf{Ans.}$$

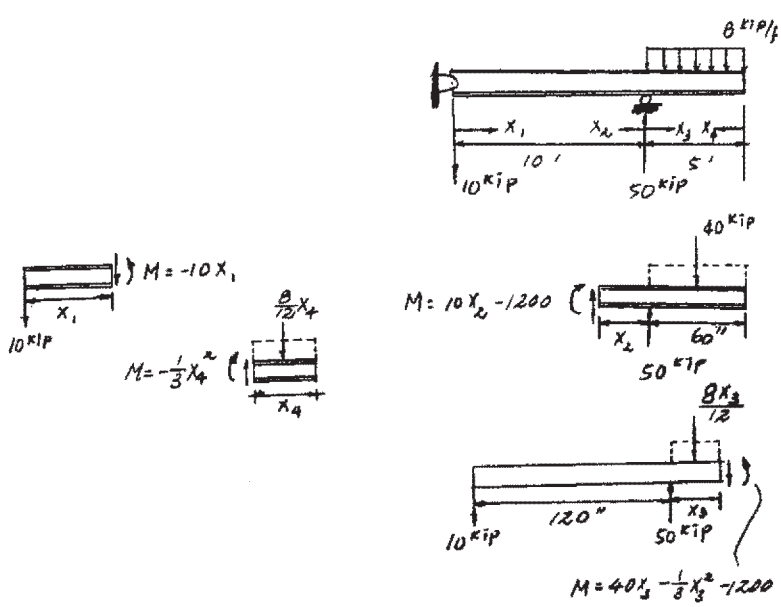

14–17. Determine the bending strain energy stored in the simply supported beam subjected to the triangular distributed load. EI is constant.

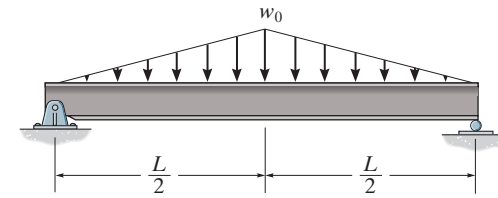

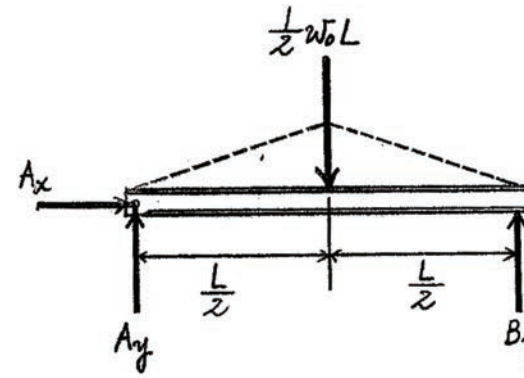

(a)

Support Reactions. Referring to the FBD of the entire beam, Fig. *a*,

$$\xrightarrow{+} \Sigma F_x = 0; \qquad A_x = 0$$

$$\circlearrowleft + \Sigma M_B = 0; \qquad \frac{1}{2} w_0 L\left(\frac{L}{2}\right) - A_y(L) = 0 \qquad A_y = \frac{w_0 L}{4}$$

Internal Moment. Referring to the FBD of the beam's left cut segment Fig. *b*,

$$\circlearrowleft + \Sigma M_0 = 0; \quad M + \left[\frac{1}{2}\left(\frac{2w_0}{L}x\right)x\right]\left(\frac{x}{3}\right) - \frac{w_0 L}{4}x = 0 \quad M = \frac{w_0}{12L}(3L^2x - 4x^3)$$

Bending Strain Energy.

$$(U_i)_b = \Sigma \int_0^L \frac{M^2 dx}{2EI} = 2\int_0^{L/2} \frac{\left[\frac{w_0}{12L}(3L^2x - 4x^3)\right]^2 dx}{2EI}$$

$$= \frac{w_0^2}{144\,EIL^2}\int_0^{L/2} (9L^4x^2 + 16x^6 - 24L^2x^4)\,dx.$$

$$= \frac{w_0^2}{144\,EIL^2}\left(3L^4x^3 + \frac{16}{7}x^7 - \frac{24}{5}L^2x^5\right)\Bigg|_0^{L/2}$$

$$= \frac{17w_0^2L^5}{10080\,EI} \qquad \textbf{Ans.}$$

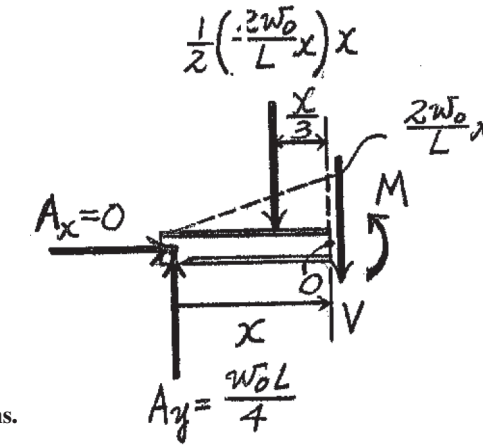

(b)

Ans:

$$(U_b)_i = \frac{17w_0^2L^5}{10\,080\,EI}$$

14–18. Determine the bending strain energy stored in the simply supported beam subjected to the triangular distributed load. *EI* is constant.

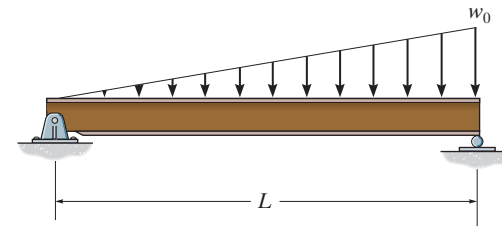

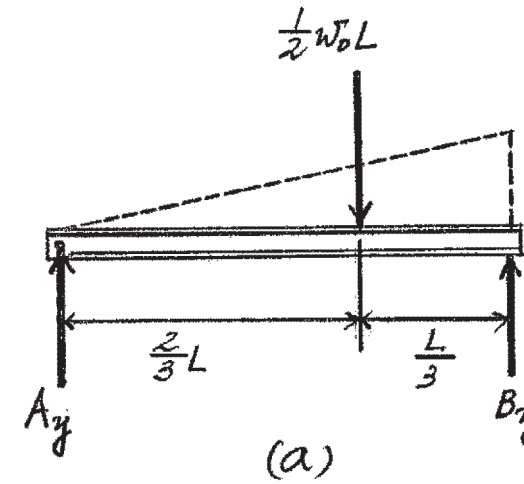

Support Reactions. Referring to the FBD of the entire beam, Fig. *a*,

$$\circlearrowleft + \Sigma M_B = 0; \qquad \frac{1}{2}w_0L\left(\frac{L}{3}\right) - A_yL = 0 \qquad A_y = \frac{w_0L}{6}$$

Internal Moment. Referring to the FBD of the beam's left cut segment, Fig. *b*,

$$\circlearrowleft + \Sigma M_0 = 0; \qquad M + \left[\frac{1}{2}\left(\frac{w_0}{L}x\right)x\right]\left(\frac{x}{3}\right) - \frac{w_0L}{6}x = 0$$

$$M = \frac{w_0}{6L}(L^2x - x^3)$$

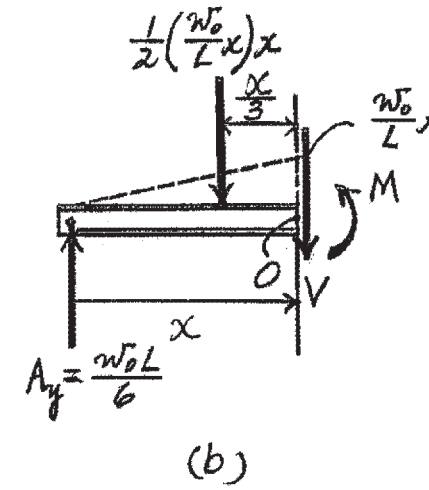

Bending Strain Energy.

$$(U_i)_b = \int_0^L \frac{M^2\,dx}{2EI} = \int_0^L \frac{\left[\frac{w_0}{6L}(L^2x - x^3)\right]^2 dx}{2EI}$$

$$= \frac{w_0^2}{72EIL^2}\int_0^L (L^2x - x^3)^2\,dx$$

$$= \frac{w_0^2}{72EIL^2}\int_0^L (L^4x^2 + x^6 - 2L^2x^4)\,dx$$

$$= \frac{w_0^2}{72EIL^2}\left(\frac{L^4}{3}x^3 + \frac{x^7}{7} - \frac{2L^2}{5}x^5\right)\Big|_0^L$$

$$= \frac{w_0^2L^5}{945\,EI} \qquad \textbf{Ans.}$$

Ans:

$$(U_b)_i = \frac{w_0^2L^5}{945\,EI}$$

14–19. Determine the strain energy in the *horizontal* curved bar due to torsion. There is a *vertical* force **P** acting at its end. JG is constant.

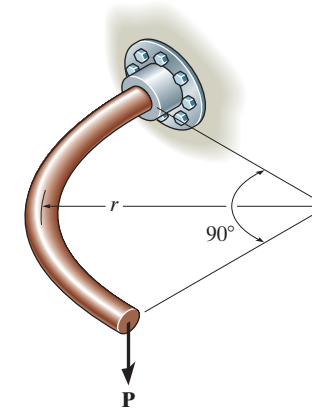

$T = Pr(1 - \cos\theta)$

Strain Energy:

$$U_i = \int_0^L \frac{T^2\,ds}{2JG}$$

However,

$$s = r\theta; \qquad ds = r\,d\theta$$

$$U_i = \int_0^\theta \frac{T^2 r\,d\theta}{2JG} = \frac{r}{2JG}\int_0^{\pi/2} [Pr(1 - \cos\theta)]^2 d\theta$$

$$= \frac{P^2r^3}{2JG}\int_0^{\pi/2} (1 - \cos\theta)^2\,d\theta$$

$$= \frac{P^2r^3}{2JG}\int_0^{\pi/2} (1 + \cos^2\theta - 2\cos\theta)d\theta$$

$$= \frac{P^2r^3}{2JG}\int_0^{\pi/2} \left(1 + \frac{\cos 2\theta + 1}{2} - 2\cos\theta\right) d\theta$$

$$= \frac{P^2r^3}{JG}\left(\frac{3\pi}{8} - 1\right) \qquad \textbf{Ans.}$$

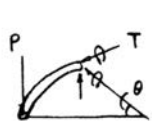

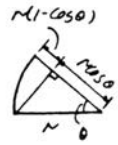

Ans:

$$(U_t)_i = \frac{P^2r^3}{JG}\left(\frac{3\pi}{8} - 1\right)$$

***14–20.** The concrete column contains six 1-in.-diameter steel reinforcing rods. If the column supports a load of 300 kip, determine the strain energy in the column. $E_{st} = 29(10^3)$ ksi, $E_c = 3.6(10^3)$ ksi.

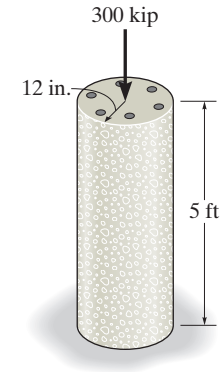

Equilibrium:

$$+\uparrow \Sigma F_y = 0; \qquad P_{conc} + P_{st} - 300 = 0 \tag{1}$$

Compatibility Condition:

$$\Delta_{conc} = \Delta_{st}$$

$$\frac{P_{conc}L}{[\pi(12^2) - 6\pi(0.5^2)](3.6)(10^3)} = \frac{P_{st}L}{6\pi\,(0.5^2)(29)(10^3)}$$

$$P_{conc} = 11.7931\,P_{st} \tag{2}$$

Solving Eqs. (1) and (2) yields:

$$P_{st} = 23.45 \text{ kip}$$

$$P_{conc} = 276.55 \text{ kip}$$

$$U_i = \Sigma\frac{N^2L}{2AE} = \frac{(23.45)^2(5)(12)}{2(6)(\pi)(0.5)^2(29)(10^3)} + \frac{(276.55)^2(5)(12)}{2[(\pi)(12^2) - 6\pi(0.5^2)](3.6)(10^3)}$$

$$= 1.544 \text{ in.}\cdot\text{kip} = 0.129 \text{ ft}\cdot\text{kip}$$ **Ans.**

14–21. A load of 5 kN is applied to the center of the A992 steel beam, for which $I = 4.5(10^6)\ \text{mm}^4$. If the beam is supported on two springs, each having a stiffness of $k = 8\ \text{MN/m}$, determine the strain energy in each of the springs and the bending strain energy in the beam.

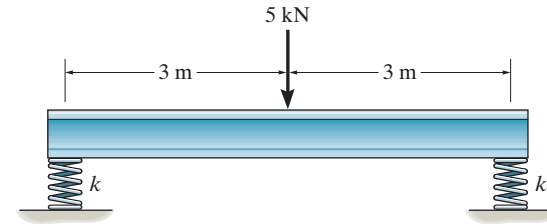

Bending Strain Energy:

$$(U_b)_i = \int_0^L \frac{M^2 dx}{2EI} = (2)\frac{1}{2EI}\int_0^3 (2.5(10^3)x)^2\, dx$$

$$= \frac{56.25(10^6)}{EI} = \frac{56.25(10^6)}{200(10^9)(4.5)(10^{-6})} = 62.5\ \text{J} \qquad \textbf{Ans.}$$

Spring Strain Energy:

$$\Delta_{sp} = \frac{P_{sp}}{k} = \frac{2.5(10^3)}{8(10^6)} = 0.3125(10^{-3})\ \text{m}$$

$$(U_i)_{sp} = (U_c)_{sp} = \frac{1}{2}k\Delta_{sp}^2 = \frac{1}{2}(8)(10^6)[0.3125(10^{-3})]^2 = 0.391\ \text{J} \qquad \textbf{Ans.}$$

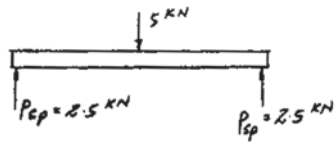

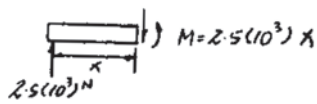

Ans:
$(U_b)_i = 62.5\ \text{J}, (U_i)_{sp} = 0.391\ \text{J}$

14–22. Determine the bending strain energy in the beam and the axial strain energy in each of the two posts. All members are made of aluminum and have a square cross section 50 mm by 50 mm. Assume the posts only support an axial load. $E_{al} = 70$ GPa.

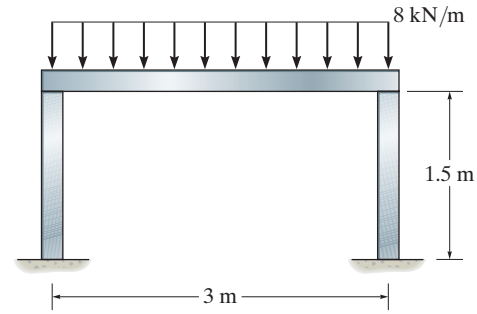

Section Properties:

$$A = (0.05)(0.05) = 2.5(10^{-3})\ \text{m}^2$$

$$I = \frac{1}{12}(0.05)(0.05)^3 = 0.52083(10^{-6})\ \text{m}^4$$

Bending Strain Energy:

$$(U_b)_i = \int_0^L \frac{M^2\,dx}{2EI} = \frac{1}{2EI}\left[\int_0^3 (12(10^3)x - 4(10^3)x^2)^2 dx\right]$$

$$= \frac{1}{2EI}\left[\int_0^3 (144(10^6)x^2 + 16(10^6)x^4 - 96(10^6)x^3)dx\right]$$

$$= \frac{64.8(10^6)}{EI} = \frac{64.8(10^6)}{70(10^9)(0.52083)(10^{-6})} = 1777\ \text{J} = 1.78\ \text{kJ} \qquad \textbf{Ans.}$$

Axial Strain Energy:

$$U_i = \int_0^L \frac{N^2 dx}{2EA} = \frac{N^2 L}{2EA} = \frac{[12(10^3)]^2(1.5)}{2(70)(10^9)(2.5)(10^{-3})} = 0.617\ \text{J} \qquad \textbf{Ans.}$$

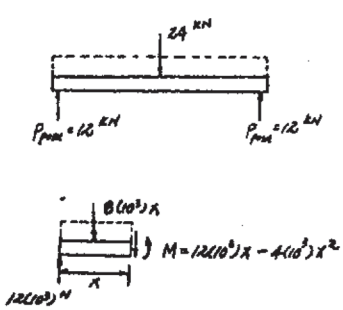

Ans:
$(U_b)_i = 1.78$ kJ, $(U_a)_i = 0.617$ J

14–23. Determine the bending strain energy in the cantilevered beam due to a uniform load w. Solve the problem two ways. (a) Apply Eq. 14–17. (b) The load $w\,dx$ acting on a segment dx of the beam is displaced a distance y, where $y = w(-x^4 + 4L^3x - 3L^4)/(24EI)$, the equation of the elastic curve. Hence the internal strain energy in the differential segment dx of the beam is equal to the external work, i.e., $dU_i = \frac{1}{2}(w\,dx)(-y)$. Integrate this equation to obtain the total strain energy in the beam. EI is constant.

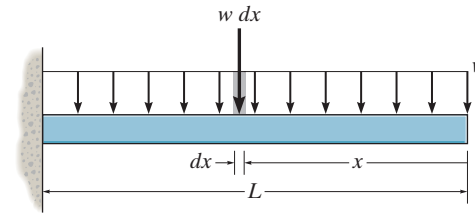

Internal Moment Function: As shown on FBD.

Bending Strain Energy: a) Applying Eq. 14–17 gives

$$U_i = \int_0^L \frac{M^2 dx}{2EI}$$

$$= \frac{1}{2EI}\left[\int_0^L \left[-\frac{w}{2}x^2\right]^2 dx\right]$$

$$= \frac{w^2}{8EI}\left[\int_0^L x^4 dx\right]$$

$$= \frac{w^2 L^5}{40EI} \qquad \textbf{Ans.}$$

b) Integrating $dU_i = \frac{1}{2}(wdx)(-y)$

$$dU_i = \frac{1}{2}(wdx)\left[-\frac{w}{24EI}\left(-x^4 + 4L^3x - 3L^4\right)\right]$$

$$dU_i = \frac{w^2}{48EI}\left(x^4 - 4L^3x + 3L^4\right)dx$$

$$U_i = \frac{w^2}{48EI}\int_0^L \left(x^4 - 4L^3x + 3L^4\right)dx$$

$$= \frac{w^2L^5}{40EI} \qquad \textbf{Ans.}$$

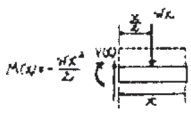

Ans:

$$(U_b)_i = \frac{w^2L^5}{40\,EI}$$

***14–24.** Determine the bending strain energy in the simply supported beam due to a uniform load w. Solve the problem two ways. (a) Apply Eq. 14–17. (b) The load $w\,dx$ acting on the segment dx of the beam is displaced a distance y, where $y = w(-x^4 + 2Lx^3 - L^3x)/(24EI)$, the equation of the elastic curve. Hence the internal strain energy in the differential segment dx of the beam is equal to the external work, i.e., $dU_i = \frac{1}{2}(w\,dx)(-y)$. Integrate this equation to obtain the total strain energy in the beam. EI is constant.

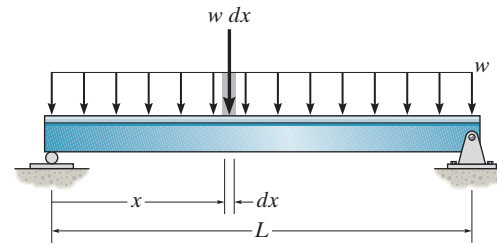

Support Reactions: As shown on FBD(a).

Internal Moment Function: As shown on FBD(b).

Bending Strain Energy: a) Applying Eq. 14–17 gives

$$U_i = \int_0^L \frac{M^2 dx}{2EI}$$

$$= \frac{1}{2EI}\left[\int_0^L \left[\frac{w}{2}(Lx - x^2)\right]^2 dx\right]$$

$$= \frac{w^2}{8EI}\left[\int_0^L (L^2x^2 + x^4 - 2Lx^3)\,dx\right]$$

$$= \frac{w^2L^5}{240EI} \qquad \textbf{Ans.}$$

b) Integrating $dU_i = \frac{1}{2}(wdx)(-y)$

$$dU_i = \frac{1}{2}(wdx)\left[-\frac{w}{24EI}(-x^4 + 2Lx^3 - L^3x)\right]$$

$$dU_i = \frac{w^2}{48EI}(x^4 - 2Lx^3 + L^3x)\,dx$$

$$U_i = \frac{w^2}{48EI}\int_0^L (x^4 - 2Lx^3 + L^3x)\,dx$$

$$= \frac{w^2L^5}{240EI} \qquad \textbf{Ans.}$$

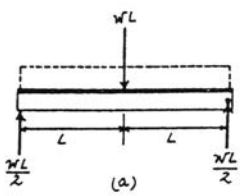

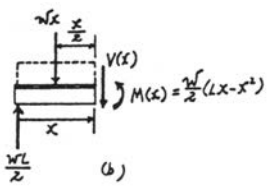

14–25. Determine the horizontal displacement of joint B. The members of the truss are A992 steel bars, each with a cross-sectional area of 2500 mm^2.

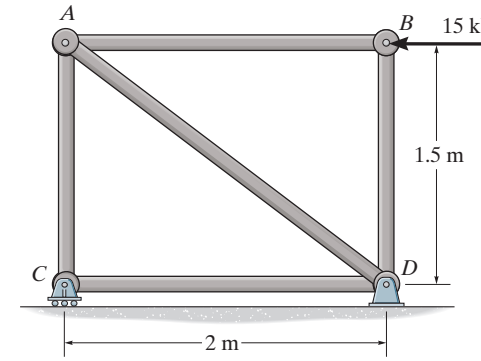

Normal Forces. The normal forces developed in each member of the truss can be determined using the method of joints.

Joint *B* (Fig. *a*)

$\xrightarrow{+} \Sigma F_x = 0; \qquad F_{AB} - 15 = 0 \qquad F_{AB} = 15 \text{ kN (C)}$

$+\uparrow \Sigma F_y = 0; \qquad F_{BD} = 0$

Joint *A* (Fig. *b*)

$\xrightarrow{+} \Sigma F_x = 0; \qquad F_{AD}\left(\frac{4}{5}\right) - 15 = 0 \qquad F_{AD} = 18.75 \text{ kN (T)}$

$+\uparrow \Sigma F_y = 0; \qquad F_{AC} - 18.75\left(\frac{3}{5}\right) = 0 \qquad F_{AC} = 11.25 \text{ kN (C)}.$

Joint *C* (Fig. *c*)

$\xrightarrow{+} \Sigma F_x = 0; \qquad F_{CD} = 0$

Axial Strain Energy. $A = 2500 \text{ mm}^2 = 2.5(10^{-3}) \text{ m}^2$ and $L_{AD} = \sqrt{1.5^2 + 2} = 2.5$ m.

$$(U_i)_a = \Sigma\frac{N^2L}{2AE} = \frac{1}{2[2.5(10^{-3})][200(10^9)]}\left\{[15(10^3)]^2(2) + [18.75(10^3)]^2(2.5) + [11.25(10^3)]^2\,(1.5 \text{ m})\right\}$$

$$= 1.51875 \text{ J}$$

External Work. The external work done by the 15-kN force is

$$U_e = \frac{1}{2}P\Delta = \frac{1}{2}[15\,(10^3)]\,(\Delta_h)_B = 7.5(10^3)(\Delta_h)_B$$

Conservation of Energy.

$$U_e = (U_i)_a$$

$$7.5(10^3)(\Delta_h)_B = 1.51875$$

$$(\Delta_h)_B = 0.2025(10^{-3}) = 0.2025 \text{ mm} \qquad \textbf{Ans.}$$

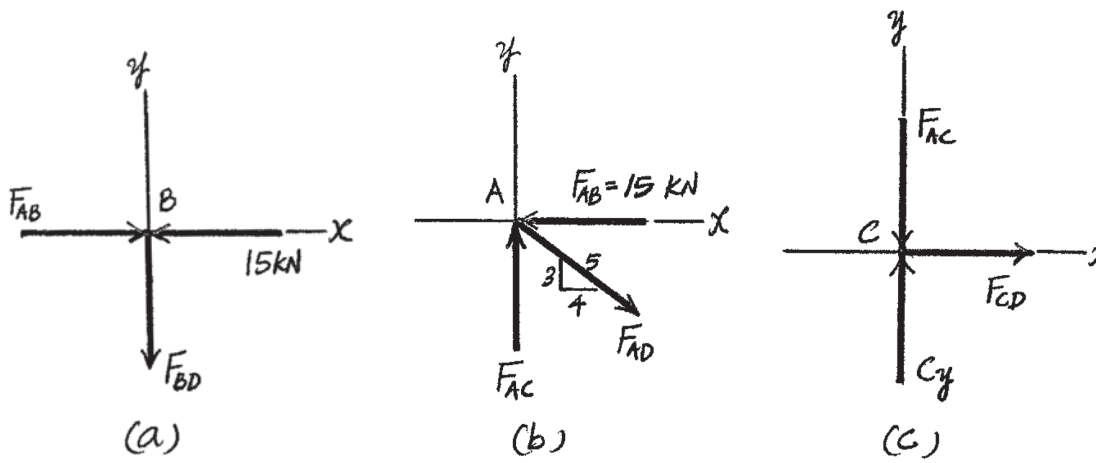

Ans:
$(\Delta_B)_h = 0.2025$ mm

14–26. Determine the vertical displacement of joint C. AE is constant.

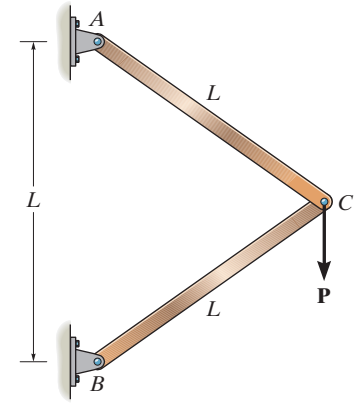

Joint C:

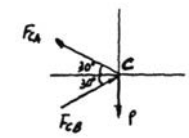

$\xrightarrow{+} \Sigma F_x = 0 \qquad F_{CB}\cos 30° - F_{CA}\cos 30° = 0$

$$F_{CB} = F_{CA}$$

$+\uparrow \Sigma F_y = 0 \qquad F_{CA}\sin 30° + F_{CB}\sin 30° - P = 0$

$$F_{CB} = F_{CA} = P$$

Conservation of Energy:

$$U_e = U_i$$

$$\frac{1}{2}P\Delta_C = \Sigma\frac{N^2L}{2EA}$$

$$\frac{1}{2}P\Delta_C = \frac{L}{2EA}[F_{CB}^2 + F_{CA}^2]$$

$$P\Delta_C = \frac{L}{EA}(P^2 + P^2)$$

$$\Delta_C = \frac{2PL}{AE}$$ **Ans.**

Ans:

$(\Delta_C)_v = \dfrac{2PL}{AE}$

14–27. Determine the horizontal displacement of joint A. The members of the truss are A992 steel rods, each having a diameter of 2 in.

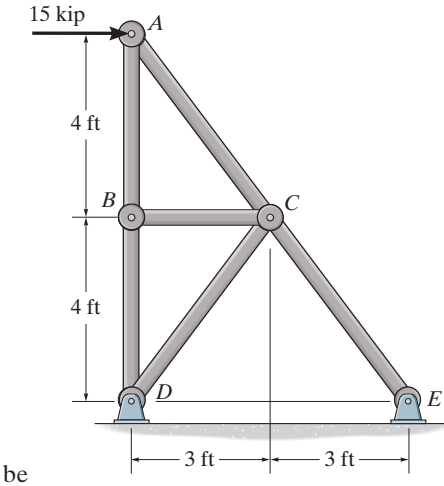

Normal Forces. The normal forces developed in each member of the truss can be determined using method of joints.

Joint A (Fig. a)

$\xrightarrow{+} \Sigma F_x = 0; \qquad F_{AC}\left(\frac{3}{5}\right) - 15 = 0 \qquad F_{AC} = 25 \text{ kip (C)}$

$+\uparrow \Sigma F_y = 0; \qquad 25\left(\frac{4}{5}\right) - F_{AB} = 0 \qquad F_{AB} = 20 \text{ kip (T)}$

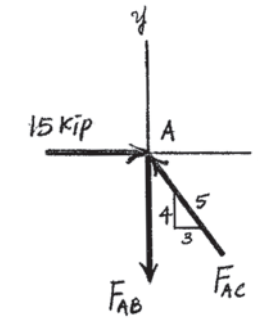

(a)

Joint B (Fig. b)

$\xrightarrow{+} \Sigma F_x = 0; \qquad F_{BC} = 0$

$+\uparrow \Sigma F_y = 0; \qquad 20 - F_{BD} = 0 \qquad F_{BD} = 20 \text{ kip (T)}$

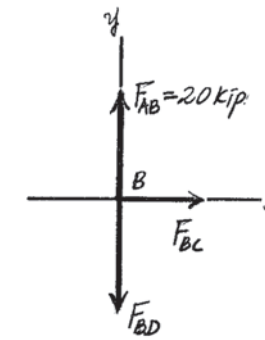

(b)

Joint C (Fig. c)

$+\nearrow \Sigma F_{x'} = 0; \qquad F_{CD} = 0$

$+\nwarrow \Sigma F_{y'} = 0; \qquad F_{CE} - 25 = 0 \qquad F_{CE} = 25 \text{ kip (C)}$

Axial Strain Energy. $A = \frac{\pi}{4}(2^2) = \pi \text{ in}^2$ and $L_{AC} = L_{CE} = L_{CD} = \sqrt{3^2 + 4^2} =$ 5 ft.

$$(U_i)_a = \Sigma\frac{N^2L}{2AE} = \frac{1}{2(\pi)[29(10^3)]}[20^2(4)(12) + 25^2(5)(12) + 20^2(4)(12) + 25^2(5)(12)]$$

$$= 0.6224 \text{ in}\cdot\text{kip}$$

External Work. The external work done by the 15 kip force is

$$U_e = \frac{1}{2}P\Delta = \frac{1}{2}(15)(\Delta_h)_A = 7.5\,(\Delta_h)_A$$

Conservation of Energy.

$$U_e = (U_i)_a$$

$$7.5\,(\Delta_h)_A = 0.6224$$

$$(\Delta_h)_A = 0.08298 \text{ in} = 0.0830 \text{ in.} \qquad \textbf{Ans.}$$

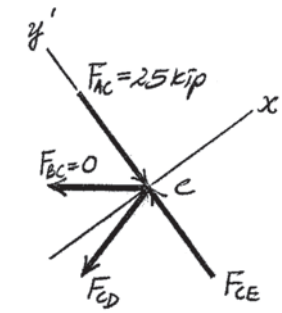

(c)

Ans:
$(\Delta_h)_A = 0.0830$ in.

***14–28.** Determine the vertical displacement of joint C. The members of the truss are 2014-T6 aluminum, 40 mm diameter rods.

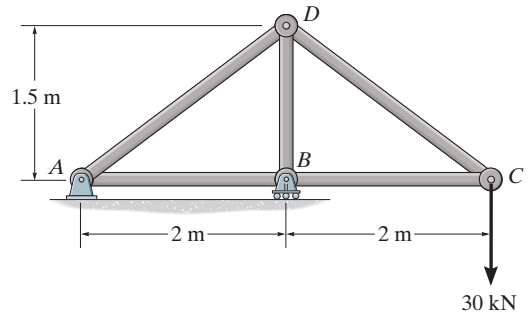

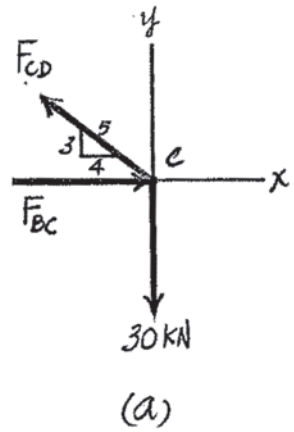

Normal Forces. The normal forces developed in each member of the truss can be determined using method of joints.

Joint C (Fig. a)

$$+\uparrow \Sigma F_y = 0; \qquad F_{CD}\left(\frac{3}{5}\right) - 30 = 0 \qquad F_{CD} = 50 \text{ kN (T)}$$

$$\overset{+}{\rightarrow} \Sigma F_x = 0; \qquad F_{BC} - 50\left(\frac{4}{5}\right) = 0 \qquad F_{BC} = 40 \text{ kN (C)}$$

Joint D (Fig. b)

$$\overset{+}{\rightarrow} \Sigma F_x = 0; \qquad 50\left(\frac{4}{5}\right) - F_{AD}\left(\frac{4}{5}\right) = 0 \qquad F_{AD} = 50 \text{ kN (T)}$$

$$+\uparrow \Sigma F_y = 0; \qquad F_{BD} - 50\left(\frac{3}{5}\right) - 50\left(\frac{3}{5}\right) = 0 \qquad F_{BD} = 60 \text{ kN (C)}$$

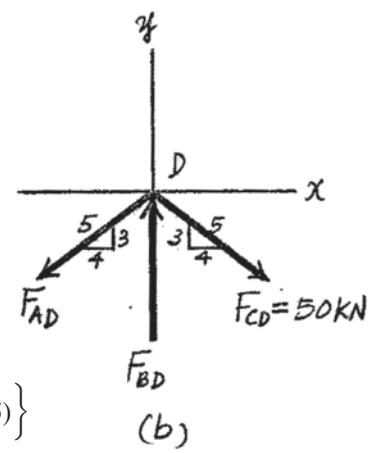

Joint B (Fig. c)

$$\overset{+}{\rightarrow} \Sigma F_x = 0; \qquad F_{AB} - 40 = 0 \qquad F_{AB} = 40 \text{ kN (C)}$$

Axial Strain Energy. $A = \frac{\pi}{4}(0.04^2) = 0.4(10^{-3})\pi \text{ m}^2$ and $L_{CD} = L_{AD} = \sqrt{1.5^2 + L^2} = 2.5$ m.

$$(U_i)_a = \Sigma\frac{N^2L}{2AE} = \frac{1}{2[0.4(10^{-3})\pi][73.1(10^9)]}\left\{2[50(10^3)]^2(2.5) + 2[40(10^3)]^2(2) + [60(10^3)]^2(1.5)\right\}$$

$$= 132.27 \text{ J.}$$

External Work. The external work done by the 30-kN force is

$$U_e = \frac{1}{2}P\Delta = \frac{1}{2}[30(10^3)](\Delta_C)_v = 15(10^3)(\Delta_C)_v$$

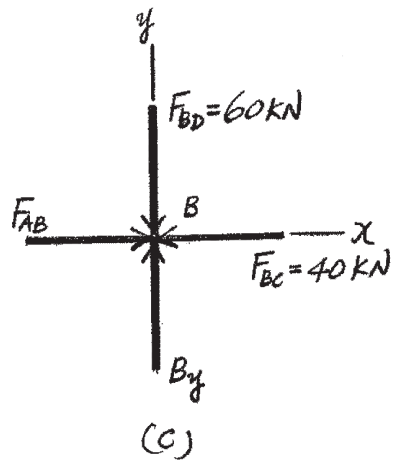

Conservation of Energy.

$$U_e = (U_i)_n$$

$$15(10^3)(\Delta_C)_r = 132.27$$

$$(\Delta_C)_r = 8.818(10^{-3}) \text{ m} = 8.82 \text{ mm} \qquad \textbf{Ans.}$$

14–29. Determine the displacement of point B on the A992 steel beam. $I = 250\ \text{in}^4$.

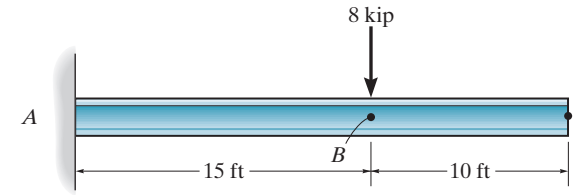

$$U_i = \int_0^L \frac{M^2 dx}{2EI} = \frac{1}{2EI}\int_0^{15(12)} (8x)^2\, dx = \frac{62208000}{EI}$$

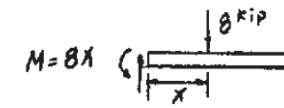

$$U_e = \frac{1}{2}P\Delta_B = \frac{1}{2}(8)\Delta_B = 4\Delta_B$$

Conservation of Energy:

$$U_e = U_i$$

$$4\Delta_B = \frac{62208000}{EI}$$

$$\Delta_B = \frac{15552000}{EI} = \frac{15552000}{29(10^3)(250)} = 2.15\ \text{in.}$$ **Ans.**

Ans:
$\Delta_B = 2.15$ in.

14–30. Determine the vertical displacement of end B of the cantilevered 6061-T6 aluminum alloy rectangular beam. Consider both shearing and bending strain energy.

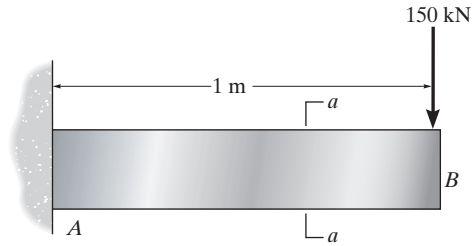

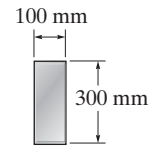

Section $a - a$

Internal Loadings. Referring to the FBD of beam's right cut segment, Fig. a,

$$+\uparrow \Sigma F_y = 0; \qquad V - 150(10^3) = 0 \qquad V = 150(10^3)\ N$$

$$\circlearrowleft + \Sigma M_0 = 0; \qquad -M - 150(10^3)\,x = 0 \qquad M = -150(10^3)x$$

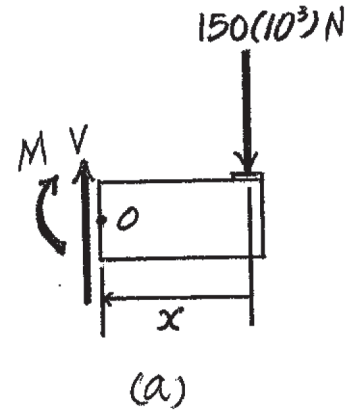

Shearing Strain Energy. For the rectangular beam, the form factor is $f_s = \frac{6}{5}$.

$$(U_i)_v = \int_0^L \frac{f_s V^2 dx}{2GA} = \int_0^{1\text{ m}} \frac{\frac{6}{5}[150(10^3)]^2 dx}{2[26(10^9)][0.1(0.3)]} = 17.31\text{ J}$$

Bending Strain Energy. $I = \frac{1}{12}(0.1)(0.3^3) = 0.225(10^{-3})\text{ m}^4$. We obtain

$$(U_i)_b = \int_0^L \frac{M^2 dx}{2EI} = \int_0^{1\text{ m}} \frac{[-150(10^3)x]^2 dx}{2[68.9(10^9)][0.225(10^{-3})]}$$

$$= 725.689 \int_0^{1\text{ m}} x^2\, dx$$

$$= 725.689 \left(\frac{x^3}{3}\right)\Bigg|_0^{1\text{ m}}$$

$$= 241.90\text{ J}$$

Thus, the strain energy stored in the beam is

$$U_i = (U_i)_v + (U_i)_b$$

$$= 17.31 + 241.90$$

$$= 259.20\text{ J}$$

External Work. The work done by the external force $P = 150$ kN is

$$U_e = \frac{1}{2}P\Delta = \frac{1}{2}[150\,(10^3)]\,\Delta_B = 75(10^3)\,\Delta_B$$

Conservation of Energy.

$$U_e = U_i$$

$$75(10^3)\,\Delta_B = 259.20$$

$$\Delta_B = 3.456\,(10^{-3})\text{ m} = 3.46\text{ mm} \qquad \textbf{Ans.}$$

Ans:
$\Delta_B = 3.46$ mm

14–31. Determine the displacement of point B on the A992 steel beam. $I = 80(10^6)\ \text{mm}^4$.

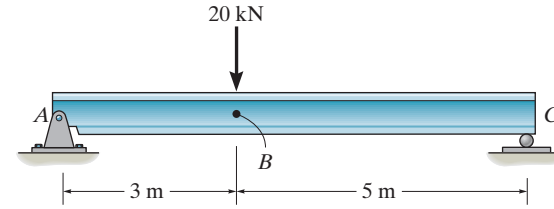

$$U_i = \int_0^L \frac{M^2 dx}{2EI} = \frac{1}{2EI}\left[\int_0^3 [(12.5)(10^3)(x_1)]^2 dx_1 + \int_0^3 [(7.5)(10^3)(x_2)]^2 dx_2\right] = \frac{1.875(10^9)}{EI}$$

$$U_e = \frac{1}{2}P\Delta = \frac{1}{2}(20)(10^3)\Delta_B = 10(10^3)\Delta_B$$

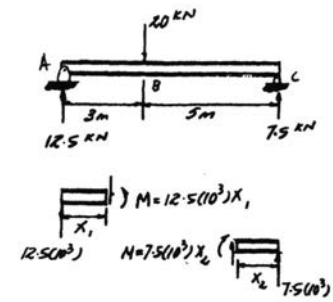

Conservation of energy:

$$U_e = U_i$$

$$10(10^3)\Delta_B = \frac{1.875(10^9)}{EI}$$

$$\Delta_B = \frac{187500}{EI} = \frac{187500}{200(10^9)(80)(10^{-6})} = 0.0117\ \text{m} = 11.7\ \text{mm}$$ **Ans.**

Ans:
$\Delta_B = 11.7\ \text{mm}$

***14–32.** Determine the slope at point A of the beam. EI is constant.

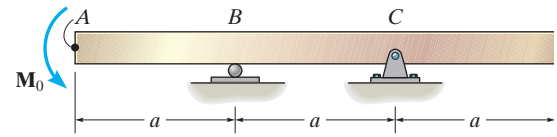

$$U_i = \int_0^L \frac{M^2 dx}{2EI} = \frac{1}{2EI}\left[\int_0^a (-M_0)^2 dx_1 + \int_0^a (0) dx_2 + \int_0^b \left(-\frac{M_0}{a}x_3\right)^2 dx_3\right]$$

$$= \frac{2M_0^2 a}{3EI}$$

$$U_e = \frac{1}{2}M\theta = \frac{1}{2}M_0\,\theta_A$$

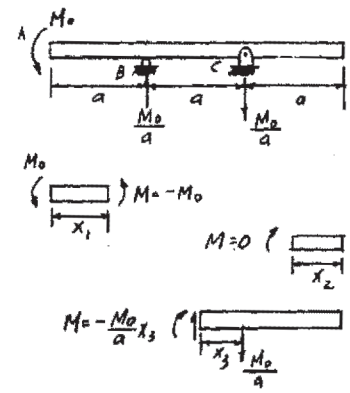

Conservation of Energy:

$$U_e = U_i$$

$$\frac{1}{2}M_0\,\theta_A = \frac{2M_0^2 a}{3EI}$$

$$\theta_A = \frac{4M_0\,a}{3EI} \qquad \textbf{Ans.}$$

14–33. The A992 steel bars are pin connected at C and D. If they each have the same rectangular cross section, with a height of 200 mm and a width of 100 mm, determine the vertical displacement at B. Neglect the axial load in the bars.

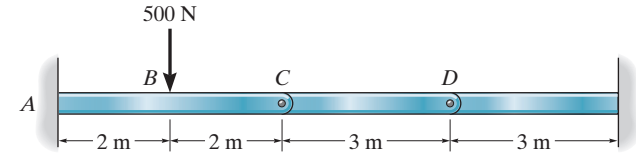

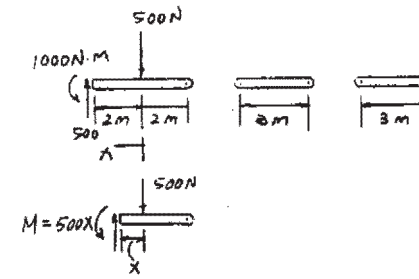

Internal Strain Energy:

$$U_i = \int_0^L \frac{M^2\,dx}{2\,EI} = \frac{1}{2\,EI}\int_0^{2\,\text{m}} [500\,x]^2\,dx = \frac{0.3333\,(10^6)}{EI}$$

External Work:

$$U_e = \frac{1}{2}\,P\,\Delta_B = \frac{1}{2}(500)\,\Delta_B = 250\,\Delta_B$$

Conservation of Energy:

$$U_e = U_i$$

$$250\,\Delta_B = \frac{0.3333\,(10^6)}{EI}$$

$$\Delta_B = \frac{1333.33}{EI} = \frac{1333.33}{200\,(10^9)\left(\frac{1}{12}\right)(0.1)(0.2^3)}$$

$$= 0.1\,(10^{-3})\text{ m} = 0.100\text{ mm}$$ **Ans.**

Ans:
$\Delta_B = 0.100$ mm

14–34. The A992 steel bars are pin connected at C. If they each have a diameter 2 in., determine the displacement at E.

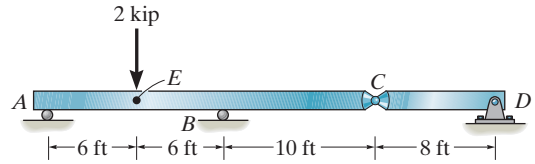

$$U_i = \int_0^L \frac{M^2\,dx}{2\,EI} = (2)\frac{1}{2EI}\int_0^{6(12)} (x_1)^2 dx_1 = \frac{124416}{EI}$$

$$U_e = \frac{1}{2}P\Delta = \frac{1}{2}(2)\,\Delta_E = \Delta_E$$

Conservation of Energy:

$$U_e = U_i$$

$$\Delta_E = \frac{124416}{EI} = \frac{124416}{29\,(10^3)\left(\frac{\pi}{4}\right)(1^4)} = 5.46 \text{ in.}$$ **Ans.**

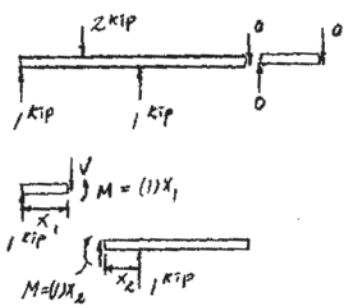

Ans:
$\Delta_g = 5.46$ in.

14–35. Determine the slope of the beam at the pin support A. Consider only bending strain energy. EI is constant.

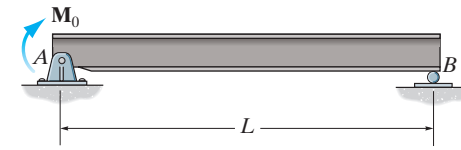

Support Reactions. Referring to the FBD of the entire beam, Fig. *a*,

$$\circlearrowleft + \Sigma M_A = 0; \qquad B_y L - M_0 = 0 \qquad B_y = \frac{M_0}{L}$$

Internal Moment. Referring to the FBD of the beam's right cut segment, Fig. *b*,

$$\circlearrowleft + \Sigma M_B = 0; \qquad \frac{M_0}{L}x - M = 0 \qquad M = \frac{M_0}{L}x$$

Bending Strain Energy.

$$(U_i)_b = \int_0^L \frac{M^2 dx}{2EI} = \int_0^L \frac{\left(\frac{M_0}{L}x\right)^2 dx}{2EI} = \frac{M_0^2}{2EIL^2}\int_0^L x^2 dx = \frac{M_0^2}{2EIL^2}\left(\frac{x^3}{3}\right)\Big|_0^L$$

$$= \frac{M_0^2 L}{6EI}$$

External Work. The external work done by $\mathbf{M}_0$ is

$$U_e = \frac{1}{2}M_0\theta_A$$

Conservation of Energy.

$$U_e = (U_i)_b$$

$$\frac{1}{2}M_0\theta_A = \frac{M_0^2 L}{6EI}$$

$$\theta_A = \frac{M_0 L}{3EI} \qquad \textbf{Ans.}$$

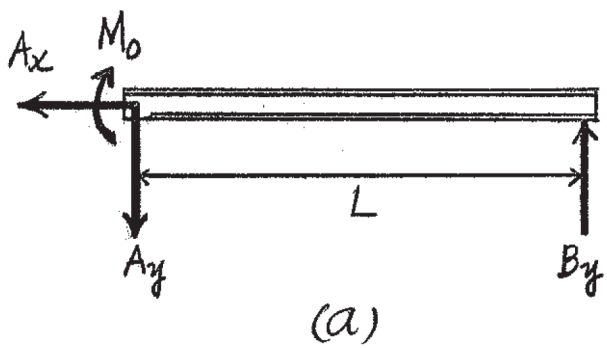

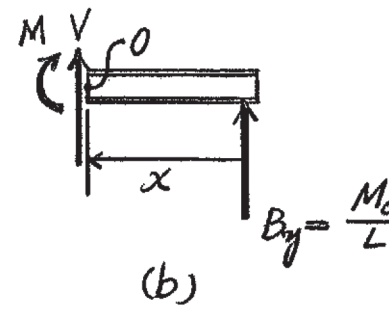

Ans:

$$\theta_A = -\frac{M_0 L}{3EI}$$

***14–36.** The curved rod has a diameter d. Determine the vertical displacement of end B of the rod. The rod is made of material having a modulus of elasticity of E. Consider only bending strain energy.

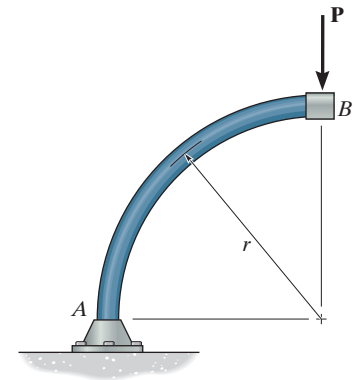

Internal Moment. Referring to the FBD of the upper cut segment of the rod, Fig. a,

$$\circlearrowleft + \Sigma M_0 = 0; \qquad M - Pr\sin\theta = 0 \qquad M = Pr\sin\theta$$

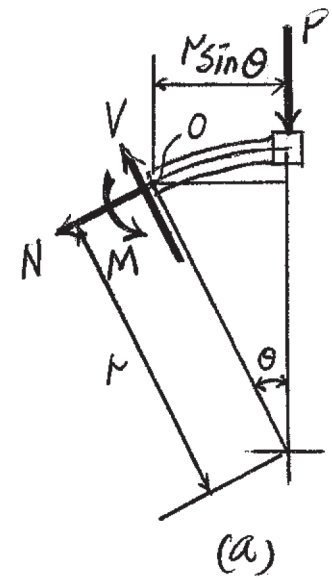

Bending Strain Energy. $I = \frac{\pi}{4}\left(\frac{d}{2}\right)^4 = \frac{\pi}{64}d^4$. We obtain

$$(U_i)_b = \int_0^s \frac{M^2 ds}{2EI} = \int_0^{\frac{\pi}{2}} \frac{(Pr\sin\theta)^2 r d\theta}{2E\left(\frac{\pi}{64}d^4\right)}$$

$$= \frac{32P^2r^3}{\pi d^4 E}\int_0^{\frac{\pi}{2}} \sin^2\theta\, d\theta$$

$$= \frac{16P^2r^3}{\pi d^4 E}\int_0^{\frac{\pi}{2}} (1-\cos 2\theta)\, d\theta$$

$$= \frac{16P^2r^3}{\pi d^4 E}\left(\theta - \frac{1}{2}\sin 2\theta\right)\Big|_0^{\frac{\pi}{2}}$$

$$= \frac{8P^2r^3}{d^4 E}$$

External Work. The work done by the external force **P** is

$$U_e = \frac{1}{2}P\,\Delta_B$$

Conservation of Energy.

$$U_e = U_i$$

$$\frac{1}{2}P\,\Delta_B = \frac{8P^2r^3}{d^4E}$$

$$\Delta_B = \frac{16Pr^3}{d^4E} \qquad \textbf{Ans.}$$

14–37. The load **P** causes the open coils of the spring to make an angle θ with the horizontal when the spring is stretched. Show that for this position this causes a torque $T = PR\cos\theta$ and a bending moment $M = PR\sin\theta$ at the cross section. Use these results to determine the maximum normal stress in the material.

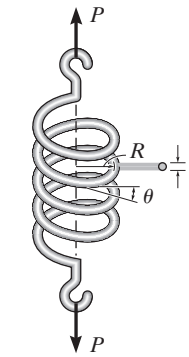

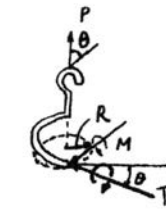

$T = P\,R\cos\theta; \qquad M = P\,R\sin\theta$

Bending:

$$\sigma_{\max} = \frac{Mc}{I} = \frac{P\,R\sin\theta\,d}{2\left(\frac{\pi}{4}\right)\left(\frac{d^4}{16}\right)}$$

$$\tau_{\max} = \frac{Tc}{J} = \frac{P\,R\cos\theta\,\frac{d}{2}}{\frac{\pi}{2}\left(\frac{d^4}{16}\right)}$$

$$\sigma_{\max} = \frac{\sigma_x + \sigma_y}{2} \pm \sqrt{\left(\frac{\sigma_x - \sigma_y}{2}\right)^2 + \tau_{xy}^2}$$

$$= \frac{16\,P\,R\sin\theta}{\pi\,d^3} \pm \sqrt{\left(\frac{16\,P\,R\sin\theta}{\pi d^3}\right)^2 + \left(\frac{16\,P\,R\cos\theta}{\pi\,d^3}\right)^2}$$

$$= \frac{16\,P\,R}{\pi\,d^3}\,[\sin\theta + 1] \qquad \textbf{Ans.}$$

Ans:

$$\sigma_{\max} = \frac{16PR}{\pi d^3}(\sin\theta + 1)$$

14–38. The coiled spring has n coils and is made from a material having a shear modulus G. Determine the stretch of the spring when it is subjected to the load **P**. Assume that the coils are close to each other so that $\theta \approx 0°$ and the deflection is caused entirely by the torsional stress in the coil.

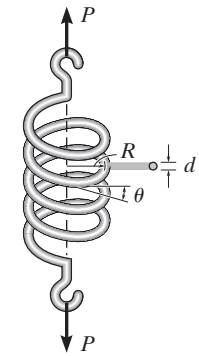

Bending Strain Energy: Applying 14–22, we have

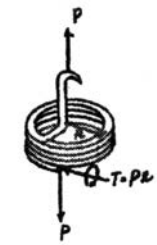

$$U_i = \frac{T^2 L}{2GJ} = \frac{P^2 R^2 L}{2G\left[\frac{\pi}{32}(d^4)\right]} = \frac{16P^2R^2L}{\pi d^4 G}$$

However, $L = n(2\pi R) = 2n\pi R$. Then

$$U_i = \frac{32nP^2R^3}{d^4G}$$

External Work: The external work done by force ***P*** is

$$U_e = \frac{1}{2}P\Delta$$

Conservation of Energy:

$$U_e = U_i$$

$$\frac{1}{2}P\Delta = \frac{32nP^2R^3}{d^4G}$$

$$\Delta = \frac{64nPR^3}{d^4G} \qquad \textbf{Ans.}$$

Ans:

$$\Delta = \frac{64nPR^3}{d^4G}$$

14–39. The pipe assembly is fixed at A. Determine the vertical displacement of end C of the assembly. The pipe has an inner diameter of 40 mm and outer diameter of 60 mm and is made of A-36 steel. Neglect the shearing strain energy.

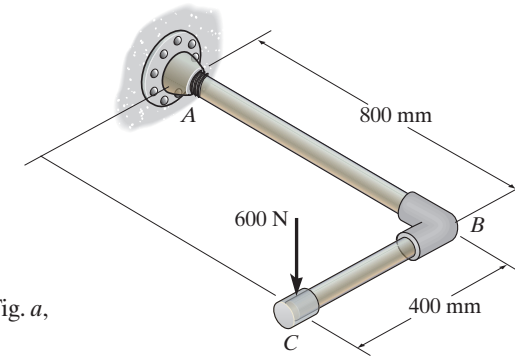

Internal Loading: Referring to the free-body diagram of the cut segment BC, Fig. a,

$\Sigma M_y = 0;\ M_y + 600x = 0 \qquad M_y = -600x$

Referring to the free-body diagram of the cut segment AB, Fig. b,

$\Sigma M_x = 0;\ M_x - 600y = 0 \qquad M_x = 600y$

$\Sigma M_y = 0;\ 600(0.4) - T_y = 0 \qquad T_y = 240\ \text{N}\cdot\text{m}$

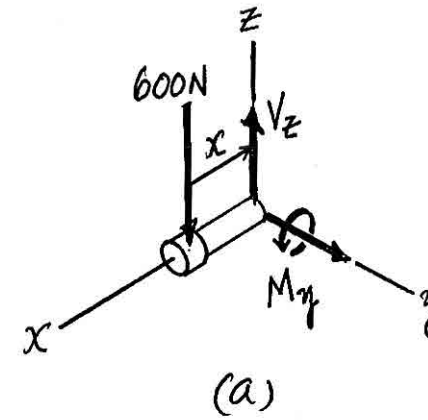

Torsional Strain Energy. $J = \frac{\pi}{2}\left(0.03^4 - 0.02^4\right) = 0.325\left(10^{-6}\right)\pi\ \text{m}^4$. We obtain

$$(U_i)_t = \int_0^L \frac{T^2 dx}{2GJ} = \int_0^{0.8\ \text{m}} \frac{240^2 dx}{2\left[75\left(10^9\right)\right]\left[0.325\left(10^{-6}\right)\pi\right]} = 0.3009\ \text{J}$$

Bending Strain Energy. $I = \frac{\pi}{4}\left(0.03^4 - 0.02^4\right) = 0.1625\left(10^{-6}\right)\pi\ \text{m}^4$. We obtain

$$(U_i)_b = \int_0^L \frac{M^2 dx}{2EI} = \frac{1}{2EI}\left[\int_0^{0.4\ \text{m}} (-600x)^2\, dx + \int_0^{0.8\ \text{m}} (600y)^2\, dy\right]$$

$$= \frac{1}{2EI}\left[120\left(10^3\right)x^3\Big|_0^{0.4\ \text{m}} + 120\left(10^3\right)y^3\Big|_0^{0.8\ \text{m}}\right]$$

$$= \frac{34\ 560\ \text{N}^2\cdot\text{m}^3}{EI}$$

$$= \frac{34\ 560}{200\left(10^9\right)\left[0.1625\left(10^{-6}\right)\pi\right]} = 0.3385\ \text{J}$$

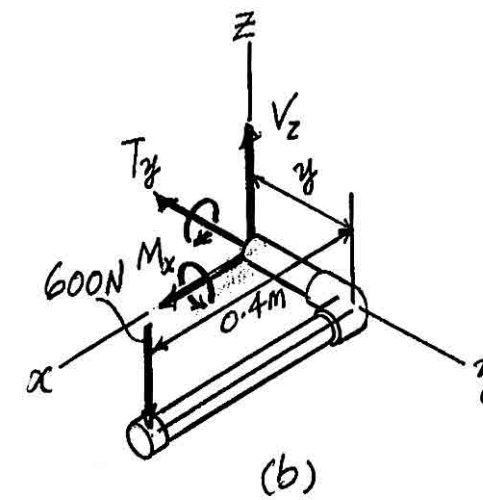

Thus, the strain energy stored in the pipe is

$$U_i = (U_i)_t + (U_i)_b$$

$$= 0.3009 + 0.3385$$

$$= 0.6394\ \text{J}$$

External Work. The work done by the external force $P = 600$ N is

$$U_e = \frac{1}{2}P\Delta = \frac{1}{2}(600)\Delta_C = 300\Delta_C$$

Conservation of Energy.

$$U_e = U_t$$

$$300\Delta_C = 0.6394$$

$$\Delta_C = 2.1312\left(10^{-3}\right) = 2.13\ \text{mm} \qquad \textbf{Ans.}$$

Ans:
$(\Delta_C)_v = 2.13$ mm

***14–40.** The rod has a circular cross section with a moment of inertia I. If a vertical force **P** is applied at A, determine the vertical displacement at this point. Only consider the strain energy due to bending. The modulus of elasticity is E.

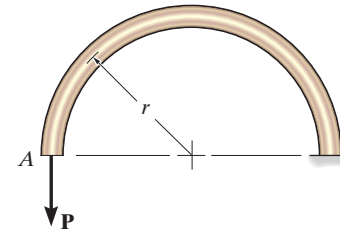

Moment Function:

$$\circlearrowleft + \Sigma M_B = 0; \qquad P[r(1 - \cos\theta)] - M = 0; \qquad M = Pr(1 - \cos\theta)$$

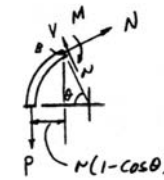

Bending Strain Energy:

$$U_i = \int_0^s \frac{M^2\,ds}{2EI} \qquad ds = r\,d\theta$$

$$= \int_0^\theta \frac{M^2 r\,d\theta}{2EI} = \frac{r}{2EI}\int_0^\pi [P\,r(1 - \cos\theta)]^2 d\theta$$

$$= \frac{P^2r^3}{2EI}\int_0^\pi (1 + \cos^2\theta - 2\cos\theta)\,d\theta$$

$$= \frac{P^2r^3}{2EI}\int_0^\pi \left(1 + \frac{1}{2} + \frac{\cos 2\theta}{2} - 2\cos\theta\right)d\theta$$

$$= \frac{P^2r^3}{2EI}\int_0^\pi \left(\frac{3}{2} + \frac{\cos 2\theta}{2} - 2\cos\theta\right)d\theta = \frac{P^2r^3}{2EI}\left(\frac{3}{2}\pi\right) = \frac{3\pi P^2r^3}{4EI}$$

Conservation of Energy:

$$U_e = U_i; \qquad \frac{1}{2}P\,\Delta_A = \frac{3\pi P^2r^3}{4EI}$$

$$\Delta_A = \frac{3\pi Pr^3}{2EI}$$ **Ans.**

14–41. Determine the vertical displacement of end B of the frame. Consider only bending strain energy. The frame is made using two A-36 steel W460 × 68 wide-flange sections.

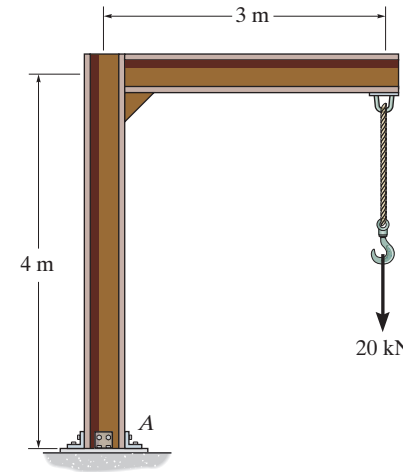

Internal Loading. Using the coordinates x_1 and x_2, the free-body diagrams of the frame's segments in Figs. *a* and *b* are drawn. For coordinate x_1,

$$\circlearrowleft + \Sigma M_O = 0; \qquad -M_1 - 20\left(10^3\right)x_1 = 0 \qquad M_1 = -20\left(10^3\right)x_1$$

For coordinate x_2,

$$\circlearrowleft + \Sigma M_O = 0; \qquad M_2 - 20\left(10^3\right)(3) = 0 \qquad M_2 = 60\left(10^3\right)\text{N}\cdot\text{m}$$

Bending Strain Energy.

$$(U_b)_i = \int_0^L \frac{M^2 dx}{2EI} = \frac{1}{2EI}\left[\int_0^{3\text{ m}}\left[-20\left(10^3\right)x_1\right]^2 dx_1 + \int_0^{4\text{ m}}\left[60\left(10^3\right)\right]^2 dx_2\right]$$

$$= \frac{1}{2EI}\left[\left(\frac{400\left(10^6\right)}{3}x_1{}^3\right)\Bigg|_0^{3\text{ m}} + 3.6\left(10^9\right)x\Bigg|_0^{4\text{ m}}\right]$$

$$= \frac{9\left(10^9\right)\text{N}^2\cdot\text{m}^3}{EI}$$

For a W460 × 68, $I = 297\left(10^6\right)\text{mm}^4 = 297\left(10^{-6}\right)\text{ m}^4$. Then

$$(U_b)_i = \frac{9\left(10^9\right)}{200\left(10^9\right)(297)\left(10^{-6}\right)} = 151.52\text{ J}$$

External Work. The work done by the external force $P = 20$ kN is

$$U_e = \frac{1}{2}P\Delta = \frac{1}{2}\left[20\left(10^3\right)\right]\Delta_B = 10\left(10^3\right)\Delta_B$$

Conservation of Energy.

$$U_e = U_i$$

$$10\left(10^3\right)\Delta_B = 151.52$$

$$\Delta_B = 0.01515\text{ m} = 15.2\text{ mm} \qquad \textbf{Ans.}$$

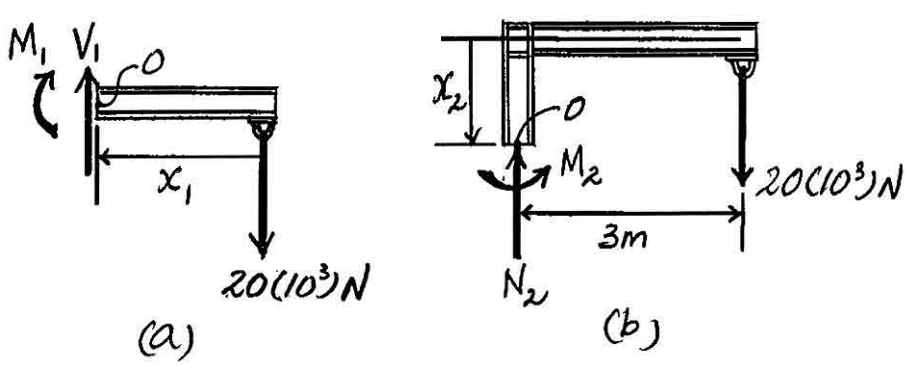

Ans:
$(\Delta_B)_v = 15.2$ mm

14–42. A bar is 4 m long and has a diameter of 30 mm. If it is to be used to absorb energy in tension from an impact loading, determine the total amount of elastic energy that it can absorb if (a) it is made of steel for which $E_{st} = 200$ GPa, $\sigma_Y = 800$ MPa, and (b) it is made from an aluminum alloy for which $E_{al} = 70$ GPa, $\sigma_Y = 405$ MPa.

a) $\epsilon_Y = \dfrac{\sigma_Y}{E} = \dfrac{800(10^6)}{200(10^9)} = 4(10^{-3})$ m/m

$$u_r = \frac{1}{2}(\sigma_Y)(\epsilon_Y) = \frac{1}{2}(800)(10^6)(\text{N/m}^2)(4)(10^{-3})\ \text{m/m} = 1.6\ \text{MJ/m}^3$$

$$V = \frac{\pi}{4}(0.03)^2(4) = 0.9(10^{-3})\pi\ \text{m}^2$$

$$u_i = 1.6(10^6)(0.9)(10^{-3})\pi = 4.52\ \text{kJ}$$ **Ans.**

b)

$$\epsilon_Y = \frac{\sigma_Y}{E} = \frac{405(10^6)}{70(10^9)} = 5.786(10^{-3})\ \text{m/m}$$

$$U_r = \frac{1}{2}(\sigma_Y)(\epsilon_Y) = \frac{1}{2}(405)(10^6)(\text{N/m}^2)(5.786)(10^{-3})\ \text{m/m} = 1.172\ \text{MJ/m}^3$$

$$V = \frac{\pi}{4}(0.03)^2(4) = 0.9(10^{-3})\pi\ \text{m}^3$$

$$U_i = 1.172(10^6)(0.9)(10^{-3})\pi = 3.31\ \text{kJ}$$ **Ans.**

Ans:
(a) $U_i = 4.52$ kJ
(b) $U_i = 3.31$ kJ

14–43. Determine the diameter of a red brass C83400 bar that is 8 ft long if it is to be used to absorb 800 ft · lb of energy in tension from an impact loading. No yielding occurs.

Elastic Strain Energy: The yielding axial force is $P_Y = \sigma_Y A$. Applying Eq. 14–16, we have

$$U_i = \frac{N^2 L}{2AE} = \frac{(\sigma_Y A)^2 L}{2AE} = \frac{\sigma_Y^2 AL}{2E}$$

Substituting, we have

$$U_i = \frac{\sigma_Y^2 AL}{2E}$$

$$0.8(12) = \frac{11.4^2\left[\frac{\pi}{4}(d^2)\right](8)(12)}{2[14.6(10^3)]}$$

$$d = 5.35 \text{ in.} \qquad \textbf{Ans.}$$

Ans:
$d = 5.35$ in.

***14–44.** Determine the speed v of the 50-Mg mass when it is just over the top of the steel post, if after impact, the maximun stress developed in the post is 550 MPa. The post has a length of $L = 1$ m and a cross-sectional area of 0.01 m^2. $E_{st} = 200$ GPa, $\sigma_Y = 600$ MPa.

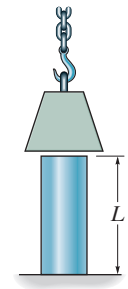

The Maximum Stress:

$$\sigma_{max} = \frac{P_{max}}{A}$$

$$550\,(10^6) = \frac{P_{max}}{0.01}; \qquad P_{max} = 5500 \text{ kN}$$

$$\Delta_{max} = \frac{P_{max}}{k} \qquad \text{Here} \quad k = \frac{AE}{L} = \frac{0.01(200)\,(10^9)}{1} = 2\,(10^9) \text{ N/m}$$

$$= \frac{5500\,(10^3)}{2\,(10^9)} = 2.75\,(10^{-3}) \text{ m}$$

Conservation of Energy:

$$U_e = U_i$$

$$\frac{1}{2}mv^2 + W\,\Delta_{max} = \frac{1}{2}k\,\Delta_{max}^2$$

$$\frac{1}{2}(50)\,(10^3)\,(v^2) + 50\,(10^3)\,(9.81)\,[2.75\,(10^{-3})] = \frac{1}{2}(2)\,(10^9)\,[2.75\,(10^{-3})]^2$$

$$v = 0.499 \text{ m/s}$$ **Ans.**

14–45. The collar has a weight of 50 lb and falls down the titanium bar. If the bar has a diameter of 0.5 in., determine the maximum stress developed in the bar if the weight is (a) dropped from a height of $h = 1$ ft, (b) released from a height $h \approx 0$, and (c) placed slowly on the flange at A. $E_{ti} = 16(10^3)$ ksi, $\sigma_Y = 60$ ksi.

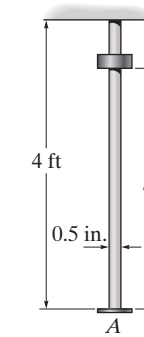

a)

$$\Delta_{st} = \frac{WL}{AE} = \frac{50(4)(12)}{\frac{\pi}{4}(0.5)^2(16)(10^6)} = 0.7639(10^{-3}) \text{ in.}$$

$$P_{max} = W\left[1 + \sqrt{1 + 2\left(\frac{h}{\Delta_{st}}\right)}\right] = 50\left[1 + \sqrt{1 + 2\left(\frac{(1)(12)}{0.7639(10^{-3})}\right)}\right] = 8912 \text{ lb}$$

$$\sigma_{max} = \frac{P_{max}}{A} = \frac{8912}{\frac{\pi}{4}(0.5)^2} = 45390 \text{ psi} = 45.4 \text{ ksi} < \sigma_Y \qquad \textbf{Ans.}$$

b)

$$P_{max} = W\left[1 + \sqrt{1 + 2\left(\frac{h}{\Delta_{st}}\right)}\right] = 50[1 + \sqrt{1 + 2(0)}] = 100 \text{ lb}$$

$$\sigma_{max} = \frac{P_{max}}{A} = \frac{100}{\frac{\pi}{4}(0.5)^2} = 509 \text{ psi} < \sigma_Y \qquad \textbf{Ans.}$$

c)

$$\sigma_{max} = \frac{W}{A} = \frac{50}{\frac{\pi}{4}(0.5)^2} = 254 \text{ psi} < \sigma_Y \qquad \textbf{Ans.}$$

Ans:
(a) $\sigma_{max} = 45.4$ ksi
(b) $\sigma_{max} = 509$ psi
(c) $\sigma_{max} = 254$ psi

14–46. The collar has a weight of 50 lb and falls down the titanium bar. If the bar has a diameter of 0.5 in., determine the largest height h at which the weight can be released and not permanently damage the bar after striking the flange at A. $E_{ti} = 16(10^3)$ ksi, $\sigma_Y = 60$ ksi.

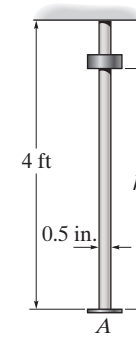

$$\Delta_{st} = \frac{WL}{AE} = \frac{50(4)(12)}{\frac{\pi}{4}(0.5)^2(16)(10^6)} = 0.7639(10^{-3}) \text{ in.}$$

$$P_{max} = W\left[1 + \sqrt{1 + 2\left(\frac{h}{\Delta_{st}}\right)}\right]$$

$$60(10^3)\left(\frac{\pi}{4}\right)(0.5^2) = 50\left[1 + \sqrt{1 + 2\left(\frac{h}{0.7639(10^{-3})}\right)}\right]$$

$$235.62 = 1 + \sqrt{1 + 2618h}$$

$$h = 21.03 \text{ in.} = 1.75 \text{ ft}$$ **Ans.**

Ans:
$h = 1.75$ ft

14–47. A steel cable having a diameter of 0.4 in. wraps over a drum and is used to lower an elevator having a weight of 800 lb. The elevator is 150 ft below the drum and is descending at the constant rate of 2 ft/s when the drum suddenly stops. Determine the maximum stress developed in the cable when this occurs. $E_{st} = 29(10^3)$ ksi, $\sigma_Y = 50$ ksi.

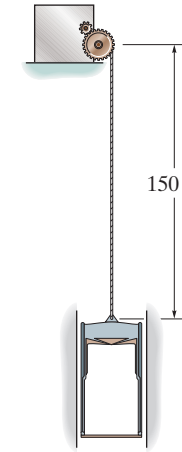

$$k = \frac{AE}{L} = \frac{\frac{\pi}{4}(0.4^2)(29)(10^3)}{150(12)} = 2.0246 \text{ kip/in.}$$

$$U_e = U_i$$

$$\frac{1}{2}mv^2 + W\,\Delta_{max} = \frac{1}{2}k\,\Delta_{max}^2$$

$$\frac{1}{2}\left[\frac{800}{32.2(12)}\right][(12)(2)]^2 + 800\,\Delta_{max} = \frac{1}{2}(2.0246)(10^3)\Delta_{max}^2$$

$$596.27 + 800\,\Delta_{max} = 1012.29\,\Delta_{max}^2$$

$$\Delta_{max} = 1.2584 \text{ in.}$$

$$P_{max} = k\,\Delta_{max} = 2.0246(1.2584) = 2.5477 \text{ kip}$$

$$\sigma_{max} = \frac{P_{max}}{A} = \frac{2.5477}{\frac{\pi}{4}(0.4)^2} = 20.3 \text{ ksi} < \sigma_Y \qquad \text{OK} \qquad \textbf{Ans.}$$

Ans:
$\sigma_{max} = 20.3$ ksi

***14–48.** A steel cable having a diameter of 0.4 in. wraps over a drum and is used to lower an elevator having a weight of 800 lb. The elevator is 150 ft below the drum and is descending at the constant rate of 3 ft/s. when the drum suddenly stops. Determine the maximum stress developed in the cable when this occurs. $E_{st} = 29(10^3)$ ksi, $\sigma_Y = 50$ ksi.

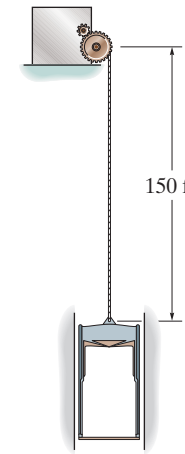

$$k = \frac{AE}{L} = \frac{\frac{\pi}{4}(0.4^2)(29)(10^3)}{150(12)} = 2.0246 \text{ kip/in.}$$

$$U_e = U_i$$

$$\frac{1}{2}mv^2 + W\,\Delta_{max} = \frac{1}{2}k\,\Delta_{max}^2$$

$$\frac{1}{2}\left[\frac{800}{32.2(12)}\right][(12)(3)]^2 + 800\,\Delta_{max} = \frac{1}{2}(2.0246)(10^3)\Delta_{max}^2$$

$$1341.61 + 800\,\Delta_{max} = 1012.29\,\Delta_{max}^2$$

$$\Delta_{max} = 1.6123 \text{ in.}$$

$$P_{max} = k\,\Delta_{max} = 2.0246(1.6123) = 3.2643 \text{ kip}$$

$$\sigma_{max} = \frac{P_{max}}{A} = \frac{3.2643}{\frac{\pi}{4}(0.4)^2} = 26.0 \text{ ksi} < \sigma_Y \qquad \text{OK} \qquad \textbf{Ans.}$$

14–49. The steel beam AB acts to stop the oncoming railroad car, which has a mass of 10 Mg and is coasting towards it at $v = 0.5$ m/s. Determine the maximum stress developed in the beam if it is struck at its center by the car. The beam is simply supported and only horizontal forces occur at A and B. Assume that the railroad car and the supporting framework for the beam remain rigid. Also, compute the maximum deflection of the beam. $E_{st} = 200$ GPa, $\sigma_Y = 250$ MPa.

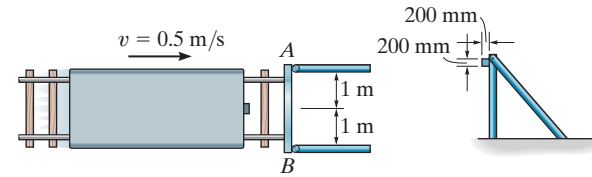

From Appendix C:

$$\Delta_{st} = \frac{PL^3}{48EI} = \frac{10(10^3)(9.81)(2^3)}{48(200)(10^9)(\frac{1}{12})(0.2)(0.2^3)} = 0.613125(10^{-3})\text{ m}$$

$$k = \frac{W}{\Delta_{st}} = \frac{10(10^3)(9.81)}{0.613125(10^{-3})} = 160(10^6)\text{ N/m}$$

$$\Delta_{\max} = \sqrt{\frac{\Delta_{st}\, v^2}{g}} = \sqrt{\frac{0.613125(10^{-3})(0.5^2)}{9.81}} = 3.953(10^{-3})\text{ m} = 3.95\text{ mm} \qquad \textbf{Ans.}$$

$$W' = k\Delta_{\max} = 160(10^6)(3.953)(10^{-3}) = 632455.53\text{ N}$$

$$M' = \frac{w'L}{4} = \frac{632455.53(2)}{4} = 316228\text{ N}\cdot\text{m}$$

$$\sigma_{\max} = \frac{M'c}{I} = \frac{316228(0.1)}{\frac{1}{12}(0.2)(0.2^3)} = 237\text{ MPa} < \sigma_Y \qquad \text{O.K.} \qquad \textbf{Ans.}$$

Ans:
$\Delta_{\max} = 3.95$ mm, $\sigma_{\max} = 237$ MPa

14–50. The aluminum bar assembly is made from two segments having diameters of 40 mm and 20 mm. Determine the maximum axial stress developed in the bar if the 10-kg collar is dropped from a height of $h = 150$ mm. Take $E_{al} = 70$ GPa, $\sigma_Y = 410$ MPa.

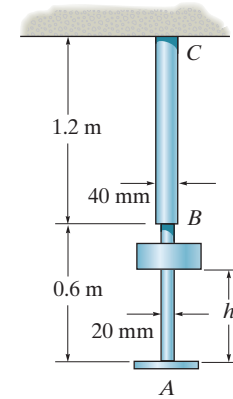

$$k_{AB} = \frac{A_{AB}E}{L_{AB}} = \frac{\pi\,(0.01^2)\left[70(10^9)\right]}{0.6} = 11.667(10^6)\,\pi \text{ N/m}$$

$$k_{BC} = \frac{A_{BC}E}{L_{BC}} = \frac{\pi\,(0.02^2)\left[70(10^9)\right]}{1.2} = 23.333\,(10^6)\,\pi \text{ N/m}$$

Equilibrium requires

$$F_{AB} = F_{BC}$$

$$k_{AB}\Delta_{AB} = k_{BC}\Delta_{BC}$$

$$11.667(10^6)\,\pi\,\Delta_{AB} = 23.333(10^6)\,\pi\,\Delta_{BC}$$

$$\Delta_{BC} = 0.5\,\Delta_{AB} \qquad \textbf{(1)}$$

$$U_e = U_i$$

$$mg\,(h + \Delta_{AB} + \Delta_{BC}) = \frac{1}{2}k_{AB}\,\Delta_{AB}^2 + \frac{1}{2}k_{BC}\,\Delta_{BC}^2 \qquad \textbf{(2)}$$

Substitute Eq. (1) into (2),

$$mg\,(h + \Delta_{AB} + 0.5\,\Delta_{AB}) = \frac{1}{2}k_{AB}\,\Delta_{AB}^2 + \frac{1}{2}k_{BC}\,(0.5\Delta_{AB})^2$$

$$mg\,(h + 1.5\Delta_{AB}) = \frac{1}{2}k_{AB}\,\Delta_{AB}^2 + 0.125\,k_{BC}\,\Delta_{AB}^2$$

$$10(9.81)(0.15 + 1.5\Delta_{AB}) = \frac{1}{2}\left[11.667(10^6)\pi\right]\Delta_{AB}^2 + 0.125\left[23.333(10^6)\pi\right]\Delta_{AB}^2$$

$$27.4889\,(10^6)\Delta_{AB}^2 - 147.15\,\Delta_{AB} - 14.715 = 0$$

$$\Delta_{AB} = 0.7343(10^{-3}) \text{ m}$$

The force developed in segment AB is $F_{AB} = k_{AB}\,\Delta_{AB} = \left[11.667(10^6)\pi\right]\left[0.7343(10^{-3})\right] = 26.915(10^3)$ N. Thus

$$\sigma_{max} = \sigma_{AB} = \frac{F_{AB}}{A_{AB}} = \frac{26.915(10^3)}{\pi\,(0.01^2)} = 85.67(10^6) \text{ Pa} = 85.7 \text{ MPa} \qquad \textbf{Ans.}$$

Since $\sigma_{max} < \sigma_Y = 410$ MPa, this result is valid.

Ans:
$\sigma_{max} = 85.7$ MPa

14–51. Rods AB and AC have a diameter of 20 mm and are made of 6061-T6 aluminum alloy. They are connected to the rigid collar A which slides freely along the vertical guide rod. If the 50-kg block D is dropped from height $h = 200$ mm above the collar, determine the maximum normal stress developed in the rods.

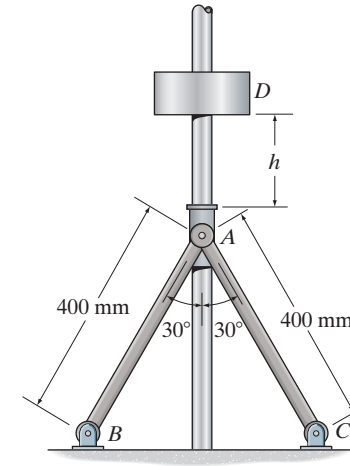

Equilibrium. Referring to the free-body diagram of joint A, Fig. a

$$\overset{+}{\rightarrow}\Sigma F_x = 0; \qquad F_{AB}\sin 30° - F_{AC}\sin 30° = 0 \qquad F_{AB} = F_{AC} = F$$

$$+\uparrow \Sigma F_y = 0; \qquad 2F\cos 30° - P_A = 0 \qquad P_A = 1.732F \qquad (1)$$

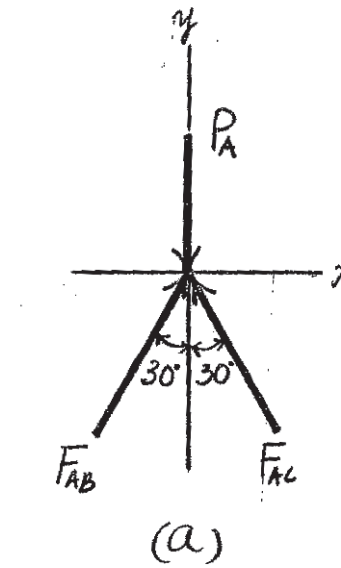

Compatibility Equation. From the geometry shown in Fig. b

$$\delta_F = \Delta_A \cos 30°$$

$$\frac{F(0.4)}{\frac{\pi}{4}(0.02^2)[68.9(10^9)]} = \Delta_A \cos 30°$$

$$\Delta_A = 21.3383(10^{-9})F$$

Thus, the equivalent spring constant for the system can be determined from

$$P_A = k\Delta_A$$

$$1.732F = k[21.3383(10^{-9})F]$$

$$k = 81.171(10^6)\ \text{N/m}$$

Conservation of Energy.

$$mg[h + (\Delta_A)_{\max}] = \frac{1}{2}k(\Delta_A)_{\max}^2$$

$$50(9.81)[0.2 + (\Delta_A)_{\max}] = \frac{1}{2}[81.171(10^6)](\Delta_A)_{\max}^2$$

$$40.5855(10^6)(\Delta_A)_{\max}^2 - 490.5(\Delta_A)_{\max} - 98.1 = 0$$

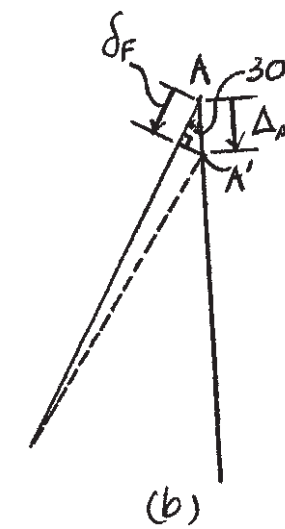

Solving for the positive root,

$$(\Delta_A)_{\max} = 1.5608(10^{-3})\ \text{m}$$

Then,

$$(P_A)_{\max} = k(\Delta_A)_{\max} = 81.171(10^6)[1.5608(10^{-3})] = 126.69(10^3)\ \text{N}$$

Maximum Stress. From Eq. (1),

$$(P_A)_{\max} = 1.732F_{\max}$$

$$F_{\max} = 73.143(10^3)\ \text{N}$$

Thus, the maximum normal stress developed in members AB and AC is

$$(\sigma_{\max})_{AB} = (\sigma_{\max})_{AC} = \frac{F_{\max}}{A} = \frac{73.143(10^3)}{\frac{\pi}{4}(0.02^2)} = 232.82\ \text{MPa} = 233\ \text{MPa} \qquad \textbf{Ans.}$$

Since $(\sigma_{\max})_{AB} = (\sigma_{\max})_{AC} < \sigma_Y = 255$ MPa, this result is valid.

Ans:
$(\sigma_{\max})_{AB} = (\sigma_{\max})_{AC} = 233$ MPa

***14–52.** Rods AB and AC have a diameter of 20 mm and are made of 6061-T6 aluminum alloy. They are connected to the rigid collar which slides freely along the vertical guide rod. Determine the maximum height h from which the 50-kg block D can be dropped without causing yielding in the rods when the block strikes the collar.

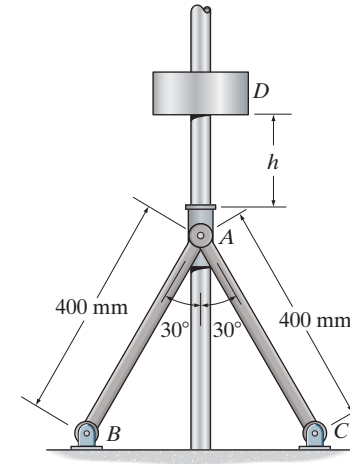

Equilibrium. Referring to the free-body diagram of joint A, Fig. a

$$\xrightarrow{+} \Sigma F_x = 0; \quad F_{AB}\sin 30° - F_{AC}\sin 30° = 0 \qquad F_{AB} = F_{AC} = F$$

$$+\uparrow \Sigma F_y = 0; \quad 2F\cos 30° - P_A = 0 \qquad P_A = 1.732F \qquad (1)$$

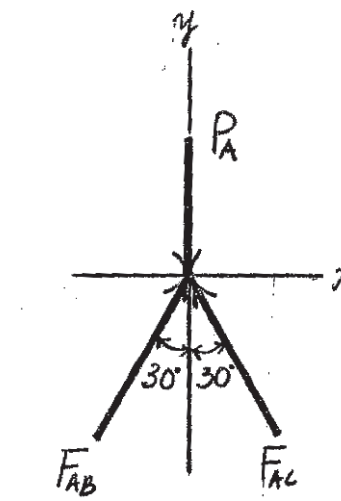

Compatibility Equation. From the geometry shown in Fig. b

$$\delta_F = \Delta_A \cos 30°$$

$$\frac{F(0.4)}{\frac{\pi}{4}(0.02^2)[68.9(10^9)]} = \Delta_A \cos 30°$$

$$\Delta_A = 21.3383(10^{-9})F$$

Thus, the equivalent spring constant for the system can be determined from

$$P_A = k\Delta_A$$

$$1.732F = k[21.3383(10^{-9})F]$$

$$k = 81.171(10^6)\ \text{N/m}$$

Maximum Stress. The maximum force that can be developed in members AB and AC is

$$F_{max} = \sigma_Y A = 255(10^6)\left[\frac{\pi}{4}(0.02^2)\right] = 80.11(10^3)\ \text{N}$$

From Eq. (1),

$$(P_A)_{max} = 1.732F_{max} = 1.732[80.11(10^3)] = 138.76(10^3)\ \text{N}$$

Then,

$$(\Delta_A)_{max} = \frac{(P_A)_{max}}{k} = \frac{138.76(10^3)}{81.171(10^6)} = 1.7094(10^{-3})\ \text{m}$$

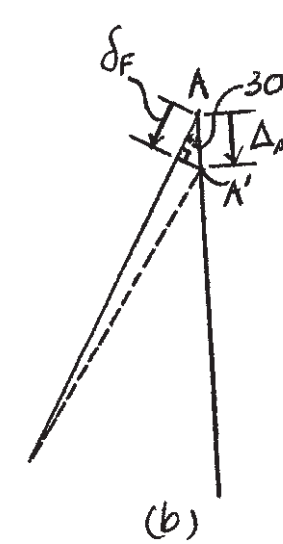

Conservation of Energy.

$$mg[h + (\Delta_A)_{max}] = \frac{1}{2}k(\Delta_A)_{max}^2$$

$$50(9.81)[h + 1.7094(10^{-3})] = \frac{1}{2}[81.171(10^6)][1.7094(10^{-3})]^2$$

$$h = 0.240\ \text{m} \qquad \textbf{Ans.}$$

14–53. The composite aluminum 2014-T6 bar is made from two segments having diameters of 7.5 mm and 15 mm. Determine the maximum axial stress developed in the bar if the 10-kg collar is dropped from a height of $h = 100$ mm.

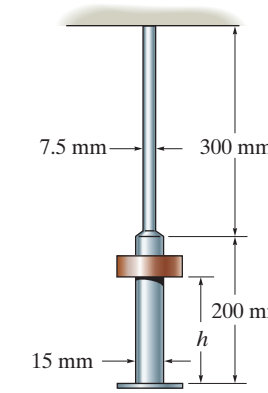

$$\Delta_{st} = \Sigma\frac{WL}{AE} = \frac{10(9.81)(0.3)}{\frac{\pi}{4}(0.0075)^2(73.1)(10^9)} + \frac{10(9.81)(0.2)}{\frac{\pi}{4}(0.015)^2(73.1)(10^9)}$$

$$= 10.63181147\,(10^{-6})\text{ m}$$

$$n = \left[1 + \sqrt{1 + 2\left(\frac{h}{\Delta_{st}}\right)}\right] = \left[1 + \sqrt{1 + 2\left(\frac{0.1}{10.63181147(10^{-6})}\right)}\right] = 138.16$$

$$\sigma_{max} = n\,\sigma_{st} \quad \text{Here } \sigma_{st} = \frac{W}{A} = \frac{10\,(9.81)}{\frac{\pi}{4}(0.0075^2)} = 2.22053\text{ MPa}$$

$$\sigma_{max} = 138.16\,(2.22053)$$

$$= 307\text{ MPa} < \sigma_Y = 414\text{ MPa} \qquad \text{OK}$$ **Ans.**

Ans:
$\sigma_{max} = 414$ MPa

14–54. The composite aluminum 2014-T6 bar is made from two segments having diameters of 7.5 mm and 15 mm. Determine the maximum height h from which the 10-kg collar should be dropped so that it produces a maximum axial sterss in the bar of $\sigma_{max} = 300$ MPa.

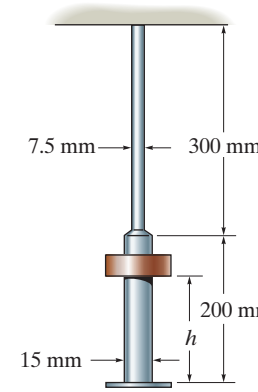

$$\Delta_{st} = \Sigma\frac{WL}{AE} = \frac{10(9.81)(0.3)}{\frac{\pi}{4}(0.0075)^2(73.1)(10^9)} + \frac{10(9.81)(0.2)}{\frac{\pi}{4}(0.015)^2(73.1)(10^9)}$$

$$= 10.63181147\,(10^{-6})\text{ m}$$

$$n = \left[1 + \sqrt{1 + 2\left(\frac{h}{\Delta_{st}}\right)}\right] = \left[1 + \sqrt{1 + 2\left(\frac{h}{10.63181147(10^{-6})}\right)}\right]$$

$$= \left[1 + \sqrt{1 + 188114.7\,h}\right]$$

$$\sigma_{max} = n\,\sigma_{st} \qquad \text{Here } \sigma_{st} = \frac{W}{A} = \frac{10\,(9.81)}{\frac{\pi}{4}(0.0075^2)} = 2.22053\text{ MPa}$$

$$300\,(10^6) = \left[1 + \sqrt{1 + 188114.7\,h}\right](2220530)$$

$$h = 0.09559\text{ m} = 95.6\text{ mm}$$ **Ans.**

Ans:
$h = 95.6$ mm

14–55. When the 100-lb block is at $h = 3$ ft above the cylindrical post and spring assembly, it has a speed of $v = 20$ ft/s. If the post is made of 2014-T6 aluminum and the spring has the stiffness of $k = 250$ kip/in., determine the required minimum diameter d of the post to the nearest $\frac{1}{8}$ in. so that it will not yield when it is struck by the block.

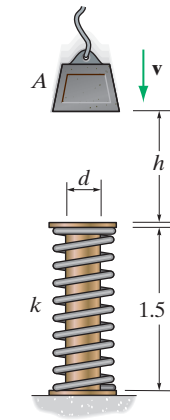

Maximum Stress. The equivalent spring constant for the post is $k_p = \dfrac{AE}{L} = \dfrac{\left(\frac{\pi}{4}d^2\right)\left[10.6\left(10^3\right)\right]}{1.5\,(12)} = 462.51\,d^2$. Then, the maximum force developed in the post is $P_{\max} = k_p\,\Delta_{\max} = 462.51d^2\,\Delta_{\max}$. Thus,

$$\sigma_{\max} = \sigma_Y = \frac{P_{\max}}{A}$$

$$60 = \frac{462.51d^2\,\Delta_{\max}}{\frac{\pi}{4}d^2}$$

$$\Delta_{\max} = 0.10189 \text{ in.}$$

Conservation of Energy.

$$U_e = U_i$$

$$\frac{1}{2}mv^2 + W(h + \Delta_{\max}) = \frac{1}{2}k_p\,\Delta_{\max}^2 + \frac{1}{2}k_{sp}\,\Delta_{\max}^2$$

$$\frac{1}{2}\left(\frac{100}{32.2}\right)(20^2)(12) + 100\,(36 + 0.10189) = \frac{1}{2}\left[462.51\,(10^3)\,d^2\right](0.10189^2) + \frac{1}{2}\left[250\,(10^3)\right](0.10189^2)$$

$$d = 2.017 \text{ in.}$$

Use $d = 2\frac{1}{8}$ in. **Ans.**

Ans:

Use $d = 2\frac{1}{8}$ in.

***14–56.** When the 100-lb block is at $h = 3$ ft above the cylindrical post and spring assembly, it has a speed of $v = 20$ ft/s. If the post is made of 2014-T6 aluminum and has a diameter of $d = 2$ in., determine the required minimum stiffness k of the spring so that the post will not yield when it is struck by the block.

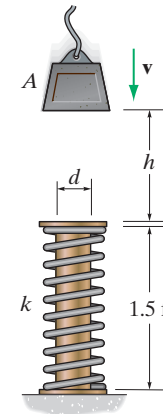

Maximum Stress. The equivalent spring constant for the post is $k_P = \dfrac{AE}{L} = \dfrac{\frac{\pi}{4}(2^2)\left[10.6(10^3)\right]}{1.5(12)} = 1850.05$ kip/in. Then, the maximum force developed in the post is $P_{\max} = k_P \Delta_{\max} = 1850.05\Delta_{\max}$. Thus,

$$\sigma_{\max} = \sigma_Y = \frac{P_{\max}}{A}$$

$$60 = \frac{1850.05\Delta_{\max}}{\frac{\pi}{4}(2^2)}$$

$$\Delta_{\max} = 0.10189 \text{ in.} \qquad \textbf{Ans.}$$

Conservation of Energy.

$$U_e = U_i$$

$$\frac{1}{2}mv^2 + W(h + \Delta_{\max}) = \frac{1}{2}k_P\Delta_{\max}^2 + \frac{1}{2}k_{\text{sp}}\Delta_{\max}^2$$

$$\frac{1}{2}\left(\frac{100}{32.2}\right)(20^2)(12) + 100(36 + 0.10189) = \frac{1}{2}[1850.05(10^3)](0.10189^2) + \frac{1}{2}k_{\text{sp}}(0.10189^2)$$

$$k_{\text{sp}} = 281\,478.15 \text{ lb/in} = 281 \text{ kip/in.} \qquad \textbf{Ans.}$$

14–57. When the 100-lb block is at $h = 3$ ft above the post and spring assembly, it has a speed of $v = 20$ ft/s. If the post has a diameter of $d = 2$ in., and is made of 2014-T6 aluminum, and the spring has a stiffness of $k = 500$ kip/in., determine the maximum normal stress developed in the post.

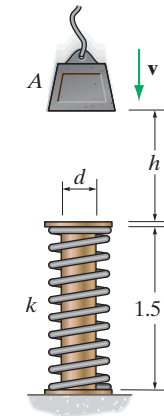

Conservation of Energy. The equivalent spring constant for the post is $k_P = \dfrac{AE}{L} = \dfrac{\frac{\pi}{4}(2)^2[10.6(10^3)]}{1.5(12)} = 1850.05$ kip/in. We have

$$U_e = U_i$$

$$\frac{1}{2}mv^2 + W(h + \Delta_{max}) = \frac{1}{2}k_P\Delta_{max}^2 + \frac{1}{2}k_{sp}\Delta_{max}^2$$

$$\frac{1}{2}\left(\frac{100}{32.2}\right)(20^2)(12) + 100(36 + \Delta_{max}) = \frac{1}{2}[1850.05(10^3)]\Delta_{max}^2 + \frac{1}{2}[500(10^3)]\Delta_{max}^2$$

$$1.1750(10^6)\Delta_{max}^2 - 100\Delta_{max} - 11053.42 = 0$$

Solving for the positive root,

$$\Delta_{max} = 0.09703 \text{ in.}$$

Maximum Stress. The maximum force developed in the post is $P_{max} = k_P\Delta_{max} = 1850.05(0.09703) = 179.51$ kip. Thus,

$$\sigma_{max} = \frac{P_{max}}{A} = \frac{179.51}{\frac{\pi}{4}(2^2)} = 57.1 \text{ ksi} \qquad \textbf{Ans.}$$

Since $\sigma_{max} < \sigma_Y = 60$ ksi, this result is valid.

Ans:
$\sigma_{max} = 57.1$ ksi

14–58. The tugboat has a weight of 120 000 lb and is traveling forward at 2 ft/s when it strikes the 12-in.-diameter fender post AB used to protect a bridge pier. If the post is made from treated white spruce and is assumed fixed at the river bed, determine the maximum horizontal distance the top of the post will move due to the impact. Assume the tugboat is rigid and neglect the effect of the water.

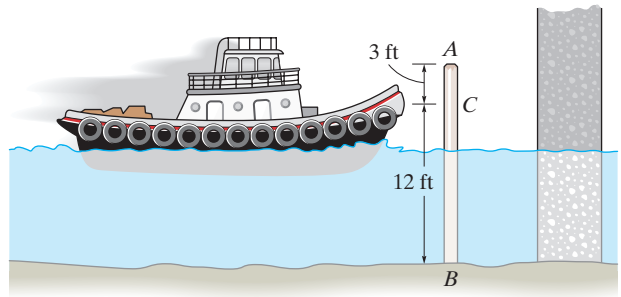

From Appendix C:

$$P_{\max} = \frac{3EI(\Delta_C)_{\max}}{(L_{BC})^3}$$

Conservation of Energy:

$$\frac{1}{2}mv^2 = \frac{1}{2}P_{\max}(\Delta_C)_{\max}$$

$$\frac{1}{2}mv^2 = \frac{1}{2}\left(\frac{3EI(\Delta_C)^2_{\max}}{(L_{BC})^3}\right)$$

$$(\Delta_C)_{\max} = \sqrt{\frac{mv^2L_{BC}^3}{3EI}}$$

$$(\Delta_C)_{\max} = \sqrt{\frac{(120\,000/32.2)(2)^2(12)^3}{(3)(1.40)(10^6)(144)(\frac{\pi}{4})(0.5)^4}} = 0.9315 \text{ ft} = 11.178 \text{ in.}$$

$$P_{\max} = \frac{3[1.40(10^6)](\frac{\pi}{4})(6)^4(11.178)}{(144)^3} = 16.00 \text{ kip}$$

$$\theta_C = \frac{P_{\max}L_{BC}^2}{2EI} = \frac{16.00(10^3)(144)^2}{2(1.40)(10^6)(\frac{\pi}{4})(6)^4} = 0.11644 \text{ rad}$$

$$(\Delta_A)_{\max} = (\Delta_C)_{\max} + \theta_C(L_{CA})$$

$$(\Delta_A)_{\max} = 11.178 + 0.11644(36) = 15.4 \text{ in.}$$ **Ans.**

Ans:
$(\Delta_A)_{\max} = 15.4$ in.

14–59. The wide-flange beam has a length of $2L$, a depth $2c$, and a constant EI. Determine the maximum height h at which a weight W can be dropped on its end without exceeding a maximum elastic stress σ_{max} in the beam.

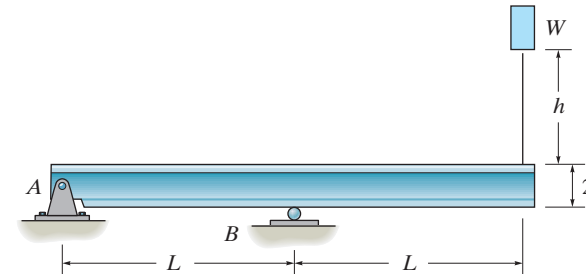

$$\frac{1}{2}P\Delta_C = 2\left(\frac{1}{2EI}\right)\int_0^L (-Px)^2\,dx$$

$$\Delta_C = \frac{2PL^3}{3EI}$$

$$\Delta_{st} = \frac{2WL^3}{3EI}$$

$$n = 1 + \sqrt{1 + 2\left(\frac{h}{\Delta_{st}}\right)}$$

$$\sigma_{max} = n(\sigma_{st})_{max} \qquad (\sigma_{st})_{max} = \frac{WLc}{I}$$

$$\sigma_{max} = \left[1 + \sqrt{1 + 2\left(\frac{h}{\Delta_{st}}\right)}\right]\frac{WLc}{I}$$

$$\left(\frac{\sigma_{max}I}{WLc} - 1\right)^2 = 1 + \frac{2h}{\Delta_{st}}$$

$$h = \frac{\Delta_{st}}{2}\left[\left(\frac{\sigma_{max}I}{WLc} - 1\right)^2 - 1\right]$$

$$= \frac{WL^3}{3EI}\left[\left(\frac{\sigma_{max}I}{WLc}\right)^2 - \frac{2\sigma_{max}I}{WLc}\right] = \frac{\sigma_{max}L^2}{3Ec}\left[\frac{\sigma_{max}I}{WLc} - 2\right] \qquad \textbf{Ans.}$$

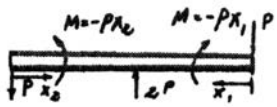

Ans:
$$h = \frac{\sigma_{max}L^2}{3Ec}\left[\frac{\sigma_{max}I}{WLc} - 2\right]$$

***14–60.** The weight of 175 lb is dropped from a height of 4 ft from the top of the A992 steel beam. Determine the maximum deflection and maximum stress in the beam if the supporting springs at A and B each have a stiffness of $k = 500$ lb/in. The beam is 3 in. thick and 4 in. wide.

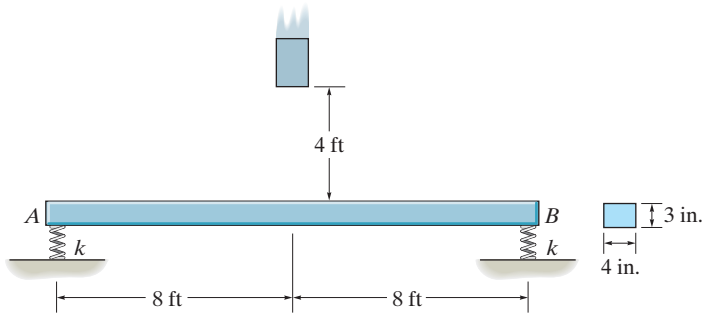

From Appendix C:

$$\Delta_{\text{beam}} = \frac{PL^3}{48EI}$$

$$k_{\text{beam}} = \frac{48EI}{L^3} = \frac{48(29)(10^3)\left(\frac{1}{12}\right)(4)(3^3)}{(16(12))^3} = 1.7700 \text{ kip/in.}$$

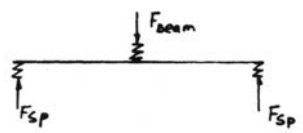

From Equilibrium (equivalent system):

$$2F_{\text{sp}} = F_{\text{beam}}$$

$$2k_{\text{sp}}\Delta_{\text{sp}} = k_{\text{beam}}\Delta_{\text{beam}}$$

$$\Delta_{\text{sp}} = \frac{1.7700(10^3)}{2(500)}\Delta_{\text{beam}}$$

$$\Delta_{\text{sp}} = 1.7700\Delta_{\text{beam}} \qquad (1)$$

Conservation of Energy:

$$U_e = U_i$$

$$W(h + \Delta_{\text{sp}} + \Delta_{\text{beam}}) = \frac{1}{2}k_{\text{beam}}\Delta_{\text{beam}}^2 + 2\left(\frac{1}{2}\right)k_{\text{sp}}\Delta_{\text{sp}}^2$$

From Eq. (1):

$$175[(4)(12) + 1.770\Delta_{\text{beam}} + \Delta_{\text{beam}}] = \frac{1}{2}(1.7700)(10^3)\Delta_{\text{beam}}^2 + 500(1.7700\Delta_{\text{beam}})^2$$

$$2451.5\Delta_{\text{beam}}^2 - 484.75\Delta_{\text{beam}} - 8400 = 0$$

$$\Delta_{\text{beam}} = 1.9526 \text{ in.}$$

From Eq. (1):

$$\Delta_{\text{sp}} = 3.4561 \text{ in.}$$

$$\Delta_{\max} = \Delta_{\text{sp}} + \Delta_{\text{beam}}$$

$$= 3.4561 + 1.9526 = 5.41 \text{ in.} \qquad \textbf{Ans.}$$

$$F_{\text{beam}} = k_{\text{beam}}\Delta_{\text{beam}}$$

$$= 1.7700(1.9526) = 3.4561 \text{ kip}$$

$$M_{\max} = \frac{F_{\text{beam}}L}{4} = \frac{3.4561(16)(12)}{4} = 165.893 \text{ kip}\cdot\text{in.}$$

$$\sigma_{\max} = \frac{M_{\max}c}{I} = \frac{165.893(1.5)}{\frac{1}{12}(4)(3^3)} = 27.6 \text{ ksi} < \sigma_Y \quad \text{OK} \qquad \textbf{Ans.}$$

14–61. The weight of 175 lb, is dropped from a height of 4 ft from the top of the A992 steel beam. Determine the load factor n if the supporting springs at A and B each have a stiffness of $k = 500$ lb/in. The beam is 3 in. thick and 4 in. wide.

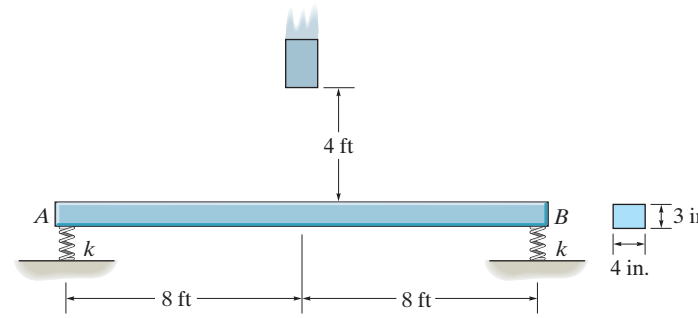

From Appendix C:

$$\Delta_{\text{beam}} = \frac{PL^3}{48EI}$$

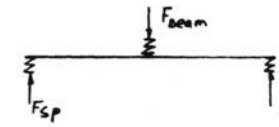

$$k_{\text{beam}} = \frac{48EI}{L^3} = \frac{48(29)(10^3)\left(\frac{1}{12}\right)(4)(3^3)}{(16(12))^3} = 1.7700 \text{ kip/in.}$$

From Equilibrium (equivalent system):

$$2F_{\text{sp}} = F_{\text{beam}}$$

$$2F_{\text{sp}}\Delta_{\text{sp}} = k_{\text{beam}}\Delta_{\text{beam}}$$

$$\Delta_{\text{sp}} = \frac{1.7700(10^3)}{2(500)}\Delta_{\text{beam}}$$

$$\Delta_{\text{sp}} = 1.7700\,\Delta_{\text{beam}} \qquad (1)$$

Conservation of Energy:

$$U_e = U_i$$

$$W(h + \Delta_{\text{sp}} + \Delta_{\text{beam}}) = \frac{1}{2}k_{\text{beam}}\Delta_{\text{beam}}^2 + 2\left(\frac{1}{2}\right)k_{\text{sp}}\Delta_{\text{sp}}^2$$

From Eq. (1):

$$175[(4)(12) + 1.770\Delta_{\text{beam}} + \Delta_{\text{beam}}] = \frac{1}{2}(1.7700)(10^3)\Delta_{\text{beam}}^2 + 500(1.7700\Delta_{\text{beam}})^2$$

$$2451.5\Delta_{\text{beam}}^2 - 484.75\Delta_{\text{beam}} - 8400 = 0$$

$$\Delta_{\text{beam}} = 1.9526 \text{ in.}$$

$$F_{\text{beam}} = k_{\text{beam}}\Delta_{\text{beam}}$$

$$= 1.7700(1.9526) = 3.4561 \text{ kip}$$

$$n = \frac{3.4561(10^3)}{175} = 19.7 \qquad \textbf{Ans.}$$

$$\sigma_{\max} = n(\sigma_{\text{st}})_{\max} = n\left(\frac{Mc}{I}\right)$$

$$M = \frac{175(16)(12)}{4} = 8.40 \text{ kip}\cdot\text{in.}$$

$$\sigma_{\max} = 19.7\left(\frac{8.40(1.5)}{\frac{1}{12}(4)(3^3)}\right) = 27.6 \text{ ksi} < \sigma_Y \qquad \text{OK}$$

Ans:
$n = 16.7$

14–62. The 200-lb block has a downward velocity of 4 ft/s when it is 3 ft from the top of the wooden beam. Determine the maximum stress in the beam due to the impact and compute the maximum deflection of its end C. $E_w = 1.9(10^3)$ ksi, $\sigma_Y = 8$ ksi.

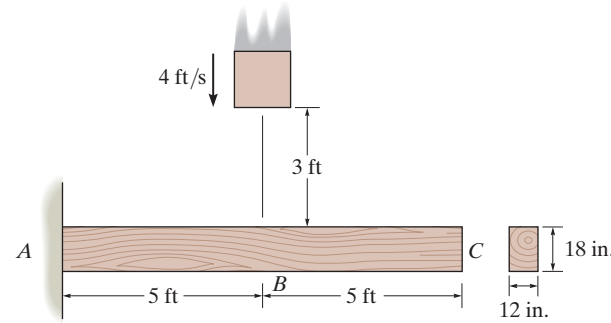

From Appendix C:

$$\Delta_{st} = \frac{PL^3}{3EI}$$

$$k = \frac{3EI}{L^3} = \frac{3(1.9)(10^3)\left(\frac{1}{12}\right)(12)(18^3)}{(5(12))^3} = 153.9 \text{ kip/in.}$$

Conservation of Energy:

$$U_e = U_i$$

$$\frac{1}{2}mv^2 + W(h + \Delta_{max}) = \frac{1}{12}k\Delta_{max}^2$$

$$\frac{1}{2}\left(\frac{200}{32.2(12)}\right)(4(12))^2 + 200(3(12)) + \Delta_{max}) = \frac{1}{2}(153.9)(10^3)\Delta_{max}^2$$

$$7796.27 + 200\Delta_{max} = 76950\Delta_{max}^2$$

$$\Delta_{max} = 0.31960 \text{ in.}$$

$$W' = k\Delta_{max} = 153.9(0.31960) = 49.187 \text{ kip}$$

$$M' = 49.187(5)(12) = 2951.22 \text{ kip} \cdot \text{in.}$$

$$\sigma_{max} = \frac{M'c}{I} = \frac{2951.22(9)}{\frac{1}{12}(12)(18^3)} = 4.55 \text{ ksi} < \sigma_Y \quad \text{OK}$$ **Ans.**

From Appendix C:

$$\theta_B = \frac{W'L^2}{2EI} = \frac{49.187(5(12))^2}{2(1.9)(10^3)\left(\frac{1}{12}\right)(12)(18^3)} = 7.990(10^{-3}) \text{ rad}$$

$$\Delta_B = \Delta_{max} = 0.31960 \text{ in.}$$

$$\Delta_C = \Delta_B + \theta_B(5)(12)$$

$$= 0.31960 + 7.990(10^{-3})(60) = 0.799 \text{ in.}$$ **Ans.**

Ans:
$\sigma_{max} = 4.55$ ksi, $\Delta_C = 0.799$ in.

14–63. The 100-lb block has a downward velocity of 4 ft/s when it is 3 ft from the top of the wooden beam. Determine the maximum stress in the beam due to the impact and compute the maximum deflection of point B. $E_w = 1.9(10^3)$ ksi, $\sigma_Y = 8$ ksi.

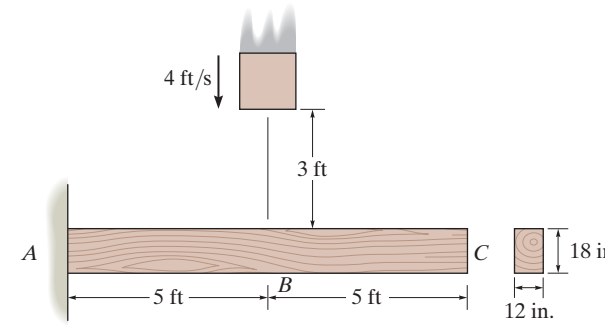

From Appendix C:

$$\Delta_{st} = \frac{PL^3}{3EI}$$

$$k = \frac{3EI}{L^3} = \frac{3(1.9)(10^3)\left(\frac{1}{12}\right)(12)(18^3)}{(5(12))^3} = 153.9 \text{ kip/in.}$$

Conservation of Energy:

$$U_e = U_i$$

$$\frac{1}{2}mv^2 + W(h + \Delta_{max}) = \frac{1}{12}k\Delta_{max}^2$$

$$\frac{1}{2}\left(\frac{100}{32.2(12)}\right)(4(12))^2 + 100(3(12)) + \Delta_{max}) = \frac{1}{2}(153.9)(10^3)\Delta_{max}^2$$

$$3898.14 + 100\Delta_{max} = 76950\Delta_{max}^2$$

$$\Delta_{max} = 0.2257 \text{ in.} = 0.226 \text{ in.}$$ **Ans.**

$$W' = k\Delta_{max} = 153.9(0.2257) = 34.739 \text{ kip}$$

$$M' = 34.739(5)(12) = 2084.33 \text{ kip}\cdot\text{in.}$$

$$\sigma_{max} = \frac{M'c}{I} = \frac{2084.33(9)}{\frac{1}{12}(12)(18^3)} = 3.22 \text{ ksi} < \sigma_Y \quad \text{OK}$$ **Ans.**

Ans:
$\Delta_B = 0.226$ in., $\sigma_{max} = 3.22$ ksi

***14–64.** The 50 kg block is dropped from $h = 0.9$ m onto the cantilever beam. If the beam is made from A992 steel and is a W200 × 46 wide-flange section, determine the maximum bending stress developed in the beam.

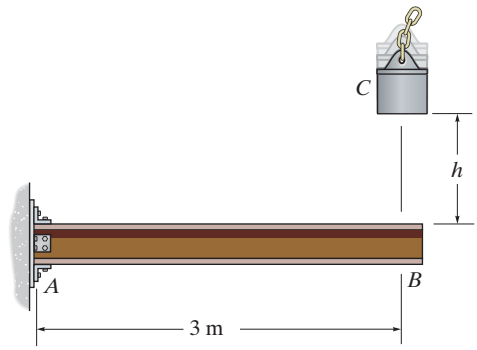

Impact Factor. From the table listed in the appendix, the necessary section properties for a W200 × 46 are

$$d = 203 \text{ mm} = 0.203 \text{ m} \qquad I = 45.5(10^6) \text{ mm}^4 = 45.5(10^{-6}) \text{ m}^4$$

From the table listed in the appendix, the static displacement of end B is $\Delta = \dfrac{PL^3}{3EI}$. Since $P = 50(9.81) = 490.5$ N and $L = 3$ m, then

$$\Delta_{st} = \frac{490.5(3^3)}{3[200(10^9)][45.5(10^{-6})]} = 0.4851(10^{-3}) \text{ m}$$

We obtain,

$$n = 1 + \sqrt{1 + 2\left(\frac{h}{\Delta_{st}}\right)} = 1 + \sqrt{1 + 2\left[\frac{0.9}{0.4851(10^{-3})}\right]} = 61.922$$

Maximum Bending Stress. The maximum force on the beam is $P_{max} = nmg = 61.922(50)(9.81) = 30.37(10^3)$ N. The maximum moment occurs at the fixed support A, where $M_{max} = P_{max}L = 30.37(10^3)(3) = 91.12(10^3)$ N · m. Applying the flexure formula,

$$\sigma_{max} = \frac{M_{max}c}{I} = \frac{91.12(10^3)(0.203/2)}{45.5(10^{-6})} = 203.26 \text{ MPa} = 203 \text{ MPa} \qquad \textbf{Ans.}$$

Since $\sigma_{max} < \sigma_Y = 345$ MPa, this result is valid.

14–65. Determine the maximum height h from which the 50-kg block can be dropped without causing yielding in the cantilever beam. The beam is made from A992 steel and is a W200 × 46 wide-flange section.

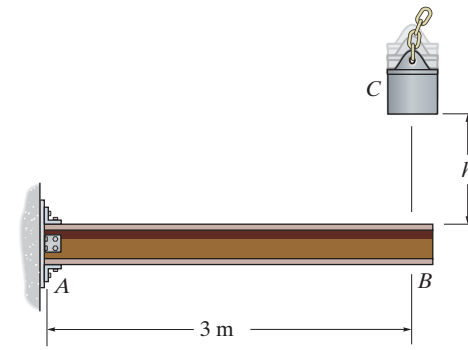

Maximum Bending Stress. From the table listed in the appendix, the necessary section properties for a W200 × 46 are

$$d = 203 \text{ mm} = 0.203 \text{ m} \qquad I = 45.5(10^6) \text{ mm}^4 = 45.5(10^{-6}) \text{ m}^4$$

The maximum force on the beam is $P_{max} = nmg = n(50)(9.81) = 490.5n$. The maximum moment occurs at the fixed support A, where $M_{max} = P_{max}L = 490.5n(3) = 1471.5n$. Applying the flexure formula,

$$\sigma_{max} = \frac{M_{max}c}{I}$$

$$345(10^6) = \frac{1471.5n(0.203/2)}{45.5(10^{-6})}$$

$$n = 105.1$$

Impact Factor. From the table listed in the appendix, the static displacement of end B is $\Delta_{st} = \dfrac{PL^3}{3EI}$. Since $P = 50(9.81) = 490.5$ N and $L = 3$ m, then

$$\Delta_{st} = \frac{490.5(3^3)}{3[200(10^9)][45.5(10^{-6})]} = 0.4851(10^{-3}) \text{ m}$$

We have,

$$n = 1 + \sqrt{1 + 2\left(\frac{h}{\Delta_{st}}\right)}$$

$$105.1 = 1 + \sqrt{1 + 2\left[\frac{h}{0.4851(10^{-3})}\right]}$$

$$h = 2.6283 \text{ m} = 2.63 \text{ m}$$ **Ans.**

Ans:
$h = 1.37$ m

14–66. The overhang beam is made of 2014-T6 aluminum. If the 75-kg block has a speed of $v = 3$ m/s at $h = 0.75$ m, determine the maximum bending stress developed in the beam.

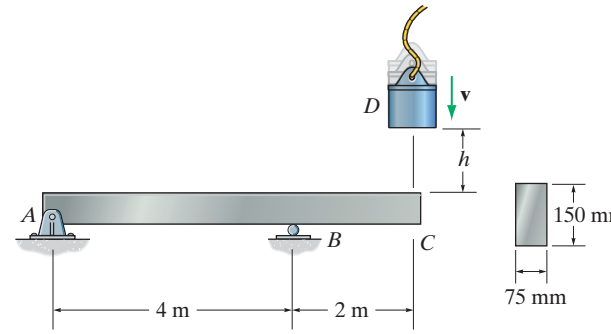

Equilibrium. The support reactions and the moment function for regions AB and BC of the beam under static conditions are indicated on the free-body diagram of the beam, Fig. a,

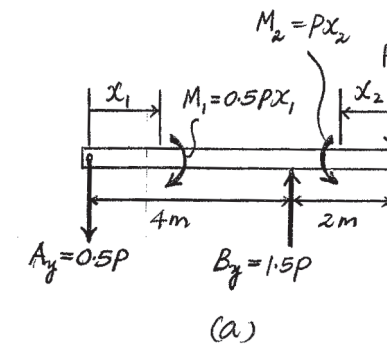

$$U_e = U_i$$

$$\frac{1}{2}P\Delta_{st} = \Sigma\int_0^L \frac{M^2dx}{2EI}$$

$$\frac{1}{2}P\Delta_{st} = \frac{1}{2EI}\left[\int_0^{4\text{ m}}(0.5Px_1)^2dx_1 + \int_0^{2\text{ m}}(Px_2)^2dx_2\right]$$

$$\frac{1}{2}P\Delta_{st} = \frac{1}{2EI}\left[\left(\frac{0.25}{3}P^2x_1^3\right)\Big|_0^{4\text{ m}} + \frac{P^2}{3}x_2^3\Big|_0^{2\text{ m}}\right]$$

$$\Delta_{st} = \frac{8P}{EI}$$

$I = \frac{1}{12}(0.075)(0.15^3) = 21.09375(10^{-6})\text{ m}^4$ and $E = E_{al} = 73.1$ GPa. Then, the equivalent spring constant can be determined from

$$P = k\Delta_{st}$$

$$P = k\left(\frac{8P}{EI}\right)$$

$$k = \frac{EI}{8} = \frac{73.1(10^9)[21.09375(10^{-6})]}{8}$$

$$= 192.74(10^3)\text{ N/m}$$

Conservation of Energy.

$$U_e = U_i$$

$$\frac{1}{2}mv^2 + mg(h + \Delta_{max}) = \frac{1}{2}k\Delta_{max}^2$$

$$\frac{1}{2}(75)(3^2) + 75(9.81)(0.75 + \Delta_{max}) = \frac{1}{2}\left[192.74(10^3)\right]\Delta_{max}^2$$

$$96372.07\Delta_{max}^2 - 735.75\Delta_{max} - 889.3125 = 0$$

$$\Delta_{max} = 0.09996\text{ m}$$

Maximum Bending Stress. The maximum force on the beam is $P_{max} = k\Delta_{max} = 192.74(10^3)[0.09996] = 19.266(10^3)$ N. The maximum moment occurs at support B. Thus, $M_{max} = P_{max}(2) = 19.266(10^3)(2) = 38.531(10^3)$ N·m.

Applying the flexure formula,

$$\sigma_{max} = \frac{M_{max}c}{I} = \frac{38.531(10^3)(0.15/2)}{21.09375(10^{-6})} = 137\text{ MPa} \qquad \textbf{Ans.}$$

Since $\sigma_{max} < \sigma_Y = 414$ MPa, this result is valid.

Ans:
$\sigma_{max} = 137$ MPa

14–67. The overhang beam is made of 2014-T6 aluminum. Determine the maximum height h from which the 100-kg block can be dropped from rest ($v = 0$), without causing the beam to yield.

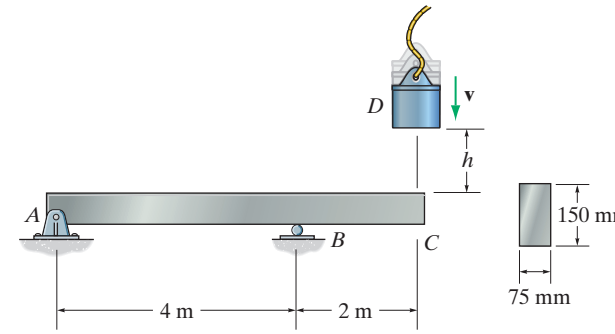

Equilibrium. The support reactions and the moment function for regions AB and BC of the beam under static conditions are indicated on the free-body diagram of the beam, Fig. a,

$$U_e = U_i$$

$$\frac{1}{2}P\Delta_{st} = \Sigma\int_0^L \frac{M^2dx}{2EI}$$

$$\frac{1}{2}P\Delta_{st} = \frac{1}{2EI}\left[\int_0^{4\text{ m}}(0.5Px_1)^2dx_1 + \int_0^{2\text{ m}}(Px_2)^2dx_2\right]$$

$$\frac{1}{2}P\Delta_{st} = \frac{1}{2EI}\left[\left(\frac{0.25}{3}P^2x_1^3\right)\Bigg|_0^{4\text{ m}} + \frac{P^2}{3}x_2^3\Bigg|_0^{2\text{ m}}\right]$$

$$\Delta_{st} = \frac{8P}{EI}$$

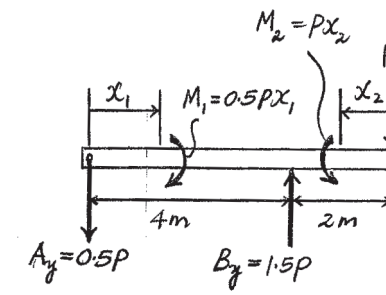

(a)

$I = \frac{1}{12}(0.075)(0.15^3) = 21.09375(10^{-6})\text{ m}^4$, $P = 100(9.81) = 981\text{N}$, and $E = E_{al} = 73.1$ GPa. Then,

$$\Delta_{st} = \frac{8(981)}{73.1(10^9)[21.09375(10^{-6})]} = 5.0896(10^{-3})\text{ m}$$

Maximum Bending Stress. The maximum force on the beam is $P_{max} = nP = 981n$. The maximum moment occurs at support B. Thus, $M_{max} = P_{max}(2) = (981n)(2) = 1962n$. Applying the flexure formula,

$$\sigma_{max} = \frac{M_{max}c}{I}$$

$$414(10^6) = \frac{1962n(0.15/2)}{21.09375(10^{-6})}$$

$$n = 59.35$$

Impact Factor.

$$n = 1 + \sqrt{1 + 2\left(\frac{h}{\Delta_{st}}\right)}$$

$$59.35 = 1 + \sqrt{1 + 2\left[\frac{h}{5.0896(10^{-3})}\right]}$$

$$h = 8.66\text{ m}$$

Ans:
$h = 8.66$ m

***14–68.** A 40-lb weight is dropped from a height of $h = 2$ ft onto the center of the cantilevered A992 steel beam. If the beam is a W10 × 15, determine the maximum bending stress developed in the beam.

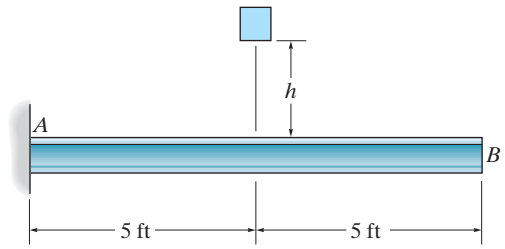

For W 10 × 15: $I = 68.9 \text{ in}^4$ $d = 9.99$ in.

From Appendix C:

$$\Delta_{st} = \frac{PL^3}{3EI} = \frac{40[5(12)]^3}{3(29)(10^6)(68.9)} = 1.44137(10^{-3}) \text{ in.}$$

$$n = \left[1 + \sqrt{1 + 2\left(\frac{h}{\Delta_{st}}\right)}\right] = \left[1 + \sqrt{1 + 2\left(\frac{2(12)}{1.44137(10^{-3})}\right)}\right] = 183.49$$

$$\sigma_{st} = \frac{Mc}{I}; \text{ Here } M = 40(5)(12) = 2400 \text{ lb} \cdot \text{in.}$$

$$\sigma_{st} = \frac{2400(4.995)}{68.9}, \quad c = \frac{9.99}{2} = 4.995 \text{ in.}$$

$$= 174.0 \text{ psi}$$

$$\sigma_{max} = n\,\sigma_{st} = 183.49(174.0)$$

$$= 31926 \text{ psi} = 31.9 \text{ ksi} < \sigma_Y = 50 \text{ ksi} \quad \text{OK}$$ **Ans.**

14–69. If the maximum allowable bending stress for the W10 × 15 structural A992 steel beam is $\sigma_{allow} = 20$ ksi, determine the maximum height h from which a 50-lb weight can be released from rest and strike the center of the beam.

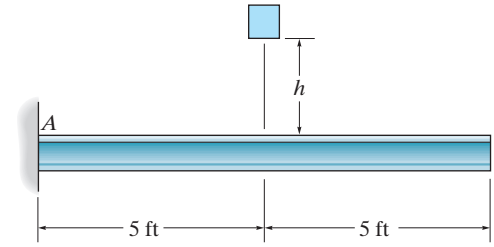

From Appendix C:

$$\Delta_{st} = \frac{PL^3}{3EI} = \frac{50[5(12)]^3}{3(29)(10^6)(68.9)} = 1.80171\ (10^{-3})\ \text{in.}$$

$$\sigma_{st} = \frac{Mc}{I}; \quad \text{Here } M = 50(5)(12) = 3000\ \text{lb}\cdot\text{in.}$$

For W 10 × 15: $I = 68.9\ \text{in}^4$ $d = 9.99$ in.

$$\sigma_{st} = \frac{3000\ (4.995)}{68.9}, \quad c = \frac{9.99}{2} = 4.995\ \text{in.}$$

$$= 217.49\ \text{psi}$$

$$\sigma_{max} = n\,\sigma_{st}$$

$$20(10^3) = n(217.49); \quad n = 91.96$$

$$n = \left[1 + \sqrt{1 + 2\left(\frac{h}{\Delta_{st}}\right)}\right]$$

$$91.96 = \left[1 + \sqrt{1 + 2\left(\frac{h}{1.80171(10^{-3})}\right)}\right]$$

$$91.96 = [1 + \sqrt{1 + 1110.06\,h}]$$

$h = 7.45$ in. **Ans.**

Ans:
$h = 7.45$ in.

14–70. A 40-lb weight is dropped from a height of $h = 2$ ft onto the center of the cantilevered A992 steel beam. If the beam is a W10 × 15, determine the vertical displacement of its end B due to the impact.

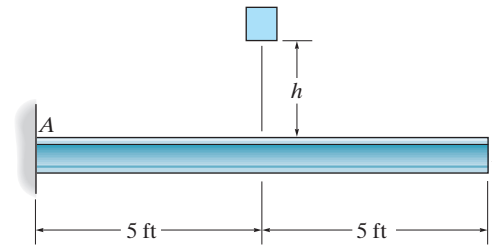

From Appendix C:

$$\Delta_{st} = \frac{PL^3}{3EI} = \frac{40[5(12)]^3}{3(29)(10^6)(68.9)} = 1.44137(10^{-3}) \text{ in.}$$

$$n = \left[1 + \sqrt{1 + 2\left(\frac{h}{\Delta_{st}}\right)}\right] = \left[1 + \sqrt{1 + 2\left(\frac{24}{1.44137(10^{-3})}\right)}\right] = 183.49$$

From Appendix C:

$$\theta_{st} = \frac{PL^2}{2EI} = \frac{40\,[5(12)]^2}{2(29)(10^6)(68.9)} = 36.034\,(10^{-6}) \text{ rad}$$

$$\theta_{max} = n\,\theta_{st} = 183.49[36.034(10^{-6})] = 6.612(10^{-3}) \text{ rad}$$

$$\Delta_{max} = n\,\Delta_{st} = 183.49[1.44137(10^{-3})] = 0.26448 \text{ in.}$$

$$(\Delta_B)_{max} = \Delta_{max} + \theta_{max}\,L = 0.26448 + 6.612(10^{-3})(5)(12)$$

$$= 0.661 \text{ in.}$$ **Ans.**

Ans:
$(\Delta_B)_{max} = 0.661$ in.

14–71. The car bumper is made of polycarbonate-polybutylene terephthalate. If $E = 2.0$ GPa, determine the maximum deflection and maximum stress in the bumper if it strikes the rigid post when the car is coasting at $v = 0.75$ m/s. The car has a mass of 1.80 Mg, and the bumper can be considered simply supported on two spring supports connected to the rigid frame of the car. For the bumper take $I = 300(10^6)$ mm^4, $c = 75$ mm, $\sigma_Y = 30$ MPa and $k = 1.5$ MN/m.

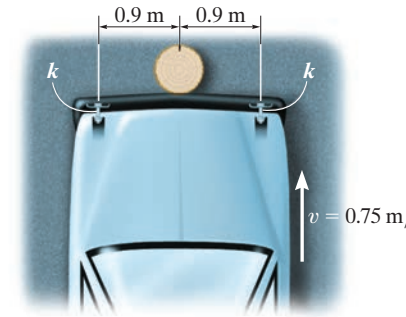

Equilibrium: This requires $F_{sp} = \dfrac{P_{beam}}{2}$. Then

$$k_{sp}\,\Delta_{sp} = \frac{k\Delta_{beam}}{2} \qquad \text{or} \qquad \Delta_{sp} = \frac{k}{2k_{sp}}\,\Delta_{beam} \qquad [1]$$

Conservation of Energy: The equivalent spring constant for the beam can be determined using the deflection table listed in the Appendix C.

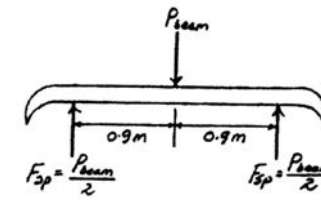

$$k = \frac{48EI}{L^3} = \frac{48\left[2(10^9)\right]\left[300(10^{-6})\right]}{1.8^3} = 4\,938\,271.6 \text{ N/m}$$

Thus,

$$U_e = U_i$$

$$\frac{1}{2}mv^2 = \frac{1}{2}k\Delta_{beam}^2 + 2\left(\frac{1}{2}k_{sp}\,\Delta_{sp}^2\right) \qquad [2]$$

Substitute Eq. [1] into [2] yields

$$\frac{1}{2}mv^2 = \frac{1}{2}k\Delta_{beam}^2 + \frac{k^2}{4k_{sp}}\,\Delta_{beam}^2$$

$$\frac{1}{2}(1800)\left(0.75^2\right) = \frac{1}{2}(493\,8271.6)\,\Delta_{beam}^2 + \frac{(4\,93\,8271.6)^2}{4[1.5(10^6)]}\,\Delta_{beam}^2$$

$$\Delta_{beam} = 8.8025\left(10^{-3}\right) \text{ m}$$

Maximum Displacement: From Eq. [1] $\Delta_{sp} = \dfrac{4\,938\,271.6}{2[1.5(10^6)]}\left[8.8025\left(10^{-3}\right)\right] = 0.014490$ m.

$$\begin{aligned}\Delta_{max} &= \Delta_{sp} + \Delta_{beam}\\ &= 0.014490 + 8.8025\left(10^{-3}\right)\\ &= 0.02329 \text{ m} = 23.3 \text{ mm}\end{aligned}$$ **Ans.**

Maximum Stress: The maximum force on the beam is $P_{beam} = k\Delta_{beam} = 4\,938\,271.6\left[8.8025\left(10^{-3}\right)\right] = 43\,469.3$ N. The maximum moment occurs at mid-span. $M_{max} = \dfrac{P_{beam}\,L}{4} = \dfrac{43\,469.3(1.8)}{4} = 19\,561.2 \text{ N}\cdot\text{m}$.

$$\sigma_{max} = \frac{M_{max}\,c}{I} = \frac{19\,561.2(0.075)}{300(10^{-6})} = 4.89 \text{ MPa}$$ **Ans.**

Since $\sigma_{max} < \sigma_\gamma = 30$ MPa, the above analysis is valid.

Ans:
$\Delta_{max} = 23.3$ mm, $\sigma_{max} = 4.89$ MPa

***14–72.** Determine the vertical displacement of joint A. Each A992 steel member has a cross-sectional area of 400 mm^2.

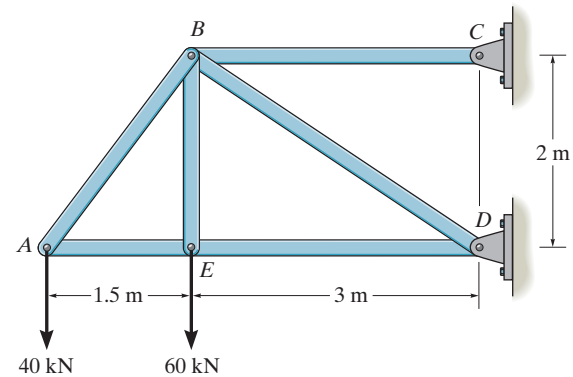

Member	n	N	L	nNL
AB	1.25	50	2.5	156.25
AE	−0.75	−30	1.5	33.75
BC	2.25	180	3.0	1215.00
BD	$-0.5\sqrt{13}$	$-50\sqrt{13}$	$\sqrt{13}$	1171.80
BE	0	60	2.0	0
DE	−0.75	−30	3.0	67.5

$\Sigma = 2644.30$

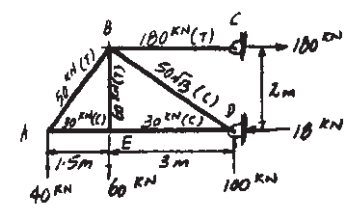

$$1 \cdot \Delta_{A_v} = \Sigma \frac{nNL}{AE}$$

$$\Delta_{A_v} = \frac{2644.30(10^3)}{400(10^{-6})(200)(10^9)} = 0.0331 \text{ m} = 33.1 \text{ mm}$$ **Ans.**

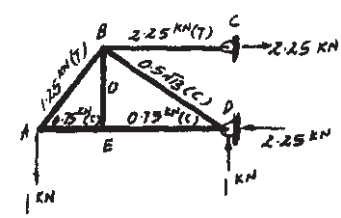

14–73. Determine the horizontal displacement of joint B. Each A992 steel member has a cross-sectional area of 2 in^2.

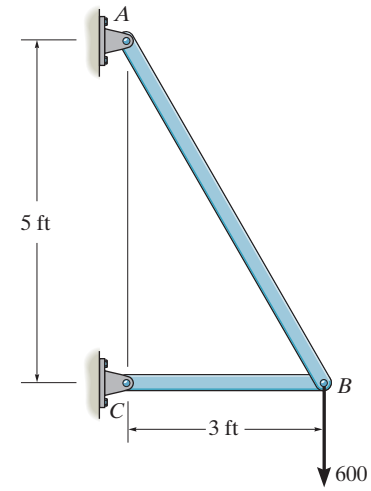

$$1 \cdot \Delta_{B_h} = \Sigma \frac{nNL}{AE}$$

$$\Delta_{B_h} = \frac{1(-360)(3)(12)}{2(29)(10^6)} = -0.223(10^{-3}) \text{ in.}$$

$$= 0.223(10^{-3}) \text{ in.} \leftarrow$$ **Ans.**

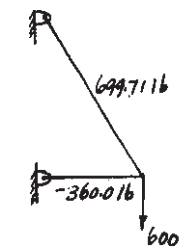

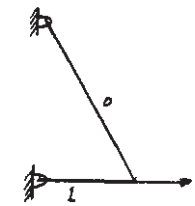

Ans:
$(\Delta_B)_h = 0.223(10^{-3})$ in. $\leftarrow$

14–74. Determine the vertical displacement of joint B. Each A992 steel member has a cross-sectional area of 2 in^2.

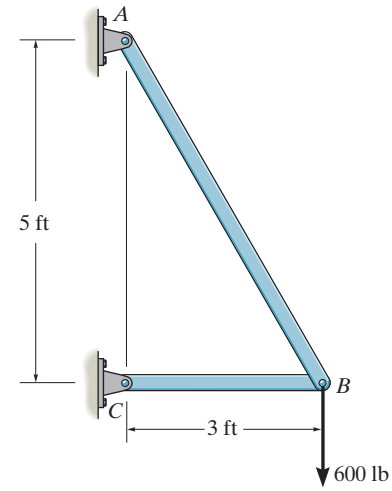

$$1 \cdot \Delta_{B_v} = \Sigma \frac{nNL}{AE}$$

$$\Delta_{B_v} = \frac{1.1662\,(699.71)(5.831)(12)}{AE} + \frac{-0.60\,(-360)(3)(12)}{AE}$$

$$= \frac{64872.807}{2(29)(10^6)} = 0.00112 \text{ in.} \downarrow$$ **Ans.**

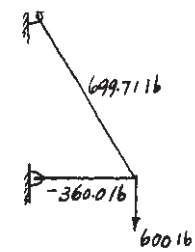

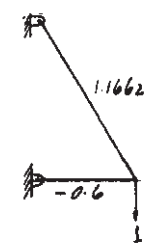

Ans:
$(\Delta_B)_v = 0.00112$ in.$\downarrow$

14–75. Determine the vertical displacement of joint B. For each A992 steel member $A = 1.5\ \text{in}^2$.

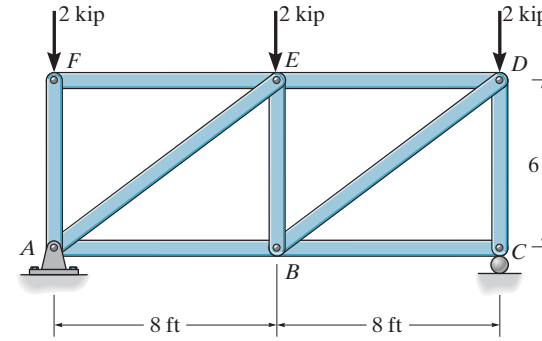

$$1 \cdot \Delta_{B_v} = \Sigma \frac{nNL}{AE}$$

$$\Delta_{B_v} = \frac{1}{AE}\{(-1.667)(-0.8333)(10) + (1.667)(0.8333)(10) + (0.6667)(1.333)(8) + (-0.6667)(-1.333)(8) + (-1)(0.5)(6) + (-3)(-0.5)(6)\}(12)$$

$$= \frac{576}{1.5(29)(10^3)} = 0.0132 \text{ in.}$$ **Ans.**

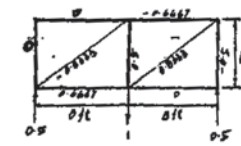

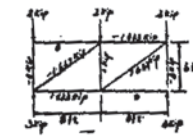

Ans:
$(\Delta_B)_v = 0.0132\ \text{in.}\downarrow$

***14–76.** Determine the vertical displacement of joint E. For each A992 steel member $A = 1.5\ \text{in}^2$.

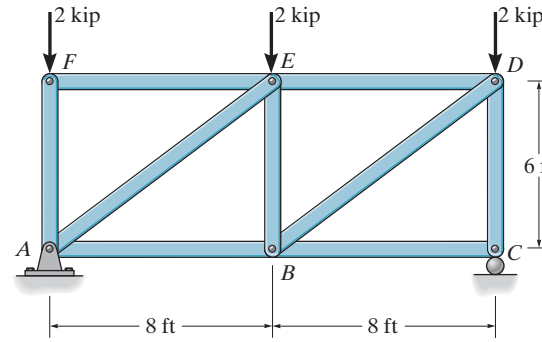

$$1 \cdot \Delta_{E_v} = \Sigma \frac{nNL}{AE}$$

$$\Delta_{E_v} = \frac{1}{AE}[(-1.667)(-0.833)(10) + (1.667)(0.8333)(10) + (0.667)(1.33)(8) + (-0.667)(-1.33)(8) + (-1)(-0.5)(6) + (-3)(-0.5)(6)](12)$$

$$= \frac{648}{1.5(29)(10^3)} = 0.0149\ \text{in.}$$ **Ans.**

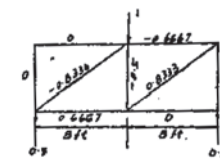

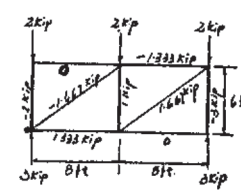

14–77. Determine the vertical displacement of point B. Each A992 steel member has a cross-sectional area of 4.5 in^2.

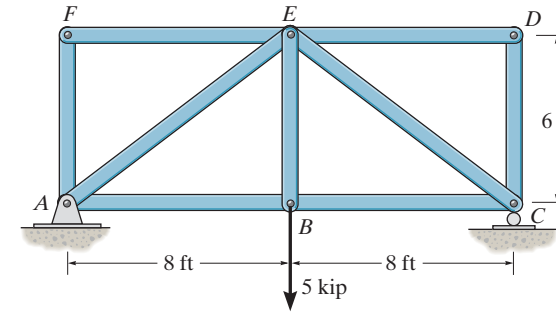

Virtual-Work Equation: Applying Eq. 14–39, we have

Member	*n*	*N*	*L*	*nNL*
AB	0.6667	3.333	96	213.33
BC	0.6667	3.333	96	213.33
CD	0	0	72	0
DE	0	0	96	0
EF	0	0	96	0
AF	0	0	72	0
AE	–0.8333	–4.167	120	416.67
CE	–0.8333	–4.167	120	416.67
BE	1.00	5.00	72	360.00
				$\Sigma 1620\ \text{kip}^2 \cdot \text{in.}$

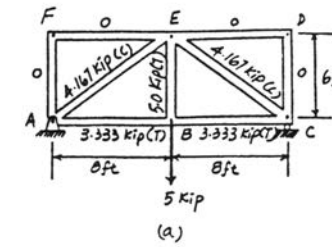

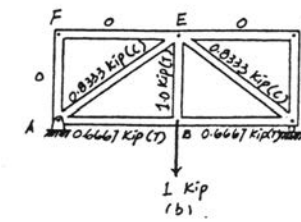

$$1 \cdot \Delta = \sum \frac{nNL}{AE}$$

$$1\ \text{kip} \cdot (\Delta_B)_v = \frac{1620\ \text{kip}^2 \cdot \text{in.}}{AE}$$

$$(\Delta_B)_v = \frac{1620}{4.5[29.0(10^3)]} = 0.0124\ \text{in.} \downarrow$$ **Ans.**

Ans:
$(\Delta_B)_v = 0.0124$ in.$\downarrow$

14–78. Determine the vertical displacement of point E. Each A992 steel member has a cross-sectional area of 4.5 in^2.

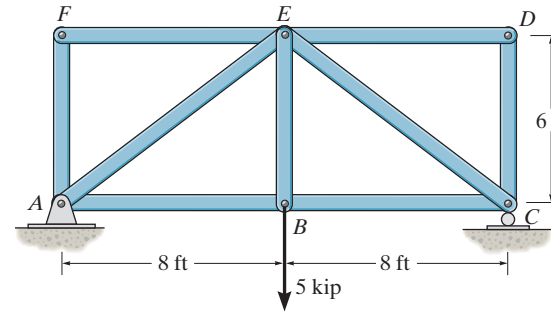

Virtual-Work Equation: Applying Eq. 14–39, we have

Member	*n*	*N*	*L*	*nNL*
AB	0.6667	3.333	96	213.33
BC	0.6667	3.333	96	213.33
CD	0	0	72	0
DE	0	0	96	0
EF	0	0	96	0
AF	0	0	72	0
AE	–0.8333	–4.167	120	416.67
CE	–0.8333	–4.167	120	416.67
BE	0	5.00	72	0
				$\Sigma 1260\ \text{kip}^2 \cdot \text{in.}$

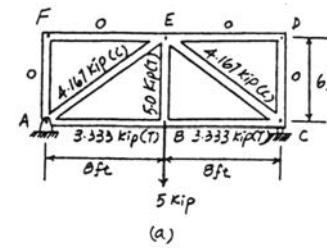

(a)

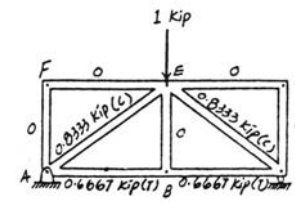

(c)

$$1 \cdot \Delta = \sum \frac{nNL}{AE}$$

$$1\ \text{kip} \cdot (\Delta_E)_v = \frac{1260\ \text{kip}^2 \cdot \text{in.}}{AE}$$

$$(\Delta_E)_v = \frac{1260}{4.5[29.0(10^3)]} = 0.00966\ \text{in.} \downarrow \qquad \textbf{Ans.}$$

Ans:
$(\Delta_E)_v = 0.00966\ \text{in.}\downarrow$

14–79. Determine the horizontal displacement of joint B of the truss. Each A992 steel member has a cross-sectional area of 400 mm^2.

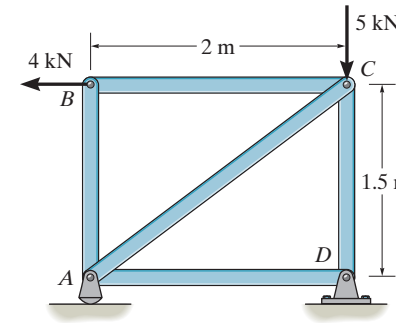

Member	n	N	L	nNL
AB	0	0	1.5	0
AC	–1.25	–5.00	2.5	15.625
AD	1.00	4.00	2.0	8.000
BC	1.00	4.00	2.0	8.000
CD	0.75	–2.00	1.5	–2.25
			$\Sigma =$	29.375

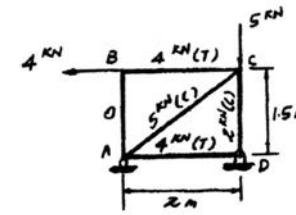

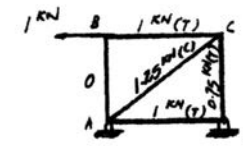

$$1 \cdot \Delta_{B_h} = \Sigma \frac{nNL}{AE}$$

$$\Delta_{B_h} = \frac{29.375(10^3)}{400(10^{-6})(200)(10^9)} = 0.3672(10^{-3})\text{ m} = 0.367\text{ mm}$$ **Ans.**

Ans:
$(\Delta_B)_h = 0.367$ mm

***14–80.** Determine the vertical displacement of joint C of the truss. Each A992 steel member has a cross-sectional area of 400 mm^2.

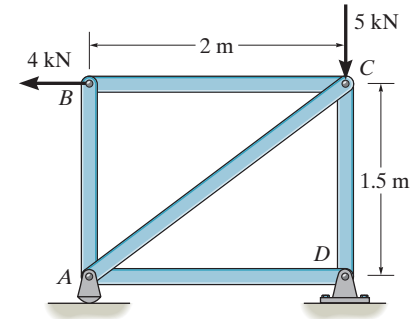

Member	n	N	L	nNL
AB	0	0	1.5	0
AC	0	–5.00	2.5	0
AD	0	4.00	2.0	0
BC	0	4.00	2.0	0
CD	–1.00	–2.00	1.5	3.00
			Σ =	3.00

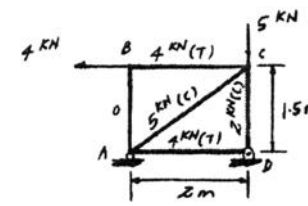

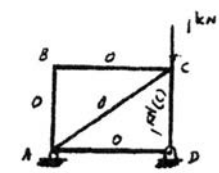

$$1 \cdot \Delta_{C_v} = \Sigma \frac{nNL}{AE}$$

$$\Delta_{C_v} = \frac{3.00\,(10^3)}{400(10^{-6})(200)(10^9)} = 37.5(10^{-6})\text{ m} = 0.0375\text{ mm}$$ **Ans.**

14–81. Determine the horizontal displacement of joint C on the truss. Each A992 steel member has a cross-sectional area of 3 in^2.

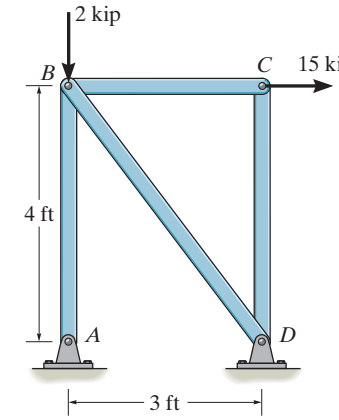

Member	n	N	L	nNL
AB	1.333	18.00	48	1152
BC	1.000	15.00	36	540
BD	−1.666	−25.00	60	2500
CD	0	0	48	0
				$\Sigma = 4192$

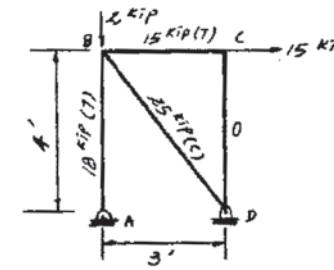

$$1 \cdot \Delta_{C_h} = \Sigma \frac{nNL}{AE}$$

$$\Delta_{C_h} = \frac{4192}{(3)(29)(10^3)} = 0.0482 \text{ in.}$$ **Ans.**

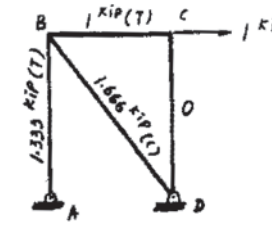

Ans:
$(\Delta_C)_h = 0.0482$ in.

14–82. Determine the horizontal displacement of joint B on the truss. Each A992 steel member has a cross-sectional area of 3 in^2.

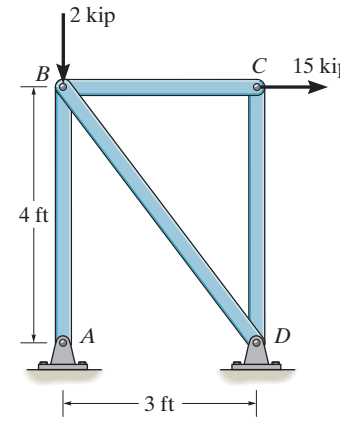

Member	n	N	L (in.)	nNL
AB	1.333	18.00	48	1152
BC	0	15.00	36	0
BD	−1.666	−25.00	60	2500
CD	0	0	48	0
			Σ =	3652

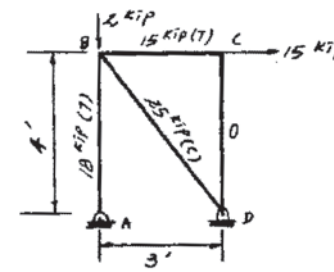

$$1 \cdot \Delta_{B_h} = \Sigma \frac{nNL}{AE}$$

$$\Delta_{B_h} = \frac{3652}{(3)(29)(10^3)} = 0.0420 \text{ in.}$$ **Ans.**

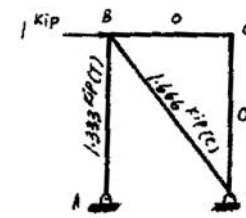

Ans:
$(\Delta_B)_h = 0.0420$ in.

14–83. Determine the vertical displacement of joint A. The truss is made from A992 steel rods having a diameter of 30 mm.

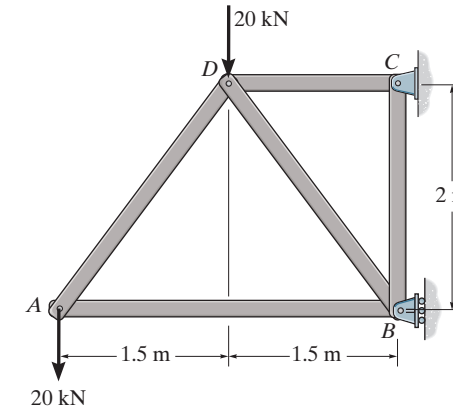

Members Real Force *N*. As indicated in Fig. *a*.

Members Virtual Force *n*. As indicated in Fig. *b*.

Virtual Work Equation. Since $\sigma_{\max} = \dfrac{F_{BD}}{A} = \dfrac{50(10^3)}{\frac{\pi}{4}(0.03^2)} = 70.74 \text{ MPa} < \sigma_Y = 345 \text{ MPa}$,

Member	n (N)	N (N)	L(m)	nNL(N$^2\cdot$m)
AB	-0.75	$-15(10^3)$	3	$33.75(10^3)$
AD	1.25	$25(10^3)$	2.5	$78.125(10^3)$
BC	1	$40(10^3)$	2	$80(10^3)$
BD	-1.25	$-50(10^3)$	2.5	$156.25(10^3)$
CD	1.5	$45(10^3)$	1.5	$101.25(10^3)$
				$\Sigma\ 449.375(10^3)$

Then

$$1\cdot\Delta = \Sigma\frac{nNL}{AE}$$

$$1\text{ N}\cdot(\Delta_A)_v = \frac{449.375(10^3)}{\frac{\pi}{4}(0.03^2)[200(10^9)]}$$

$$(\Delta_A)_v = 3.179(10^{-3})\text{ m} = 3.18\text{ mm}\downarrow$$ **Ans.**

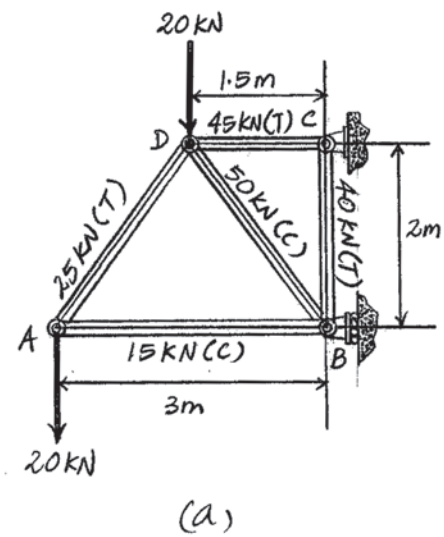

(a)

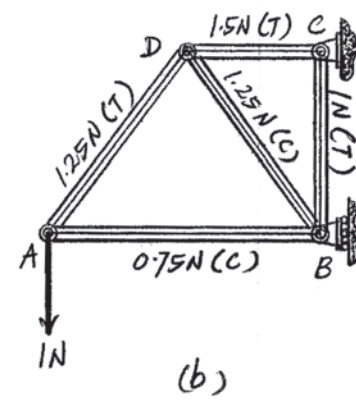

(b)

Ans:
$(\Delta_A)_v = 3.18$ mm

***14–84.** Determine the vertical displacement of joint D. The truss is made from A992 steel rods having a diameter of 30 mm.

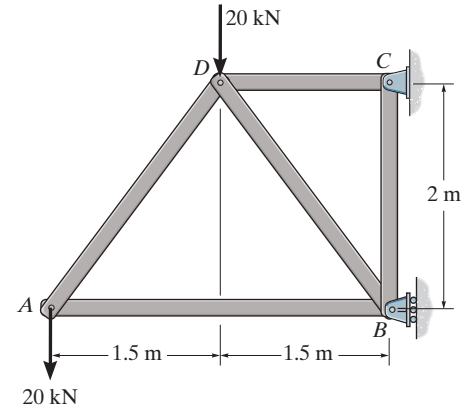

Members Real Force *N*. As indicated in Fig. *a*.

Members Virtual Force *n*. As indicated in Fig. *b*.

Virtual Work Equation. Since $\sigma_{\max} = \dfrac{F_{BD}}{A} = \dfrac{50(10^3)}{\frac{\pi}{4}(0.03^2)} = 70.74 \text{ MPa} < \sigma_Y = 345 \text{ MPa}$,

Member	n (N)	N (N)	L(m)	$nNL(\text{N}^2 \cdot \text{m})$
AB	0	$-15(10^3)$	3	0
AD	0	$25(10^3)$	2.5	0
BC	1	$40(10^3)$	2	$80(10^3)$
BD	-1.25	$-50(10^3)$	2.5	$156.25(10^3)$
CD	0.75	$45(10^3)$	1.5	$50.625(10^3)$
				$\Sigma\ 286.875(10^3)$

Then

$$1 \cdot \Delta = \Sigma \frac{nNL}{AE}$$

$$1\ \text{N} \cdot (\Delta_D)_v = \frac{286.875(10^3)}{\frac{\pi}{4}(0.03^2)[200(10^9)]}$$

$$(\Delta_D)_v = 2.029(10^{-3})\ \text{m} = 2.03\ \text{mm} \downarrow \qquad \textbf{Ans.}$$

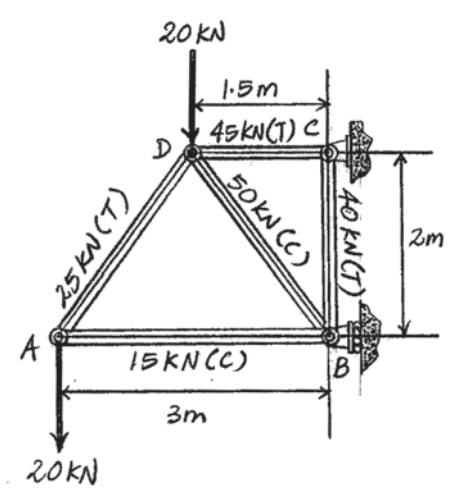

(a)

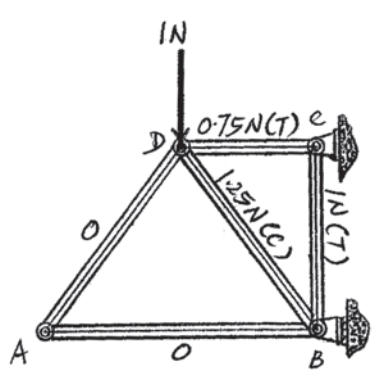

(b)

14–85. Determine the vertical displacement of joint C on the truss. Each A992 steel member has a cross-sectional area of $A = 300\ \text{mm}^2$.

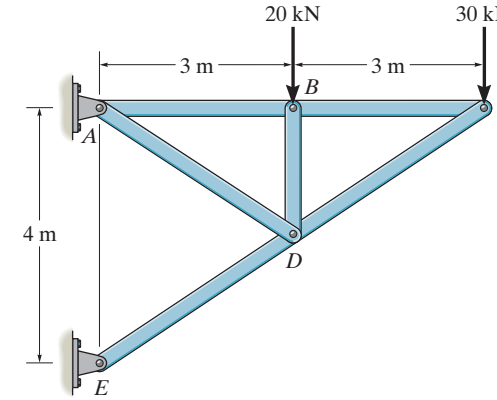

Member	n	N	L	nNL
AB	1.50	45.0	3	202.5
AD	0	18.03	$\sqrt{13}$	0
BC	1.50	45.0	3	202.5
BD	0	−20.0	2	0
CD	−1.803	−54.08	$\sqrt{13}$	351.56
DE	−1.803	−72.11	$\sqrt{13}$	468.77
				$\Sigma = 1225.33$

$$1 \cdot \Delta_{C_v} = \Sigma \frac{nNL}{AE}$$

$$\Delta_{C_v} = \frac{1225.33(10^3)}{300(10^{-6})(200)(10^9)} = 0.0204\ \text{m} = 20.4\ \text{mm}$$ **Ans.**

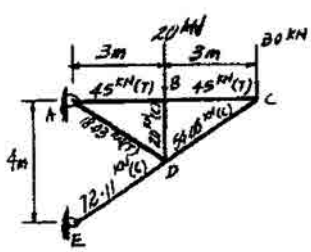

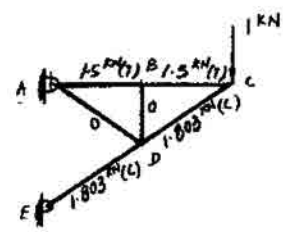

Ans:
$(\Delta_C)_v = 20.4\ \text{mm}$

14–86. Determine the vertical displacement of joint D on the truss. Each A992 steel member has a cross-sectional area of $A = 300\ \text{mm}^2$.

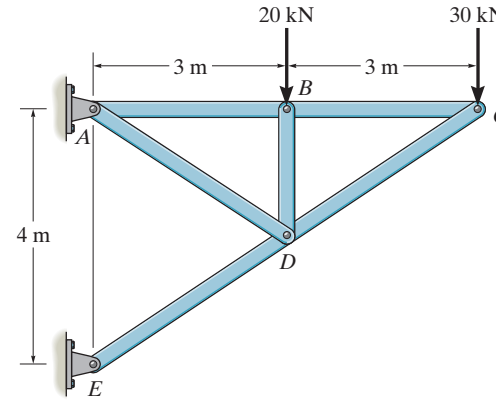

Member	n	N	L	nNL
AB	0	45.0	3	0
AD	0.9014	18.03	$\sqrt{13}$	58.60
BC	0	45.0	3	0
BD	0	−20.0	2	0
CD	0	−54.08	$\sqrt{13}$	0
DE	−0.9014	−72.11	$\sqrt{13}$	234.36
				$\Sigma = 292.96$

$$1 \cdot \Delta_{D_v} = \Sigma \frac{nNL}{AE}$$

$$\Delta_{D_v} = \frac{292.96(10^3)}{300(10^{-6})(200)(10^9)} = 4.88(10^{-3})\ \text{m} = 4.88\ \text{mm}$$ **Ans.**

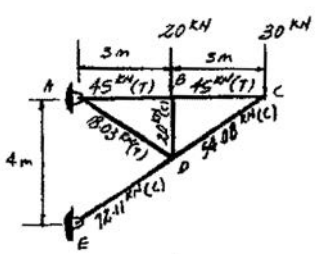

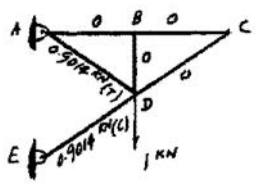

Ans:
$(\Delta_D)_v = 4.88\ \text{mm}$

14–87. Determine the displacement at point C. EI is constant.

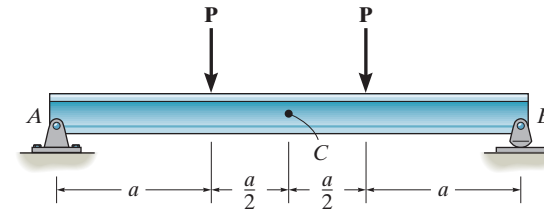

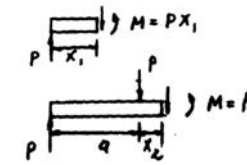

$$1 \cdot \Delta_C = \int_0^L \frac{mM}{EI}\,dx$$

$$\Delta_C = 2\left(\frac{1}{EI}\right)\left[\int_0^a \left(\frac{1}{2}x_1\right)(Px_1)dx_1 + \int_0^{a/2} \frac{1}{2}(a + x_2)(Pa)dx_2\right]$$

$$= \frac{23Pa^3}{24EI}$$ **Ans.**

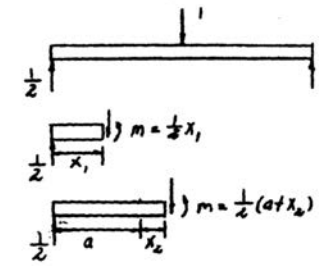

Ans:

$$\Delta_C = \frac{23Pa^3}{24EI}$$

***14–88.** The beam is made of southern pine for which $E_p = 13$ GPa. Determine the displacement at A.

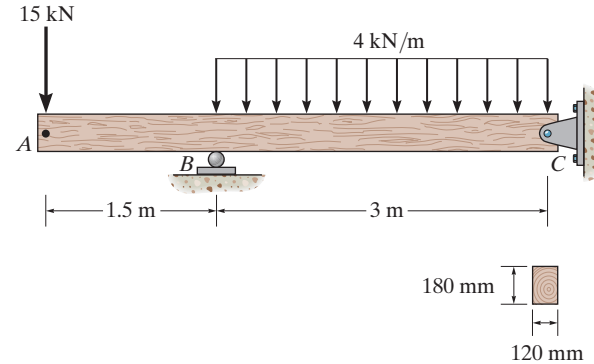

$$1 \cdot \Delta_A = \int_0^L \frac{mM}{EI}$$

$$\Delta_A = \frac{1}{EI}\left[\int_0^{1.5} (x_1)(15x_1)dx_1 + \int_0^{3} (0.5x_2)(2x_2^2 + 1.5x_2)dx_2\right]$$

$$= \frac{43.875 \text{ kN} \cdot \text{m}^3}{EI} = \frac{43.875(10^3)}{13(10^9)(\frac{1}{12})(0.12)(0.18)^3} = 0.0579 \text{ m} = 57.9 \text{ mm} \qquad \textbf{Ans.}$$

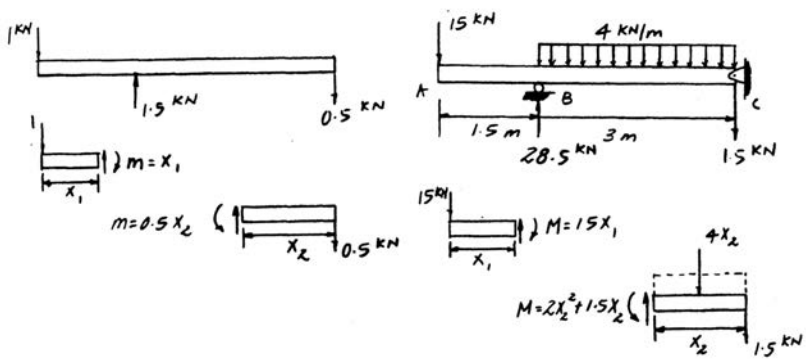

14–89. Determine the displacement at point C. EI is constant.

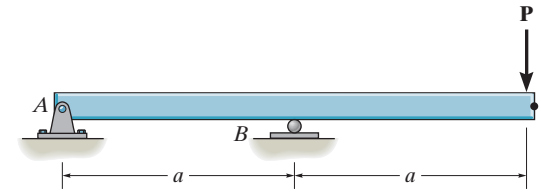

$$1 \cdot \Delta_C = \int_0^L \frac{mM}{EI} dx$$

$$\Delta_C = \frac{1}{EI}\left[\int_0^a (x_1)(Px_1)dx_1 + \int_0^a (x_2)(Px_2)dx_2\right]$$

$$= \frac{2Pa^3}{3EI}$$ **Ans.**

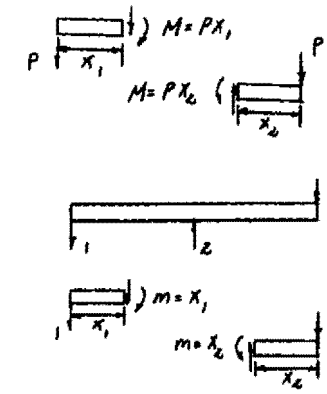

Ans:

$$\Delta_C = \frac{2Pa^3}{3EI}$$

14–90. Determine the slope at point C. EI is constant.

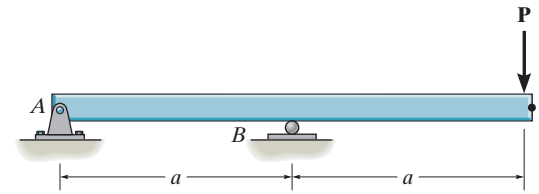

$$1 \cdot \theta_C = \int_0^L \frac{m_\theta M dx}{EI}$$

$$\theta_C = \int_0^a \frac{\left(\frac{x_1}{a}\right) P x_1 dx_1}{EI} + \int_0^a \frac{(1) P x_2 dx_2}{EI}$$

$$= \frac{Pa^2}{3EI} + \frac{Pa^2}{2EI} = \frac{5Pa^2}{6EI}$$ **Ans.**

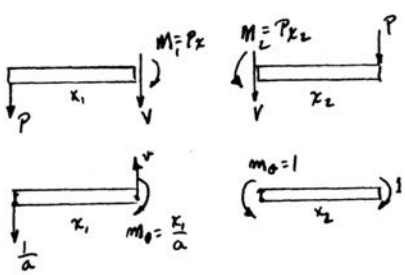

Ans:

$$\theta_C = -\frac{5Pa^2}{6EI}$$

14–91. Determine the slope at point A. EI is constant.

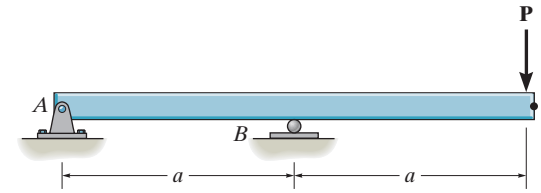

$$1 \cdot \theta_A = \int_0^L \frac{m_\theta M}{EI} dx$$

$$\theta_A = \frac{1}{EI}\left[\int_0^a \left(1 - \frac{x_1}{a}\right)(Px_1)\,dx_1 + \int_0^a (0)\,(Px_2)\,dx_2\right] = \frac{Pa^2}{6EI}$$ **Ans.**

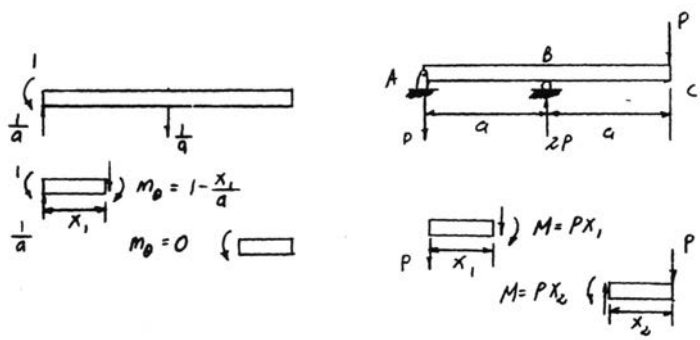

Ans:

$$\theta_A = \frac{Pa^2}{6EI}$$

***14–92.** Determine the displacement of point C of the beam made from A992 steel and having a moment of inertia of $I = 53.8\ \text{in}^4$.

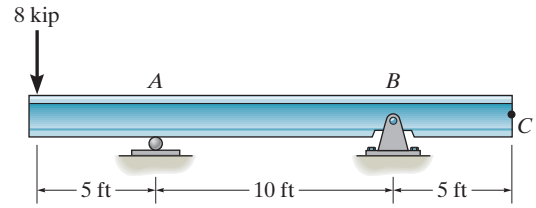

$$1 \cdot \Delta_C = \int_0^L \frac{mM}{EI}\,dx$$

$$\Delta_C = \frac{1}{EI}\left[0 + \int_0^{120} (60 - 0.5x_2)(4x_2)\,dx_2 + 0\right]$$

$$= \frac{576\,000}{EI} = \frac{576\,000}{29(10^3)(53.8)} = 0.369\ \text{in.}$$ **Ans.**

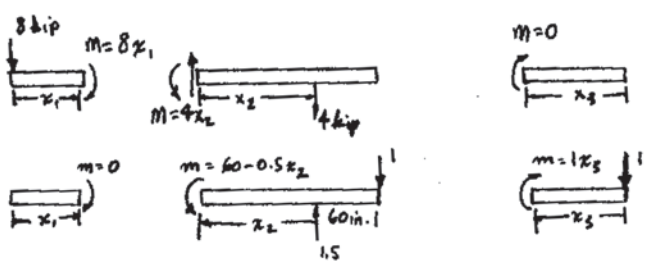

14–93. Determine the slope at B of the beam made from A992 steel and having a moment of inertia of $I = 53.8\ \text{in}^4$.

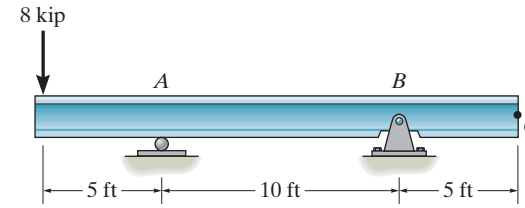

$$1 \cdot \theta_B = \int_0^L \frac{m_\theta M}{EI} dx$$

$$\theta_B = \frac{1}{EI}\left[\int_0^5 (0)(8x_1)\,dx_1 + \int_0^{10} (1 - 0.1x_2)4x_2\,dx_2\right]$$

$$= \frac{66.67\ \text{kip}\cdot\text{ft}^2}{EI} = \frac{66.67(12^2)}{29(10^3)(53.8)} = 6.153(10^{-3})\ \text{rad} = 0.353^\circ \qquad \textbf{Ans.}$$

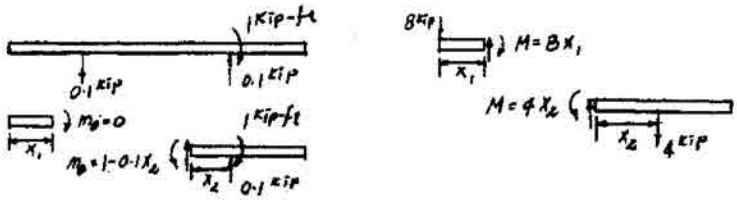

Ans:
$\theta_B = -0.353^\circ$

14–94. The beam is made of Douglas fir. Determine the slope at C.

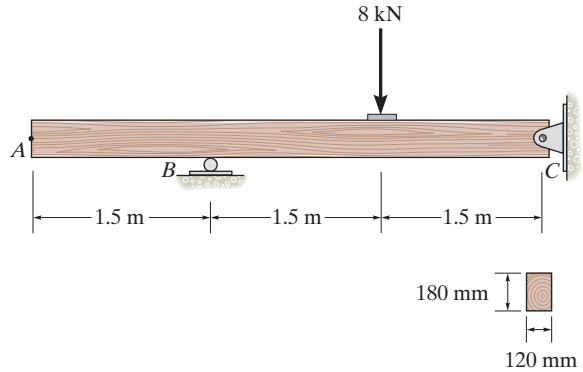

Virtual Work Equation: For the slope at point C.

$$1 \cdot \theta = \int_0^L \frac{m_\theta M}{EI}\, dx$$

$$1\ \text{kN} \cdot \text{m} \cdot \theta_C = 0 + \frac{1}{EI}\int_0^{1.5\ \text{m}} (0.3333x_2)(4.00x_2)\, dx_2$$

$$+ \frac{1}{EI}\int_0^{1.5\ \text{m}} (1 - 0.3333x_3)(4.00x_3) dx_3$$

$$\theta_C = \frac{4.50\ \text{kN} \cdot \text{m}^3}{EI}$$

$$= -\frac{4.50(1000)}{13.1(10^9)\left[\frac{1}{12}(0.12)(0.18^3)\right]}$$

$$= 5.89\left(10^{-3}\right)\ \text{rad}$$ **Ans.**

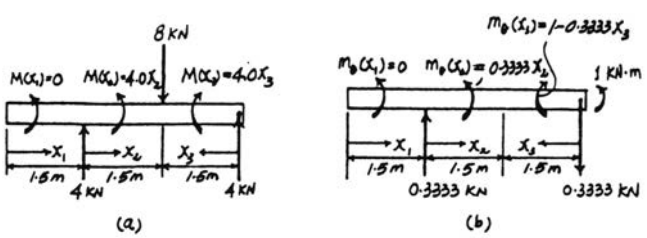

Ans:
$\theta_C = 5.89\,(10^{-3})$ rad

14–95. Determine the displacement at pulley B. The A992 steel shaft has a diameter of 30 mm.

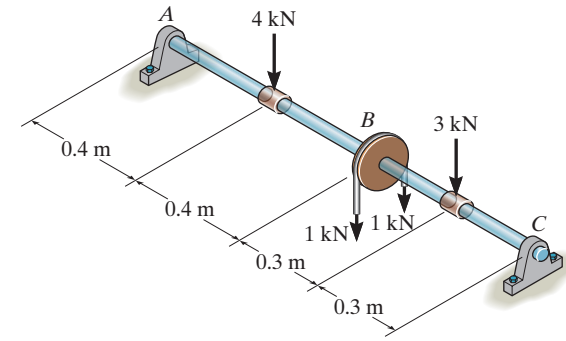

$$1 \cdot \Delta_B = \int_0^L \frac{mM}{EI}\,dx$$

$$\Delta_B = \frac{1}{EI}\left[\int_0^{0.4}(0.4286x_1)(4.357x_1)\,dx_1 + \int_0^{0.4} 0.4286\,(x_2+0.4)(0.357x_2+1.7428)\,dx_2\right.$$

$$\left.\int_0^{0.3}(0.5714x_3)(4.643x_3)\,dx_3 + \int_0^{0.3} 0.5714\,(x_4+0.3)(1.643x_4+1.3929)\,dx_4\right]$$

$$= \frac{0.37972\ \text{kN}\cdot\text{m}^3}{EI} = \frac{0.37972(10^3)}{200(10^9)\left(\frac{\pi}{4}\right)(0.015^4)} = 0.0478\ \text{m} = 47.8\ \text{mm} \qquad \textbf{Ans.}$$

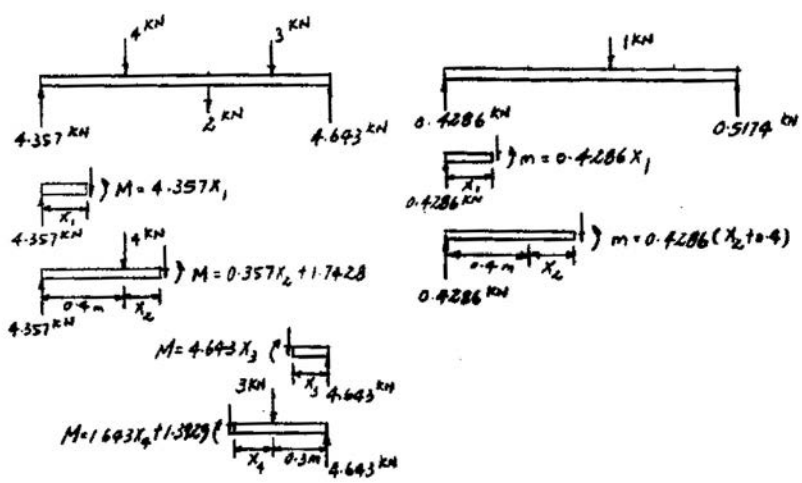

Ans:
$\Delta_B = 47.8$ mm

***14–96.** The A992 steel beam has a moment of inertia of $I = 125(10^6)\ \text{mm}^4$. Determine the displacement at D.

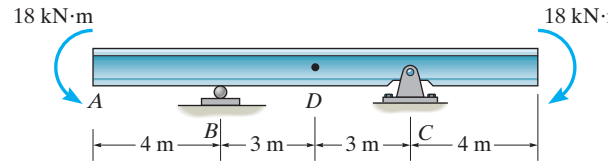

$$1 \cdot \Delta_D = \int_0^L \frac{mM}{EI}\,dx$$

$$\Delta_D = (2)\frac{1}{EI}\left[\int_0^3 (0.5x_2)(18)\,dx_2\right] = \frac{81\ \text{kN}\cdot\text{m}^3}{EI} = \frac{81(10^3)}{200(10^9)(125)(10^{-6})}$$

$$= 3.24(10^{-3}) = 3.24\ \text{mm}$$ **Ans.**

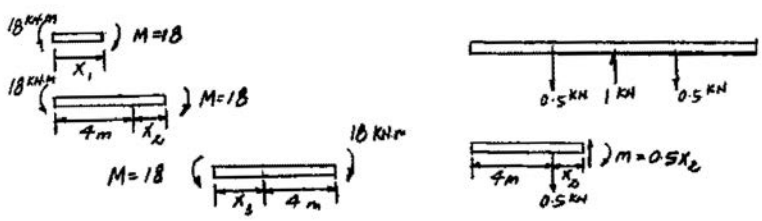

14–97. The A992 steel beam has a moment of inertia of $I = 125(10^6)\ \text{mm}^4$. Determine the slope at A.

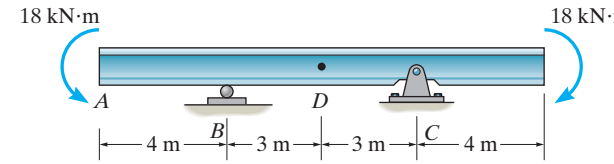

$$1 \cdot \theta_A = \int_0^L \frac{m_\theta M}{EI}\,dx$$

$$\theta_A = \frac{1}{EI}\left[\int_0^4 (1)(18)(dx_1) + \int_0^6 (0.1667x_3)(18)\,dx_3\right] = \frac{126\ \text{kN}\cdot\text{m}^2}{EI}$$

$$= \frac{126(10^3)}{200(10^9)(125)(10^{-6})} = 5.04(10^{-3})\ \text{rad} = 0.289^\circ \qquad \textbf{Ans.}$$

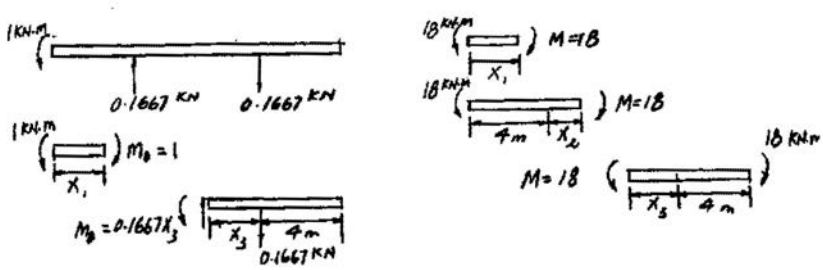

Ans:
$\theta_A = 0.289^\circ$

14–98. The A992 structural steel beam has a moment of inertia of $I = 125(10^6)\ \text{mm}^4$. Determine the slope of the beam at B.

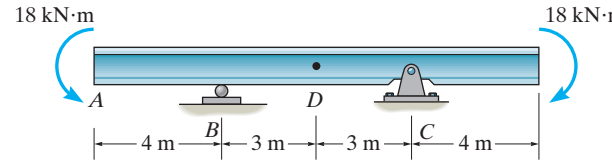

$$1 \cdot \theta_B = \int_0^L \frac{m_\theta M}{EI} dx$$

$$\theta_B = 0 + \frac{1}{EI}\int_0^6 \frac{\left(-\frac{1}{6}x_2 + 1\right)(18)dx}{EI}$$

$$= \frac{54}{EI} = \frac{54\,(10^3)}{200\,(10^9)\,(125\,(10^{-6}))} = 0.00216\ \text{rad} = 0.124°$$ **Ans.**

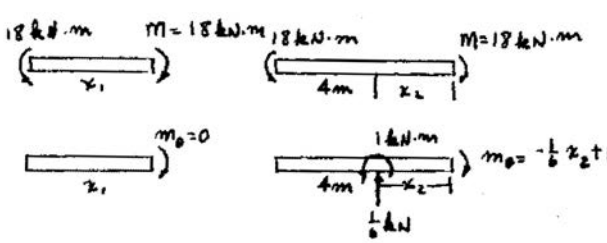

Ans:
$\theta_B = 0.124°$

14–99. Determine the displacement at C of the shaft. EI is constant.

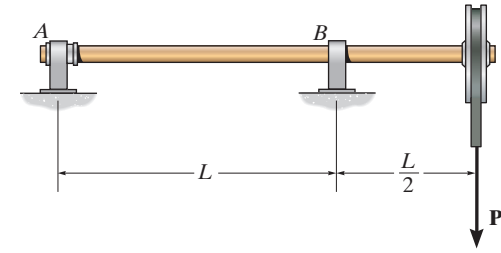

Real Moment Function *M*. As indicated in Fig. *a*.

Virtual Moment Function *m*. As indicated in Fig. *b*.

Virtual Work Equation.

$$1 \cdot \Delta = \int_0^L \frac{mM}{EI} dx$$

$$1 \cdot \Delta_C = \frac{1}{EI}\left[\int_0^L \left(\frac{x_1}{2}\right)\left(\frac{P}{2}x_1\right) dx_1 + \int_0^{L/2} x_2(Px_2)\, dx_2\right]$$

$$\Delta_C = \frac{PL^3}{8EI} \downarrow \qquad \textbf{Ans.}$$

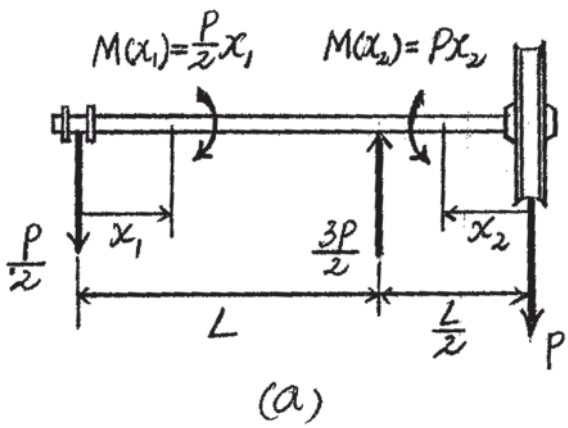

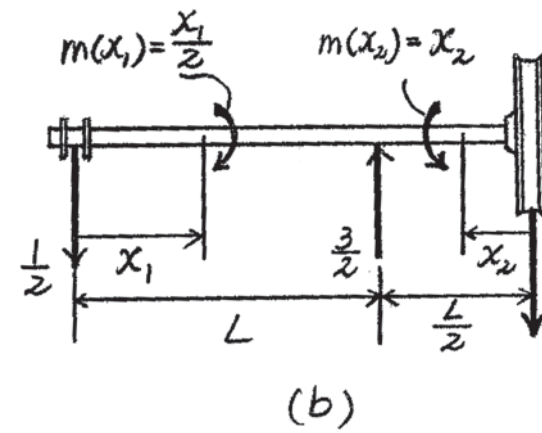

Ans:

$$\Delta_C = \frac{PL^3}{8EI}$$

***14–100.** Determine the slope at A of the shaft. EI is constant.

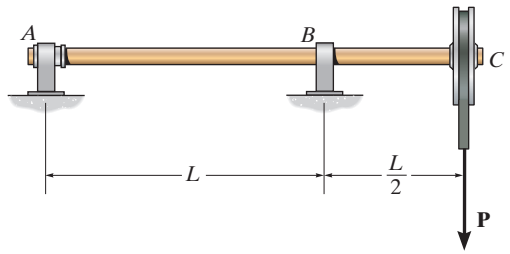

Real Moment Function *M*. As indicated in Fig. *a*.

Virtual Moment Function *M*. As indicated in Fig. *b*.

Virtual Work Equation.

$$1 \cdot \theta = \int_0^L \frac{m_\theta M}{EI}\, dx$$

$$1 \cdot \theta_A = \frac{1}{EI}\left[\int_0^L \left(1 - \frac{x_1}{L}\right)\left(\frac{P}{2}x_1\right) dx_1 + \int_0^{L/2} (0)\,(Px_2)\, dx_2\right]$$

$$\theta_A = \frac{PL^2}{12EI}$$ **Ans.**

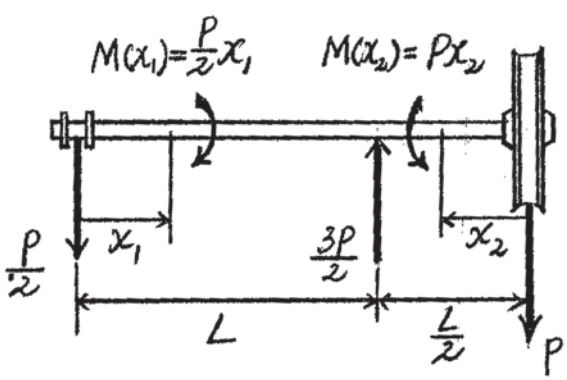

(a)

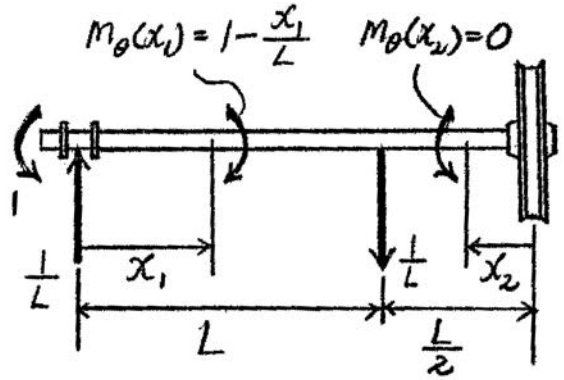

(b)

14–101. Determine the slope of end C of the overhang beam. EI is constant.

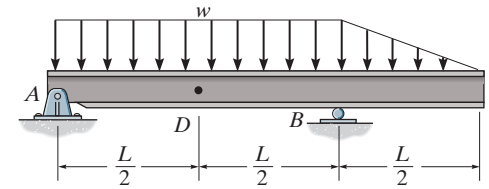

Real Moment Function M. As indicated in Fig. a.

Virtual Moment Function m_θ. As indicated in Fig. b.

Virtual Work Equation.

$$1 \cdot \theta = \int_0^L \frac{m_\theta M}{EI}\, dx$$

$$1 \cdot \theta_C = \frac{1}{EI}\left[\int_0^L \left(-\frac{x_1}{L}\right)\left[\frac{w}{24}\left(11Lx_1 - 12{x_1}^2\right)\right]dx_1 + \int_0^{L/2} (1)\left(\frac{w}{3L}{x_2}^3\right)dx_2\right]$$

$$\theta_C = \frac{1}{EI}\left[\frac{w}{24L}\int_0^L \left(12{x_1}^3 - 11L{x_1}^2\right)dx_1 + \frac{w}{3L}\int_0^{L/2} {x_2}^3\, dx_2\right]$$

$$\theta_C = -\frac{13wL^3}{576EI} = \frac{13wL^3}{576EI}$$ **Ans.**

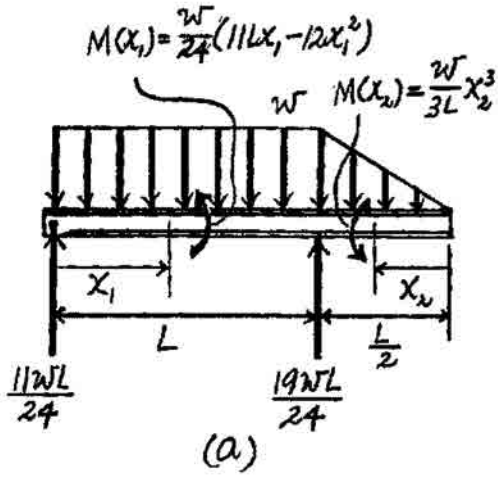

(a)

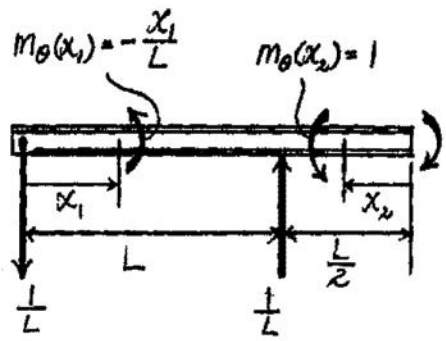

(b)

Ans:

$$\theta_C = -\frac{13wL^3}{576\,EI}$$

14–102. Determine the displacement of point D of the overhang beam. EI is constant.

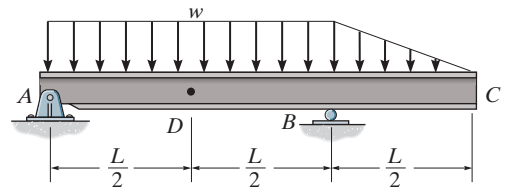

Real Moment Function M. As indicated in Fig. a.

Virtual Moment Function m. As indicated in Fig. b.

Virtual Work Equation.

$$1 \cdot \Delta = \int_0^L \frac{mM}{EI}\,dx$$

$$1 \cdot \Delta_D = \frac{1}{EI}\left[\int_0^{L/2}\left(\frac{x_1}{2}\right)\left[\frac{w}{24}\left(11Lx_1 - 12{x_1}^2\right)\right]dx_1 + \int_0^{L/2}\left(\frac{x_2}{2}\right)\left[\frac{w}{24}\left(13Lx_2 - 12{x_2}^2 - L^2\right)\right]dx_2\right]$$

$$\Delta_D = \frac{w}{48EI}\left[\int_0^{L/2}\left(11L{x_1}^2 - 12{x_1}^3\right)dx_1 + \int_0^{L/2}\left(13L{x_2}^2 - 12{x_2}^3 - L^2x_2\right)dx_2\right]$$

$$\Delta_D = \frac{wL^4}{96EI}\downarrow$$ **Ans.**

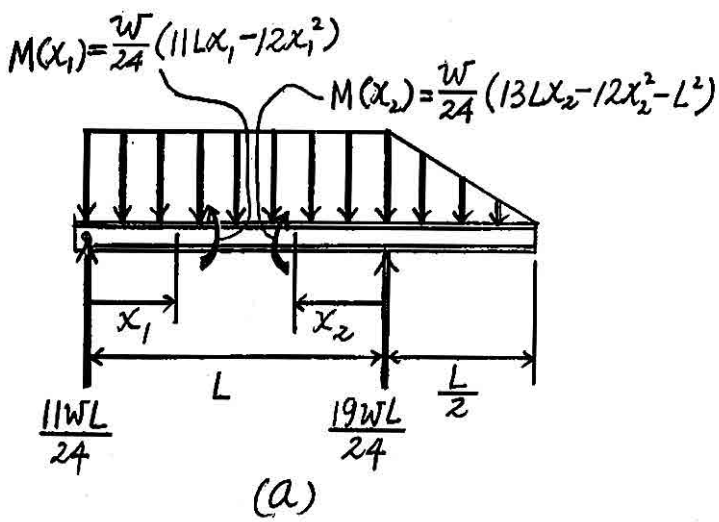

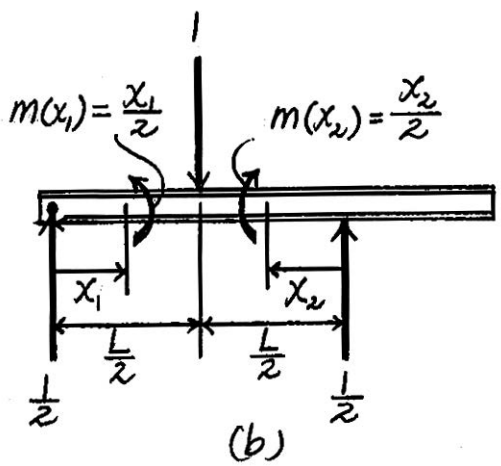

Ans:
$\Delta_D = \dfrac{wL^4}{96\,EI}\downarrow$

14–103. Determine the slope at A of the 2014-T6 aluminum shaft having a diameter of 100 mm.

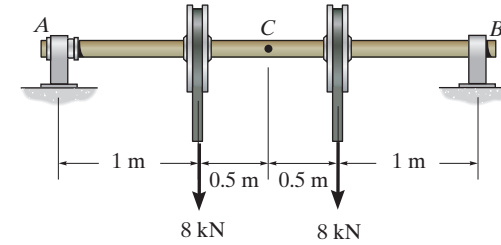

Real Moment Function *M*. As indicated in Fig. *a*.

Virtual Moment Function *m*. As indicated in Fig. *b*.

Virtual Work Equation.

$$1 \cdot \theta = \int_0^L \frac{m_\theta M}{EI} dx$$

$$1\ \text{kN} \cdot \text{m} \cdot \theta_A = \frac{1}{EI}\left[\int_0^{1\,\text{m}} (1 - 0.3333x_1)(8x_1)\,dx_1 + \int_0^{1\,\text{m}} [0.3333(x_2+1)]8dx_2 + \int_0^{1\,\text{m}} (0.3333x_3)(8x_3)\,dx_3\right]$$

$$\theta_A = \frac{1}{EI}\left[8\int_0^{1\,\text{m}} (1 - 0.3333x_1)\,dx_1 + 2.6667\int_0^{1\,\text{m}} (x_2 + 1)\,dx_2 + 2.6667\int_0^{1\,\text{m}} x_3^2 dx_3\right]$$

$$= \frac{8\ \text{kN} \cdot \text{m}^2}{EI}$$

$$= \frac{8(10^3)}{73.1(10^9)\left[\frac{\pi}{4}(0.05^4)\right]}$$

$$= 0.02229\ \text{rad} = 0.0223\ \text{rad}$$ **Ans.**

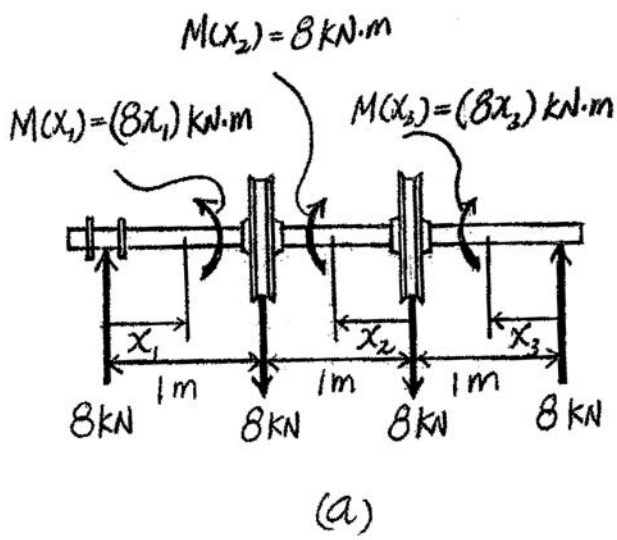

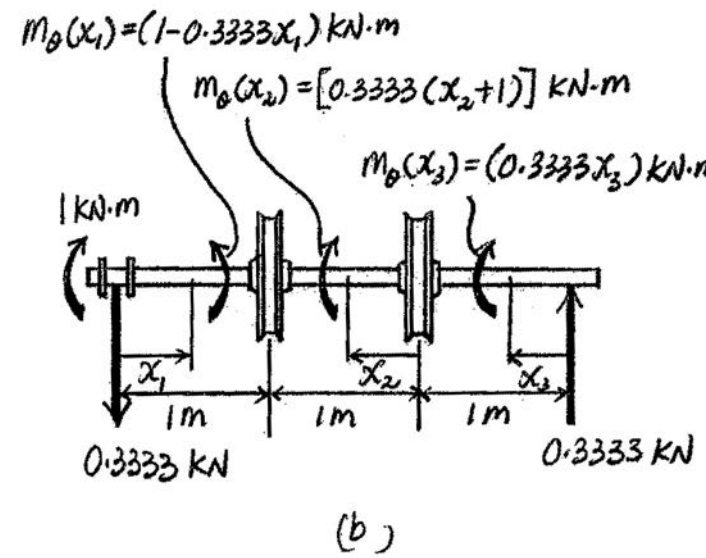

Ans:
$\theta_A = -0.0223$ rad

***14–104.** Determine the displacement at C of the 2014-T6 aluminum shaft having a diameter of 100 mm.

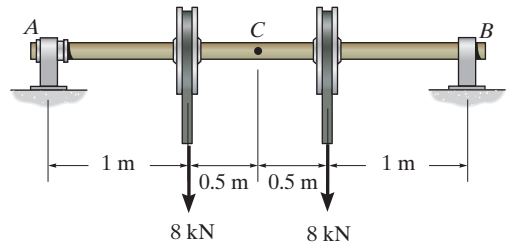

Real Moment Function *M*. As indicated in Fig. *a*.

Virtual Moment Function *m*. As indicated in Fig. *b*.

Virtual Work Equation.

$$1 \cdot \Delta = \int_0^L \frac{mM}{EI} dx$$

$$1 \cdot \Delta_C = 2\left[\frac{1}{EI}\left[\int_0^{1\text{ m}} (0.5x_1)(8x_1)dx_1 + \int_0^{0.5\text{ m}} [0.5(x_2 + 1)](8)dx_2\right]\right]$$

$$\Delta_C = \frac{2}{EI}\left[\int_0^{1\text{ m}} 4x_1^2 dx_1 + \int_0^{0.5\text{ m}} 4(x_2 + 1)dx_2\right]$$

$$= \frac{7.6667\text{ kN}\cdot\text{m}^3}{EI}$$

$$= \frac{7.6667(10^3)}{73.1(10^9)\left[\frac{\pi}{4}(0.05^4)\right]}$$

$$= 0.02137\text{ m} = 21.4\text{ mm} \downarrow$$ **Ans.**

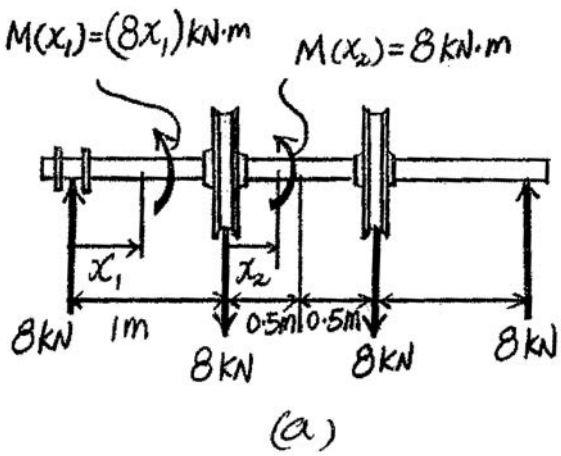

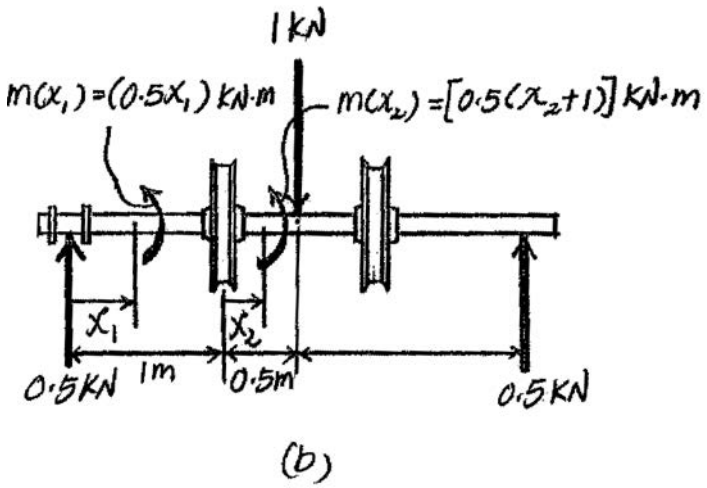

14–105. Determine the displacement of point B. The moment of inertia of the center portion DG of the shaft is $2I$, whereas the end segments AD and GC have a moment of inertia I. The modulus of elasticity for the material is E.

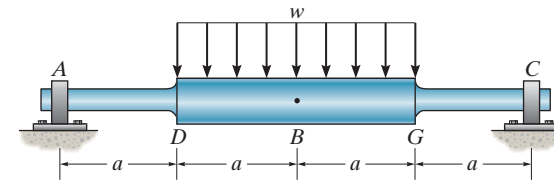

Real Moment Function $M(x)$: As shown on Fig. a.

Virtual Moment Functions $m(x)$: As shown on Fig. b.

Virtual Work Equation: For the slope at point B, apply Eq. 14–42.

$$1 \cdot \Delta = \int_0^L \frac{mM}{EI}\,dx$$

$$1 \cdot \Delta_B = 2\left[\frac{1}{EI}\int_0^a \left(\frac{x_1}{2}\right)(w\,a x_1)dx_1\right]$$

$$+\,2\left[\frac{1}{2EI}\int_0^a \frac{1}{2}(x_2 + a)\left[wa(a + x_2) - \frac{w}{2}x_2^2\right]dx_2\right]$$

$$\Delta_B = \frac{65wa^4}{48EI} \quad \downarrow$$ **Ans.**

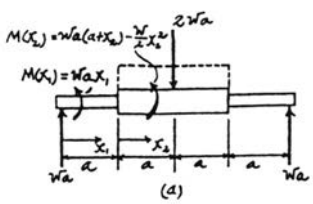

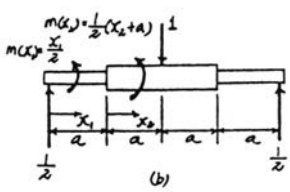

Ans:

$$\Delta_B = \frac{65wa^4}{48EI}$$

14–106. Determine the displacement of point C of the W14 × 26 beam made from A992 steel.

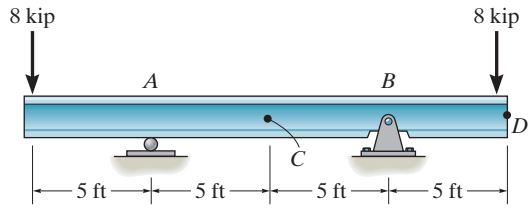

$$1 \cdot \Delta_C = \int_0^L \frac{m\,M}{E\,I}\,dx$$

$$\Delta_C = 0 + 2\int_0^{60} \frac{\left(-\frac{x}{2}\right)(-480)}{E\,I}\,dx$$

$$= \frac{864\,000}{29(10^3)(245)} = 0.122 \text{ in.}$$ **Ans.**

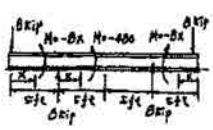

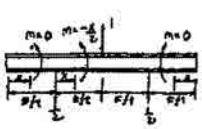

Ans:
$\Delta_C = 0.122$ in.

14–107. Determine the slope at A of the W14 × 26 beam made from A992 steel.

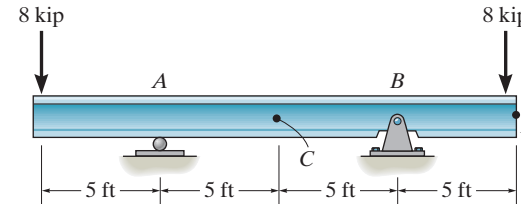

$$1 \cdot \theta_A = \int_0^L \frac{m_\theta M}{EI} dx$$

$$\theta_A = 0 + \int_0^{120} \frac{\left(\frac{x}{120} - 1\right)(-480)}{EI} dx$$

$$= \frac{28\,800}{29(10^3)(245)} = 4.05(10^{-3}) \text{ rad}$$ **Ans.**

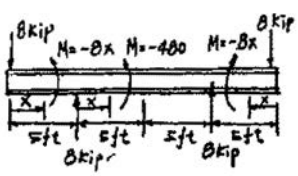

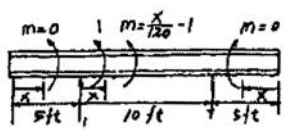

Ans:
$\theta_A = 4.05\,(10^{-3})$ rad

***14–108.** Determine the slope at A. EI is constant.

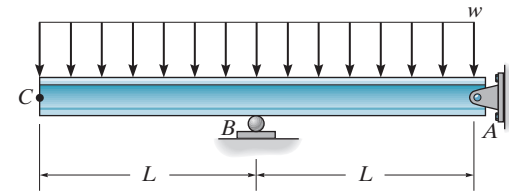

$$\theta_A = \int_0^L \frac{m_\theta M}{EI} dx$$

$$= 0 + \int_0^L \frac{\left(\frac{x}{L} - 1\right)\left(\frac{-wx^2}{2}\right)}{EI} dx$$

$$= \frac{-\frac{wL^4}{8L} + \frac{wL^3}{6}}{EI} = \frac{wL^3}{24\,EI}$$ **Ans.**

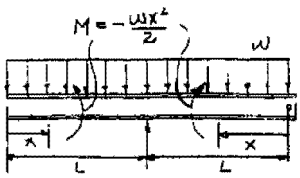

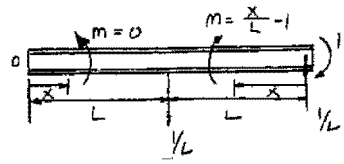

14–109. Determine the slope at end C of the overhang white spruce beam.

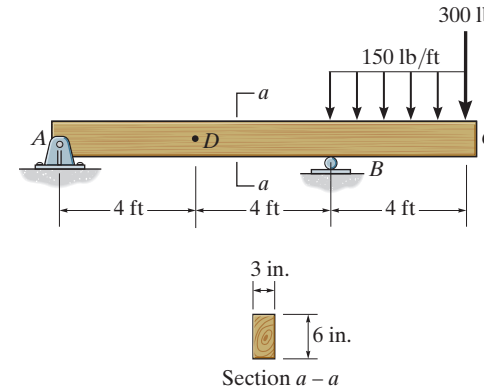

Real Moment Function *M*. As indicated in Fig. *a*.

Virtual Moment Functions *m*. As indicated in Fig. *b*.

Virtual Work Equation.

$$1 \cdot \theta = \int_0^L \frac{m_\theta M}{EI} dx$$

$$1 \text{ lb} \cdot \text{ft} \cdot \theta_C = \frac{1}{EI}\left[\int_0^{8\text{ ft}} (0.125x_1)(300x_1)dx_1 + \int_0^{4\text{ ft}} (1)(75x_2^2 + 300x_2)dx_2\right]$$

$$\theta_C = \frac{1}{EI}\left[\int_0^{8\text{ ft}} 37.5x_1^2 dx_1 + \int_0^{4\text{ ft}} (75x_2^2 + 300x_2)dx_2\right]$$

$$= \frac{10\,400 \text{ lb} \cdot \text{ft}^2}{EI}$$

$$= \frac{10\,400(12^2)}{1.40(10^6)\left[\frac{1}{12}(3)(6^3)\right]}$$

$$= 0.01981 \text{ rad} = 0.0198 \text{ rad}$$ **Ans.**

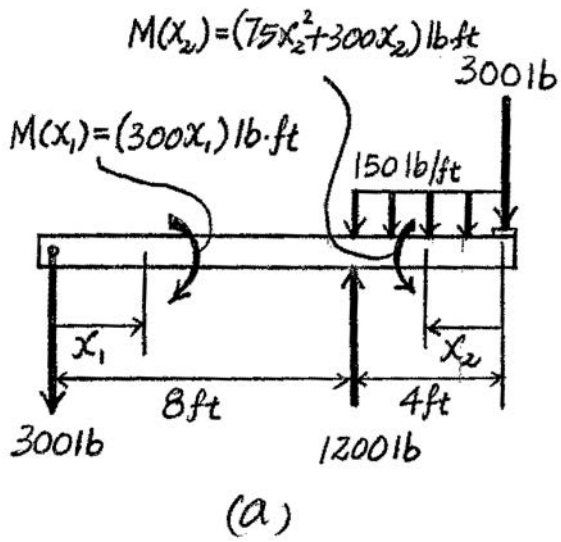

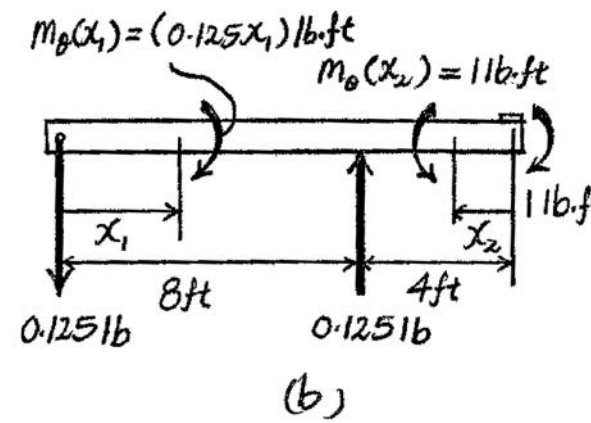

Ans:
$\theta_C = -0.0198$ rad

14–110. Determine the displacement at point D of the overhang white spruce beam.

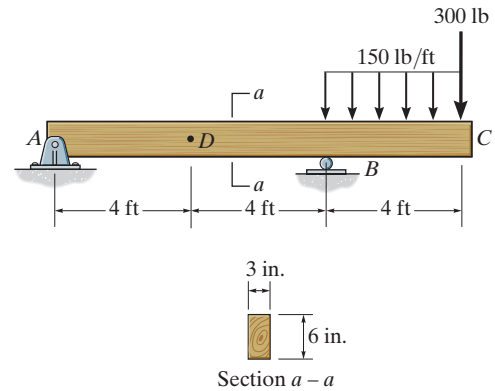

Real Moment Functions *M*. As indicated in Fig. *a*.

Virtual Moment Functions *m*. As indicated in Fig. *b*.

Virtual Work Equation.

$$1 \cdot \Delta = \int_0^L \frac{mM}{EI} dx$$

$$1 \text{ lb} \cdot \Delta_D = \frac{1}{EI}\left[\int_0^{4\text{ ft}} (-0.5x_1)(300x_1)dx_1 + \int_0^{4\text{ ft}} (-0.5x_2)(-300x_2 + 2400)dx_2\right]$$

$$\Delta_D = \frac{1}{EI}\left[\int_0^{4\text{ ft}} -150x_1^2 dx_1 + \int_0^{4\text{ ft}} (150x_2^2 - 1200x_2)dx_2\right]$$

$$= -\frac{9600 \text{ lb} \cdot \text{ft}^3}{EI}$$

$$= -\frac{9600(12^3)}{1.4(10^6)\left[\frac{1}{12}(3)(6^3)\right]}$$

$$= -0.2194 \text{ in.} = 0.219 \text{ in.} \uparrow \qquad \textbf{Ans.}$$

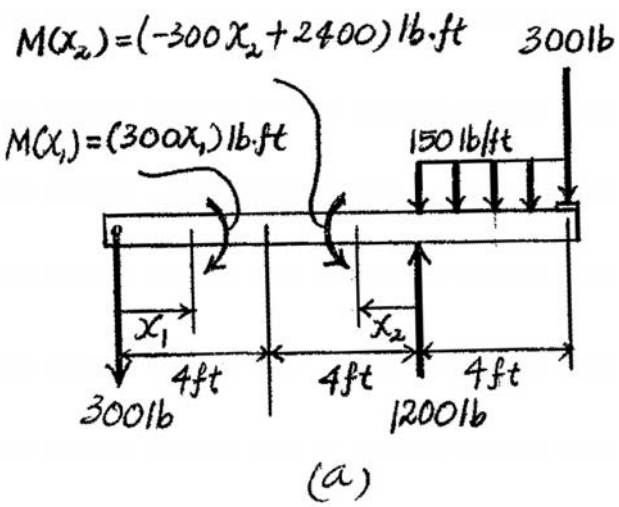

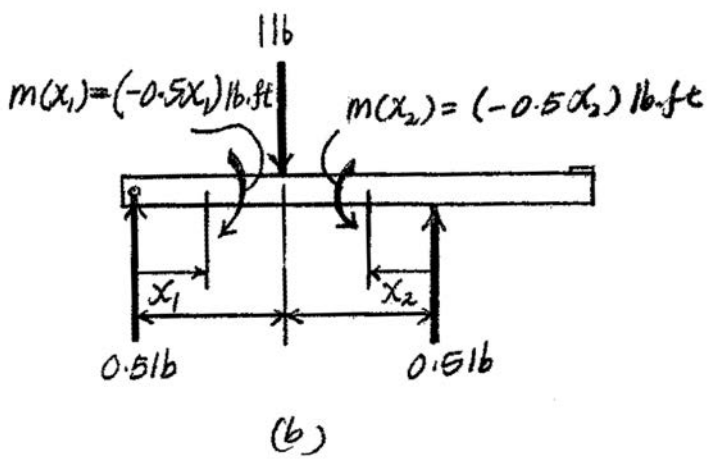

Ans:
$\Delta_D = 0.219$ in.

14–111. The simply supported beam having a square cross section is subjected to a uniform load w. Determine the maximum deflection of the beam caused only by bending, and caused by bending and shear. Take $E = 3G$.

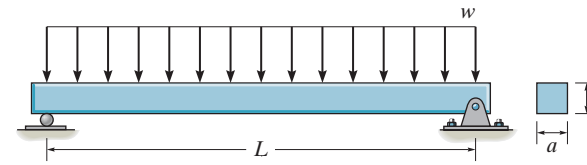

For bending and shear,

$$1 \cdot \Delta = \int_0^L \frac{mM}{EI}\,dx + \int_0^L \frac{f_s vV}{GA}\,dx$$

$$\Delta = 2\int_0^{L/2} \frac{\left(\frac{1}{2}x\right)\left(\frac{wL}{2}x - w\frac{x^2}{2}\right)dx}{EI} + 2\int_0^{L/2} \frac{\left(\frac{6}{5}\right)\left(\frac{1}{2}\right)\left(\frac{wL}{2} - wx\right)dx}{GA}$$

$$= \frac{1}{EI}\left(\frac{wL}{6}x^3 - \frac{wx^4}{8}\right)\Bigg|_0^{L/2} + \frac{\left(\frac{6}{5}\right)}{GA}\left(\frac{wL}{2}x - \frac{wx^2}{2}\right)\Bigg|_0^{L/2}$$

$$= \frac{5wL^4}{384EI} + \frac{3wL^2}{20\,GA}$$

$$\Delta = \frac{5wL^4}{384(3G)\left(\frac{1}{12}\right)a^4} + \frac{3wL^2}{20(G)a^2}$$

$$= \frac{20wL^4}{384Ga^4} + \frac{3wL^2}{20Ga^2}$$

$$= \left(\frac{w}{G}\right)\left(\frac{L}{a}\right)^2\left[\left(\frac{5}{96}\right)\left(\frac{L}{a}\right)^2 + \frac{3}{20}\right] \qquad \textbf{Ans.}$$

For bending only,

$$\Delta = \frac{5w}{96G}\left(\frac{L}{a}\right)^4 \qquad \textbf{Ans.}$$

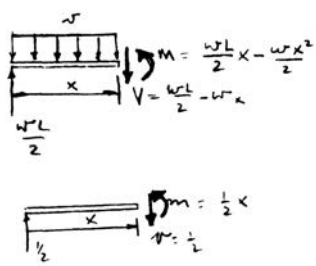

Ans:

$$\Delta_{\text{tot}} = \left(\frac{w}{G}\right)\left(\frac{L}{a}\right)^2\left[\left(\frac{5}{96}\right)\left(\frac{L}{a}\right)^2 + \frac{3}{20}\right],$$

$$\Delta_b = \frac{5w}{96G}\left(\frac{L}{a}\right)^4$$

***14–112.** Determine the displacement of the shaft C. EI is constant.

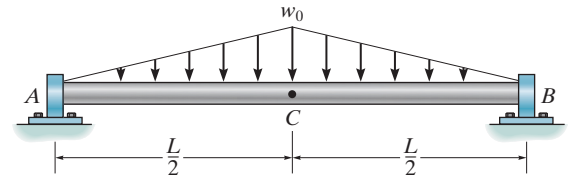

$$1 \cdot \Delta_C = \int_0^L \frac{mM}{EI}\,dx$$

$$\Delta_C = 2\left(\frac{1}{EI}\right)\int_0^{\frac{L}{2}}\left(\frac{1}{2}x_1\right)\left(\frac{w_0 L}{4}x_1 - \frac{w_0}{3L}x_1^3\right)dx_1$$

$$= \frac{w_0 L^4}{120\,EI}$$ **Ans.**

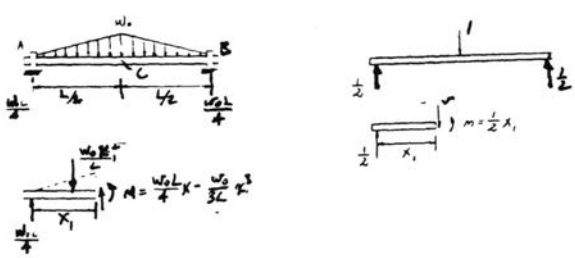

14–113. Determine the slope of the shaft at the bearing support A. EI is constant.

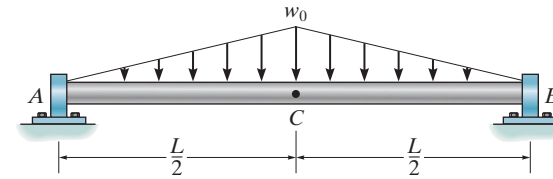

$$1 \cdot \theta_A = \int_0^L \frac{m_\theta M}{EI} dx$$

$$\theta_A = \frac{1}{EI}\left[\int_0^{\frac{L}{2}} \left(1 - \frac{1}{L}x_1\right)\left(\frac{w_0 L}{4}x_1 - \frac{w_0}{3L}x_1^3\right)dx_1\right.$$

$$+ \int_0^{\frac{L}{2}} \left(\frac{1}{L}x_2\right)\left(\frac{w_0 L}{4}x_2 - \frac{w_0}{3L}x_2^3\right)dx_2$$

$$= \frac{5w_0 L^3}{192EI}$$ **Ans.**

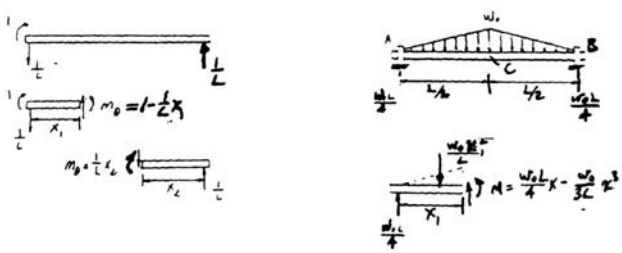

Ans:

$$\theta_A = -\frac{5w_0 L^3}{192\,EI}$$

14–114. Determine the vertical displacement of point A on the angle bracket due to the concentrated force **P**. The bracket is fixed connected to its support. EI is constant. Consider only the effect of bending.

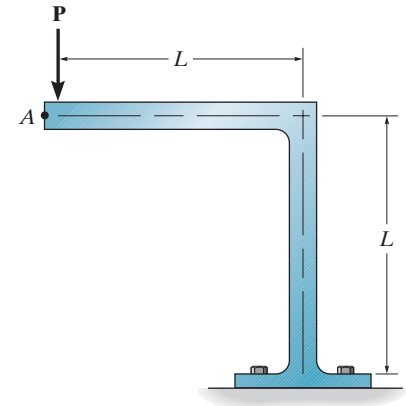

$$1 \cdot \Delta_{A_v} = \int_0^L \frac{mM}{EI}\,dx$$

$$\Delta_{A_v} = \frac{1}{EI}\left[\int_0^L (x_1)(Px_1)dx_1 + \int_0^L (1L)(PL)dx_2\right]$$

$$= \frac{4PL^3}{3EI}$$ **Ans.**

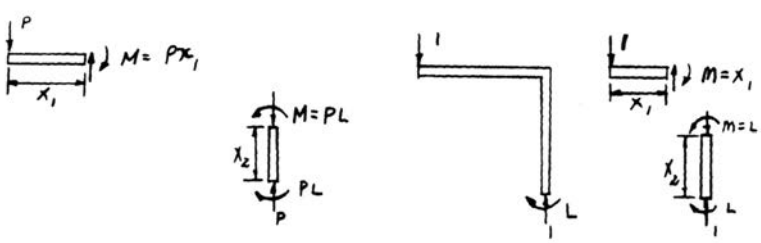

Ans:

$$(\Delta_A)_v = \frac{4PL^3}{3EI}$$

14–115. Beam AB has a square cross section of 100 mm by 100 mm. Bar CD has a diameter of 10 mm. If both members are made of A992 steel, determine the vertical displacement of point B due to the loading of 10 kN.

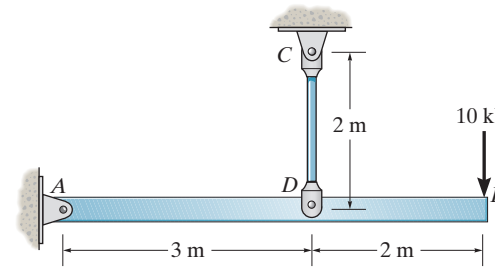

Real Moment Function $M(x)$: As shown in Figure a.

Virtual Moment Functions $m(x)$: As shown in Figure b.

Virtual Work Equation: For the displacement at point B,

$$1 \cdot \Delta = \int_0^L \frac{mM}{EI}\,dx + \frac{nNL}{AE}$$

$$1\text{ kN} \cdot \Delta_B = \frac{1}{EI}\int_0^{3\text{ m}} (0.6667x_1)(6.667x_1)dx_1$$

$$+ \frac{1}{EI}\int_0^{2\text{ m}} (1.00x_2)(10.0x_2)dx_2$$

$$+ \frac{1.667(16.667)(2)}{AE}$$

$$\Delta_B = \frac{66.667\text{ kN}\cdot\text{m}^3}{EI} + \frac{55.556\text{ kN}\cdot\text{m}}{AE}$$

$$= \frac{66.667(1000)}{200(10^9)\left[\frac{1}{12}(0.1)(0.1^3)\right]} + \frac{55.556(1000)}{\left[\frac{\pi}{4}(0.01^2)\right]\left[200(10^9)\right]}$$

$$= 0.04354\text{ m} = 43.5\text{ mm} \quad \downarrow$$ **Ans.**

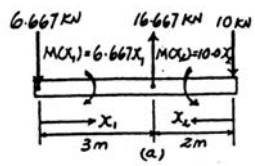

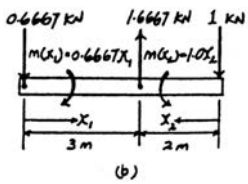

Ans:
$\Delta_B = 43.5$ mm

***14–116.** Beam AB has a square cross section of 100 mm by 100 mm. Bar CD has a diameter of 10 mm. If both members are made of A992 steel, determine the slope at A due to the loading of 10 kN.

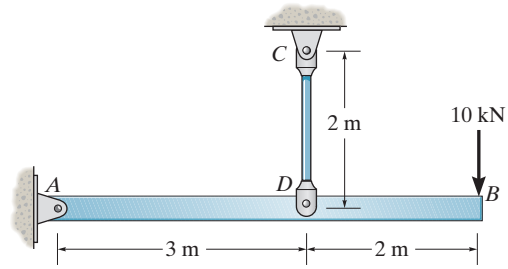

Real Moment Function $M(x)$: As shown in Figure a.

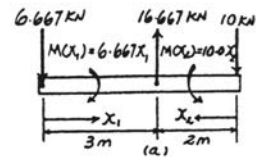

Virtual Moment Functions $m_\theta(x)$: As shown in Figure b.

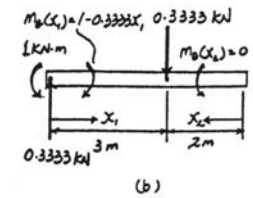

Virtual Work Equation: For the slope at point A,

$$1 \cdot \theta = \int_0^L \frac{m_\theta M}{EI}\,dx + \frac{nNL}{AE}$$

$$1\ \text{kN}\cdot\text{m}\cdot\theta_A = \frac{1}{EI}\int_0^{3\ \text{m}} (1 - 0.3333x_1)(6.667x_1)dx_1$$

$$+ \frac{1}{EI}\int_0^{2\ \text{m}} 0(10.0x_2)dx_2 + \frac{(-0.3333)(16.667)(2)}{AE}$$

$$\theta_A = \frac{10.0\ \text{kN}\cdot\text{m}^2}{EI} - \frac{11.111\ \text{kN}}{AE}$$

$$= \frac{10.0(1000)}{200\left(10^9\right)\left[\frac{1}{12}(0.1)\left(0.1^3\right)\right]} - \frac{11.111(1000)}{\left[\frac{\pi}{4}\left(0.01^2\right)\right]\left[200\left(10^9\right)\right]}$$

$$= 0.00530\ \text{rad}$$ **Ans.**

14–117. Bar ABC has a rectangular cross section of 300 mm by 100 mm. Attached rod DB has a diameter of 20 mm. If both members are made of A-36 steel, determine the vertical displacement of point C due to the loading. Consider only the effect of bending in ABC and axial force in DB.

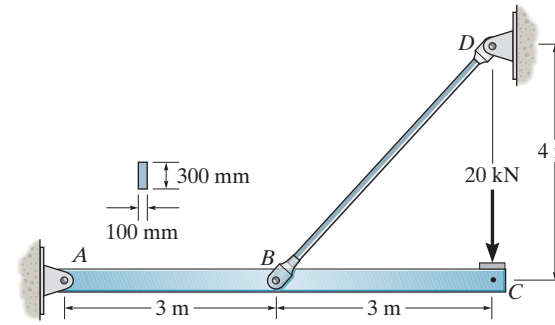

Real Moment Function $M(x)$: As shown in Figure *a*.

Virtual Moment Functions $m(x)$: As shown in Figure *b*.

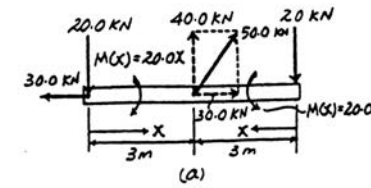

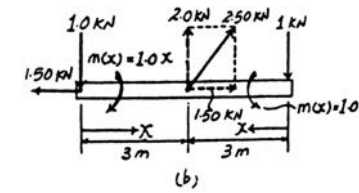

Virtual Work Equation: For the displacement at point C,

$$1 \cdot \Delta = \int_0^L \frac{mM}{EI}\,dx + \frac{nNL}{AE}$$

$$1\text{ kN} \cdot \Delta_C = 2\left[\frac{1}{EI}\int_0^{3\text{ m}} (1.00x)(20.0x)\,dx\right] + \frac{2.50(50.0)\,(5)}{AE}$$

$$\Delta_C = \frac{360\text{ kN}\cdot\text{m}^3}{EI} + \frac{625\text{ kN}\cdot\text{m}}{AE}$$

$$= \frac{360(1000)}{200\left(10^9\right)\left[\frac{1}{12}(0.1)\left(0.3^3\right)\right]} + \frac{625(1000)}{\left[\frac{\pi}{4}\left(0.02^2\right)\right]\left[200\left(10^9\right)\right]}$$

$$= 0.017947\text{ m} = 17.9\text{ mm} \downarrow$$ **Ans.**

Ans:
$\Delta_C = 17.9$ mm

14–118. Bar ABC has a rectangular cross section of 300 mm by 100 mm. Attached rod DB has a diameter of 20 mm. If both members are made of A-36 steel, determine the slope at A due to the loading. Consider only the effect of bending in ABC and axial force in DB.

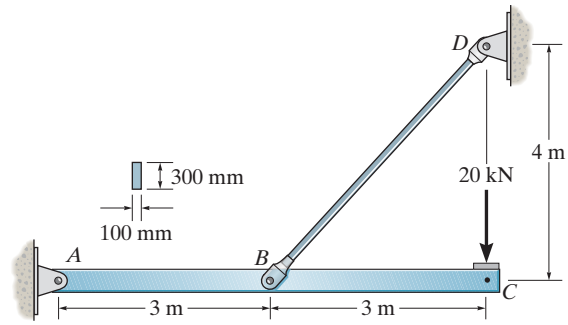

Real Moment Function $M(x)$: As shown in Figure a.

Virtual Moment Functions $m_\theta(x)$: As shown in Figure b.

Virtual Work Equation: For the slope at point A,

$$1 \cdot \theta = \int_0^L \frac{m_\theta M}{EI}\,dx + \frac{nNL}{AE}$$

$$1\ \text{kN}\cdot\text{m}\cdot\theta_A = \frac{1}{EI}\int_0^{3\,\text{m}} (1 - 0.3333x)(20.0x)dx + \frac{(-0.41667)(50.0)(5)}{AE}$$

$$\theta_A = \frac{30.0\ \text{kN}\cdot\text{m}^2}{EI} - \frac{104.167\ \text{kN}}{AE}$$

$$= \frac{30.0(1000)}{200\left(10^9\right)\left[\frac{1}{12}(0.1)\left(0.3^3\right)\right]} - \frac{104.167(1000)}{\left[\frac{\pi}{4}\left(0.02^2\right)\right]\left[200\left(10^9\right)\right]}$$

$$= -0.991\left(10^{-3}\right)\ \text{rad} = 0.991\left(10^{-3}\right)\ \text{rad}$$ **Ans.**

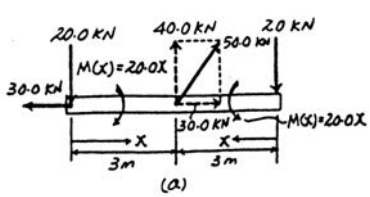

(a)

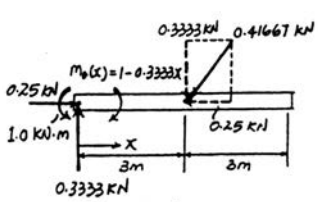

(b)

Ans:
$\theta_A = 0.991(10^{-3})$ rad

14–119. The L-shaped frame is made from two segments, each of length L and flexural stiffness EI. If it is subjected to the uniform distributed load, determine the horizontal displacement of the end C.

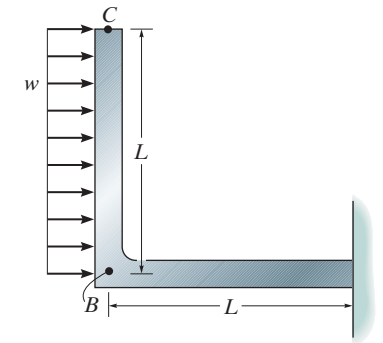

$$1 \cdot \Delta_{C_v} = \int_0^L \frac{mM}{EI} dx$$

$$\Delta_{C_v} = \frac{1}{EI}\left[\int_0^L (1x_1)\left(\frac{wx_1^2}{2}\right)dx_1 + \int_0^L (1L)\left(\frac{wL^2}{2}\right)dx_2\right]$$

$$= \frac{5wL^4}{8EI}$$ **Ans.**

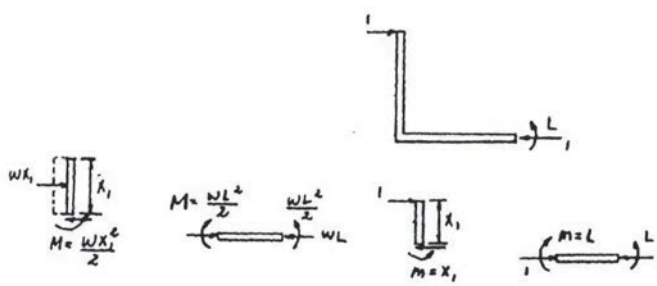

Ans:

$$\Delta_C = \frac{5wL^4}{8EI}$$

***14–120.** The L-shaped frame is made from two segments, each of length L and flexural stiffness EI. If it is subjected to the uniform distributed load, determine the vertical displacement of point B.

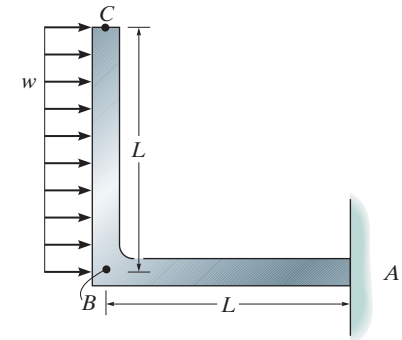

$$1 \cdot \Delta_{B_v} = \int_0^L \frac{mM}{EI}\,dx$$

$$\Delta_{B_v} = \frac{1}{EI}\left[\int_0^L (0)\left(\frac{wx_1^2}{2}\right)dx_1 + \int_0^L (L - x_2)\left(\frac{wL^2}{2}\right)dx_2\right]$$

$$= \frac{wL^4}{4EI}$$ **Ans.**

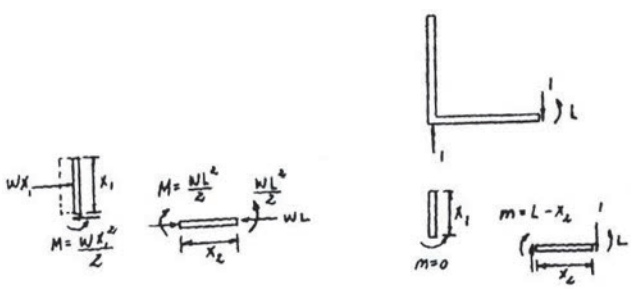

14–121. Determine the displacement at C. EI is constant.

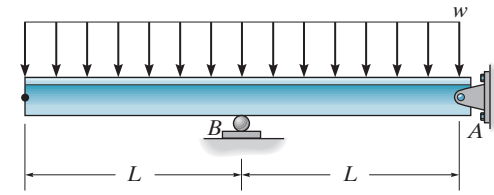

$$\Delta_C = \int_0^L \frac{mM}{EI}dx$$

$$= 2\int_0^L \frac{(-1x)(\frac{-wx^2}{2})}{EI}dx$$

$$= 2\frac{w}{2EI}\left(\frac{L^4}{4}\right) = \frac{wL^4}{4EI}$$ **Ans.**

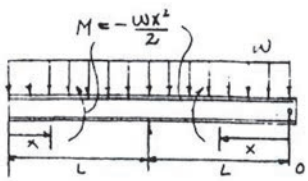

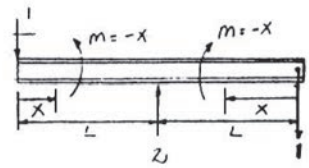

Ans:

$$\Delta_C = \frac{wL^4}{4EI}$$

14–122. Determine the slope at B. EI is constant.

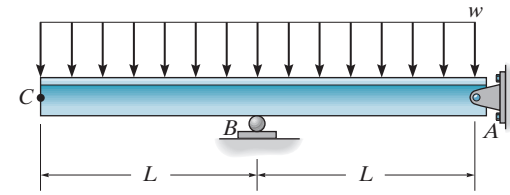

$$\theta_B = \int_0^L \frac{m_\theta M}{EI} dx$$

$$= \int_0^L \frac{\left(\frac{x}{L}\right)\left(\frac{-wx^2}{2}\right)}{EI} dx$$

$$= \frac{wL^4}{8LEI} = \frac{wL^3}{8EI}$$ **Ans.**

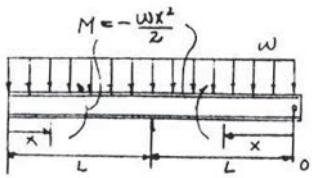

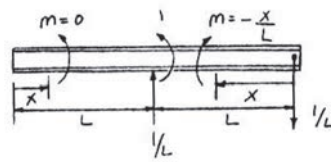

Ans:

$$\theta_B = \frac{wL^3}{8EI}$$

14–123. Solve Prob. 14–73 using Castigliano's theorem.

$$\Delta_{Bh} = \Sigma N\left(\frac{\partial N}{\partial P}\right)\frac{L}{AE} = \frac{-360(1)(3)(12)}{2(29)(10^6)} + 0 = -0.223(10^{-3})\text{ in.}$$

$$= 0.223(10^{-3})\text{ in.} \leftarrow$$ **Ans.**

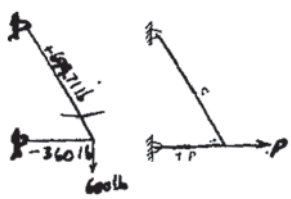

Ans:

$(\Delta_B)_h = 0.223(10^{-3})\text{ in.} \leftarrow$

***14–124.** Solve Prob. 14–74 using Castigliano's theorem.

$$\Delta_{B_v} = \Sigma N\left(\frac{\partial N}{\partial P}\right)\frac{L}{AE} = \frac{699.71(1.166)(5.831)(12)}{2(29)(10^6)} + \frac{-360(-0.6)(3)(12)}{2(29)(10^6)}$$

$$= 0.00112 \text{ in.} \downarrow$$ **Ans.**

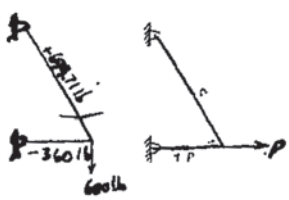

14–125. Solve Prob. 14–75 using Castigliano's theorem.

$$1 \cdot \Delta_{B_v} = \Sigma \frac{nNL}{AE}$$

$$\Delta_{B_v} = \frac{1}{AE}\{(-1.667)(-0.8333)(10) + (1.667)(0.8333)(10) + (0.6667)(1.333)(8) + (-0.6667)(-1.333)(8) + (-1)(0.5)(6) + (-0.5)(-3)(6)\}(12)$$

$$= \frac{576}{1.5\,(29)(10^3)} = 0.0132 \text{ in.}$$ **Ans.**

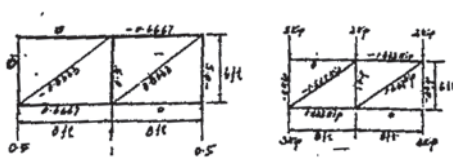

Ans:
$(\Delta_B)_v = 0.0132$ in.↓

14–126. Solve Prob. 14–76 using Castigliano's theorem.

$$1 \cdot \Delta_{E_v} = \Sigma \frac{nNL}{AE}$$

$$\Delta_{E_v} = \frac{1}{AE}[(-1.667)(-0.833)(10) + (1.667)(0.8333)(10) + (0.667)(1.33)(8) + (-0.667)(-1.33)(8) + (-1)(-0.5)(6) + (-0.5)(-3)(6)](12)$$

$$= \frac{648}{1.5\,(29)(10^3)} = 0.0149 \text{ in.}$$ **Ans.**

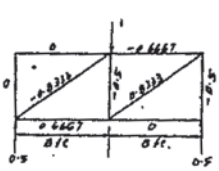

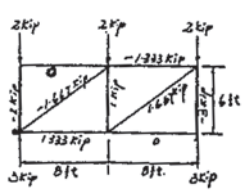

Ans:
$(\Delta_E)_v = 0.0149$ in.

14–127. Solve Prob. 14–77 using Castigliano's theorem.

Member Forces *N*: Member forces due to external force **P** and external applied forces are shown on the figure.

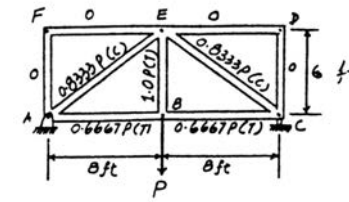

Castigliano's Second Theorem:

Member	N	$\frac{\partial N}{\partial P}$	$N(P = 5\text{ kip})$	L	$N\left(\frac{\partial N}{\partial P}\right)L$
AB	$0.6667P$	0.6667	3.333	96	213.33
BC	$0.6667P$	0.6667	3.333	96	213.33
CD	0	0	0	72	0
DE	0	0	0	96	0
EF	0	0	0	96	0
AF	0	0	0	72	0
AE	$-0.8333P$	-0.8333	-4.167	120	416.67
CE	$-0.8333P$	-0.8333	-4.167	120	416.67
BE	$1.00P$	1.00	5.00	72	360.00
					$\Sigma 1620\text{ kip}\cdot\text{in}$

$$\Delta = \sum N\left(\frac{\partial N}{\partial P}\right)\frac{L}{AE}$$

$$(\Delta_B)_v = \frac{1620\text{ kip}\cdot\text{in.}}{AE}$$

$$= \frac{1620}{4.5\left[29.0\left(10^3\right)\right]} = 0.0124\text{ in.}\downarrow \qquad \textbf{Ans.}$$

Ans:
$(\Delta_B)_v = 0.0124\text{ in.}\downarrow$

***14–128.** Solve Prob. 14–78 using Castigliano's theorem.

Member Forces *N*: Member forces due to external force **P** and external applied forces are shown on the figure.

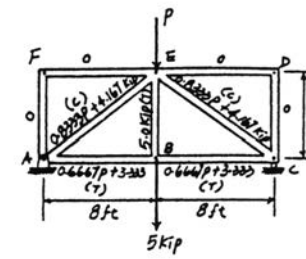

Castigliano's Second Theorem:

Member	N	$\frac{\partial N}{\partial P}$	$N(P=0)$	L	$N\left(\frac{\partial N}{\partial P}\right)L$
AB	$0.6667P+3.333$	0.6667	3.333	96	213.33
BC	$0.6667P+3.333$	0.6667	3.333	96	213.33
CD	0	0	0	72	0
DE	0	0	0	96	0
EF	0	0	0	96	0
AF	0	0	0	72	0
AE	$-(0.8333P+4.167)$	-0.8333	-4.167	120	416.67
CE	$-(0.8333P+4.167)$	-0.8333	-4.167	120	416.67
BE	5.0	0	5.00	72	0
					$\Sigma 1260$ kip · in

$$\Delta = \sum N\left(\frac{\partial N}{\partial P}\right)\frac{L}{AE}$$

$$(\Delta_E)_v = \frac{1260 \text{ kip}\cdot\text{in.}}{AE}$$

$$= \frac{1260}{4.5\left[29.0\left(10^3\right)\right]} = 0.00966 \text{ in.} \downarrow \qquad \textbf{Ans.}$$

14–129. Solve Prob. 14–81 using Castigliano's theorem.

Member	N	$\partial N/\partial P$	$N(P = 15)$	L	$N(\partial N/\partial P)L$
AB	$-(2 - 1.333P)$	1.333	18	48	1152
AC	P	1.0	15	36	540
BC	$-1.6667P$	-1.6667	-25	60	2500
CD	0	0	0	0	0
					$\Sigma = 4192$

$$\Delta_{C_h} = \Sigma N\left(\frac{\partial N}{\partial P}\right)\frac{L}{AE} = \frac{4192}{3(29)(10^3)} = 0.0482 \text{ in.}$$ **Ans.**

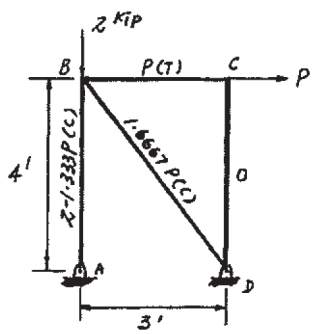

Ans:
$(\Delta_C)_v = 0.0482$ in.

14–130. Solve Prob. 14–82 using Castigliano's theorem.

Member	N	$\partial N/\partial P$	$N(P = 15)$	L	$N(\partial N/\partial P)L$
AB	$1.333P + 18$	1.333	18	48	1152
AC	15	0	15	36	0
BC	$-(1.667P + 25)$	-1.6667	-25	60	2500
CD	0	0	0	0	0
					$\Sigma = 3652$

$$\Delta_{B_h} = \Sigma N\left(\frac{\partial N}{\partial P}\right)\frac{L}{AE} = \frac{3652}{AE} = \frac{3652}{(3)(29)(10^3)} = 0.0420 \text{ in.}$$ **Ans.**

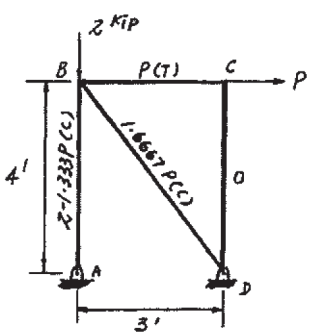

Ans:
$(\Delta_B)_h = 0.0420$ in.

14–131. Solve Prob. 14–85 using Castigliano's theorem.

Member	N	$\partial N/\partial P$	$N(P = 30)$	L	$N(\partial N/\partial P)L$
AB	$1.50P$	1.50	45.00	3.0	202.50
AD	$5\sqrt{13}$	0	$5\sqrt{13}$	$\sqrt{13}$	0
BD	-20	0	-20	2.0	0
BC	$1.5P$	1.5	45.00	3.0	202.50
CD	$-0.5\sqrt{13}P$	$-0.5\sqrt{13}$	$-15\sqrt{13}$	$\sqrt{13}$	351.54
DE	$-(0.5\sqrt{13}P + 5\sqrt{13})$	$-0.5\sqrt{13}$	$-20\sqrt{13}$	$\sqrt{13}$	468.72

$$\Sigma = 1225.26$$

$$\Delta_{C_v} = \Sigma N\left(\frac{\partial N}{\partial P}\right)\frac{L}{AE} = \frac{1225.26(10^3)}{300(10^{-6})(200)(10^9)}$$

$$= 0\ .02.04 \text{ m} = 20.4 \text{ mm}$$ **Ans.**

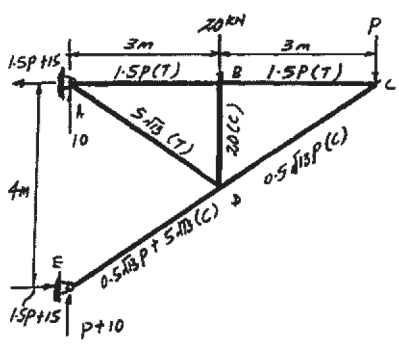

Ans:
$(\Delta_C)_v = 20.4$ mm

***14–132.** Solve Prob. 14–86 using Castigliano's theorem.

Member	N	$\partial N/\partial P$	$N(P=0)$	L	$N(\partial N/\partial P)L$
AB	45	0	45	3	0
AD	$0.25\sqrt{13}P + 5\sqrt{13}$	$0.25\sqrt{13}$	$5\sqrt{13}$	$\sqrt{13}$	58.59
BC	45	0	45	3	0
BD	-20	0	-20	2	0
CD	$-15\sqrt{13}$	0	$-15\sqrt{13}$	$\sqrt{13}$	0
DE	$-(0.25\sqrt{13}P + 20\sqrt{13})$	$-0.25\sqrt{13}$	$-20\sqrt{13}$	$\sqrt{13}$	234.36
					$\Sigma = 292.95$

$$\Delta_{D_v} = \Sigma N\left(\frac{\partial N}{\partial P}\right)\frac{L}{AE} = \frac{292.95}{AE} = \frac{292.95(10^3)}{300(10^{-6})(200)(10^9)}$$

$$= 4.88(10^{-3})\text{ m} = 4.88\text{ mm}$$ **Ans.**

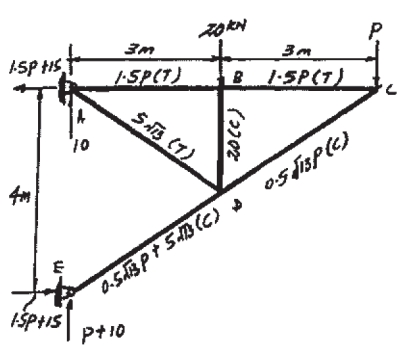

14–133. Solve Prob. 14–90 using Castigliano's theorem.

Set $M' = 0$

$$\theta_C = \int_0^L M\left(\frac{\partial M}{\partial M'}\right)\frac{dx}{EI}$$

$$= \int_0^a \frac{(Px_1)(\frac{1}{a}x_1)dx_1}{EI} + \int_0^a \frac{(Px_2)(1)dx_2}{EI}$$

$$= \frac{Pa^2}{3EI} + \frac{Pa^2}{2EI} = \frac{5Pa^2}{6EI}$$ **Ans.**

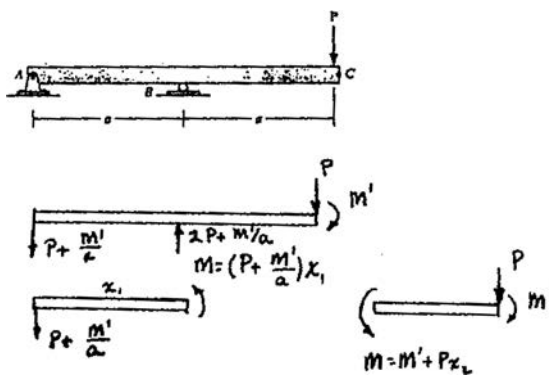

Ans:

$$\theta_C = -\frac{5Pa^2}{6EI}$$

14–134. Solve Prob. 14–91 using Castigliano's theorem.

$$\frac{\partial M_1}{\partial M'} = 1 - \frac{x_1}{a} \qquad \frac{\partial M_2}{\partial M'} = 0$$

Set $M' = 0$

$$M_1 = -Px_1 \qquad M_2 = Px_2$$

$$\theta_A = \int_0^L M\left(\frac{\partial M}{\partial M'}\right)\frac{dx}{EI} = \frac{1}{EI}\left[\int_0^a (-Px_1)\left(1 - \frac{x_1}{a}\right)dx_1 + \int_0^a (Px_2)(0)dx_2\right] = \frac{-Pa^2}{6EI}$$

$$= \frac{Pa^2}{6EI}$$ **Ans.**

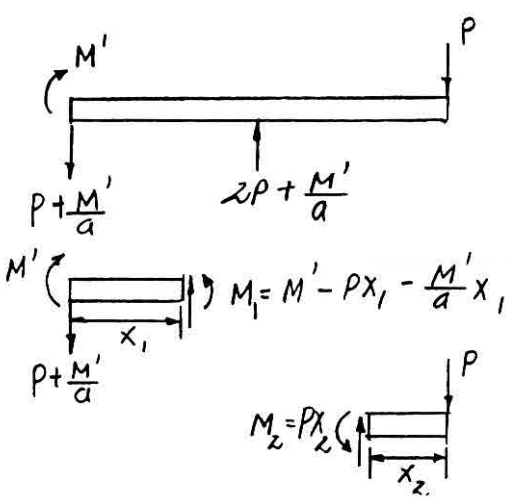

Ans:

$$\theta_A = \frac{Pa^2}{6EI}$$

14–135. Solve Prob. 14–92 using Castigliano's theorem.

$$\frac{\partial M_1}{\partial M'} = 0 \qquad \frac{\partial M_2}{\partial M'} = 1 - 0.1x_2$$

Set $M' = 0$

$$M_1 = 8x_1 \qquad M_2 = 4x_2$$

$$\theta_B = \int_0^L M\left(\frac{\partial M}{\partial M'}\right)\frac{dx}{EI}$$

$$= \frac{1}{EI}\left[\int_0^5 (8x_1)(0)dx_1 + \int_0^{10}(4x_2)(1 - 0.1x_2)dx_2\right]$$

$$= \frac{66.67 \text{ kip}\cdot\text{ft}^2}{EI} = \frac{66.67(12^2)}{29(10^3)(53.8)} = 6.15(10^{-3}) \text{ rad}$$

$\Delta_C = \theta_B(5)(12) = 6.15(10^{-3})(60) = 0.369$ in. **Ans.**

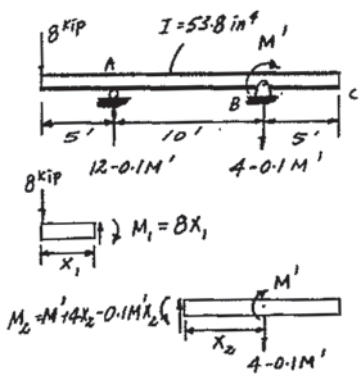

Ans:
$\Delta_C = 0.369$ in.

***14–136.** Solve Prob. 14–93 using Castigliano's theorem.

$$\frac{\partial M_1}{\partial M'} = 0 \qquad \frac{\partial M_2}{\partial M'} = 1 - 0.1\,x_2$$

Set $M' = 0$

$$M_1 = 8x_1 \qquad M_2 = 4x_2$$

$$\theta_B = \int_0^L M\left(\frac{\partial M}{\partial M'}\right)\frac{dx}{EI}$$

$$= \frac{1}{EI}\left[\int_0^5 (8x_1)(0)dx_1 + \int_0^{10}(4x_2)(1 - 0.1x_2)dx_2\right] = \frac{66.67\ \text{kip}\cdot\text{ft}^2}{EI}$$

$$= \frac{66.67(12)^2}{(29)(10^3)(53.8)} = 6.15(10^{-3})\ \text{rad} = 0.353^\circ \qquad \textbf{Ans.}$$

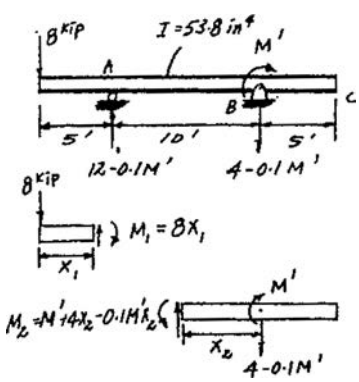

14–137. Solve Prob. 14–95 using Castigliano's theorem.

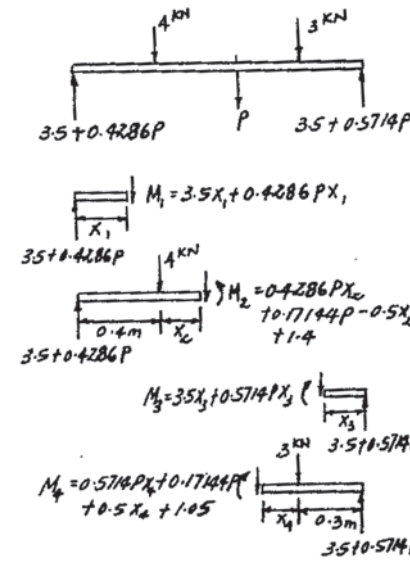

$$\frac{\partial M_1}{\partial P} = 0.4286x_1 \qquad \frac{\partial M_2}{\partial P} = 0.4286x_2 + 0.17144$$

$$\frac{\partial M_3}{\partial P} = 0.5714x_3 \qquad \frac{\partial M_4}{\partial P} = 0.5714x_4 + 0.17144$$

Set $P = 2$ kN

$$M_1 = 4.3572x_1 \qquad M_2 = 0.3572x_2 + 1.7429$$

$$M_3 = 4.6428x_3 \qquad M_4 = 1.6428x_4 + 1.3929$$

$$\Delta_B = \int_0^L M\left(\frac{\partial M}{\partial P}\right)\frac{dx}{EI}$$

$$= \frac{1}{EI}\left[\int_0^{0.4}(4.3572x_1)(0.4286x_1)\,dx_1 + \int_0^{0.4}(0.3572x_2 + 1.7429)(0.4286x_2 + 0.17144)dx_2 + \int_0^{0.3}(4.6428x_3)(0.5714x_3)dx_3 + \int_0^{0.3}(1.6428x_4 + 1.3929)(0.5714x_4 + 0.17144)dx_4\right]$$

$$= \frac{0.37944\ \text{kN}\cdot\text{m}^3}{EI} = \frac{0.37944(10^3)}{200(10^9)\frac{\pi}{4}(0.015)^4} = 0.0478\ \text{m} = 47.8\ \text{mm} \qquad \textbf{Ans.}$$

Ans:
$\Delta_B = 47.8$ mm

14–138. Solve Prob. 14–96 using Castigliano's theorem.

$$\frac{\partial M_1}{\partial P} = 0 \qquad \frac{\partial M_2}{\partial P} = -0.5x_2$$

Set $P = 0$

$$M_1 = 18 \qquad M_2 = 18$$

$$\Delta_D = \int_0^L M\left(\frac{\partial M}{\partial P}\right)\frac{dx}{EI}$$

$$= (2)\frac{1}{EI}\left[\int_0^4 (18)(0)dx_1 + \int_0^3 (18)(-0.5x_2)dx_2\right]$$

$$= \frac{81\ \text{kN}\cdot\text{m}^3}{EI} = \frac{81(10)^3}{200(10^9)(125)(10^{-6})} = 3.24(10^{-3})\ \text{m} = 3.24\ \text{mm} \qquad \textbf{Ans.}$$

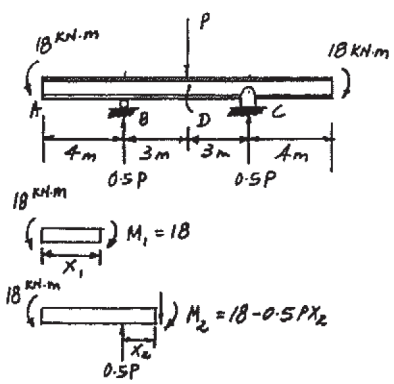

Ans:
$\Delta_D = 3.24$ mm

14–139. Solve Prob. 14–97 using Castigliano's theorem.

$$\frac{\partial M_1}{\partial M'} = 1 \qquad \frac{\partial M_2}{\partial M'} = 1 - 0.1667x_2 \qquad \frac{\partial M_3}{\partial M'} = 0$$

Set $M' = 18\ \text{kN}\cdot\text{m}$

$$M_1 = 18\ \text{kN}\cdot\text{m} \qquad M_2 = 18\ \text{kN}\cdot\text{m} \qquad M_3 = 18\ \text{kN}\cdot\text{m}$$

$$\theta_A = \int_0^L M\left(\frac{\partial M}{\partial M'}\right)\frac{dx}{EI} = \frac{1}{EI}\left[\int_0^4 (18)(1)dx_1 + \int_0^6 18(1 - 0.1667x_2)dx_2 + \int_0^4 (18)(0)dx_3\right]$$

$$= \frac{126\ \text{kN}\cdot\text{m}^2}{EI} = \frac{126(10^3)}{200(10^9)(125)(10^{-6})} = 5.04(10^{-3})\ \text{rad} = 0.289^\circ \qquad \textbf{Ans.}$$

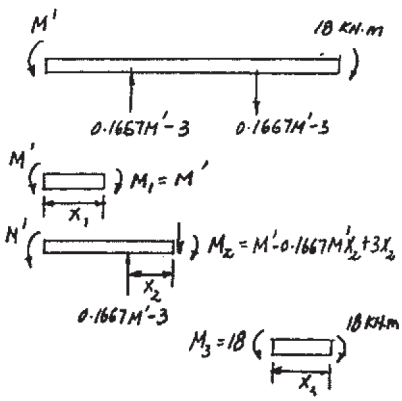

Ans:
$\theta_A = 0.289^\circ$

***14–140.** Solve Prob. 14–98 using Castigliano's theorem.

$$\theta_B = \int_0^L M\left(\frac{\partial M}{\partial M'}\right)\frac{dx}{EI} = \int_0^6 \frac{(-18)\left(-\frac{1}{6}x\right)dx(10^3)}{EI}$$

$$= \frac{18(6^2)(10^3)}{6(2)(200)(10^9)(125)(10^{-6})} = 0.00216 \text{ rad} \qquad \textbf{Ans.}$$

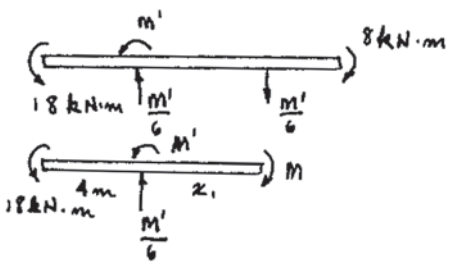

14–141. Solve Prob. 14–108 using Castigliano's theorem.

M' does not influence the moment within the overhang.

$$M = \frac{M'}{L}x - M' - \frac{wx^2}{2}$$

$$\frac{\partial M}{\partial M'} = \frac{x}{L} - 1$$

Setting $M' = 0$,

$$\theta_A = \int_0^L M\left(\frac{\partial M}{\partial M'}\right)\frac{dx}{EI} = \frac{1}{EI}\int_0^L\left(-\frac{wx^2}{2}\right)\left(\frac{x}{L} - 1\right)dx = \frac{-w}{2EI}\left[\frac{L^3}{4} - \frac{L^3}{3}\right]$$

$$= \frac{wL^3}{24\,EI}$$ **Ans.**

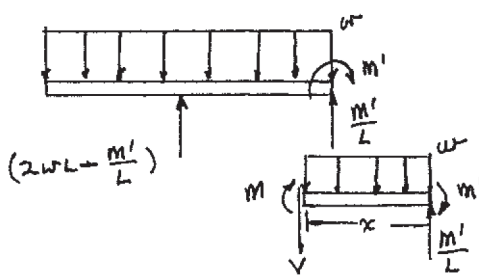

Ans:

$$\theta_A = \frac{wL^3}{24EI}$$

14–142. Solve Prob. 14–119 using Castigliano's theorem.

$$M_1 = Px_1 + \frac{wx_1^2}{2}$$

$$\frac{\partial M_1}{\partial P} = x_1 \qquad \frac{\partial M_2}{\partial P} = L$$

Setting $P = 0$

$$M_1 = \frac{wx_1^2}{2} \qquad M_2 = \frac{wL^2}{2}$$

$$\Delta_C = \int_0^L M\left(\frac{\partial M}{\partial P}\right)\frac{dx}{EI} = \frac{1}{EI}\left[\int_0^L \frac{wx_1^2}{2}(x_1)dx_1 + \int_0^L \frac{wL^2}{2}Ldx_2\right] = \frac{5wL^4}{8EI} \quad \textbf{Ans.}$$

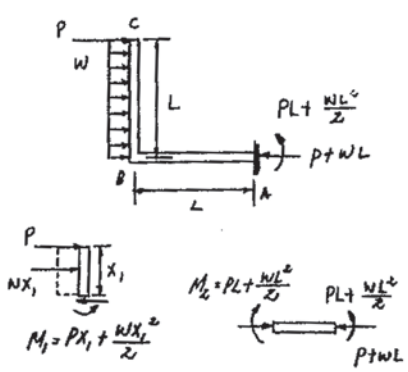

Ans:

$$\Delta_C = \frac{5wL^4}{8EI}$$

14–143. Solve Prob. 14–120 using Castigliano's theorem.

P does not influence moment within segment.

$$M = Px = \frac{wL^2}{2}$$

$$\frac{\partial M}{\partial P} = x$$

Set $P = 0$

$$\Delta_B = \int_0^L M\left(\frac{\partial M}{\partial P}\right)\frac{dx}{EI} = \int_0^L \left(-\frac{wL^2}{2}\right)(x)\frac{dx}{EI} = \frac{wL^4}{4EI}$$ **Ans.**

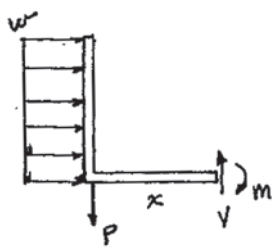

Ans:
$\Delta_B = \dfrac{wL^4}{4EI}$

***14–144.** Solve Prob. 14–121 using Castigliano's theorem.

$$M_1 = -\frac{wx_1^2}{2} - Px_1$$

$$\frac{\partial M_1}{\partial P} = -x_1$$

$$M_2 = -\frac{wx_2^2}{2} - Px_2$$

$$\frac{\partial M_2}{\partial P} = -x_2$$

Set $P = 0$.

$$\Delta_C = \int_0^L M\left(\frac{\partial M}{\partial P}\right)\frac{dx}{EI}$$

$$= 2\int_0^L -\frac{wx^2}{2}(-x)\frac{dx}{EI} = \frac{wL^4}{4EI}\downarrow \qquad \textbf{Ans.}$$

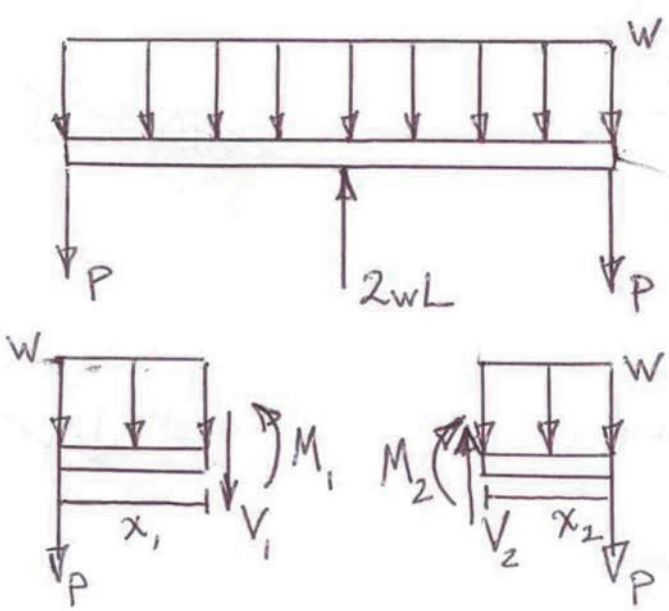

14–145. Solve Prob. 14–122 using Castigliano's theorem.

$$M_1 = -\frac{wx_1^2}{2}$$

$$\frac{\partial M_1}{\partial M'} = 0$$

$$M_2 = -\frac{M'}{L}x_2 - \frac{wx_2^2}{2}$$

$$\frac{\partial M_2}{\partial M'} = -\frac{x_2}{L}$$

Set $M' = 0$

$$\theta_B = \int_0^L M\left(\frac{\partial M}{\partial M'}\right)\frac{dx}{EI} = 0 + \int_0^L \left(\frac{-wx_2^2}{2}\right)\left(-\frac{x_2}{L}\right)\frac{dx}{EI} = \frac{wL^3}{8EI}$$ **Ans.**

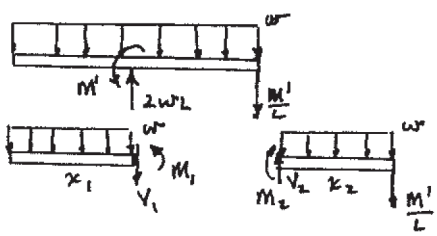

Ans:

$$\theta_B = \frac{wL^3}{8EI}$$

14–146. Determine the total axial and bending strain energy in the A992 steel beam. $A = 2300\ \text{mm}^2$, $I = 9.5(10^6)\ \text{mm}^4$.

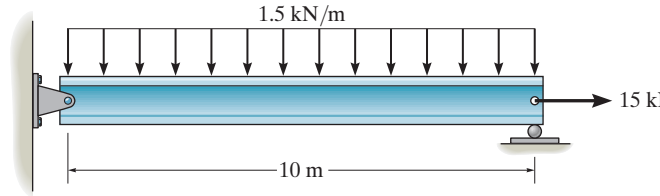

Axial Load:

$$(U_e)_i = \int_0^L \frac{N^2 dx}{2EA} = \frac{N^2 L}{2EA}$$

$$(U_e)_i = \frac{((15)(10^3))^2(10)}{2(200)(10^9)(2.3)(10^{-3})} = 2.4456\ \text{J}$$

Bending:

$$(U_b)_i = \int_0^L \frac{M^2 dx}{2EI} = \frac{1}{2EI}\int_0^{10} [(7.5)(10^3)x - 0.75(10^3)x^2]^2 dx$$

$$= \frac{1}{2EI}\int_0^{10} [56.25(10^6)x^2 + 562.5(10^3)x^4 - 11.25(10^6)x^3]\,dx$$

$$(U_b)_i = \frac{0.9375(10^9)}{200(10^9)(9.5)(10^{-6})} = 493.4210\ \text{J}$$

$$U_i = (U_a)_i + (U_b)_i = 2.4456 + 493.4210 = 496\ \text{J}$$ **Ans.**

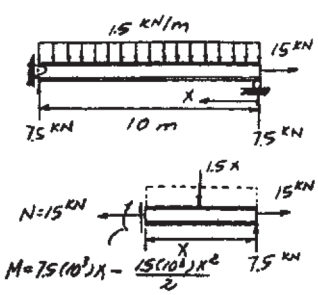

Ans:

$U_i = 496\ \text{J}$

14–147. The 200-kg block D is dropped from a height $h = 1$ m onto end C of the A992 steel W200 × 36 overhang beam. If the spring at B has a stiffness $k = 200$ kN/m, determine the maximum bending stress developed in the beam.

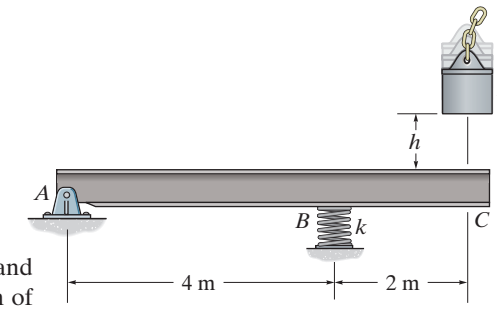

Equilibrium. The support reactions and the moment functions for regions AB and BC of the beam under static conditions are indicated on the free-body diagram of the beam, Fig. a,

$$U_e = U_i$$

$$\frac{1}{2} P\Delta_{st} = \Sigma \int_0^L \frac{M^2 dx}{2EI}$$

$$\frac{1}{2} P\Delta_{st} = \frac{1}{2EI}\left[\int_0^{4\text{ m}} \left(\frac{P}{2} x_2\right)^2 dx + \int_0^{2\text{ m}} (Px_1)^2\, dx\right]$$

$$\Delta_{st} = \frac{8P}{EI}$$

Here, $I = 34.4\left(10^6\right)\text{ mm}^4 = 34.4\left(10^{-6}\right)\text{ m}^4$ (see the appendix) and $E = E_{st} =$ 200 GPa. Then, the equivalent spring constant can be determined from

$$P = k_b\,\Delta_{st}$$

$$P = k_b\left(\frac{8P}{EI}\right)$$

$$k_b = \frac{EI}{8} = \frac{200\left(10^9\right)\left[34.4\left(10^{-6}\right)\right]}{8} = 860\left(10^3\right)\text{ N/m}$$

From the free-body diagram,

$$F_{sp} = \frac{3}{2} P$$

$$k_{sp}\Delta_{sp} = \frac{3}{2}\left(k_b\Delta_b\right)$$

$$\Delta_{sp} = \frac{3}{2}\left(\frac{k_b}{k_{sp}}\right)\Delta_b = \frac{3}{2}\left(\frac{860\left(10^3\right)}{200\left(10^3\right)}\right)\Delta_b = 6.45\,\Delta_b \qquad (1)$$

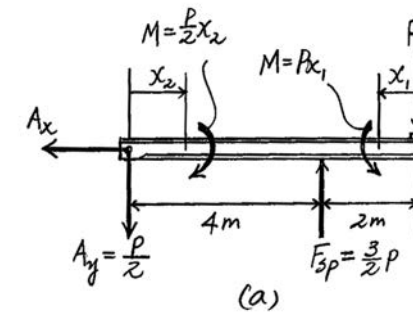

Conservation of Energy.

$$mg\left(h + \Delta_b + \frac{3}{2}\Delta_{sp}\right) = \frac{1}{2} k_{sp}\Delta_{sp}^2 + \frac{1}{2} k_b\Delta_b^2$$

14–147. Continued

Substiuting Eq. (1) into this equation.

$$200(9.81)\left[1 + \Delta_b + \frac{3}{2}(6.45\Delta_b)\right] = \frac{1}{2}\left[200\left(10^3\right)\right](6.45\Delta_b)^2 + \frac{1}{2}\left[860\left(10^3\right)\right]\Delta_b{}^2$$

$$4590.25\left(10^3\right)\Delta_b{}^2 - 20944.35\Delta_b - 1962 = 0$$

Solving for the positive root

$$\Delta_b = 0.02308 \text{ m}$$

Maximum Stress. The maximum force on the beam is $P_{\max} = k_b\Delta_b = 860\left(10^3\right)(0.02308) = 19.85\left(10^3\right)$ N. The maximum moment occurs at the supporting spring, where $M_{\max} = P_{\max}L = 19.85\left(10^3\right)(2) = 39.70\left(10^3\right)$ N · m. Applying the flexure formula with $c = \frac{d}{2} = \frac{0.201}{2} = 0.1005$ m.

$$\sigma_{\max} = \frac{M_{\max}c}{I} = \frac{39.70\left(10^3\right)(0.1005)}{34.4\left(10^{-6}\right)} = 115.98 \text{ MPa} = 116 \text{ MPa} \qquad \textbf{Ans.}$$

Since $\sigma_{\max} < \sigma_Y = 345$ MPa, this result is valid.

Ans:
$\sigma_{\max} = 116$ MPa

***14–148.** Determine the maximum height h from which the 200-kg block D can be dropped without causing the A992 steel W200 × 36 overhang beam to yield. The spring at B has a stiffness $k = 200$ kN/m.

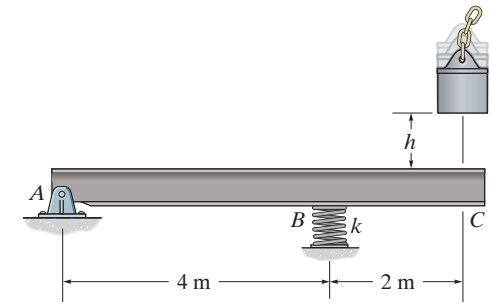

Equilibrium. The support reactions and the moment functions for regions AB and BC of the beam under static conditions are indicated on the free-body diagram of the beam, Fig. a,

$$U_e = U_i$$

$$\frac{1}{2}P\Delta_{st} = \Sigma\int_0^L \frac{M^2 dx}{2EI}$$

$$\frac{1}{2}P\Delta_{st} = \frac{1}{2EI}\left[\int_0^{4\text{ m}}\left(\frac{P}{2}x_2\right)^2 dx + \int_0^{2\text{ m}}(Px_1)^2\,dx\right]$$

$$\Delta_{st} = \frac{8P}{EI}$$

Here, $I = 34.4\left(10^6\right)\text{ mm}^4 = 34.4\left(10^{-6}\right)\text{ m}^4$ (see the appendix) and $E = E_{st} =$ 200 GPa. Then, the equivalent spring constant can be determined from

$$P = k_b\,\Delta_{st}$$

$$P = k_b\left(\frac{8P}{EI}\right)$$

$$k_b = \frac{EI}{8} = \frac{200\left(10^9\right)\left[34.4\left(10^{-6}\right)\right]}{8} = 860\left(10^3\right)\text{ N/m}$$

From the free-body diagram,

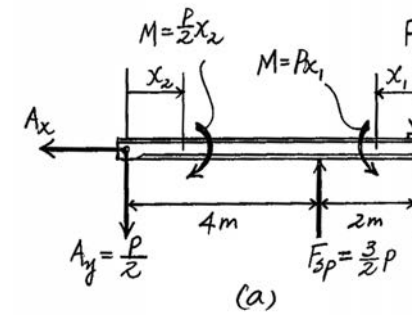

$$F_{sp} = \frac{3}{2}P$$

$$k_{sp}\Delta_{sp} = \frac{3}{2}(k_b\Delta_b)$$

$$\Delta_{sp} = \frac{3}{2}\left(\frac{k_b}{k_{sp}}\right)\Delta_b = \frac{3}{2}\left(\frac{860\left(10^3\right)}{200\left(10^3\right)}\right)\Delta_b = 6.45\Delta_b \qquad (1)$$

***14–148. Continued**

Maximum Stress. The maximum force on the beam is $P_{max} = k_b\Delta_b = 860\left(10^3\right)\Delta_b$. The maximum moment occurs at the supporting spring, where $M_{max} = P_{max}L = 860\left(10^3\right)\Delta_b(2) = 1720\left(10^3\right)\Delta_b$. Applying the flexure formula with $c = \frac{d}{2} = \frac{0.201}{2} = 0.1005$ m,

$$\sigma_{max} = \frac{M_{max}c}{I}$$

$$345\left(10^6\right) = \frac{1720\left(10^3\right)\Delta_b(0.1005)}{34.4\left(10^{-6}\right)}$$

$$\Delta_b = 0.06866 \text{ m}$$

Substituting this result into Eq. (1),

$$\Delta_{sp} = 0.44284 \text{ m}$$

Conservation of Energy.

$$mg\left(h + \Delta_b + \frac{3}{2}\Delta_{sp}\right) = \frac{1}{2}k_{sp}\Delta_{sp}^2 + \frac{1}{2}k_b\Delta_b^2$$

$$200(9.81)\left[h + 0.06866 + \frac{3}{2}(0.44284)\right] = \frac{1}{2}\left[200\left(10^3\right)\right](0.44284)^2 + \frac{1}{2}\left[860\left(10^3\right)\right](0.06866)^2$$

$$h = 10.3 \text{ m}$$ **Ans.**

14–149. The A992 steel bars are pin connected at B and C. If they each have a diameter of 30 mm, determine the slope at E.

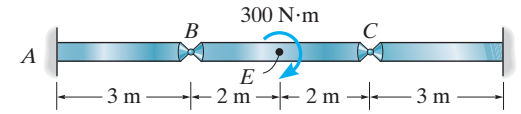

$$U_i = \int_0^L \frac{M^2 dx}{2EI} = (2)\frac{1}{2EI}\int_0^3 (75x_1)^2 dx_1 + (2)\frac{1}{2EI}\int_0^2 (-75x_2)^2 dx_2 = \frac{65625}{EI}$$

$$U_e = \frac{1}{2}(M')\theta = \frac{1}{2}(300)\theta_E = 150\theta_E$$

Conservation of Energy:

$$U_e = U_i$$

$$150\theta_E = \frac{65625}{EI}$$

$$\theta_E = \frac{473.5}{EI} = \frac{473.5}{(200)(10^9)(\frac{\pi}{4})(0.015^4)} = 0.0550 \text{ rad} = 3.15^\circ$$ **Ans.**

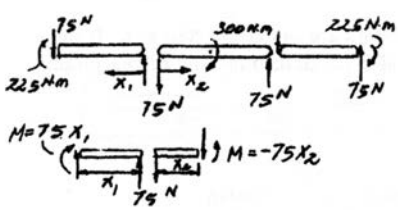

Ans:
$\theta_E = -3.15^\circ$

14–150. The steel chisel has a diameter of 0.5 in. and a length of 10 in. It is struck by a hammer that weighs 3 lb, and at the instant of impact it is moving at 12 ft/s. Determine the maximum compressive stress in the chisel, assuming that 80% of the impacting energy goes into the chisel. $E_{st} = 29(10^3)$ ksi, $\sigma_Y = 100$ ksi.

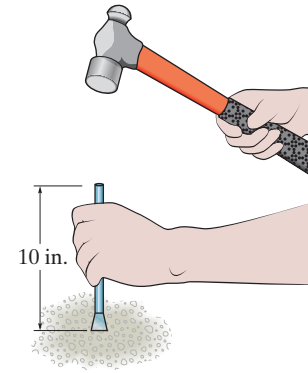

$$k = \frac{AE}{L} = \frac{\frac{\pi}{4}(0.5^2)(29)(10^3)}{10} = 569.41 \text{ kip/in.}$$

$$0.8U_e = U_i$$

$$0.8\left[\frac{1}{2}\left(\frac{3}{(32.2)(12)}\right)((12)(12))^2 + 3\Delta_{max}\right] = \frac{1}{2}(569.41)(10^3)\Delta_{max}^2$$

$$\Delta_{max} = 0.015044 \text{ in.}$$

$$P = k\Delta_{max} = 569.41(0.015044) = 8.566 \text{ kip}$$

$$\sigma_{max} = \frac{P_{max}}{A} = \frac{8.566}{\frac{\pi}{4}(0.5)^2} = 43.6 \text{ ksi} < \sigma_Y \quad \text{OK}$$ **Ans.**

Ans:
$\sigma_{max} = 43.6$ ksi

14–151. Determine the total axial and bending strain energy in the A992 structural steel W8 × 58 beam.

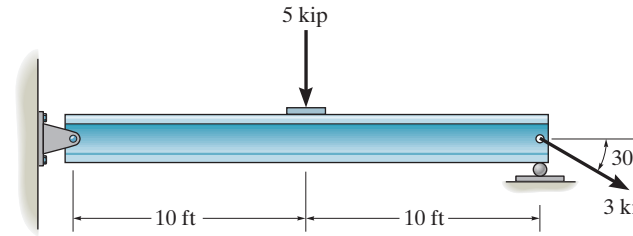

Axial Load:

$$(U_a)_i = \int_0^L \frac{N^2 dx}{2AE} = \frac{N^2 L}{2AE}$$

$$= \frac{[2.598]^2(20)(12)}{2(17.1)(29)(10^3)} = 1.6334(10^{-3})\ \text{in}\cdot\text{kip}$$

$$= 0.1361(10^{-3})\ \text{ft}\cdot\text{kip}$$

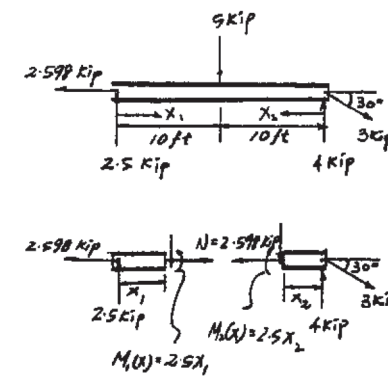

Bending:

$$(U_b)_i = \int_0^L \frac{M^2 dx}{2EI} = \frac{2}{2EI}\int_0^{120\ \text{in.}} (2.5x)^2 dx$$

$$= \frac{3.6(10^6)}{EI} = \frac{3.6(10^6)}{29(10^3)(228)}$$

$$= 0.54446\ \text{in.}\cdot\text{kip} = 0.04537\ \text{ft}\cdot\text{kip}$$

Total Strain Energy:

$$U_i = (U_a)_i + (U_b)_i$$

$$= 0.1361(10^{-3}) + 0.04537$$

$$= 0.0455\ \text{ft}\cdot\text{kip} = 45.5\ \text{ft}\cdot\text{lb}$$ **Ans.**

Ans:
$U_i = 45.5\,\text{ft}\cdot\text{lb}$

***14–152.** Determine the vertical displacement of joint C. The truss is made from A992 steel rods each having a diameter of 1 in.

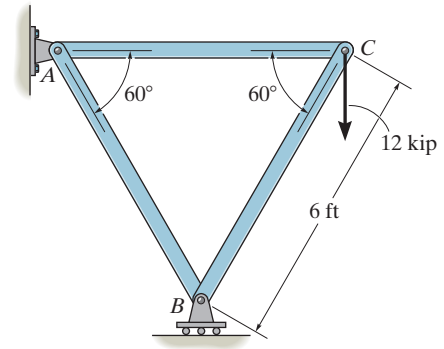

Members Real Force *N*. As indicated in Fig. *a*.

Members Virtual Force *n*. As indicated in Fig. *b*.

Virtual Work Equation. Since $\sigma_{\max} = \dfrac{F_{BC}}{A} = \dfrac{13.8564}{\frac{\pi}{4}(1^2)} = 17.64 \text{ ksi} < \sigma_Y = 50 \text{ ksi}$,

Member	n (kip)	N (kip)	L (in)	nNL (kip$^2 \cdot$ in)
AB	−1.1547	−13.8564	6(12)	1152
AC	0.57735	6.9282	6(12)	288
BC	−1.1547	−13.8564	6(12)	1152
				Σ 2592

Then

$$1 \cdot \Delta = \Sigma \frac{nNL}{AE}$$

$$1 \text{ kip} \cdot (\Delta_C)_v = \frac{2592}{\frac{\pi}{4}(1^2)[29(10^3)]}$$

$$(\Delta_C)_v = 0.1138 \text{ in.} = 0.114 \text{ in.} \downarrow$$ **Ans.**

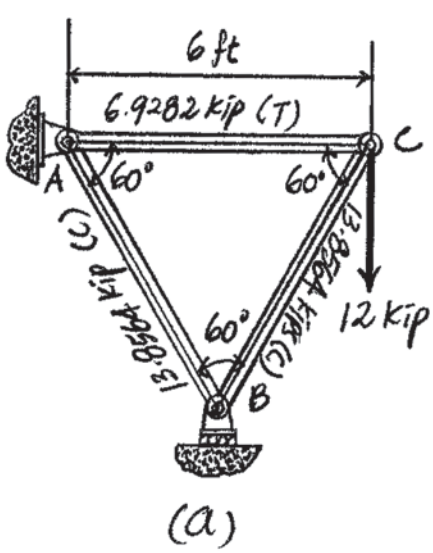

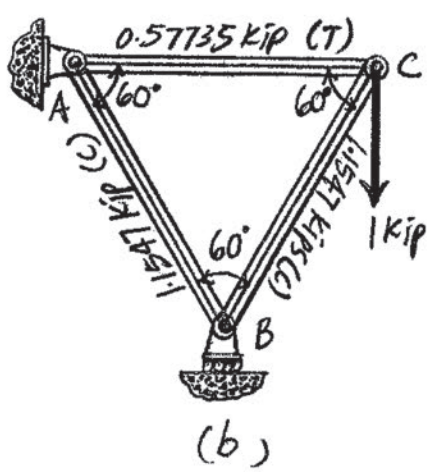

14–153. Determine the horizontal displacement of joint B. The truss is made from A992 steel rods each having a diameter of 1 in.

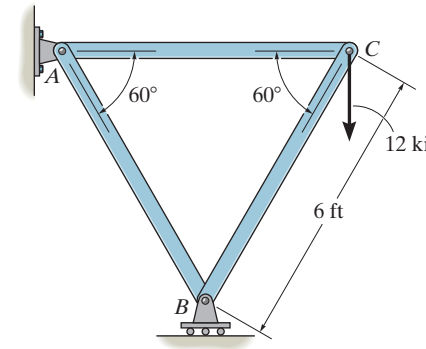

Members Real Force *N*. As indicated in Fig. *a*.

Members Virtual Force *n*. As indicated in Fig. *b*.

Virtual Work Equation. Since $\sigma_{\max} = \dfrac{F_{BC}}{A} = \dfrac{13.8564}{\frac{\pi}{4}(1^2)} = 17.64 \text{ ksi} < \sigma_Y = 50 \text{ ksi}$,

Member	n (kip)	N (kip)	L (in)	nNL (kip$^2 \cdot$ in)
AB	-2	-13.8564	6(12)	1995.32
AC	0	6.9282	6(12)	0
BC	0	-13.8564	6(12)	0
				Σ 1995.32

Then

$$1 \cdot \Delta = \Sigma \frac{nNL}{AE}$$

$$1 \text{ kip} \cdot (\Delta_B)_h = \frac{1995.32}{\frac{\pi}{4}(1^2)[29(10^3)]}$$

$$(\Delta_B)_h = 0.0876 \text{ in.} \leftarrow$$ **Ans.**

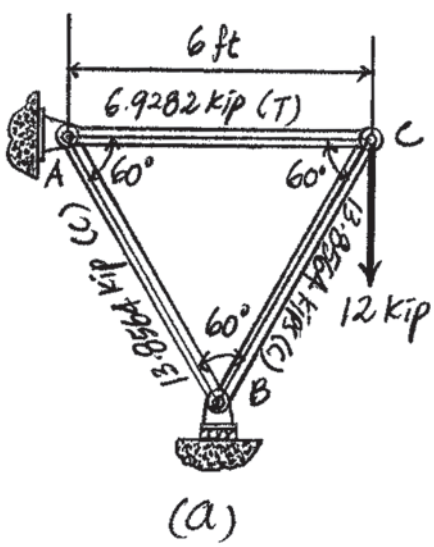

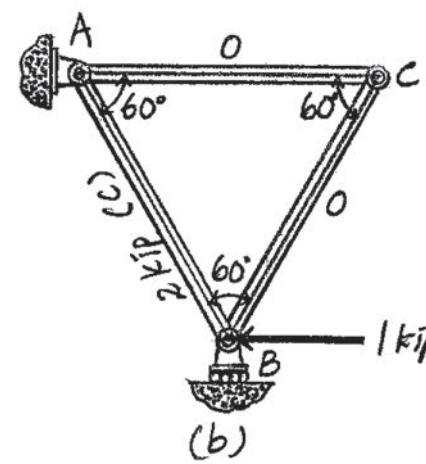

Ans:
$(\Delta_B)_h = 0.0876 \text{ in.} \leftarrow$

14–154. The cantilevered beam is subjected to a couple moment $\mathbf{M}_0$ applied at its end. Determine the slope of the beam at B. EI is constant. Use the method of virtual work.

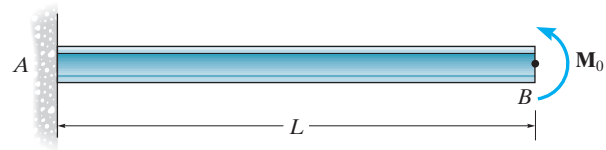

$$\theta_B = \int_0^L \frac{m_\theta M}{EI}\,dx = \int_0^L \frac{(1)\,M_0}{EI}\,dx$$

$$= \frac{M_0 L}{EI}$$ **Ans.**

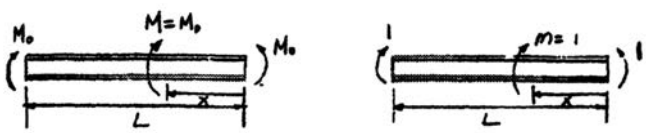

Ans:

$$\theta_B = \frac{M_0 L}{EI}$$

14–155. Solve Prob. 14–154 using Castigliano's theorem.

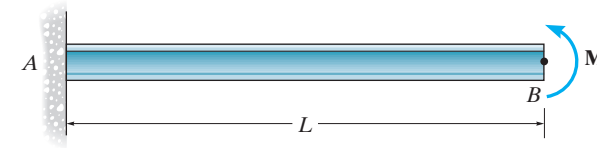

$$\theta_B = \int_0^L m\left(\frac{dm}{dm'}\right)\frac{dy}{EI} = \int_0^L \frac{M_0(1)}{EI}\,dx$$

$$= \frac{M_0 L}{EI}$$ **Ans.**

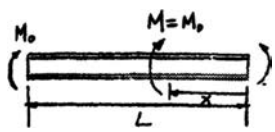

Ans:

$$\theta_B = \frac{M_0 L}{EI}$$

***14–156.** Determine the slope and displacement at point C. EI is constant.

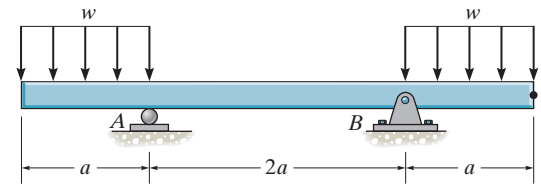

$$\theta_C = \int_0^L \frac{m_\theta M}{EI} dx$$

$$= \frac{1}{EI}\left[\int_0^a (0)\left(\frac{wx_1^2}{2}\right)dx_1 + \int_0^a (1)\left(\frac{wx_2^2}{2}\right)dx_2 + \int_0^{2a}\left(1 - \frac{x_3}{2a}\right)\left(\frac{wa^2}{2}\right)dx_3\right]$$

$$= \frac{2\,w\,a^3}{3\,E\,I}$$ **Ans.**

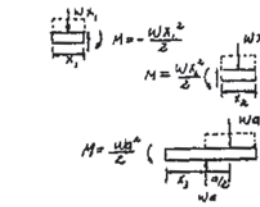

$$\Delta_C = \int_0^L \frac{m\,M}{EI} dx$$

$$= \frac{1}{EI}\left[\int_0^a (0)\left(\frac{wx_1^2}{2}\right)dx_1 + \int_0^a (x_2)\left(\frac{wx_2^2}{2}\right)dx_2 + \int_0^{2a}\left(a - \frac{x_3}{2}\right)\left(\frac{wa^2}{2}\right)dx_3\right]$$

$$= \frac{5\,w\,a^4}{8\,E\,I}$$ **Ans.**

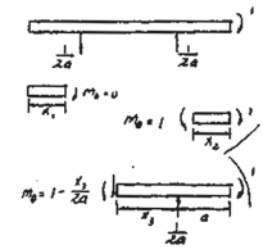

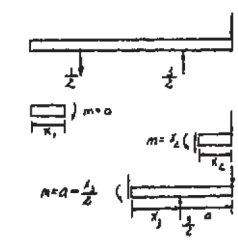

14–157. Determine the displacement at B. EI is constant.

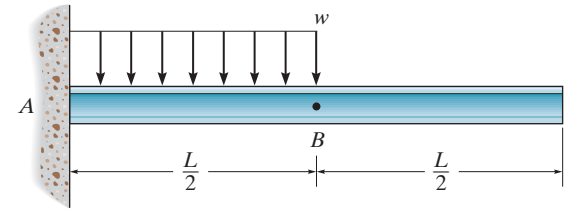

$$1 \cdot \Delta_B = \int_0^L \frac{m\,M}{E\,I}\,dx$$

$$\Delta_B = \int_0^{\frac{L}{2}} \frac{(-1\,x)\left(\frac{-w\,x^2}{2}\right)}{E\,I}\,dx = \frac{w\left(\frac{L}{2}\right)^4}{8E\,I}$$

$$= \frac{w\,L^4}{128\,E\,I}$$ **Ans.**

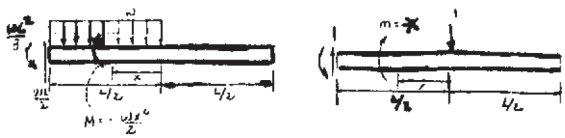

Ans:

$$\Delta_B = \frac{wL^4}{128\,EI}$$